Wideband 4 GHz, 43 dB Isolation at 1 GHz, CMOS 1.65 V to 2.75 V, 2:1 Mux/SPDT

ADG918/ADG919

FEATURES

Wideband switch: –3 dB @ 4 GHz
Absorptive/reflective switches
High off isolation (43 dB @ 1 GHz)
Low insertion loss (0.8 dB @1 GHz)
Single 1.65 V to 2.75 V power supply
CMOS/LVTTL control logic
8-lead MSOP and tiny 3 mm × 3 mm LFCSP packages
Low power consumption (<1 µA)

APPLICATIONS

Wireless communications
General-purpose RF switching
Dual-band applications
High speed filter selection
Digital transceiver front end switch
IF switching
Tuner modules
Antenna diversity switching

GENERAL DESCRIPTION

The ADG918/ADG919 are wideband switches using a CMOS process to provide high isolation and low insertion loss to 1 GHz. The ADG918 is an absorptive (matched) switch having 50 Ω terminated shunt legs, whereas the ADG919 is a reflective switch. These devices are designed such that the isolation is high over the dc to 1 GHz frequency range. They have on-board CMOS control logic, thus eliminating the need for external controlling circuitry. The control inputs are both CMOS and LVTTL compatible. The low power consumption of these CMOS devices makes them ideally suited to wireless and general-purpose high frequency switching applications.

FUNCTIONAL BLOCK DIAGRAMS

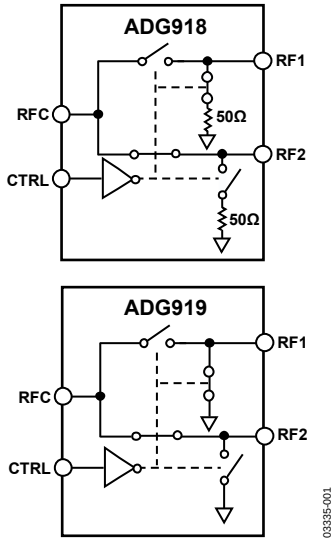

Figure 1.

PRODUCT HIGHLIGHTS

1. –43 dB off isolation @ 1 GHz.
2. 0.8 dB insertion loss @ 1 GHz.
3. Tiny 8-lead MSOP/LFCSP packages.

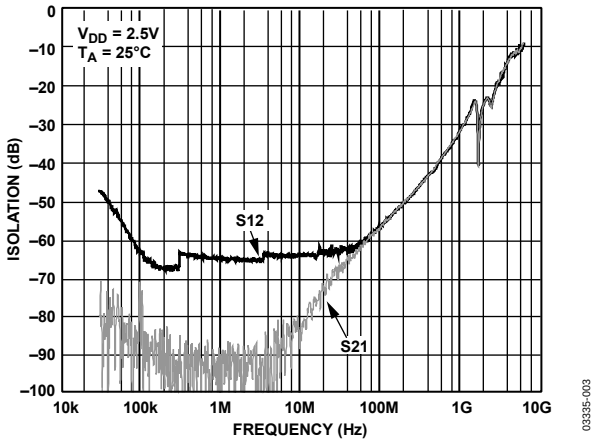

Figure 2. Off Isolation vs. Frequency

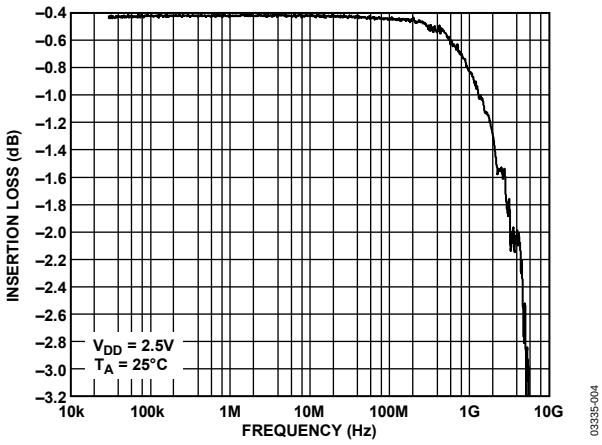

Figure 3. Insertion Loss vs. Frequency

Rev. C
Information furnished by Analog Devices is believed to be accurate and reliable. However, no responsibility is assumed by Analog Devices for its use, nor for any infringements of patents or other rights of third parties that may result from its use. Specifications subject to change without notice. No license is granted by implication or otherwise under any patent or patent rights of Analog Devices. Trademarks and registered trademarks are the property of their respective owners.

One Technology Way, P.O. Box 9106, Norwood, MA 02062-9106, U.S.A.
Tel: 781.329.4700 **www.analog.com**
Fax: 781.461.3113 **©2003–2008 Analog Devices, Inc. All rights reserved.**

TABLE OF CONTENTS

Features ... 1
Applications ... 1
Functional Block Diagrams ... 1
General Description ... 1
Product Highlights ... 1
Revision History ... 2
Specifications ... 3
Absolute Maximum Ratings ... 5
ESD Caution ... 5
Pin Configuration and Function Descriptions ... 6
Typical Performance Characteristics ... 7
Terminology ... 10
Test Circuits ... 11
Applications Information ... 13
Absorptive vs. Reflective Switch ... 13
Wireless Metering ... 13
Tuner Modules ... 13
Filter Selection ... 13
ADG9xx Evaluation Board ... 14
Outline Dimensions ... 15
Ordering Guide ... 16

REVISION HISTORY

9/08—Rev. B to Rev. C

Changes to Ordering Guide ... 16

8/08—Rev. A to Rev. B

Changes to Table 1, AC Electrical Characteristics, Third Order Intermodulation Intercept ... 3
Updated Outline Dimensions ... 15
Changes to Ordering Guide ... 16

9/04—Changed from Rev. 0 to Rev. A

Updated Format ... Universal
Change to Data Sheet Title ... 1
Change to Features ... 1
Change to Product Highlights ... 1
Changes to Specifications ... 3
Change to ADG9xx Evaluation Board section ... 13
Changes to Ordering Guide ... 14

8/03 Revision 0: Initial Version

SPECIFICATIONS

V_{DD} = 1.65 V to 2.75 V, GND = 0 V, input power = 0 dBm, all specifications T_{MIN} to T_{MAX}, unless otherwise noted. Temperature range for B Version: −40°C to +85°C.

Table 1.

Parameter	Symbol	Conditions	B Version Min	Typ[1]	Max	Unit
AC ELECTRICAL CHARACTERISTICS						
Operating Frequency[2]			dc		2	GHz
3 dB Frequency[3]					4	GHz
Input Power[3]		0 V dc bias			7	dBm
		0.5 V dc bias			16	dBm
Insertion Loss	S_{21}, S_{12}	DC to 100 MHz; V_{DD} = 2.5 V ± 10%		0.4	0.7	dB
		500 MHz; V_{DD} = 2.5 V ± 10%		0.5	0.8	dB
		1000 MHz; V_{DD} = 2.5 V ± 10%		0.8	1.25	dB
Isolation—RFC to RF1/RF2	S_{21}, S_{12}	100 MHz	57	60		dB
(CP Package)		500 MHz	46	49		dB
		1000 MHz	36	43		dB
Isolation—RFC to RF1/RF2	S_{21}, S_{12}	100 MHz	55	60		dB
(RM Package)		500 MHz	43	47		dB
		1000 MHz	34	37		dB
Isolation—RF1 to RF2 (Crosstalk)	S_{21}, S_{12}	100 MHz	55	58		
(CP Package)		500 MHz	41	44		
		1000 MHz	31	37		
Isolation—RF1 to RF2 (Crosstalk)	S_{21}, S_{12}	100 MHz	54	57		
(RM Package)		500 MHz	39	42		
		1000 MHz	31	33		
Return Loss (On Channel)[3]	S_{11}, S_{22}	DC to 100 MHz	21	27		dB
		500 MHz	22	27		dB
		1000 MHz	22	26		dB
Return Loss (Off Channel)[3]	S_{11}, S_{22}	DC to 100 MHz	18	23		dB
ADG918		500 MHz	17	21		dB
		1000 MHz	16	20		dB
On Switching Time[3]	t_{ON}	50% CTRL to 90% RF		6.6	10	ns
Off Switching Time[3]	t_{OFF}	50% CTRL to 10% RF		6.5	9.5	ns
Rise Time[3]	t_{RISE}	10% to 90% RF		6.1	9	ns
Fall Time[3]	t_{FALL}	90% to 10% RF		6.1	9	ns
1 dB Compression[3]	$P_{-1\ dB}$	1000 MHz		17		dBm
Third Order Intermodulation Intercept	IP_3	900 MHz/901 MHz, 4 dBm	28.5	36		dBm
Video Feedthrough[4]				2.5		mV p-p
DC ELECTRICAL CHARACTERISTICS						
Input High Voltage	V_{INH}	V_{DD} = 2.25 V to 2.75 V	1.7			V
	V_{INH}	V_{DD} = 1.65 V to 1.95 V	0.65 V_{CC}			V
Input Low Voltage	V_{INL}	V_{DD} = 2.25 V to 2.75 V			0.7	V
	V_{INL}	V_{DD} = 1.65 V to 1.95 V			0.35 V_{CC}	V
Input Leakage Current	I_I	0 V ≤ V_{IN} ≤ 2.75 V		± 0.1	± 1	µA

Parameter	Symbol	Conditions	B Version Min	Typ[1]	Max	Unit
CAPACITANCE[3]						
RF On Capacitance	C_{RF} ON	f = 1 MHz		1.6		pF
CTRL Input Capacitance	C_{CTRL}	f = 1 MHz		2		pF
POWER REQUIREMENTS						
V_{DD}			1.65		2.75	V
Quiescent Power Supply Current	I_{DD}	Digital inputs = 0 V or V_{DD}		0.1	1	µA

[1] Typical values are at V_{DD} = 2.5 V and 25°C, unless otherwise stated.
[2] Point at which insertion loss degrades by 1 dB.
[3] Guaranteed by design, not subject to production test.
[4] The dc transience at the output of any port of the switch when the control voltage is switched from high to low or low to high in a 50 Ω test setup, measured with 1 ns rise time pulses and 500 MHz bandwidth.

ABSOLUTE MAXIMUM RATINGS

T_A = 25°C, unless otherwise noted.

Table 2.

Parameter	Rating
V_{DD} to GND	−0.5 V to +4 V
Inputs to GND	−0.5 V to V_{DD} + 0.3 V[1]
Continuous Current	30 mA
Input Power	18 dBm
Operating Temperature Range	
Industrial (B Version)	−40°C to +85°C
Storage Temperature Range	−65°C to +150°C
Junction Temperature	150°C
MSOP Package	
θ_{JA} Thermal Impedance	206°C/W
LFCSP Package	
θ_{JA} Thermal Impedance (2-layer board)	84°C/W
θ_{JA} Thermal Impedance (4-layer board)	48°C/W
Lead Temperature, Soldering (10 sec)	300°C
IR Reflow, Peak Temperature (<20 sec)	235°C
ESD	1 kV

[1]RF1 and RF2 off port inputs to ground: −0.5 V to V_{DD} − 0.5 V.

Stresses above those listed under Absolute Maximum Ratings may cause permanent damage to the device. This is a stress rating only; functional operation of the device at these or any other conditions above those indicated in the operational section of this specification is not implied. Exposure to absolute maximum rating conditions for extended periods may affect device reliability.

ESD CAUTION

ESD (electrostatic discharge) sensitive device. Charged devices and circuit boards can discharge without detection. Although this product features patented or proprietary protection circuitry, damage may occur on devices subjected to high energy ESD. Therefore, proper ESD precautions should be taken to avoid performance degradation or loss of functionality.

PIN CONFIGURATION AND FUNCTION DESCRIPTIONS

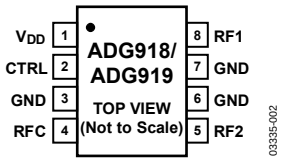

Figure 4. 8-Lead MSOP (RM-8) and 8-Lead 3 mm x 3 mm LFCSP (CP-8); Exposed Pad Tied to Substrate, GND

Table 3. Pin Function Descriptions

Pin No.	Mnemonic	Function
1	V_{DD}	Power Supply Input. These parts can be operated from 1.65 V to 2.75 V, and V_{DD} should be decoupled to GND.
2	CTRL	Logic Control Input. See Table 4.
3, 6, 7	GND	Ground Reference Point for All Circuitry on the Part.
4	RFC	COMMON RF Port for Switch.
5	RF2	RF2 Port.
8	RF1	RF1 Port.

Table 4. Truth Table

CTRL	Signal Path
0	RF2 to RFC
1	RF1 to RFC

TYPICAL PERFORMANCE CHARACTERISTICS

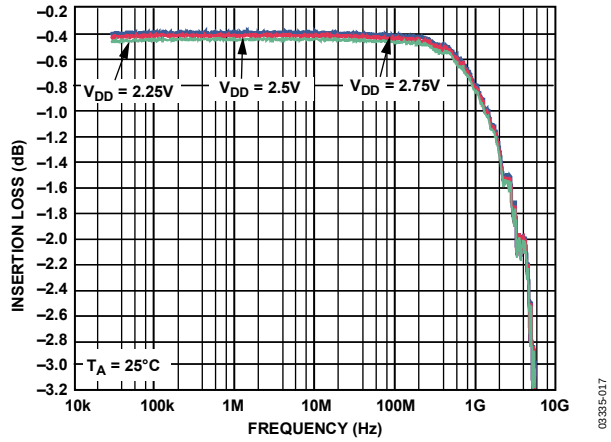

Figure 5. Insertion Loss vs. Frequency over Supplies (RF1/RF2, S12, and S21)

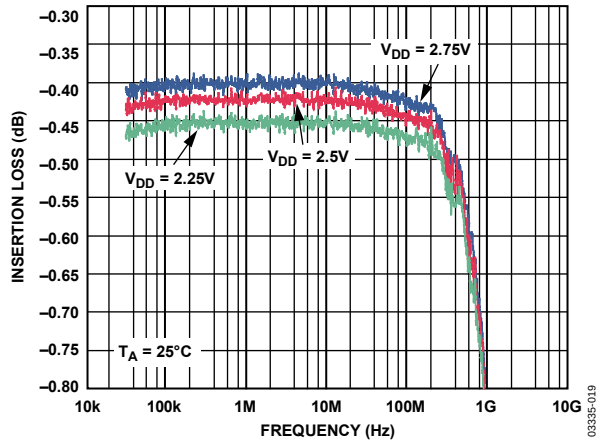

Figure 6. Insertion Loss vs. Frequency over Supplies (RF1/RF2, S12, and S21) (Zoomed Figure 5 Plot)

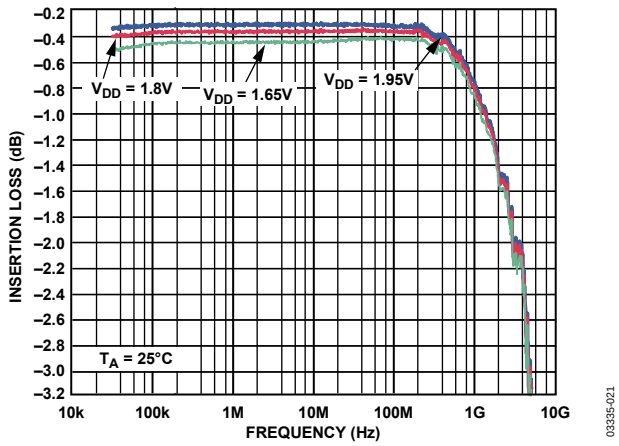

Figure 7. Insertion Loss vs. Frequency over Supplies (RF1/RF2, S12, and S21)

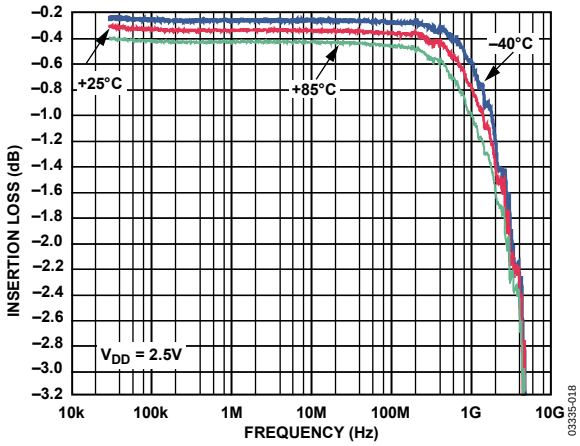

Figure 8. Insertion Loss vs. Frequency over Temperature (RF1/RF2, S12, and S21)

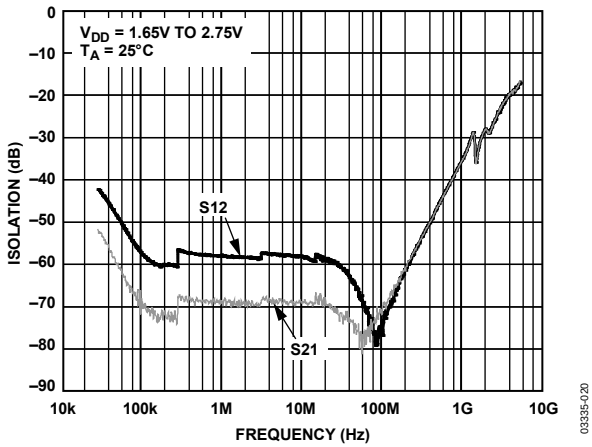

Figure 9. Isolation vs. Frequency over Supplies (RF1/RF2, ADG918)

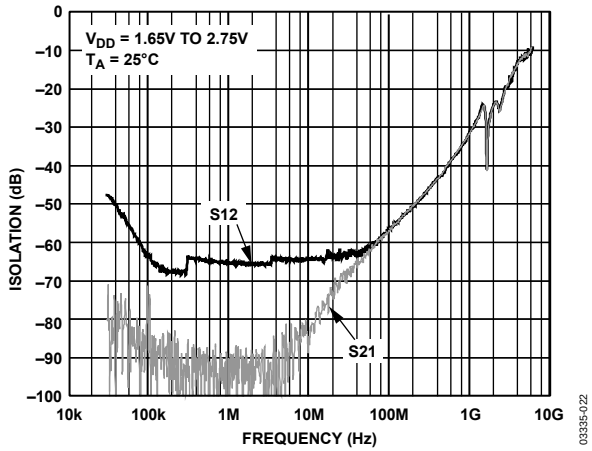

Figure 10. Isolation vs. Frequency over Supplies (RF1/RF2, ADG919)

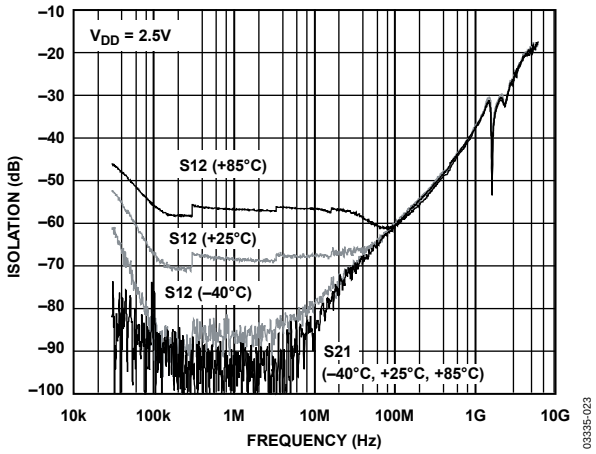

Figure 11. Isolation vs. Frequency over Temperature (RF1/RF2, ADG919)

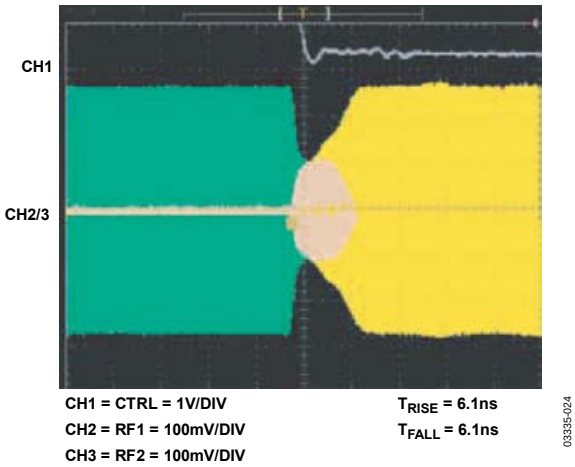

Figure 14. Switch Timing

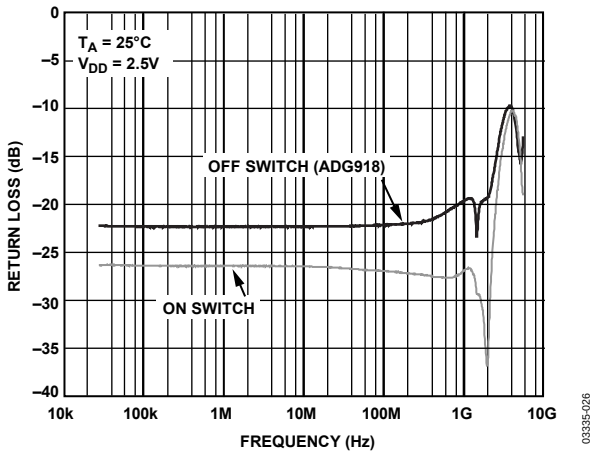

Figure 12. Return Loss vs. Frequency (RF1/RF2, S11)

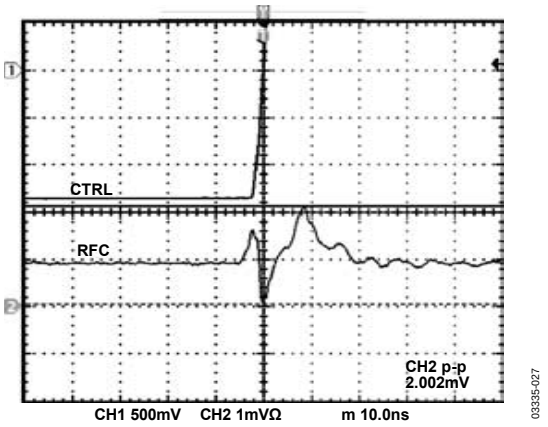

Figure 15. Video Feedthrough

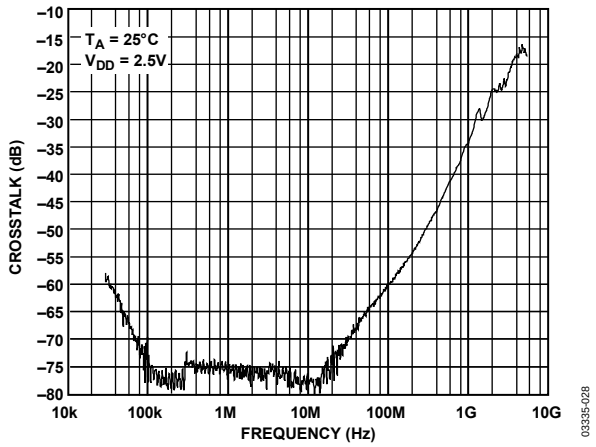

Figure 13. Crosstalk vs. Frequency (RF1/RF2, S12, S21)

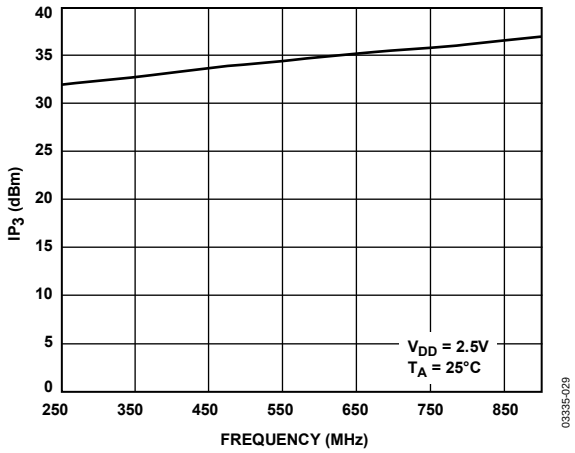

Figure 16. IP3 vs. Frequency

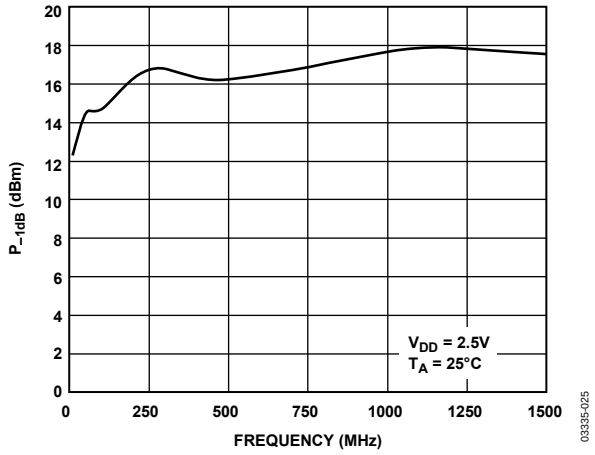

Figure 17. P-1 dB vs. Frequency

TERMINOLOGY

V_{DD}
Most positive power supply potential.

I_{DD}
Positive supply current.

GND
Ground (0 V) reference.

CTRL
Logic control input.

V_{INL}
Maximum input voltage for Logic 0.

V_{INH}
Minimum input voltage for Logic 1.

I_{INL} (I_{INH})
Input current of the digital input.

C_{IN}
Digital input capacitance.

t_{ON}
Delay between applying the digital control input and the output switching on.

t_{OFF}
Delay between applying the digital control input and the output switching off.

t_{RISE}
Rise time; time for the RF signal to rise from 10% to 90% of the on level.

t_{FALL}
Fall time; time for the RF signal to fall from 90% to 10% of the on level.

Off Isolation
The attenuation between the input and output ports of the switch when the switch control voltage is in the off condition.

Insertion Loss
The attenuation between the input and output ports of the switch when the switch control voltage is in the on condition.

$P_{-1\ dB}$
1 dB compression point. The RF input power level at which the switch insertion loss increases by 1 dB over its low level value. It is a measure of how much power the on switch can handle before the insertion loss increases by 1 dB.

IP_3
Third order intermodulation intercept. This is a measure of the power in false tones that occur when closely spaced tones are passed through a switch, whereby the nonlinearity of the switch causes these false tones to be generated.

Return Loss
The amount of reflected power relative to the incident power at a port. Large return loss indicates good matching. By measuring return loss, the VSWR (voltage standing wave ratio) can be calculated from conversion charts. VSWR indicates the degree of matching present at a switch RF port.

Video Feedthrough
Spurious signals present at the RF ports of the switch when the control voltage is switched from high to low or low to high without an RF signal present.

TEST CIRCUITS

Setups for the ADG918 are similar.

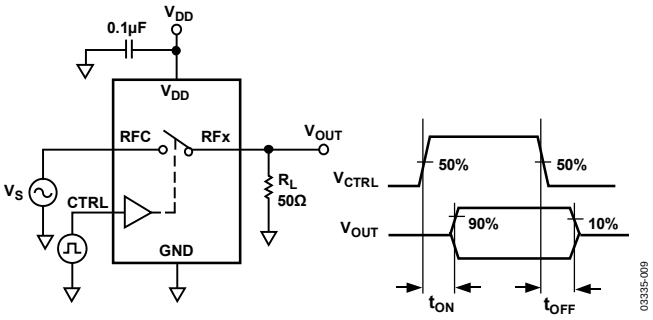

Figure 18. Switch Timing: t_{ON}, t_{OFF}

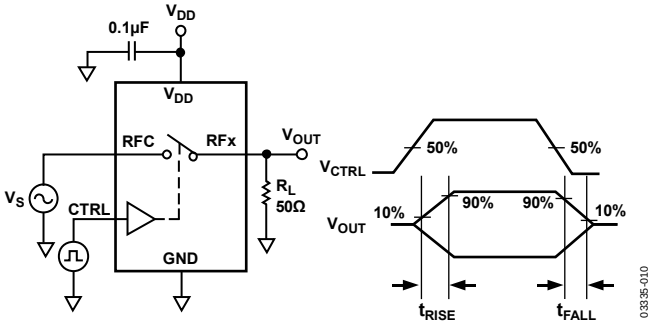

Figure 19. Switch

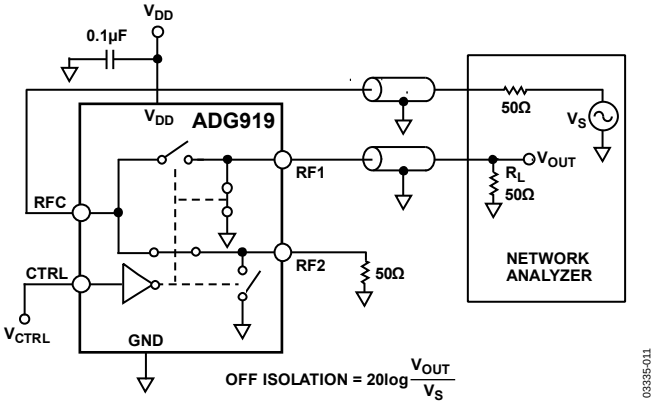

Figure 20. Off Isolation

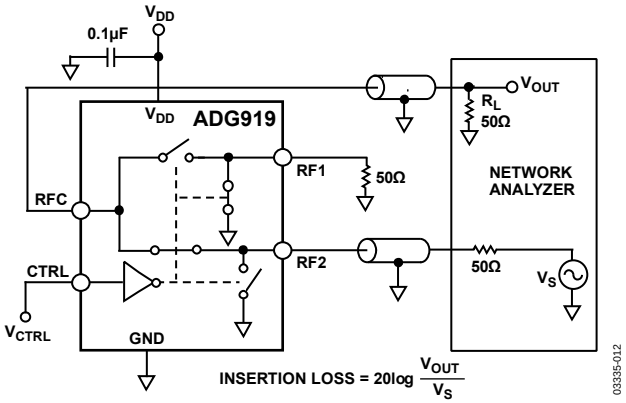

Figure 21. Insertion Loss

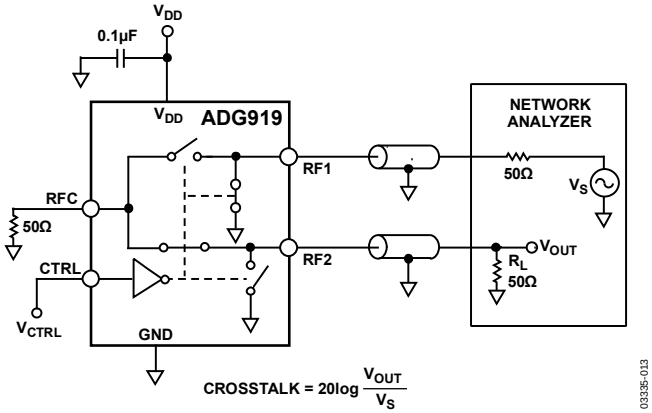

Figure 22. Crosstalk

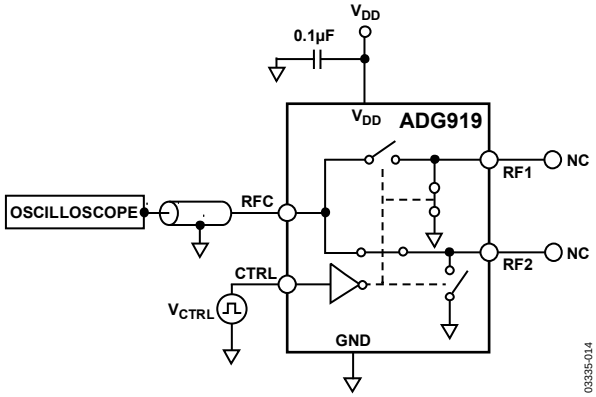

Figure 23. Video Feedthrough

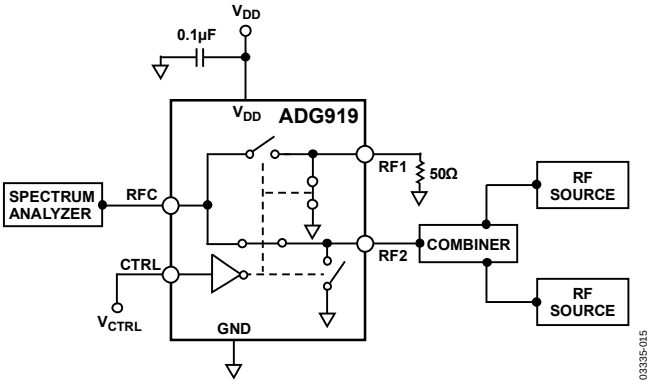

Figure 24. IP_3

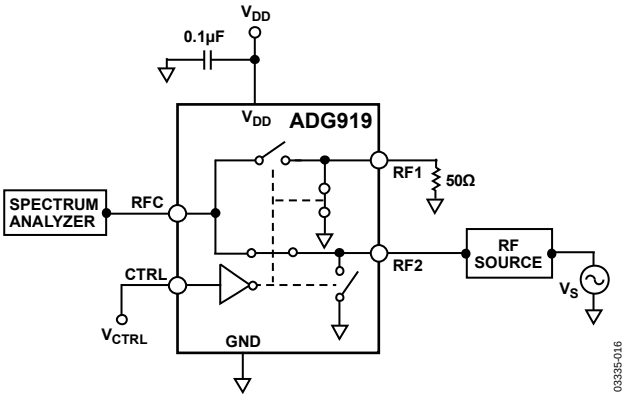

Figure 25. $P_{-1\ dB}$

APPLICATIONS INFORMATION

The ADG918/ADG919 are ideal solutions for low power, high frequency applications. The low insertion loss, high isolation between ports, low distortion, and low current consumption of these parts make them excellent solutions for many high frequency switching applications. The most obvious application is in a transmit/receive block, as shown in the wireless metering block diagram in Figure 26.

Other applications include switching between high frequency filters, an ASK generator, an FSK generator, and an antenna diversity switch in many tuner modules.

ABSORPTIVE VS. REFLECTIVE SWITCH

The ADG918 is an absorptive (matched) switch with 50 Ω terminated shunt legs, and the ADG919 is a reflective switch with 0 Ω terminated shunts to ground. The ADG918 absorptive switch has a good VSWR on each port, regardless of the switch mode. An absorptive switch should be used when there is a need for a good VSWR that is looking into the port but not passing the through signal to the common port. The ADG918 is therefore ideal for applications that require minimum reflections back to the RF source. It also ensures that the maximum power is transferred to the load.

The ADG919 reflective switch is suitable for applications where high off port VSWR does not matter and the switch has some other desired performance feature. It can be used in many applications, including high speed filter selection. In most cases, an absorptive switch can be used instead of a reflective switch, but not vice versa.

WIRELESS METERING

The ADG918 can be used in wireless metering applications. It can be used in conjunction with the ADF7020 transceiver IC for a utility metering transceiver application, providing the required isolation between the transmit and receive signals. The SPDT configuration isolates the high frequency receive signal from the high frequency transmit.

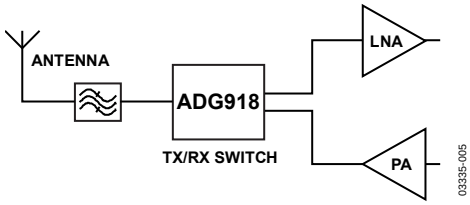

Figure 26. Wireless Metering

TUNER MODULES

The ADG918 can be used in a tuner module to switch between the cable TV input and the off-air antenna. This part is also ideal for use as an antenna diversity switch, switching different antenna to the tuner.

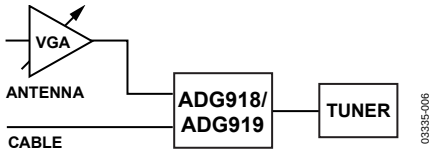

Figure 27. Tuner Modules

FILTER SELECTION

The ADG919 can be used as a 2:1 demultiplex to switch high frequency signals between different filters and also to multiplex the signal to the output.

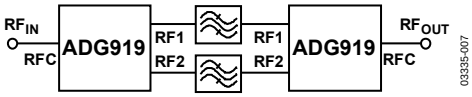

Figure 28. Filter Selection

ADG9xx EVALUATION BOARD

The ADG9xx evaluation board allows designers to evaluate the high performance wideband switches with a minimum of effort.

In addition to the evaluation board, the user requires only a power supply and a network analyzer. An application note is available with the evaluation board and gives complete information about operating the evaluation board.

The RFC port (see Figure 29) is connected through a 50 Ω transmission line to the top left SMA connector J1. RF1 and RF2 are connected through 50 Ω transmission lines to the top two SMA connectors, J2 and J3 respectively. A through transmission line connects J4 and J5 and is used to estimate the loss of the PCB over the environmental conditions being evaluated.

The board is constructed of a 4-layer, FR4 material with a dielectric constant of 4.3 and an overall thickness of 0.062 inches. Two ground layers with grounded planes provide ground for the RF transmission lines. The transmission lines were designed using a coplanar waveguide with ground plane model using a trace width of 0.052 inches, a clearance to ground plane of 0.030 inches, a dielectric thickness of 0.029 inches, and a metal thickness of 0.014 inches.

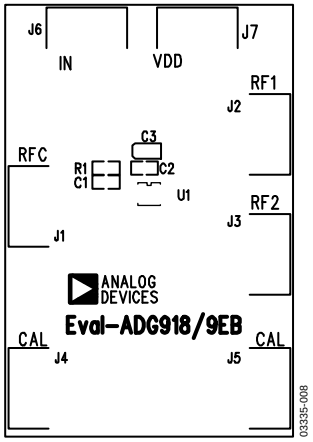

Figure 29. ADG9xx Evaluation Board Top View

OUTLINE DIMENSIONS

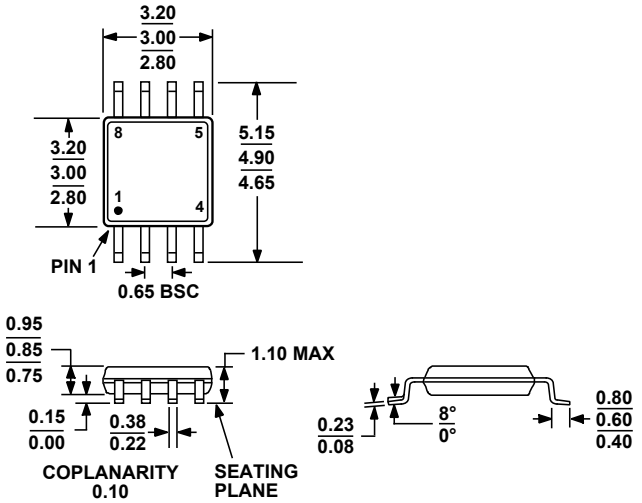

COMPLIANT TO JEDEC STANDARDS MO-187-AA

Figure 30. 8-Lead Mini Small Outline Package [MSOP]
(RM-8)
Dimensions shown in millimeters

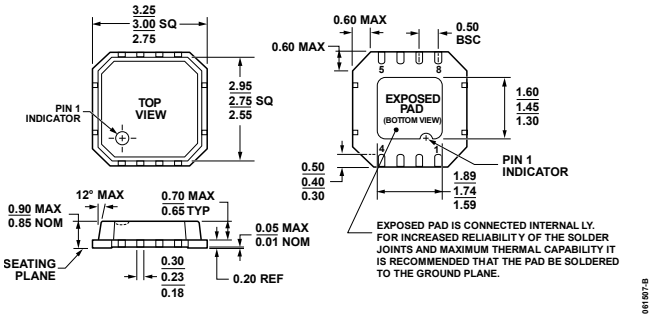

Figure 31. 8-Lead Lead Frame Chip Scale Package [LFCSP_VD]
3 mm x 3 mm Body, Very Thin, Dual Lead
(CP-8-2)
Dimensions shown in millimeters

ORDERING GUIDE

Model	Temperature Range	Package Description	Package Option	Branding
ADG918BRM	–40°C to +85°C	8-Lead Mini Small Outline Package (MSOP)	RM-8	W4B
ADG918BRM-500RL7	–40°C to +85°C	8-Lead Mini Small Outline Package (MSOP)	RM-8	W4B
ADG918BRM-REEL	–40°C to +85°C	8-Lead Mini Small Outline Package (MSOP)	RM-8	W4B
ADG918BRM-REEL7	–40°C to +85°C	8-Lead Mini Small Outline Package (MSOP)	RM-8	W4B
ADG918BRMZ[1]	–40°C to +85°C	8-Lead Mini Small Outline Package (MSOP)	RM-8	W4B#
ADG918BRMZ-500RL7[1]	–40°C to +85°C	8-Lead Mini Small Outline Package (MSOP)	RM-8	W4B#
ADG918BRMZ-REEL[1]	–40°C to +85°C	8-Lead Mini Small Outline Package (MSOP)	RM-8	W4B#
ADG918BRMZ-REEL7[1]	–40°C to +85°C	8-Lead Mini Small Outline Package (MSOP)	RM-8	W4B#
ADG918BCP-500RL7	–40°C to +85°C	8-Lead Lead Frame Chip Scale Package (LFCSP_VD)	CP-8-2	W4B
ADG918BCP-REEL7	–40°C to +85°C	8-Lead Lead Frame Chip Scale Package (LFCSP_VD)	CP-8-2	W4B
ADG918BCPZ-500RL7[1]	–40°C to +85°C	8-Lead Lead Frame Chip Scale Package (LFCSP_VD)	CP-8-2	W4B#
ADG918BCPZ-REEL7[1]	–40°C to +85°C	8-Lead Lead Frame Chip Scale Package (LFCSP_VD)	CP-8-2	W4B#
ADG919BRM	–40°C to +85°C	8-Lead Mini Small Outline Package (MSOP)	RM-8	W5B
ADG919BRM-500RL7	–40°C to +85°C	8-Lead Mini Small Outline Package (MSOP)	RM-8	W5B
ADG919BRM-REEL	–40°C to +85°C	8-Lead Mini Small Outline Package (MSOP)	RM-8	W5B
ADG919BRM-REEL7	–40°C to +85°C	8-Lead Mini Small Outline Package (MSOP)	RM-8	W5B
ADG919BRMZ[1]	–40°C to +85°C	8-Lead Mini Small Outline Package (MSOP)	RM-8	S1X
ADG919BRMZ-REEL[1]	–40°C to +85°C	8-Lead Mini Small Outline Package (MSOP)	RM-8	S1X
ADG919BRMZ-REEL7[1]	–40°C to +85°C	8-Lead Mini Small Outline Package (MSOP)	RM-8	S1X
ADG919BCP-500RL7	–40°C to +85°C	8-Lead Lead Frame Chip Scale Package (LFCSP_VD)	CP-8-2	W5B
ADG919BCP-REEL7	–40°C to +85°C	8-Lead Lead Frame Chip Scale Package (LFCSP_VD)	CP-8-2	W5B
ADG919BCPZ-REEL7[1]	–40°C to +85°C	8-Lead Lead Frame Chip Scale Package (LFCSP_VD)	CP-8-2	S1X
EVAL-ADG918EBZ[1]		Evaluation Board		
EVAL-ADG919EBZ[1]		Evaluation Board		

[1] Z = RoHS Compliant Part, # denotes RoHS compliant product, may be top or bottom marked.

©2003–2008 Analog Devices, Inc. All rights reserved. Trademarks and registered trademarks are the property of their respective owners.
D03335-0-9/08(C)

Мы молодая и активно развивающаяся компания в области поставок электронных компонентов. Мы поставляем электронные компоненты отечественного и импортного производства напрямую от производителей и с крупнейших складов мира.

Благодаря сотрудничеству с мировыми поставщиками мы осуществляем комплексные и плановые поставки широчайшего спектра электронных компонентов.

Собственная эффективная логистика и склад в обеспечивает надежную поставку продукции в точно указанные сроки по всей России.

Мы осуществляем техническую поддержку нашим клиентам и предпродажную проверку качества продукции. На все поставляемые продукты мы предоставляем гарантию .

Осуществляем поставки продукции под контролем ВП МО РФ на предприятия военно-промышленного комплекса России , а также работаем в рамках 275 ФЗ с открытием отдельных счетов в уполномоченном банке. Система менеджмента качества компании соответствует требованиям ГОСТ ISO 9001.

Минимальные сроки поставки, гибкие цены, неограниченный ассортимент и индивидуальный подход к клиентам являются основой для выстраивания долгосрочного и эффективного сотрудничества с предприятиями радиоэлектронной промышленности, предприятиями ВПК и научно-исследовательскими институтами России.

С нами вы становитесь еще успешнее!

Наши контакты:

Телефон: +7 812 627 14 35

Электронная почта: sales@st-electron.ru

Адрес: 198099, Санкт-Петербург, Промышленная ул, дом № 19, литера Н, помещение 100-Н Офис 331