Micropower, Dual and Quad, Single Supply, Precision Op Amps

FEATURES

- Available in 8-Pin SO Package
- 50µA Max Supply Current per Amplifier
- 70µV Max Offset Voltage
- 180µV Max Offset Voltage in 8-Pin SO
- 250pA Max Offset Current
- 0.6µV$_{P-P}$, 0.1Hz to 10Hz Voltage Noise
- 3pA$_{P-P}$, 0.1Hz to 10Hz Current Noise
- 0.4µV/°C Offset Voltage Drift
- 200kHz Gain Bandwidth Product
- 0.07V/µs Slew Rate
- Single Supply Operation
  - Input Voltage Range Includes Ground
  - Output Swings to Ground while Sinking Current
  - No Pull-Down Resistors Needed
- Output Sources and Sinks 5mA Load Current

APPLICATIONS

- Battery or Solar-Powered Systems
  - Portable Instrumentation
  - Remote Sensor Amplifier
  - Satellite Circuitry
- Micropower Sample-and-Hold
- Thermocouple Amplifier
- Micropower Filters

LT, LTC and LT are registered trademarks of Linear Technology Corporation.

DESCRIPTION

The LT®1078 is a micropower dual op amp in 8-pin packages including the small outline surface mount package. The LT1079 is a micropower quad op amp offered in the standard 14-pin packages. Both devices are optimized for single supply operation at 5V. ±15V specifications are also provided.

Micropower performance of competing devices is achieved at the expense of seriously degrading precision, noise, speed and output drive specifications. The design effort of the LT1078/LT1079 was concentrated on reducing supply current without sacrificing other parameters. The offset voltage achieved is the lowest on any dual or quad nonchopper stabilized op amp—micropower or otherwise. Offset current, voltage and current noise, slew rate and gain bandwidth product are all two to ten times better than on previous micropower op amps.

The 1/f corner of the voltage noise spectrum is at 0.7Hz, at least three times lower than on any monolithic op amp. This results in low frequency (0.1Hz to 10Hz) noise performance which can only be found on devices with an order of magnitude higher supply current.

Both the LT1078 and LT1079 can be operated from a single supply (as low as one lithium cell or two Ni-Cad batteries). The input range goes below ground. The all-NPN output stage swings to within a few millivolts of ground while sinking current—no power consuming pull down resistors are needed.

TYPICAL APPLICATION

Single Battery, Micropower, Gain = 100, Instrumentation Amplifier

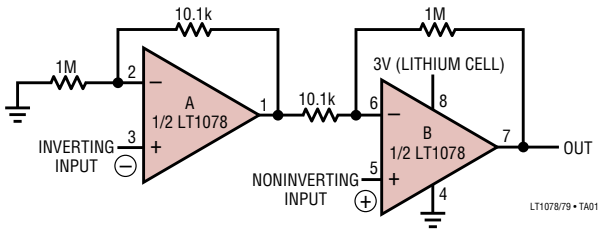

TYPICAL PERFORMANCE
INPUT OFFSET VOLTAGE = 40µV
INPUT OFFSET CURRENT = 0.2nA
TOTAL POWER DISSIPATION = 240µW
COMMON MODE REJECTION = 110dB (AMPLIFIER LIMITED)
GAIN BANDWIDTH PRODUCT = 200kHz

OUTPUT NOISE = 85µV$_{P-P}$ 0.1Hz TO 10Hz
= 300µV$_{RMS}$ OVER FULL BANDWIDTH
INPUT RANGE = 0.03V TO 1.8V
OUTPUT RANGE = 0.03V TO 2.3V
($0.3mV \le V_{IN}^+ - V_{IN}^- \le 23mV$)
OUTPUTS SINK CURRENT—NO PULL-DOWN RESISTORS ARE NEEDED

Distribution of Input Offset Voltage (LT1078 and LT1079 in H, J, N Packages)

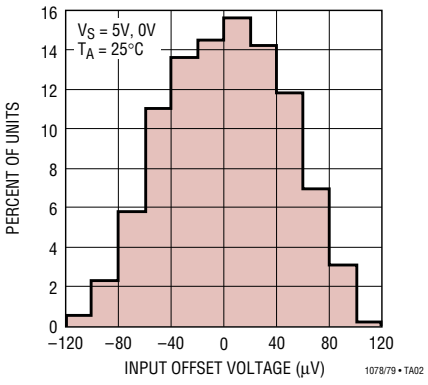

ABSOLUTE MAXIMUM RATINGS (Note 1)

Supply Voltage ..... ±22V
Differential Input Voltage ..... ±30V
Input Voltage ..... Equal to Positive Supply Voltage
..... 5V Below Negative Supply Voltage
Output Short-Circuit Duration ..... Indefinite
Storage Temperature Range
All Grades ..... –65°C to 150°C

Operating Temperature Range
LT1078AM/LT1078M/
LT1079AM/LT1079M **(OBSOLETE)** ..... –55°C to 125°C
LT1078I/LT1079I ..... –40°C to 85°C
LT1078AC/LT1078C/LT1078S8/
LT1079AC/LT1079C ..... 0°C to 70°C
Lead Temperature (Soldering, 10 sec) ..... 300°C

PACKAGE/ORDER INFORMATION

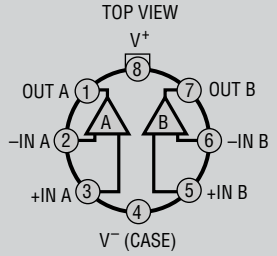

H PACKAGE
8-LEAD TO-5 METAL CAN

T_{JMAX} = 150°C, θ_{JA} = 150°C/W, θ_{JC} = 45°C/W

ORDER PART NUMBER

LT1078ACH
LT1078MH

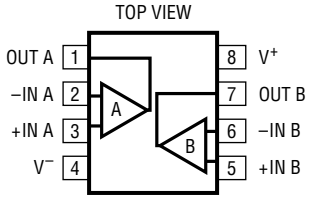

N8 PACKAGE
8-LEAD PDIP

T_{JMAX} = 100°C, θ_{JA} = 130°C/W (N8)

ORDER PART NUMBER

LT1078ACN8
LT1078CN8
LT1078IN8

J8 PACKAGE
8-LEAD PDIP

T_{JMAX} = 150°C, θ_{JA} = 100°C/W (J8)

LT1078AMJ8
LT1078MJ8

OBSOLETE PACKAGES
Consider the N8 and S8 Packages for Alternate Source

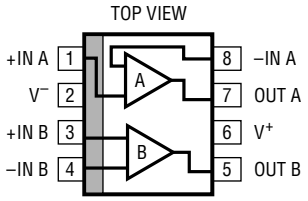

S8 PACKAGE
8-LEAD PLASTIC SO

NOTE: THIS PIN CONFIGURATION DIFFERS FROM THE 8-LEAD DIP PIN LOCATIONS. INSTEAD, IT FOLLOWS THE INDUSTRY STANDARD LT1013DS8 SO PACKAGE CONFIGURATION. FOR SIMILAR PERFORMANCE WITH TRADITIONAL DIP PINOUT, SEE THE LT2078

T_{JMAX} = 110°C, θ_{JA} = 220°C/W

ORDER PART NUMBER

LT1078IS8
LT1078S8

PART MARKING

1078

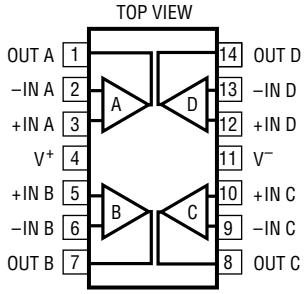

N PACKAGE
14-LEAD PDIP

T_{JMAX} = 110°C, θ_{JA} = 130°C/W (N)

ORDER PART NUMBER

LT1079ACN
LT1079CN
LT1079IN

J PACKAGE
14-LEAD CERAMIC DIP

T_{JMAX} = 150°C, θ_{JA} = 100°C/W (J)

LT1079MJ

OBSOLETE PACKAGE
Consider the N Packages for Alternate Source

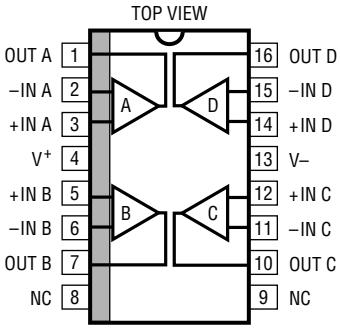

SW PACKAGE
16-LEAD PLASTIC SO WIDE

NOTE: FOR 14-PIN NARROW PACKAGE SEE THE LT2079

T_{JMAX} = 110°C, θ_{JA} = 150°C/W

ORDER PART NUMBER

LT1079ISW
LT1079SW

ELECTRICAL CHARACTERISTICS

V_S = 5V, 0V, V_{CM} = 0.1V, V_O = 1.4V, T_A = 25°C unless otherwise noted.

SYMBOL	PARAMETER	CONDITIONS (NOTE 2)	LT1078AC/LT1079AC LT1078AM/LT1079AM MIN	TYP	MAX	LT1078C/LT1079C LT1078I/LT1079I LT1078M/LT1079M LT1078S8/LT1079SW MIN	TYP	MAX	UNITS
V_{OS}	Input Offset Voltage	LT1078 LT1078IS8/LT1078S8 LT1079 LT1079ISW/LT1079SW		30 35 	70 100 		40 60 40 60	120 180 150 300	µV µV µV µV
$\frac{\Delta V_{OS}}{\Delta Time}$	Long Term Input Offset Voltage Stability			0.4			0.5		µV/Mo
I_{OS}	Input Offset Current			0.05	0.25		0.05	0.35	nA
I_B	Input Bias Current			6	8		6	10	nA
e_n	Input Noise Voltage	0.1Hz to 10Hz (Note 3)		0.6	1.2		0.6		μV_{P-P}
	Input Noise Voltage Density	f_O = 10Hz (Note 3) f_O = 1000Hz (Note 3)		29 28	45 37		29 28		$nV\sqrt{Hz}$ $nV\sqrt{Hz}$
i_n	Input Noise Current	0.1Hz to 10Hz (Note 3)		2.3	4.0		2.3		pA_{P-P}
	Input Noise Current Density	f_O = 10Hz (Note 3) f_O = 1000Hz		0.06 0.02	0.10		0.06 0.02		$pA\sqrt{Hz}$ $pA\sqrt{Hz}$
	Input Resistance Differential Mode Common Mode	(Note 4)	 400 	 800 6		 300 	 800 6		 MΩ GΩ
	Input Voltage Range		3.5 0	3.8 –0.3		3.5 0	3.8 –0.3		V V
CMRR	Common Mode Rejection Ratio	V_{CM} = 0V to 3.5V	97	110		94	108		dB
PSRR	Power Supply Rejection Ratio	V_S = 2.3V to 12V	102	114		100	114		dB
A_{VOL}	Large-Signal Voltage Gain	V_O = 0.03V to 4V, No Load V_O = 0.03V to 3.5V, R_L = 50k	200 150	1000 600		150 120	1000 600		V/mV V/mV
	Maximum Output Voltage Swing	Output Low, No Load Output Low, 2k to GND Output Low, I_{SINK} = 100µA		3.5 0.55 95	6 1.0 130		3.5 0.55 95	6 1.0 130	mV mV mV
		Output High, No Load Output High, 2k to GND	4.2 3.5	4.4 3.9		4.2 3.5	4.4 3.9		V V
SR	Slew Rate	A_V = 1, V_S = ±2.5V	0.04	0.07		0.04	0.07		V/µs
GBW	Gain Bandwidth Product	$f_O \leq$ 20kHz		200			200		kHz
I_S	Supply Current per Amplifier			38	50		39	55	µA
	Channel Separation	ΔV_{IN} = 3V, R_L = 10k		130			130		dB
	Minimum Supply Voltage	(Note 5)		2.2	2.3		2.2	2.3	V

ELECTRICAL CHARACTERISTICS

The ● denotes the specifications which apply over the temperature range $-40°C \le T_A \le 85°C$ for I grades, $-55°C \le T_A \le 125°C$ for AM/M grades. V_S = 5V, 0V, V_{CM} = 0.1V, V_O = 1.4V unless otherwise noted.

SYMBOL	PARAMETER	CONDITIONS		LT1078AM/LT1079AM MIN	TYP	MAX	LT1078I/LT1079I LT1078M/LT1079M MIN	TYP	MAX	UNITS
V_{OS}	Input Offset Voltage	LT1078 LT1078IS8/LT1079 LT1079ISW	● ● ●		70 80	250 280		95 100 100	370 400 560	µV µV µV
$\frac{\Delta V_{OS}}{\Delta T}$	Input Offset Voltage Drift (Note 6)	 LT1078IS8 LT1079ISW	● ● ●		0.4	1.8		0.5 0.6 0.7	2.5 3.5 4.0	µV/°C µV/°C µV/°C
I_{OS}	Input Offset Current	 LT1078I/LT1079I	● ●		0.07	0.50		0.07 0.1	0.70 1.0	nA nA
I_B	Input Bias Current		●		7	10		7	12	nA
CMRR	Common Mode Rejection Ratio	V_{CM} = 0.05V to 3.2V	●	92	106		88	104		dB
PSRR	Power Supply Rejection Ratio	V_S = 3.1V to 12V	●	98	110		94	110		dB
A_{VOL}	Large-Signal Voltage Gain	V_O = 0.05V to 4V, No Load V_O = 0.05V to 3.5V, R_L = 50k	● ●	110 80	600 400		80 60	600 400		V/mV V/mV
	Maximum Output Voltage Swing	Output Low, No Load Output Low, I_{SINK} = 100µA	● ●		4.5 125	8 170		4.5 125	8 170	mV mV
		Output High, No Load Output High, 2k to GND	● ●	3.9 3.0	4.2 3.7		3.9 3.0	4.2 3.7		V V
I_S	Supply Current per Amplifier		●		43	60		45	70	µA

The ● denotes the specifications which apply over the temperature range $0°C \le T_A \le 70°C$. V_S = 5V, 0V, V_{CM} = 0.1V, V_O = 1.4V unless otherwise noted.

SYMBOL	PARAMETER	CONDITIONS		LT1078AC/LT1079AC MIN	TYP	MAX	LT1078C/LT1079C LT1078S8/LT1079SW MIN	TYP	MAX	UNITS
V_{OS}	Input Offset Voltage	LT1078 LT1079 LT1078S8 LT1079SW	● ● ● ●		50 60	150 180		60 70 85 90	240 270 350 480	µV µV µV µV
$\frac{\Delta V_{OS}}{\Delta T}$	Input Offset Voltage Drift (Note 6)	 LT1078S8 LT1079SW	● ● ●		0.4	1.8		0.5 0.6 0.7	2.5 3.5 4.0	µV/°C µV/°C µV/°C
I_{OS}	Input Offset Current		●		0.06	0.35		0.06	0.50	nA
I_B	Input Bias Current		●		6	9		6	11	nA
CMRR	Common Mode Rejection Ratio	V_{CM} = 0V to 3.4V	●	94	108		90	106		dB
PSRR	Power Supply Rejection Ratio	V_S = 2.6V to 12V	●	100	112		97	112		dB
A_{VOL}	Large-Signal Voltage Gain	V_O = 0.05V to 4V, No Load V_O = 0.05V to 3.5V, R_L = 50k	● ●	150 110	750 500		110 80	750 500		V/mV V/mV
	Maximum Output Voltage Swing	Output Low, No Load Output Low, I_{SINK} = 100µA	● ●		4.0 105	7 150		4.0 105	7 150	mV mV
		Output High, No Load Output High, 2k to GND	● ●	4.1 3.3	4.3 3.8		4.1 3.3	4.3 3.8		V V
I_S	Supply Current per Amplifier		●		40	55		42	63	µA

ELECTRICAL CHARACTERISTICS

$V_S = \pm15V$, $T_A = 25°C$ unless otherwise noted.

SYMBOL	PARAMETER	CONDITIONS	LT1078AC/LT1079AC LT1078AM/LT1079AM MIN	TYP	MAX	LT1078C/LT1079C LT1078I/LT1079I LT1078M/LT1079M LT1078S8/LT1079SW MIN	TYP	MAX	UNITS
V_{OS}	Input Offset Voltage	(Including LT1078IS8/LT1078S8) LT1079ISW/LT1079SW		50	250		70 80	350 500	µV µV
I_{OS}	Input Offset Current			0.05	0.25		0.05	0.35	nA
I_B	Input Bias Current			6	8		6	10	nA
	Input Voltage Range		13.5 –15.0	13.8 –15.3		13.5 –15.0	13.8 –15.3		V V
CMRR	Common Mode Rejection Ratio	V_{CM} = 13.5V, –15V	100	114		97	114		dB
PSRR	Power Supply Rejection Ratio	V_S = 5V, 0V to ±18V	102	114		100	114		dB
A_{VOL}	Large-Signal Voltage Gain	$V_O = \pm10V$, R_L = 50k $V_O = \pm10V$, R_L = 2k	1000 400	5000 1100		1000 300	5000 1100		V/mV V/mV
V_{OUT}	Maximum Output Voltage Swing	R_L = 50k R_L = 2k	±13.0 ±11.0	±14.0 ±13.2		±13.0 ±11.0	±14.0 ±13.2		V V
SR	Slew Rate		0.06	0.10		0.06	0.10		V/µs
I_S	Supply Current per Amplifier			46	65		47	75	µA

The ● denotes the specifications which apply over the temperature range $-40°C \le T_A \le 85°C$ for I grades, $-55°C \le T_A \le 125°C$ for AM/M grades. $V_S = \pm15V$ unless otherwise noted.

SYMBOL	PARAMETER	CONDITIONS		LT1078AM/LT1079AM MIN	TYP	MAX	LT1078I/LT1079I LT1078M/LT1079M MIN	TYP	MAX	UNITS
V_{OS}	Input Offset Voltage	(Including LT1078IS8) LT1079ISW	● ●		90	430		120 130	600 825	µV µV
$\frac{\Delta V_{OS}}{\Delta T}$	Input Offset Voltage Drift (Note 6)	 LT1078IS8 LT1079ISW	● ● ●		0.5	1.8		0.6 0.7 0.8	2.5 3.8 5.0	µV/°C µV/°C µV/°C
I_{OS}	Input Offset Current	 LT1078I/LT1079I	● ●		0.07	0.50		0.07 0.1	0.70 1.0	nA nA
I_B	Input Bias Current		●		7	10		7	12	nA
A_{VOL}	Large-Signal Voltage Gain	$V_O = \pm10V$, R_L = 5k	●	200	700		150	700		V/mV
CMRR	Common Mode Rejection Ratio	V_{CM} = 13V, –14.9V	●	94	110		90	110		dB
PSRR	Power Supply Rejection Ratio	V_S = 5V, 0V to ±18V	●	98	110		94	110		dB
	Maximum Output Voltage Swing	R_L = 5k	●	±11.0	±13.5		±11.0	±13.5		V
I_S	Supply Current per Amplifier		●		52	80		54	95	µA

ELECTRICAL CHARACTERISTICS

The ● denotes the specifications which apply over the temperature range $0°C \le T_A \le 70°C$. $V_S = \pm15V$ unless otherwise noted.

SYMBOL	PARAMETER	CONDITIONS		LT1078AC/LT1079AC MIN	TYP	MAX	LT1078C/LT1079C LT1078S8/LT1079SW MIN	TYP	MAX	UNITS
V_{OS}	Input Offset Voltage		●		70	330		90	460	µV
		LT1078S8	●					100	540	µV
		LT1079SW	●					115	750	µV
$\frac{\Delta V_{OS}}{\Delta T}$	Input Offset Voltage Drift (Note 6)		●		0.5	1.8		0.6	2.5	µV/°C
		LT1078S8	●					0.7	3.8	µV/°C
		LT1079SW	●					0.8	5.0	µV/°C
I_{OS}	Input Offset Current		●		0.06	0.35		0.06	0.50	nA
I_B	Input Bias Current		●		6	9		6	11	nA
A_{VOL}	Large-Signal Voltage Gain	$V_O = \pm10V$, $R_L = 5k$	●	300	1200		250	1200		V/mV
CMRR	Common Mode Rejection Ratio	$V_{CM} = 13V, -15V$	●	97	112		94	112		dB
PSRR	Power Supply Rejection Ratio	$V_S = 5V$, 0V to $\pm18V$	●	100	112		97	112		dB
	Maximum Output Voltage Swing	$R_L = 5k$	●	±11.0	±13.6		±11.0	±13.6		V
I_S	Supply Current per Amplifier		●		49	73		50	85	µA

Note 1: Absolute Maximum Ratings are those values beyond which the life of a device may be impaired.

Note 2: Typical parameters are defined as the 60% yield of parameter distributions of individual amplifiers, i.e., out of 100 LT1079s (or 100 LT1078s) typically 240 op amps (or 120) will be better than the indicated specification.

Note 3: This parameter is tested on a sample basis only. All noise parameters are tested with $V_S = \pm2.5V$, $V_O = 0V$.

Note 4: This parameter is guaranteed by design and is not tested.

Note 5: Power supply rejection ratio is measured at the minimum supply voltage. The op amps actually work at 1.8V supply but with a typical offset skew of –300µV.

Note 6: This parameter is not 100% tested.

TYPICAL PERFORMANCE CHARACTERISTICS

Supply Current vs Temperature

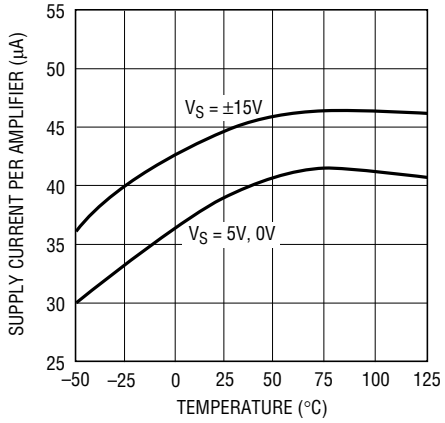

LT1078/79 • TPC01

Input Bias and Offset Currents vs Temperature

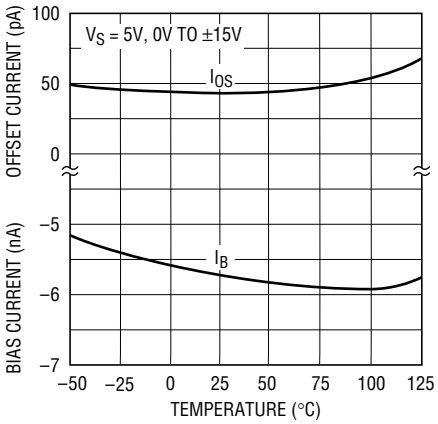

LT1078/79 • TPC02

Input Bias Current vs Common Mode Voltage

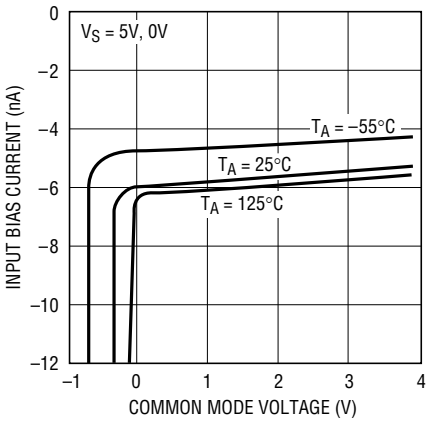

LT1078/79 • TPC03

0.1Hz to 10Hz Noise

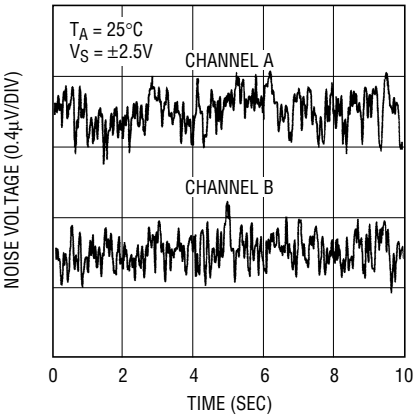

LT1078/79 • TPC04

0.01Hz to 10Hz Noise

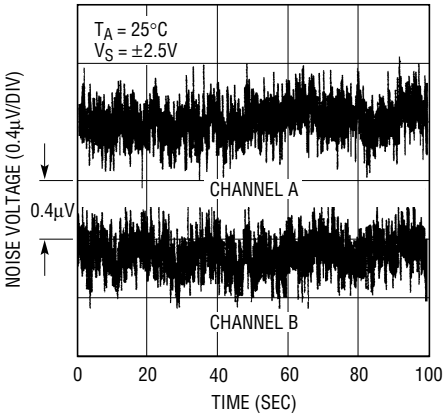

LT1078/79 • TPC05

Noise Spectrum

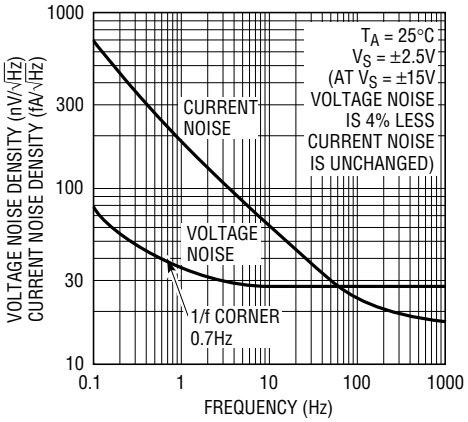

LT1078/79 • TPC06

10Hz Voltage Noise Distribution

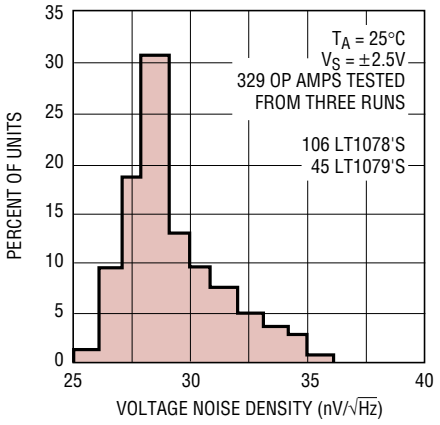

LT1078/79 • TPC07

Distribution of Offset Voltage Drift with Temperature (In All Packages Except Surface Mount)

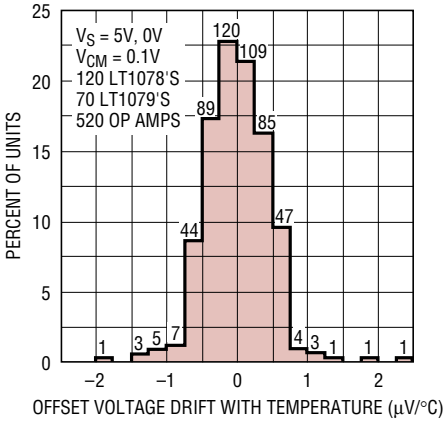

LT1078/79 • TPC08

Long Term Stability of Two Representative Units (LT1078)

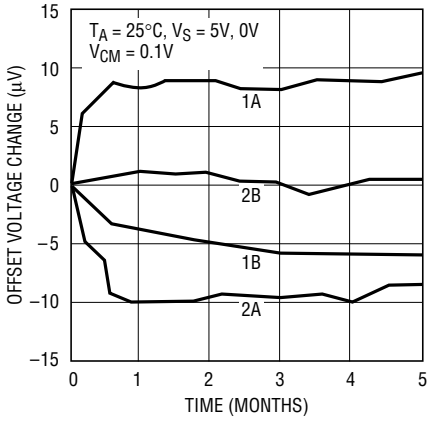

LT1078/79 • TPC09

TYPICAL PERFORMANCE CHARACTERISTICS

Voltage Gain vs Frequency

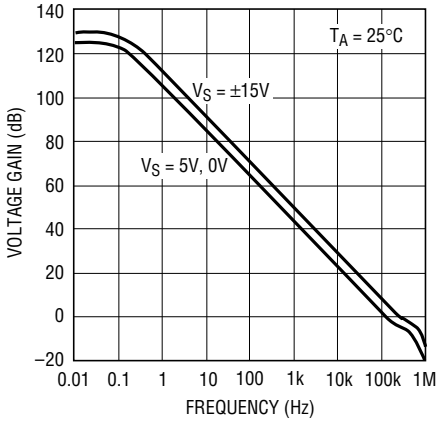

Gain, Phase vs Frequency

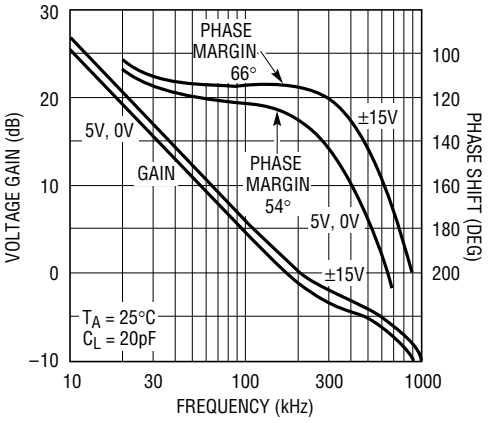

Capacitive Load Handling

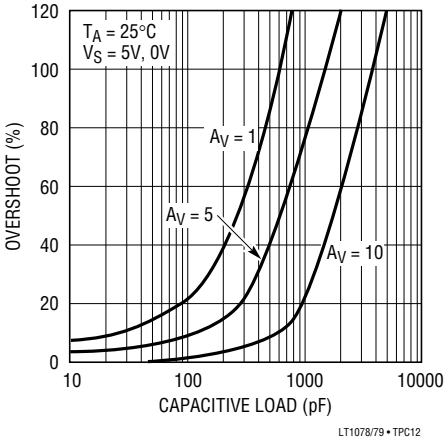

Slew Rate, Gain Bandwidth Product and Phase Margin vs Temperature

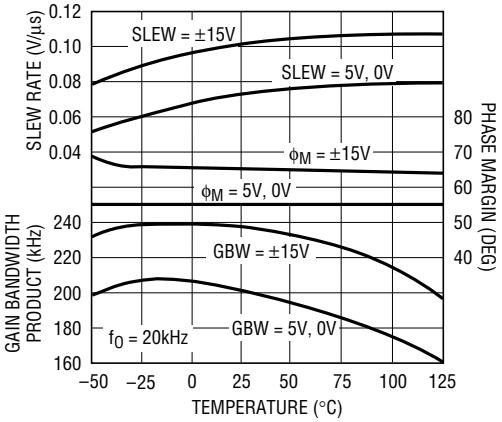

Large-Signal Transient Response V_S = 5V, 0V

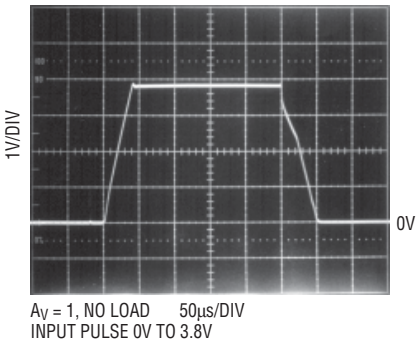

Large-Signal Transient Response V_S = ±15V

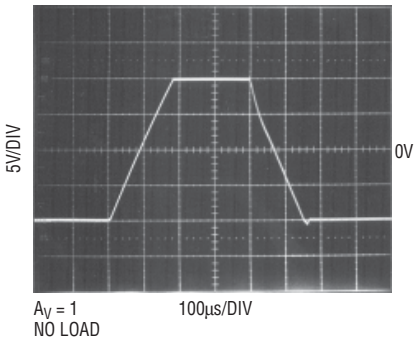

Minimum Supply Voltage

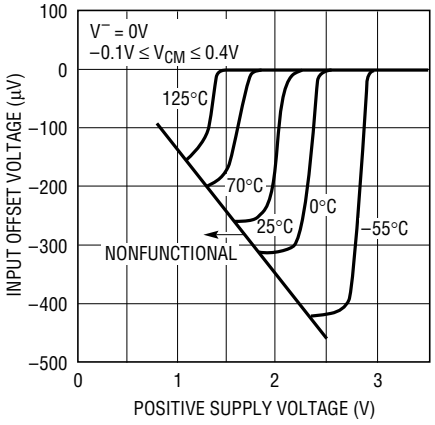

Warm-Up Drift

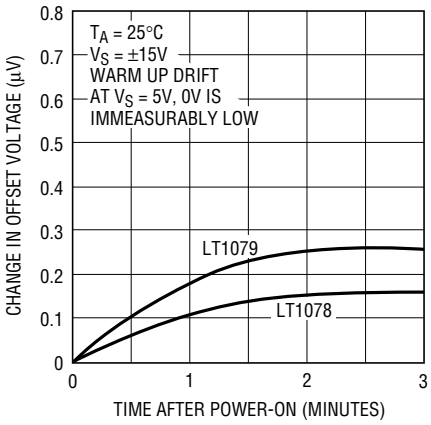

Voltage Gain vs Load Resistance

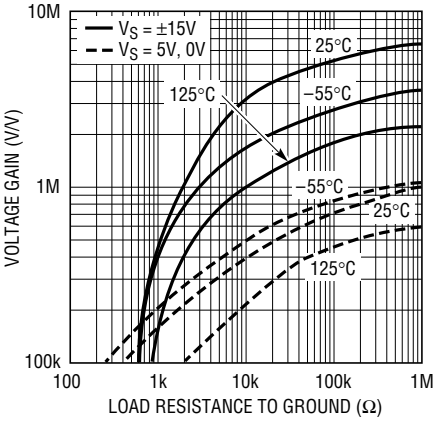

TYPICAL PERFORMANCE CHARACTERISTICS

Output Saturation vs Temperature vs Sink Current

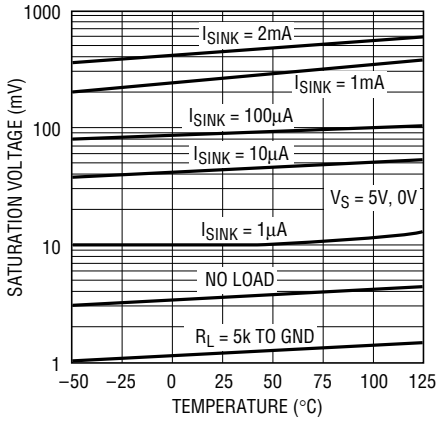

LT1078/79 • TPC19

Output Voltage Swing vs Load Current

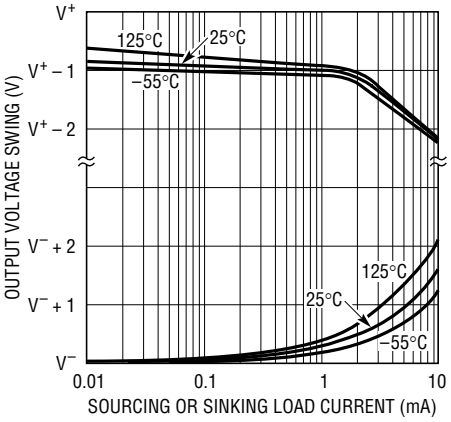

LT1078/79 • TPC20

Distribution of Input Offset Voltage (LT1078 in 8-Pin SO Package)

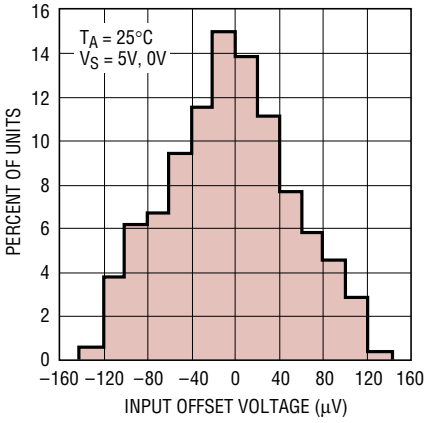

LT1078/79 • TPC21

Common Mode Range vs Temperature

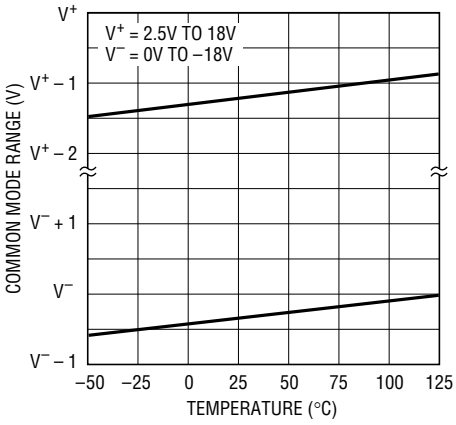

LT1078/79 • TPC22

Undistorted Output Swing vs Frequency

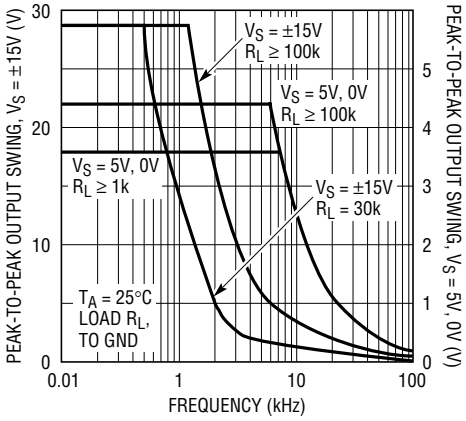

LT1078/79 • TPC23

Closed Loop Output Impedance

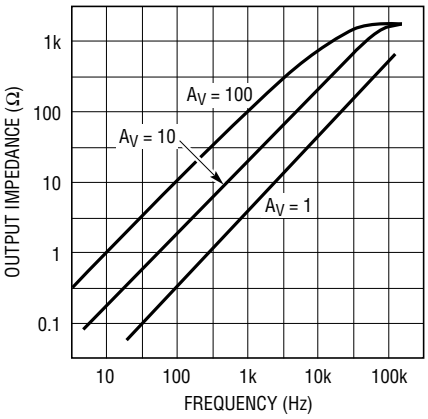

LT1078/79 • TPC24

Common Mode Rejection Ratio vs Frequency

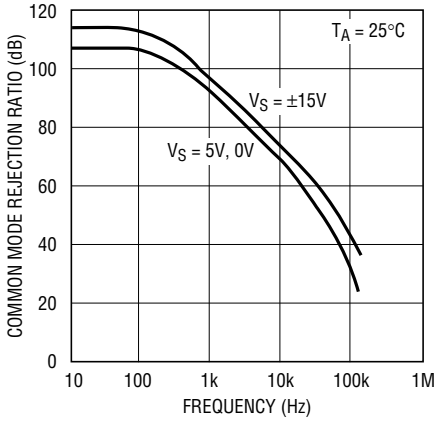

LT1078/79 • TPC25

Power Supply Rejection Ratio vs Frequency

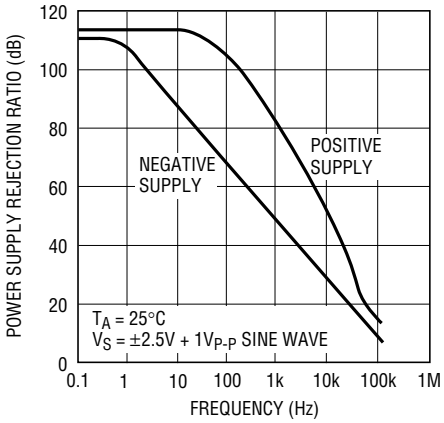

LT1078/79 • TPC26

Channel Separation vs Frequency

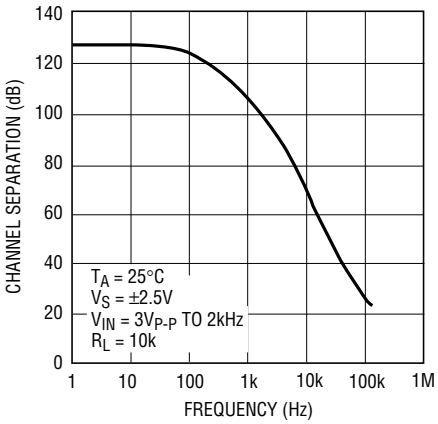

LT1078/79 • TPC27

TYPICAL PERFORMANCE CHARACTERISTICS

Small-Signal Transient Response
V_S = 5V, 0V

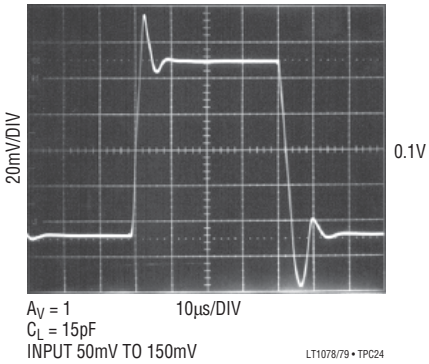

Small-Signal Transient Response
V_S = ±2.5V

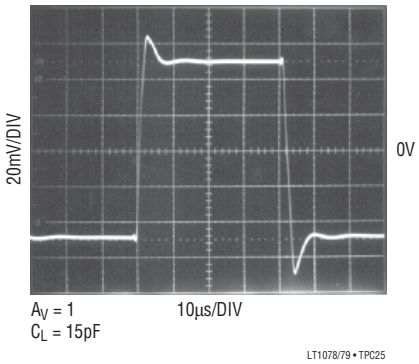

Small-Signal Transient Response
V_S = ±15V

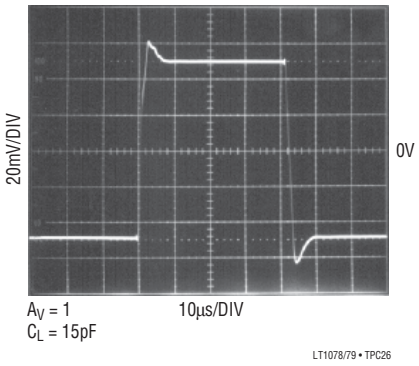

APPLICATIONS INFORMATION

The LT1078/LT1079 devices are fully specified with V^+ = 5V, V^- = 0V, V_{CM} = 0.1V. This set of operating conditions appears to be the most representative for battery-powered micropower circuits. Offset voltage is internally trimmed to a minimum value at these supply voltages. When 9V or 3V batteries or ±2.5V dual supplies are used, bias and offset current changes will be minimal. Offset voltage changes will be just a few microvolts as given by the PSRR and CMRR specifications. For example, if PSRR = 114dB (= 2µV/V), at 9V the offset voltage change will be 8µV. Similarly, V_S = ±2.5V, V_{CM} = 0V is equivalent to a common mode voltage change of 2.4V or a V_{OS} change of 7µV if CMRR = 110dB (3µV/V).

A full set of specifications is also provided at ±15V supply voltages for comparison with other devices and for completeness.

Single Supply Operation

The LT1078/LT1079 are fully specified for single supply operation, i.e., when the negative supply is 0V. Input common mode range goes below ground and the output swings within a few millivolts of ground while sinking current. All competing micropower op amps either cannot swing to within 600mV of ground (OP-20, OP-220, OP-420) or need a pull-down resistor connected to the output to swing to ground (OP-90, OP-290, OP-490, HA5141/42/44). This

APPLICATIONS INFORMATION

difference is critical because in many applications these competing devices cannot be operated as micropower op amps and swing to ground simultaneously.

As an example, consider the instrumentation amplifier shown on the front page. When the common mode signal is low and the output is high, amplifier A has to sink current. When the common mode signal is high and the output low, amplifier B has to sink current. The competing devices require a 12k pull-down resistor at the output of amplifier A and a 15k at the output of B to handle the specified signals. (The LT1078 does not need pull-down resistors.) When the common mode input is high and the output is high these pull-down resistors draw 300μA (150μA each), which is excessive for micropower applications.

The instrumentation amplifier is by no means the only application requiring current sinking capability. In seven of the nine single supply applications shown in this data sheet the op amps have to be able to sink current. In two of the applications the first amplifier has to sink only the 6nA input bias current of the second op amp. The competing devices, however, cannot even sink 6nA without a pull-down resistor

Since the output of the LT1078/LT1079 cannot go exactly to ground, but can only approach ground to within a few millivolts, care should be exercised to ensure that the output is not saturated. For example, a 1mV input signal will cause the amplifier to set up in its linear region in the gain 100 configuration shown in Figure 1a, but is not enough to make the amplifier function properly in the voltage follower mode, Figure 1b.

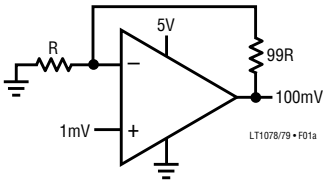

Figure 1a. Gain 100 Amplifier

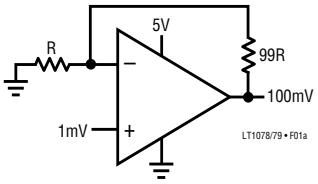

Figure 1b. Voltage Follower

Single supply operation can also create difficulties at the input. The driving signal can fall below 0V — inadvertently or on a transient basis. If the input is more than a few hundred millivolts below ground, two distinct problems can occur on previous single supply designs, such as the LM124, LM158, OP-20, OP-21, OP-220, OP-221, OP-420 (1 and 2), OP-90/290/490 (2 only):

1. When the input is more than a diode drop below ground, unlimited current will flow from the substrate (V^- terminal) to the input. This can destroy the unit. On the LT1078/LT1079, resistors in series with the input protect the devices even when the input is 5V below ground.
2. When the input is more than 400mV below ground (at 25°C), the input stage saturates and phase reversal occurs at the output. This can cause lockup in servo systems. Due to a unique phase reversal protection circuitry, the LT1078/LT1079 output does not reverse, as illustrated in Figure 2, even when the inputs are at –1V.

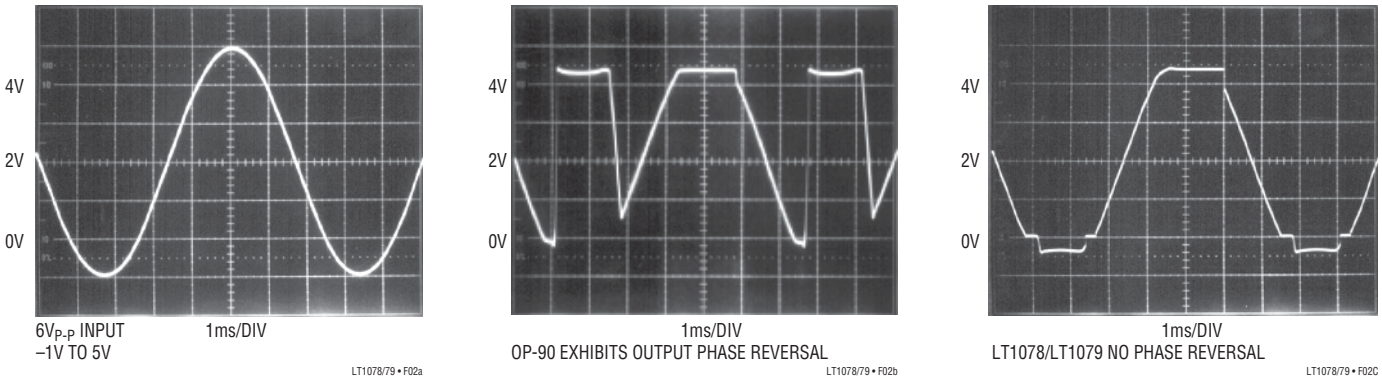

Figure 2. Voltage Follower with Input Exceeding the Negative Common Mode Range (V_S = 5V, 0V)

APPLICATIONS INFORMATION

Matching Specifications

In many applications the performance of a system depends on the matching between two op amps, rather than the individual characteristics of the two devices. The two and three op amp instrumentation amplifier configurations shown in this data sheet are examples. Matching characteristics are not 100% tested on the LT1078/LT1079.

Some specifications are guaranteed by definition. For example, 70μV maximum offset voltage implies that mismatch cannot be more than 140μV. 97dB (= 14μV/V) CMRR means that worst-case CMRR match is 91dB (= 28μV/V). However, Table 1 can be used to estimate the expected matching performance at V_S = 5V, 0V between the two sides of the LT1078, and between amplifiers A and D, and between amplifiers B and C of the LT1079.

Table 1

		LT1078AC/LT1079AC/LT1078AM/LT1079AM		LT1078C/LT1079C/LT1078M/LT1079M		
PARAMETER		**50% YIELD**	**98% YIELD**	**50% YIELD**	**98% YIELD**	**UNITS**
V_{OS} Match, ΔV_{OS}	LT1078	30	110	50	190	μV
	LT1079	40	150	50	250	μV
Temperature Coefficient ΔV_{OS}		0.5	1.2	0.6	1.8	μV/°C
Average Noninverting I_B		6	8	6	10	nA
Match of Noninverting I_B		0.12	0.4	0.15	0.5	nA
CMRR Match		120	100	117	97	dB
PSRR Match		117	105	117	102	dB

Comparator Applications

The single supply operation of the LT1078/LT1079 and its ability to swing close to ground while sinking current lends itself to use as a precision comparator with TTL compatible output.

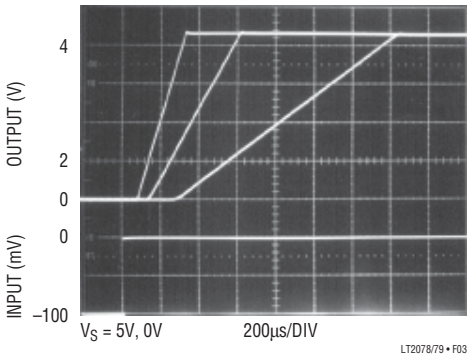

Figure 3. Comparator Rise Response Time to 10mV, 5mV, 2mV Overdrives

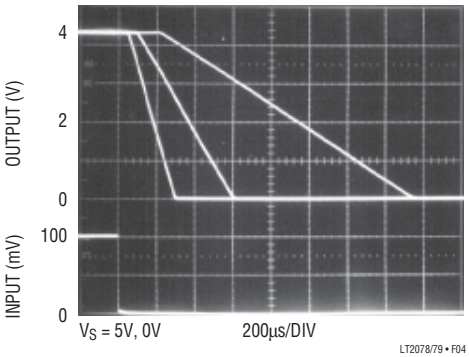

Figure 4. Comparator Fall Response Time to 10mV, 5mV, 2mV Overdrives

TYPICAL APPLICATIONS

Micropower, 10ppm/°C, ±5V Reference

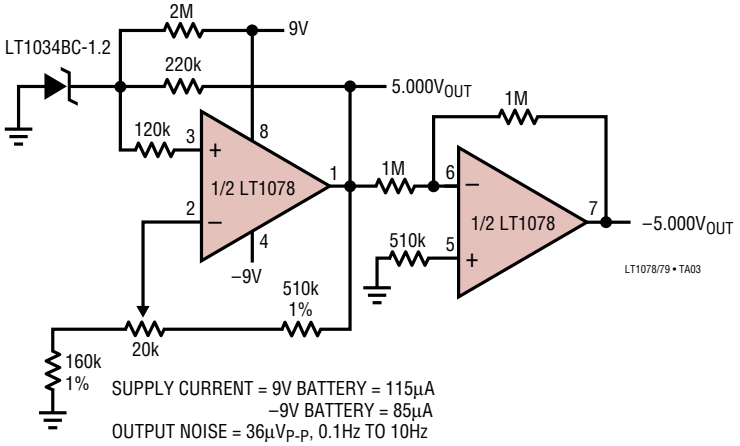

SUPPLY CURRENT = 9V BATTERY = 115μA
–9V BATTERY = 85μA
OUTPUT NOISE = 36μV$_{P-P}$, 0.1Hz TO 10Hz

THE LT1078 CONTRIBUTES LESS THAN 3% OF THE TOTAL OUTPUT NOISE AND DRIFT WITH TIME AND TEMPERATURE. THE ACCURACY OF THE –5V OUTPUT DEPENDS ON THE MATCHING OF THE TWO 1M RESISTORS

Gain of 10 Difference Amplifier

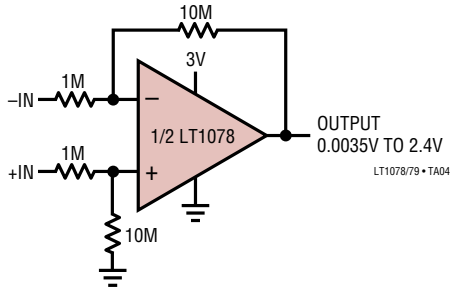

BANDWIDTH= 20kHz
OUTPUT OFFSET= 0.7mV
OUTPUT NOISE= 80μV$_{P-P}$ (0.1Hz TO 10Hz)
260μV$_{RMS}$ OVER FULL BANDWIDTH

THE USEFULNESS OF DIFFERENCE AMPLIFIERS IS LIMITED BY THE FACT THAT THE INPUT RESISTANCE IS EQUAL TO THE SOURCE RESISTANCE. THE PICOAMPERE OFFSET CURRENT AND LOW CURRENT NOISE OF THE LT1078 ALLOWS THE USE OF 1M SOURCE RESISTORS WITHOUT DEGRADATION IN PERFORMANCE. IN ADDITION, WITH MEGOHM RESISTORS MICROPOWER OPERATION CAN BE MAINTAINED

Picoampere Input Current, Triple Op Amp Instrumentation Amplifier with Bias Current Cancellation

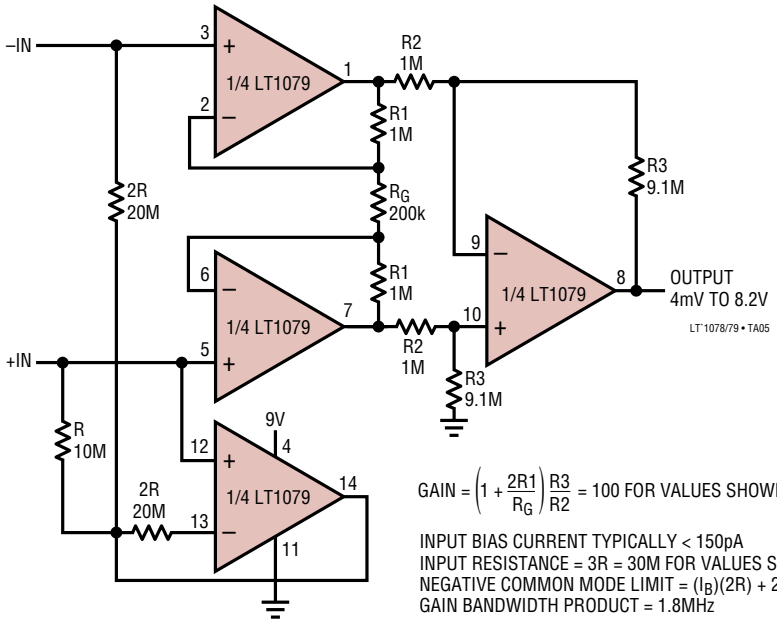

$$\text{GAIN} = \left(1 + \frac{2R1}{R_G}\right)\frac{R3}{R2} = 100 \text{ FOR VALUES SHOWN}$$

INPUT BIAS CURRENT TYPICALLY < 150pA
INPUT RESISTANCE = 3R = 30M FOR VALUES SHOWN
NEGATIVE COMMON MODE LIMIT = (I_B)(2R) + 20mV ≈ 140mV
GAIN BANDWIDTH PRODUCT = 1.8MHz

TYPICAL APPLICATIONS

85V, –100V Common Mode Range Instrumentation Amplifier (A_V = 10)

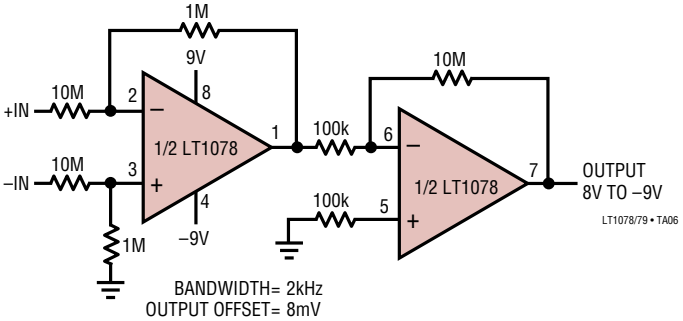

BANDWIDTH = 2kHz
OUTPUT OFFSET = 8mV
OUTPUT NOISE = 0.8mV$_{P-P}$ (0.1Hz TO 10Hz)
= 1.4mV$_{RMS}$ OVER FULL BANDWIDTH (DOMINATED BY RESISTOR NOISE)
INPUT RESISTANCE = 10M

Half-Wave Rectifier

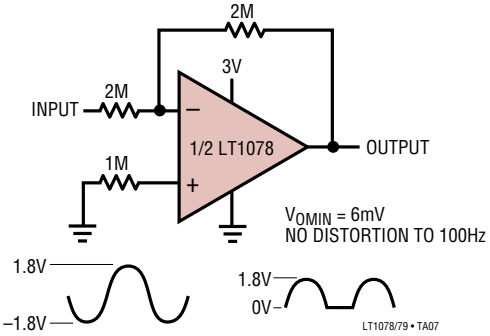

V_{OMIN} = 6mV
NO DISTORTION TO 100Hz

Absolute Value Circuit (Full-Wave Rectifier)

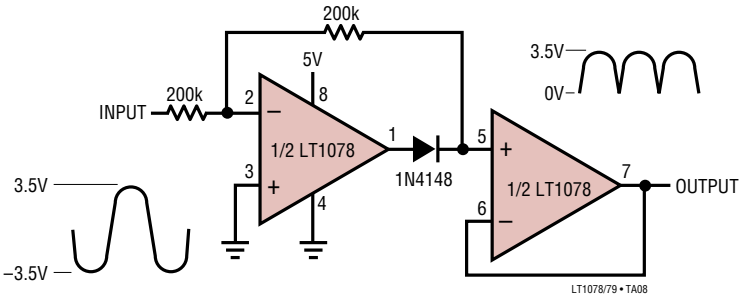

V_{OMIN} = 4mV
NO DISTORTION TO 100Hz

Programmable Gain Amplifier (Single Supply)

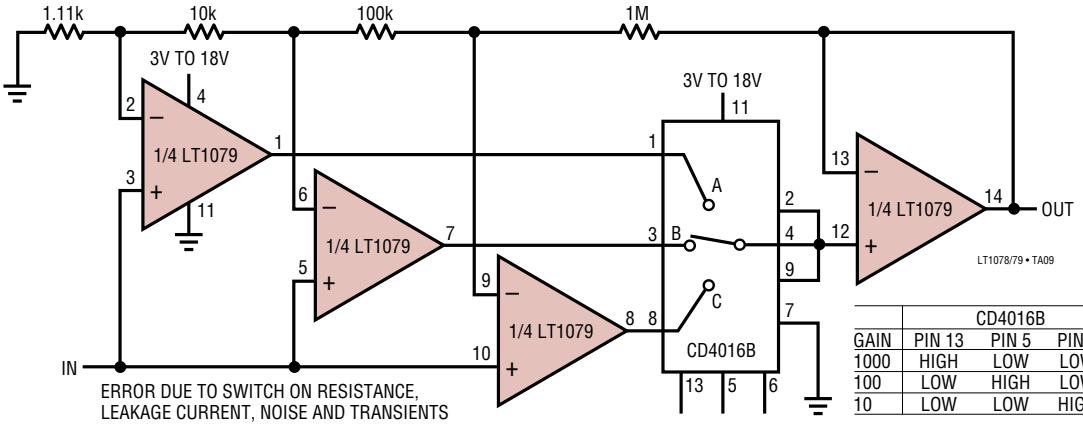

ERROR DUE TO SWITCH ON RESISTANCE, LEAKAGE CURRENT, NOISE AND TRANSIENTS ARE ELIMINATED

	CD4016B		
GAIN	PIN 13	PIN 5	PIN 6
1000	HIGH	LOW	LOW
100	LOW	HIGH	LOW
10	LOW	LOW	HIGH

TYPICAL APPLICATIONS

Single Supply, Micropower, Second Order Lowpass Filter with 60Hz Notch

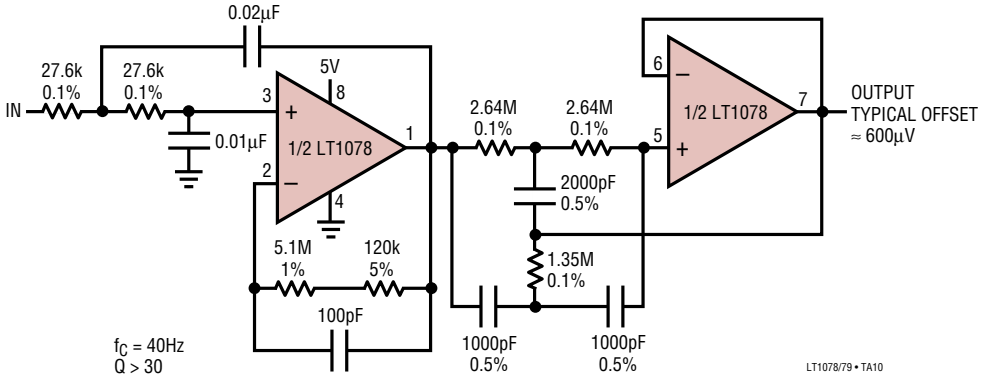

Micropower Multiplier/Divider

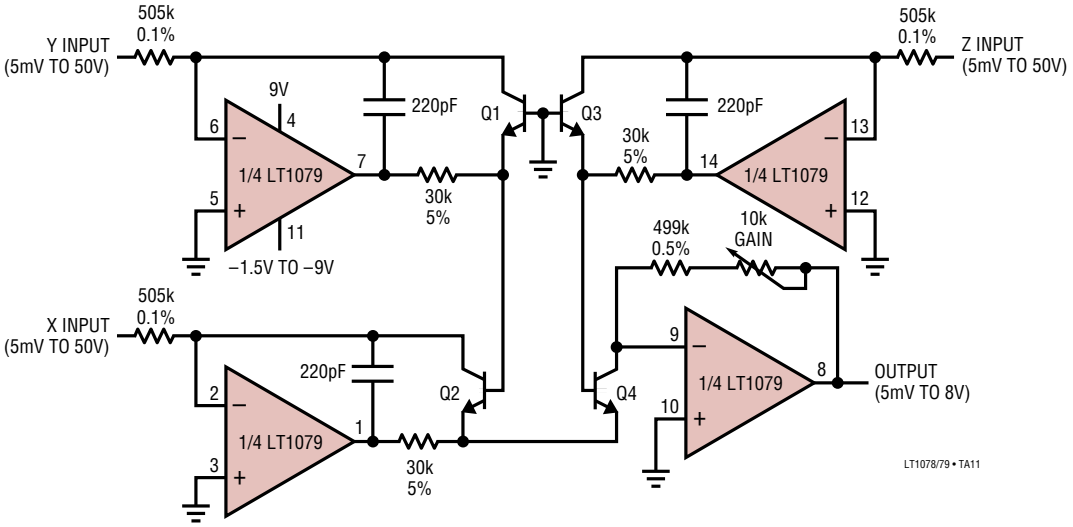

Q1,Q2, Q3, Q4 = MAT-04
TYPICAL LINEARITY = 0.01% OF FULL-SCALE OUTPUT

OUTPUT = $\frac{(X)(Y)}{(Z)}$, POSITIVE INPUTS ONLY

NEGATIVE SUPPLY CURRENT = 165µA + $\frac{X + Y + Z + OUT}{500k}$

POSITIVE SUPPLY CURRENT = 165µA + $\frac{OUT}{500k}$

BANDWIDTH (< $3V_{P-P}$ SIGNAL): X AND Y INPUTS = 10kHz
Z INPUT = 4kHz

TYPICAL APPLICATIONS

Micropower Dead Zone Generator

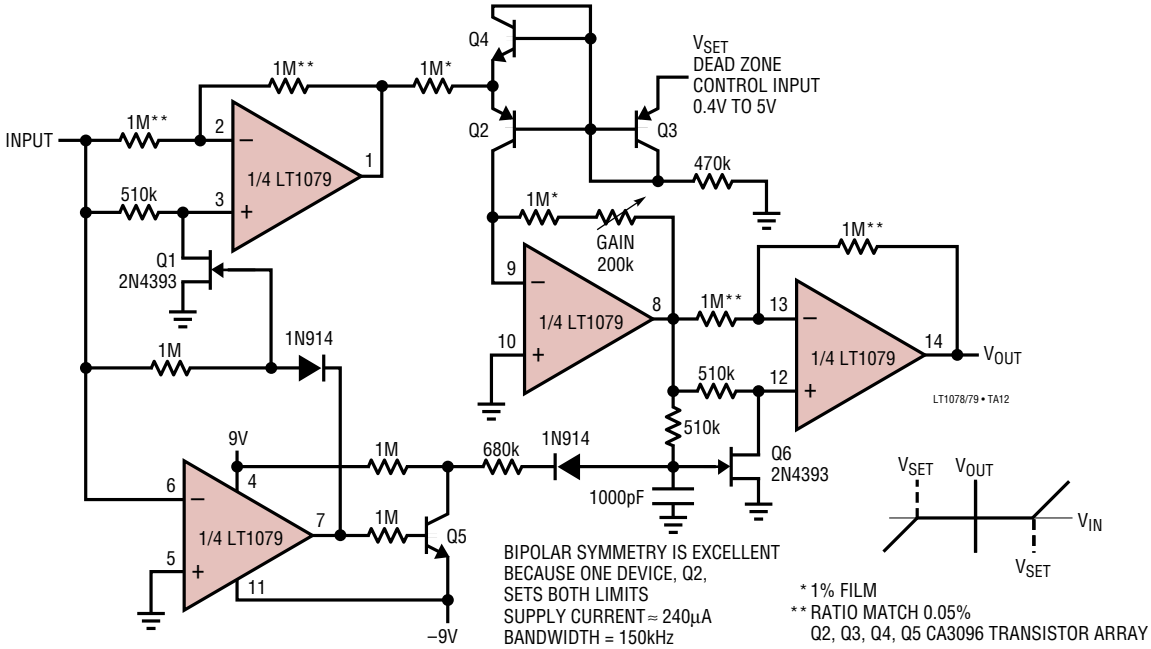

TYPICAL APPLICATIONS

Lead-Acid Low-Battery Detector with System Shutdown

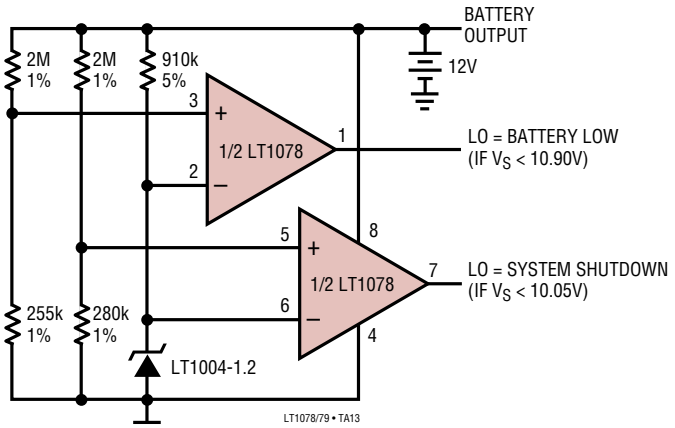

TOTAL SUPPLY CURRENT = 105μA

Platinum RTD Signal Conditioner with Curvature Correction

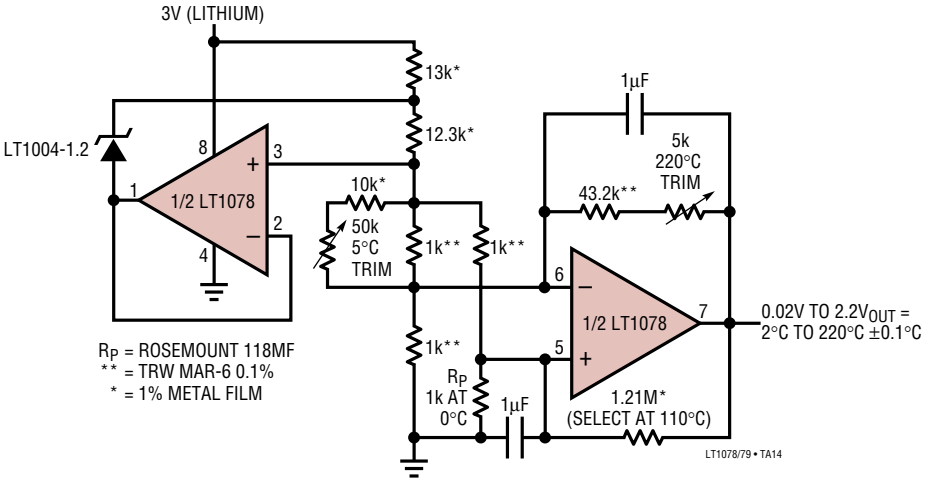

SIMPLIFIED SCHEMATIC

1/2 LT1078, 1/4 LT1079

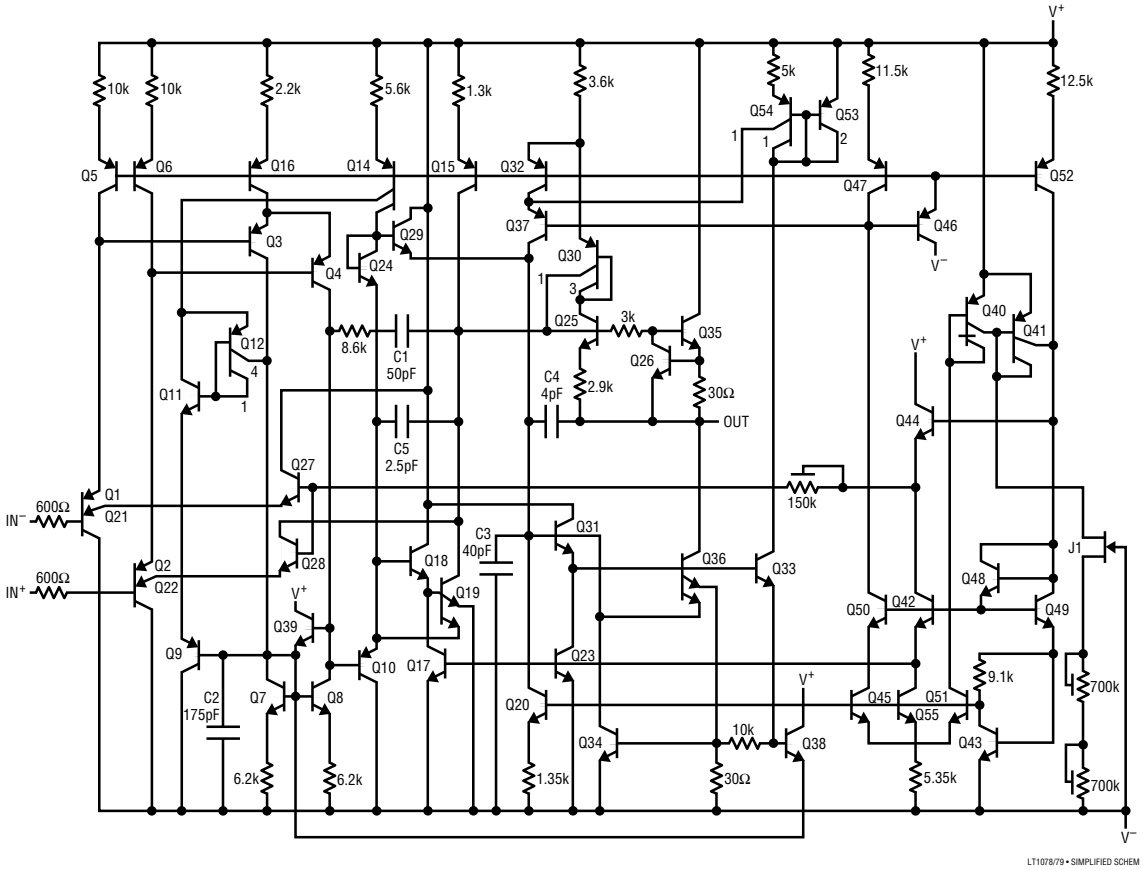

PACKAGE DESCRIPTION

H Package
8-Lead TO-5 Metal Can (.230 Inch PCD)
(Reference LTC DWG # 05-08-1321)

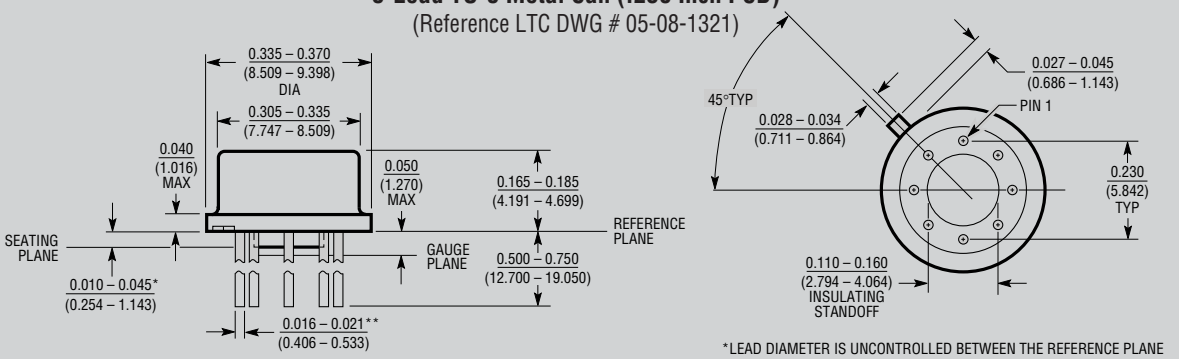

*LEAD DIAMETER IS UNCONTROLLED BETWEEN THE REFERENCE PLANE AND 0.045" BELOW THE REFERENCE PLANE

**FOR SOLDER DIP LEAD FINISH, LEAD DIAMETER IS 0.016 – 0.024 (0.406 – 0.610)

H8 (TO-5) 0.230 PCD 1197

OBSOLETE PACKAGE

PACKAGE DESCRIPTION

J8 Package
8-Lead CERDIP (Narrow .300 Inch, Hermetic)
(Reference LTC DWG # 05-08-1110)

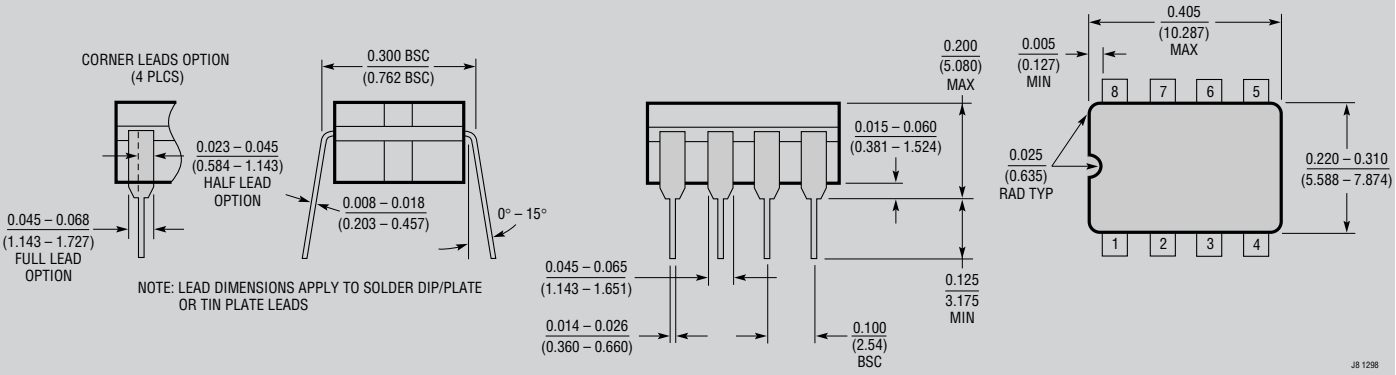

J Package
14-Lead CERDIP (Narrow .300 Inch, Hermetic)
(Reference LTC DWG # 05-08-1110)

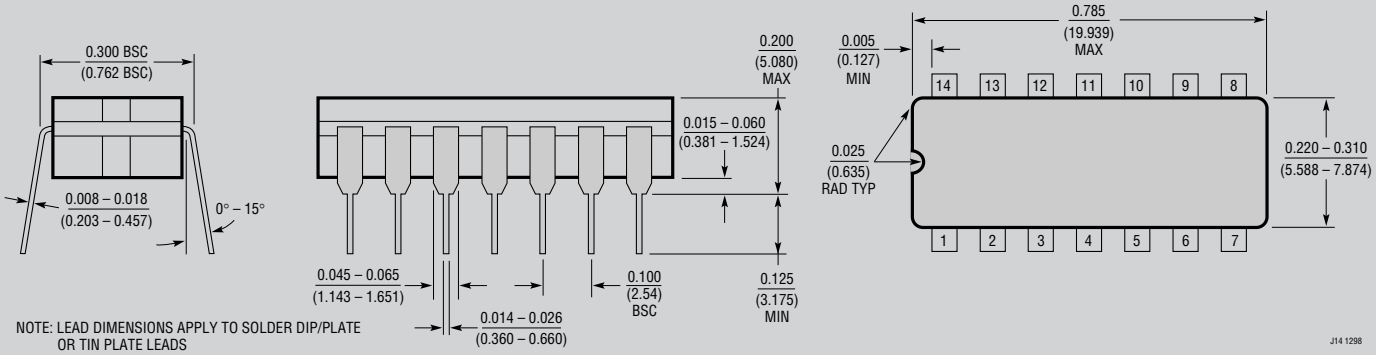

OBSOLETE PACKAGES

N8 Package
8-Lead PDIP (Narrow .300 Inch)
(Reference LTC DWG # 05-08-1510)

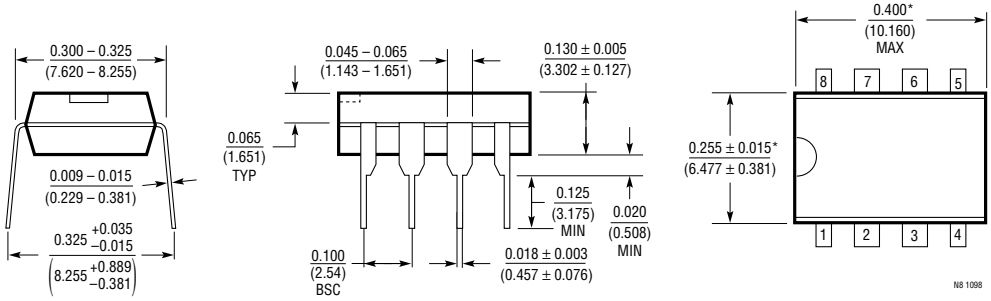

*THESE DIMENSIONS DO NOT INCLUDE MOLD FLASH OR PROTRUSIONS.
MOLD FLASH OR PROTRUSIONS SHALL NOT EXCEED 0.010 INCH (0.254mm)

Information furnished by Linear Technology Corporation is believed to be accurate and reliable. However, no responsibility is assumed for its use. Linear Technology Corporation makes no representation that the interconnection of its circuits as described herein will not infringe on existing patent rights.

PACKAGE DESCRIPTION

N Package
14-Lead PDIP (Narrow .300 Inch)
(Reference LTC DWG # 05-08-1510)

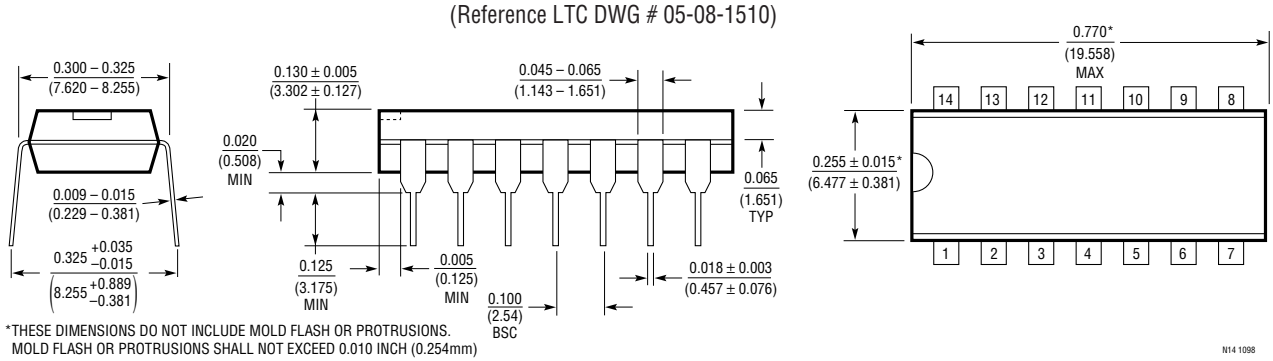

*THESE DIMENSIONS DO NOT INCLUDE MOLD FLASH OR PROTRUSIONS.
MOLD FLASH OR PROTRUSIONS SHALL NOT EXCEED 0.010 INCH (0.254mm)

S8 Package
8-Lead Plastic Small Outline (Narrow .150 Inch)
(Reference LTC DWG # 05-08-1610)

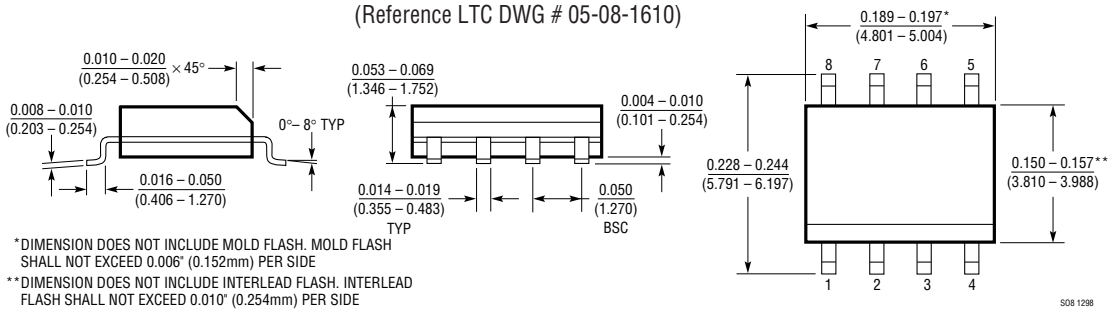

*DIMENSION DOES NOT INCLUDE MOLD FLASH. MOLD FLASH
SHALL NOT EXCEED 0.006" (0.152mm) PER SIDE
**DIMENSION DOES NOT INCLUDE INTERLEAD FLASH. INTERLEAD
FLASH SHALL NOT EXCEED 0.010" (0.254mm) PER SIDE

SW Package
16-Lead Plastic Small Outline (Wide .300 Inch)
(Reference LTC DWG # 05-08-1620)

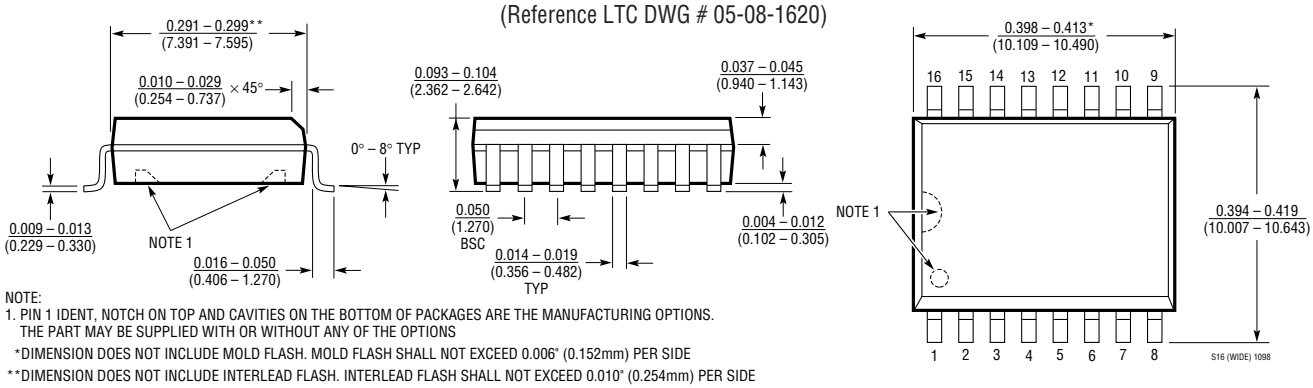

NOTE:
1. PIN 1 IDENT, NOTCH ON TOP AND CAVITIES ON THE BOTTOM OF PACKAGES ARE THE MANUFACTURING OPTIONS.
THE PART MAY BE SUPPLIED WITH OR WITHOUT ANY OF THE OPTIONS

*DIMENSION DOES NOT INCLUDE MOLD FLASH. MOLD FLASH SHALL NOT EXCEED 0.006" (0.152mm) PER SIDE

**DIMENSION DOES NOT INCLUDE INTERLEAD FLASH. INTERLEAD FLASH SHALL NOT EXCEED 0.010" (0.254mm) PER SIDE

Linear Technology Corporation
1630 McCarthy Blvd., Milpitas, CA 95035-7417
(408) 432-1900 • FAX: (408) 434-0507 • www.linear.com

LT/CPI 1201 1.5K REV E • PRINTED IN USA

© LINEAR TECHNOLOGY CORPORATION 1994

Мы молодая и активно развивающаяся компания в области поставок электронных компонентов. Мы поставляем электронные компоненты отечественного и импортного производства напрямую от производителей и с крупнейших складов мира.

Благодаря сотрудничеству с мировыми поставщиками мы осуществляем комплексные и плановые поставки широчайшего спектра электронных компонентов.

Собственная эффективная логистика и склад в обеспечивает надежную поставку продукции в точно указанные сроки по всей России.

Мы осуществляем техническую поддержку нашим клиентам и предпродажную проверку качества продукции. На все поставляемые продукты мы предоставляем гарантию .

Осуществляем поставки продукции под контролем ВП МО РФ на предприятия военно-промышленного комплекса России , а также работаем в рамках 275 ФЗ с открытием отдельных счетов в уполномоченном банке. Система менеджмента качества компании соответствует требованиям ГОСТ ISO 9001.

Минимальные сроки поставки, гибкие цены, неограниченный ассортимент и индивидуальный подход к клиентам являются основой для выстраивания долгосрочного и эффективного сотрудничества с предприятиями радиоэлектронной промышленности, предприятиями ВПК и научно-исследовательскими институтами России.

С нами вы становитесь еще успешнее!

Наши контакты:

Телефон: +7 812 627 14 35

Электронная почта: sales@st-electron.ru

Адрес: 198099, Санкт-Петербург, Промышленная ул, дом № 19, литера Н, помещение 100-Н Офис 331