# Altech Corp.®

*Serving the Automation & Control Industry since 1984*

Quality System
Quality Endorsed Company

57.9

60.4

**DOLD**

# DIN Enclosures

# Altech's DIN Enclosures by DOLD

Since 1984 Altech Corporation has grown to become a leading supplier of automation and industrial control components. Headquartered in Flemington, NJ, Altech has an experienced staff of engineering, manufacturing and sales personnel to provide the highest quality products with superior service. This is the Altech Commitment!

Build or maintain your competitive edge in the world markets. Enhance the value of your products and devices by packaging them attractively with enclosures from Altech. Applications are limitless. Our compact DIN enclosures are ideal for housing electrical, electronic and electromechanical devices including relays, sensing and monitoring devices, timers, transducers, printed circuit boards and more.

Altech's line of DIN Enclosures are manufactured by DOLD, a company well know in Europe for its quality DIN Enclosures and Safety Relays. They offer the most comprehensive selection of DIN enclosures available. These versatile housings are economical, easy to assemble and install. They provide protection and integral, ready-to-wire terminals in one attractive package. And at a level of quality that meets or exceeds national and international standards for performance and safety.

Wide Range of Sizes and Designs, Choice of Cover Styles, Terminal-To-Board Connection Options and 35mm DIN Rail or Panel Mount. Only flame retardant, maintenance free materials are used for safety, and to insure that your control devices look good for many years to come.

Customizing is easy. We can cut special holes and cutouts for operating, setting or indicating components that you may wish to install into the front panel. Terminals can be marked for quick identification and efficient field wiring. Instructions and custom markings can be imprinted. Our enclosures can even be molded in custom colors and custom configurations (OEM quantities). Whatever your requirements may be, we will do our best to help you meet them.

Our well trained technical experts welcome the opportunity to answer your technical questions and provide solutions to your automation and control needs. Give us a call or visit www.altechcorp.com.

## Quality Commitment

*Altech's control components meet diverse national and international standards such as UL, NEC, CSA IEC VDE and more. Altech provides superior customer service and delivery through Total Quality Management and Continuous Process Improvement. Altech is ISO 9001 approved. We perform these services with honesty and integrity and are committed to achieve these goals.*

CONTENTS

## KS4400

The KS4400 series is simple, modular and flexible yet highly functional. The half shell design is cost effective and provides exceptional space utilization. Three levels of terminals with fixed and pluggable PCB terminal options allow for high density connections. A large front face area provides ample space for operator, communication and visual display components.

- DIN Rail Mount
- Fixed and Pluggable Terminals
- High Density Terminal Configuration
- Compact, Snap-together
- Standard Color: Black Housing with Gray Front Plate

4-11

## KO4700

Our most popular enclosures, the KO4700 series offer a wide range of sizes with single and double level terminal configurations. They can be used for a wide range of applications. Complete with 8 to 132 terminals, select from pressure plate or box clamp terminations with fixed or pluggable terminal-to-board connections. Several cover designs add to the versatility of this series.

- DIN Rail or Panel Mount
- Fixed and Pluggable Designs
- Snap-On Keyed Covers
- Integral PC Board Guides
- Standard Color: Black Housing Shell with Tan Cover
- Modular Terminal Enclosures, pages 32-39

12-39

## K70

K70 series enclosures include a range of small to medium size DIN enclosures, complete with 8 to 32 terminals. They offer cost effective solutions for many applications. The K70s are supplied with integral pressure plate terminals for reliable connections. Terminal-to-board connections include fixed and pluggable solutions.

- DIN Rail or Panel Mount
- Integral PC Board Guides
- Snap-On Covers
- Fixed and Pluggable Designs
- Standard Color: Light Gray

40-47

## KU4000

The versatile KU4000 series enclosures feature generous internal space for printed circuit boards and electronic components. High density, double level snap-in terminals are of the pressure plate or spring cage design for gastight, vibration proof connections. Straight or angled solder pins offer flexibility in board layout. All versions have machine solderable terminals. KU4000 housings fit into standard 45mm (1.77 in.) high international style cutouts.

- DIN Rail or Panel Mount
- Integral PC Board Guides
- Front Fits 45mm (1.77 in.) Cutouts
- Terminal Cover Plugs Available
- Standard Color: Light Gray

48-73

## KU4100

The versatile KU4100 series features a compact design with different terminal configuration options. They are available in six widths with double level terminal locations. Terminal configuration options include blank enclosures with no terminal openings, fixed PCB terminals and pluggable PCB terminals.

- DIN Rail Mount
- Front Fits 45mm (1.77 in.) Cutouts
- Integral PC Board Guides
- Fixed and Pluggable Terminals
- Standard Color: Light Gray Cover with Black Base

74-84

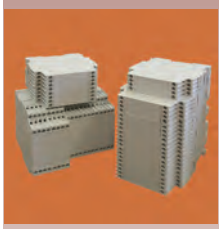

## KO4300

The KO4300 series offers new design styling and cost effectiveness in a high density compact package. The double level terminals offer space savings while providing gas-tight, vibration proof connections. The enclosures are available with 16 to 64 terminals in 22.5 to 90 mm widths.

- DIN Rail Mount
- Machine Solderable Pins
- Integral PC Board Guides
- Compact High Density Design
- Standard Color: Light Gray

85-89

## KO4070

Compact, cost effective enclosures are ideal for I/O circuits, relays, timers and other small control devices. The KO4070 series enclosures are available in three widths with single and multi-level terminals. They are supplied complete with 4 to 16 box clamp type terminals that are machine solderable.

- DIN Rail Mount
- Machine Solderable Terminals
- Compact, Snap-Together
- Integral PC Board Guides
- Standard Color: Light Gray

90-95

In-Rail Busbar System ..... 96
Index ..... 97
Terms & Conditions ..... 98

# KS4400 Series

The KS4400 series is simple, modular and flexible yet highly functional. The half shell design is cost effective and provides exceptional space utilization. Three levels of terminals with fixed and pluggable PCB terminal options allow for high density connections. A large front face area provides ample space for operator, communication and visual display components.

## MATERIALS

*Housing*

Housing Shell: Polyamide, Glass Filled; Front Plate: PBT

*Terminals*

Housing: Polyamide; Terminal Pins: Tinned Brass

**Temperature Rating:** 120°C (248°F) UL94V0

**Standard Color:** Black Housing with Gray Front Plate
Other colors are available upon request.

## PROTECTION

KS4400 enclosures have an IP40 rating, IP20 for terminal openings (finger protected) and meet VBG4 and other European accident prevention requirements.

## CONSTRUCTION

The KS4400 enclosure series housings are supplied as unassembled kits. Each kit consists of two half shells, a front plate, DIN rail clip and terminal sets. The terminals are set on three levels to maximize space. The terminals are machine solderable with right angle pins. PC boards are mounted vertically in the enclosure, perpendicular to the DIN rail.

## TERMINALS

The terminals are available as fixed or pluggable PCB terminals. The terminal blocks are all machine solderable. Fixed PCB terminals are standard screw cage clamp style terminal blocks.
Pluggable PCB terminals feature male pin headers and female screw cage clamp or spring cage clamp plugs that can be plugged/unplugged. Terminal spaces can also be left blank and covered with a snap in cover (terminal blanking plug).

## MOUNTING

The KS4400 series can easily be mounted on standard 35mm DIN rail by means of the integral mounting foot and DIN clip.

## MARKING

The KS4400 series have large marking areas on the front of the cover.

## CUSTOMIZATION

We can supply the KS4400 series enclosures with many custom options including:

- Partial or mixed terminal loading
- Enclosure bus connections
- Machining of custom holes
- Front cover with test buttons
- Printing/Marking
- Ventilation Slots
- Hinged front covers

## ASSEMBLY OF ENCLOSURE

1. With terminals fitted, place the PCB in the first enclosure half shell.
2. Slide the front plate in the slot in the first enclosure half shell.
3. Place this assembly flat and line-up the second half shell so that the front plate slides into the slot.
4. Manually close both half shells until they snap together.
5. Insert the DIN rail mounting clip into the base of the enclosure.

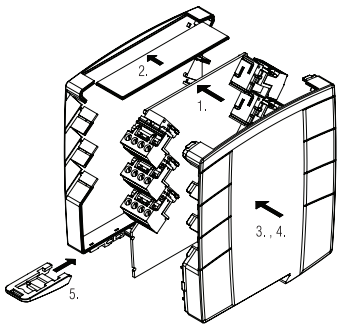


## ACCESSORIES AND OPTIONS

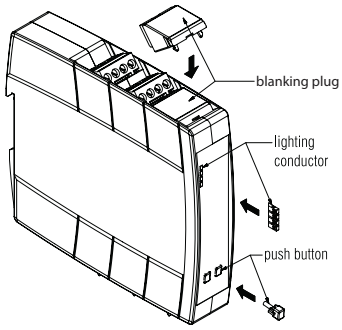


Application Example

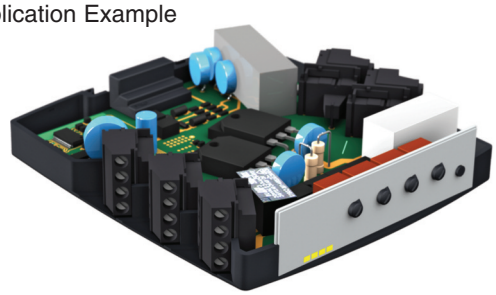

## 8 Terminal
### Screw Terminals

### TECHNICAL INFORMATION

**Electrical:**
10A, 300V, 20-14AWG
**Materials:**
Housing - PA
Hinged Front Plate - PC
**Temperature Range:**
Up to 105°C (221°F)
**Flammability Rating:**
UL94 V-O Housing
UL94 V-2 Front Plate

***Color:** Black Housing
Transparent Cover Plate
**Terminal Type:**
Screw
**Terminal Screw Size:** M3.5
**Recommended Torque:**
0.6Nm
**Max. PCB's:**
(1) Vertical
**Mounting:**
35mm DIN Rail

### ORDERING INFORMATION

| Part Number | Type | Terminals | PCB Connection |
|---|---|---|---|
| 90.110 | KS4460 | Screw | Solder Pin |

### ACCESSORIES

| Accessories | Part Number | Type |
|---|---|---|
| 1 Meter DIN Rail | 2511120/1M | TS35x7.5/1M |
| Light Pipes, 3mm Grid | 90.191 | KS4400-7-1 |
| Light Pipes, 5mm Grid | 90.192 | KS4400-6-1 |

### ENCLOSURE DRAWING (To convert to inches divide by 25.4.)

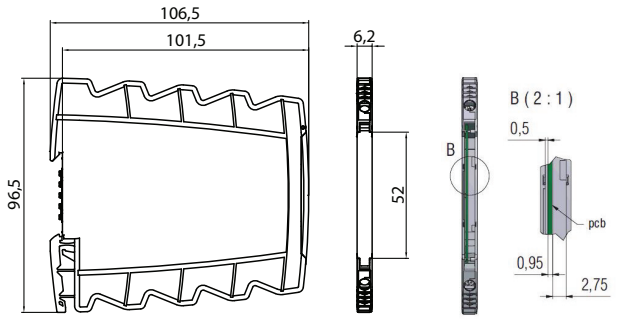


### PCB DRAWING (To convert to inches divide by 25.4.)

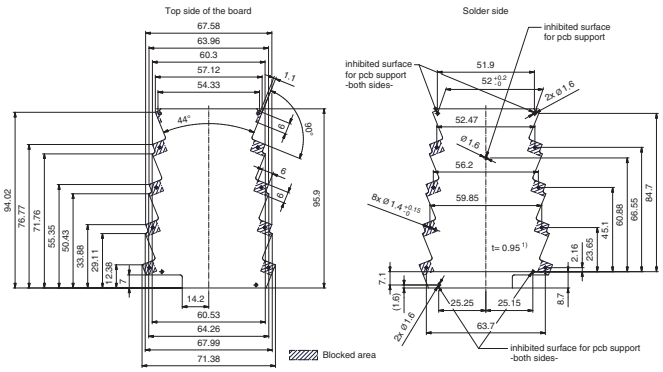


*Other colors are available upon request.

## 8 Terminal
### Spring Terminals

### TECHNICAL INFORMATION

**Electrical:**
10A, 300V, 20-14AWG
**Materials:**
Housing - PA
Hinged Front Plate - PC
**Temperature Range:**
Up to 105°C (221°F)
**Flammability Rating:**
UL94 V-O Housing
UL94 V-2 Front Plate

***Color:** Black Housing
Transparent Cover Plate
**Terminal Type:**
Spring
**Terminal Screw Size:** –
**Recommended Torque:** –
**Max. PCB's:**
(1) Vertical
**Mounting:**
35mm DIN Rail

### ORDERING INFORMATION

| Part Number | Type | Terminals | PCB Connection |
|---|---|---|---|
| 90.115 | KS4460 | Spring | Solder Pin |

### ACCESSORIES

| Accessories | Part Number | Type |
|---|---|---|
| 1 Meter DIN Rail | 2511120/1M | TS35x7.5/1M |
| Light Pipes, 3mm Grid | 90.191 | KS4400-7-1 |
| Light Pipes, 5mm Grid | 90.192 | KS4400-6-1 |

### ENCLOSURE DRAWING (To convert to inches divide by 25.4.)

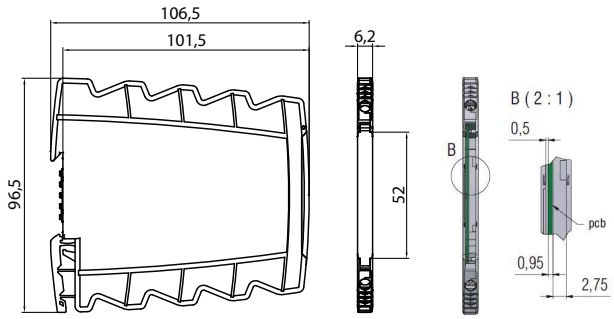


### PCB DRAWING (To convert to inches divide by 25.4.)

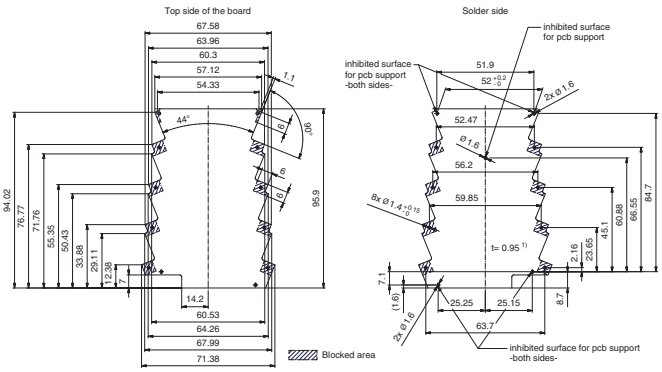

## 12 Terminal

### Fixed Terminals

### TECHNICAL INFORMATION

**Electrical:**
10A, 300V, 22-14AWG
**Materials:**
Housing - PA-GF
Front Plate - PBT
Terminals - PA
**Temperature Range:**
Up to 120°C (248°F)
**Flammability Rating:**
UL94 V-O

***Color:** Black Housing
Gray Cover Plate
**Terminal Type:**
Fixed Screw
**Terminal Screw Size:** M2.5
**Recommended Torque:**
0.5Nm
**Max. PCB's:**
(1) Vertical
**Mounting:**
35mm DIN Rail

### ORDERING INFORMATION

| Part Number | Type | Terminals | PCB Connection |
|---|---|---|---|
| 90.120 | KS4401/F | Fixed Screw | Machine Solder |

### ACCESSORIES

| Accessories | Part Number | Type |
|---|---|---|
| 1 Meter DIN Rail | 2511120/1M | TS35x7.5/1M |
| Terminal Blanking Plug | 90.190 | KS4403-5-1 |
| Light Pipes, 3mm Grid | 90.191 | KS4400-7-1 |
| Light Pipes, 5mm Grid | 90.192 | KS4400-6-1 |

### ENCLOSURE DRAWING (To convert to inches divide by 25.4.)

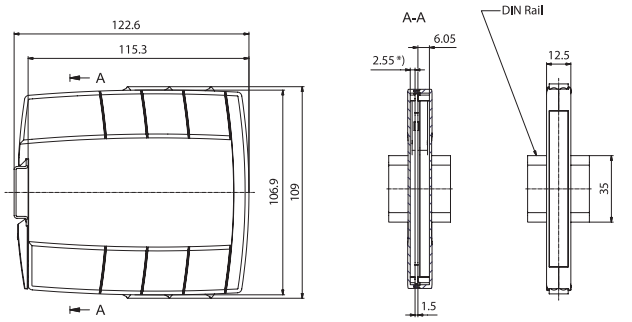


*) 3.05 with printed circuit board thickness t = 1 mm

### PCB DRAWING (To convert to inches divide by 25.4.)

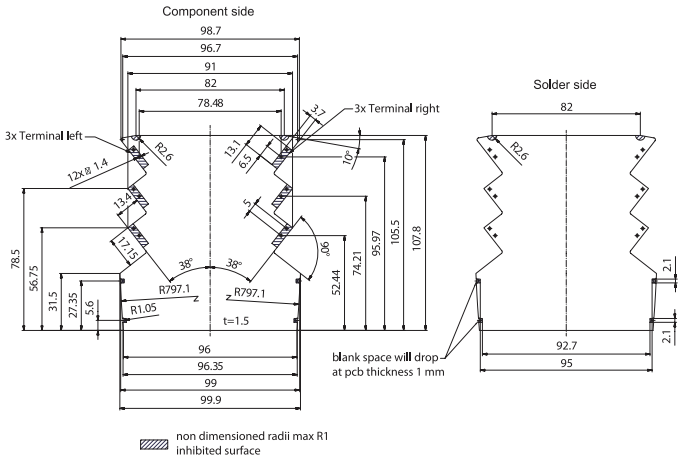


*Other colors are available upon request.

## 12 Terminal

### Pluggable Terminals

### TECHNICAL INFORMATION

**Electrical:**
10A, 300V, 30-12AWG (Screw);
10A, 300V, 26-12AWG (Spring)
**Materials:**
Housing - PA-GF
Front Plate - PBT
Terminals - PA
**Temperature Range:**
Up to 120°C (248°F)
**Flammability Rating:**
UL94 V-O

***Color:** Black Housing
Gray Cover Plate
**Terminal Type:**
Pluggable Screw /
Pluggable Spring
**Terminal Screw Size:** M2.5
**Recommended Torque:**
0.5Nm
**Max. PCB's:**
(1) Vertical
**Mounting:**
35mm DIN Rail

### ORDERING INFORMATION

| Part Number | Type | Terminals | PCB Connection |
|---|---|---|---|
| 90.121 | KS4401/PS | Pluggable Screw | Machine Solder |
| 90.122 | KS4401/PC | Pluggable Spring | Machine Solder |

### ACCESSORIES

| Accessories | Part Number | Type |
|---|---|---|
| 1 Meter DIN Rail | 2511120/1M | TS35x7.5/1M |
| Terminal Blanking Plug | 90.190 | KS4403-5-1 |
| Light Pipes, 3mm Grid | 90.191 | KS4400-7-1 |
| Light Pipes, 5mm Grid | 90.192 | KS4400-6-1 |

### ENCLOSURE DRAWING (To convert to inches divide by 25.4.)

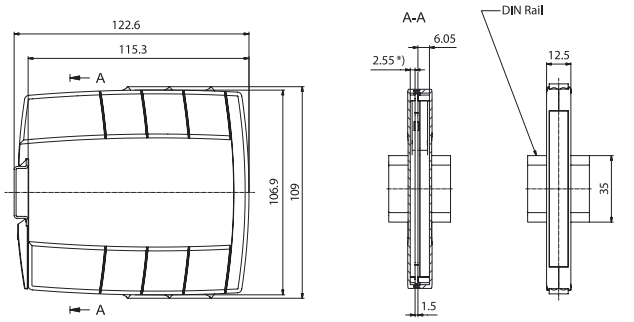


*) 3.05 with printed circuit board thickness t = 1 mm

### PCB DRAWING (To convert to inches divide by 25.4.)

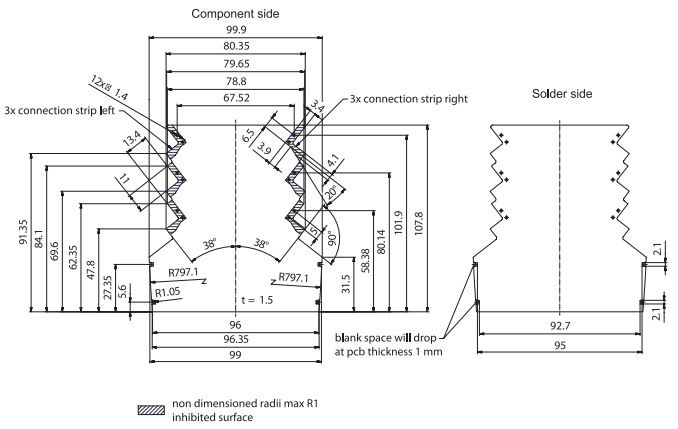

## 18 Terminal
### Fixed Terminals

### TECHNICAL INFORMATION

**Electrical:**
10A, 300V, 22-14AWG
**Materials:**
Housing - PA-GF
Front Plate - PBT
Terminals - PA
**Temperature Range:**
Up to 120°C (248°F)
**Flammability Rating:**
UL94 V-O

***Color:** Black Housing
Gray Cover Plate
**Terminal Type:**
Fixed Screw
**Terminal Screw Size:** M2.5
**Recommended Torque:**
0.5Nm
**Max. PCB's:**
(1) Vertical
**Mounting:**
35mm DIN Rail

### ORDERING INFORMATION

| Part Number | Type | Terminals | PCB Connection |
|---|---|---|---|
| 90.130 | KS4402/F | Fixed Screw | Machine Solder |

### ACCESSORIES

| Accessories | Part Number | Type |
|---|---|---|
| 1 Meter DIN Rail | 2511120/1M | TS35x7.5/1M |
| Terminal Blanking Plug | 90.190 | KS4403-5-1 |
| Light Pipes, 3mm Grid | 90.191 | KS4400-7-1 |
| Light Pipes, 5mm Grid | 90.192 | KS4400-6-1 |

### ENCLOSURE DRAWING (To convert to inches divide by 25.4.)

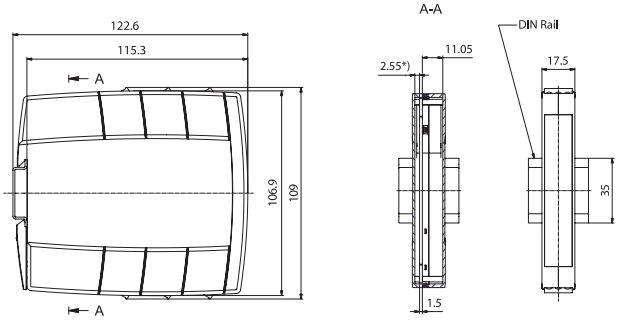


*) 3.05 with printed circuit board thickness t = 1 mm

### PCB DRAWING (To convert to inches divide by 25.4.)

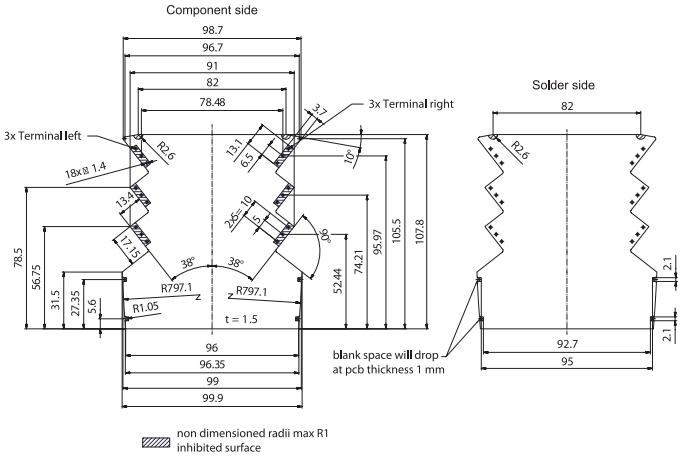


*Other colors are available upon request.

## 18 Terminal
### Pluggable Terminals

### TECHNICAL INFORMATION

**Electrical:**
10A, 300V, 30-12AWG (Screw);
10A, 300V, 26-12AWG (Spring)
**Materials:**
Housing - PA-GF
Front Plate - PBT
Terminals - PA
**Temperature Range:**
Up to 120°C (248°F)
**Flammability Rating:**
UL94 V-O

***Color:** Black Housing
Gray Cover Plate
**Terminal Type:**
Pluggable Screw /
Pluggable Spring
**Terminal Screw Size:** M2.5
**Recommended Torque:**
0.5Nm
**Max. PCB's:**
(1) Vertical
**Mounting:**
35mm DIN Rail

### ORDERING INFORMATION

| Part Number | Type | Terminals | PCB Connection |
|---|---|---|---|
| 90.131 | KS4402/PS | Pluggable Screw | Machine Solder |
| 90.132 | KS4402/PC | Pluggable Spring | Machine Solder |

### ACCESSORIES

| Accessories | Part Number | Type |
|---|---|---|
| 1 Meter DIN Rail | 2511120/1M | TS35x7.5/1M |
| Terminal Blanking Plug | 90.190 | KS4403-5-1 |
| Light Pipes, 3mm Grid | 90.191 | KS4400-7-1 |
| Light Pipes, 5mm Grid | 90.192 | KS4400-6-1 |

### ENCLOSURE DRAWING (To convert to inches divide by 25.4.)

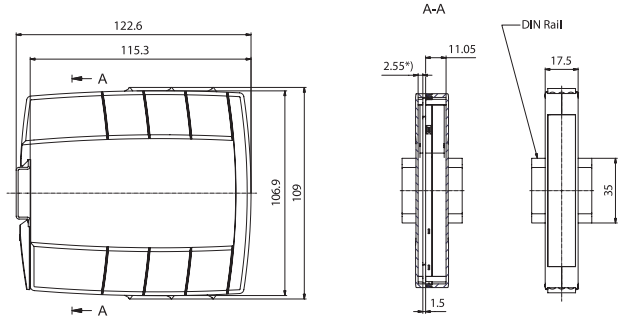


*) 3.05 with printed circuit board thickness t = 1 mm

### PCB DRAWING (To convert to inches divide by 25.4.)

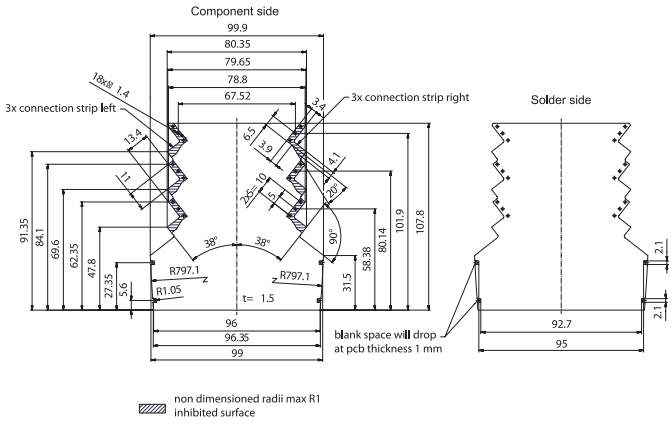

## 24 Terminal
### Fixed Terminals

### TECHNICAL INFORMATION

**Electrical:**
10A, 300V, 22-14AWG
**Materials:**
Housing - PA-GF
Front Plate - PBT
Terminals - PA
**Temperature Range:**
Up to 120°C (248°F)
**Flammability Rating:**
UL94 V-O

***Color:** Black Housing
Gray Cover Plate
**Terminal Type:**
Fixed Screw
**Terminal Screw Size:** M2.5
**Recommended Torque:**
0.5Nm
**Max. PCB's:**
(1) Vertical
**Mounting:**
35mm DIN Rail

### ORDERING INFORMATION

| Part Number | Type | Terminals | PCB Connection |
|---|---|---|---|
| 90.140 | KS4403/F | Fixed Screw | Machine Solder |

### ACCESSORIES

| Accessories | Part Number | Type |
|---|---|---|
| 1 Meter DIN Rail | 2511120/1M | TS35x7.5/1M |
| Terminal Blanking Plug | 90.190 | KS4403-5-1 |
| Light Pipes, 3mm Grid | 90.191 | KS4400-7-1 |
| Light Pipes, 5mm Grid | 90.192 | KS4400-6-1 |

### ENCLOSURE DRAWING (To convert to inches divide by 25.4.)

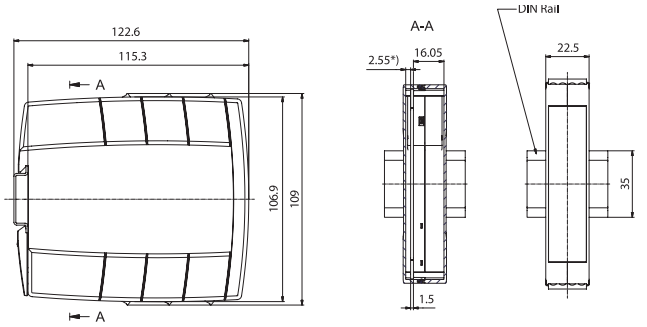


*) 3.05 with printed circuit board thickness t = 1 mm

### PCB DRAWING (To convert to inches divide by 25.4.)

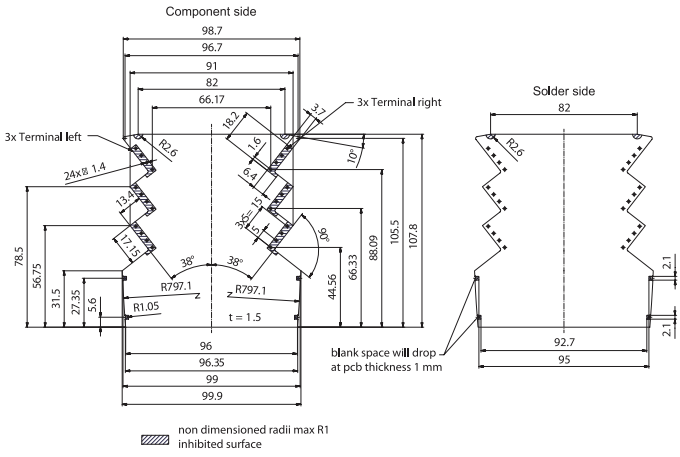


*Other colors are available upon request.

## 24 Terminal
### Pluggable Terminals

### TECHNICAL INFORMATION

**Electrical:**
10A, 300V, 30-12AWG (Screw);
10A, 300V, 26-12AWG (Spring)
**Materials:**
Housing - PA-GF
Front Plate - PBT
Terminals - PA
**Temperature Range:**
Up to 120°C (248°F)
**Flammability Rating:**
UL94 V-O

***Color:** Black Housing
Gray Cover Plate
**Terminal Type:**
Pluggable Screw /
Pluggable Spring
**Terminal Screw Size:** M2.5
**Recommended Torque:**
0.5Nm
**Max. PCB's:**
(1) Vertical
**Mounting:**
35mm DIN Rail

### ORDERING INFORMATION

| Part Number | Type | Terminals | PCB Connection |
|---|---|---|---|
| 90.141 | KS4403/PS | Pluggable Screw | Machine Solder |
| 90.142 | KS4403/PC | Pluggable Spring | Machine Solder |

### ACCESSORIES

| Accessories | Part Number | Type |
|---|---|---|
| 1 Meter DIN Rail | 2511120/1M | TS35x7.5/1M |
| Terminal Blanking Plug | 90.190 | KS4403-5-1 |
| Light Pipes, 3mm Grid | 90.191 | KS4400-7-1 |
| Light Pipes, 5mm Grid | 90.192 | KS4400-6-1 |

### ENCLOSURE DRAWING (To convert to inches divide by 25.4.)

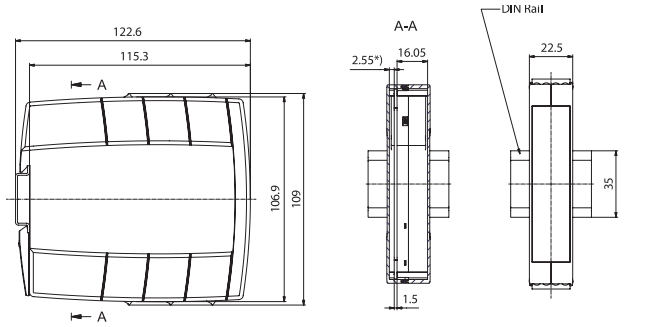


*) 3.05 with printed circuit board thickness t = 1 mm

### PCB DRAWING (To convert to inches divide by 25.4.)

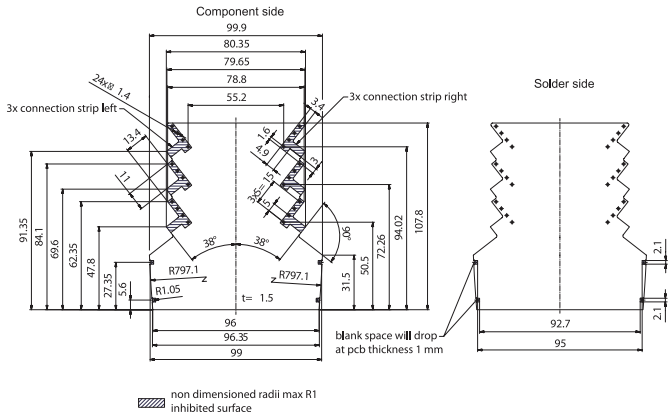

## 36 Terminal
### Fixed Terminals

### TECHNICAL INFORMATION

**Electrical:**
10A, 300V, 22-14AWG
**Materials:**
Housing - PA-GF
Front Plate - PBT
Terminals - PA
**Temperature Range:**
Up to 120°C (248°F)
**Flammability Rating:**
UL94 V-O

***Color:** Black Housing
Gray Cover Plate
**Terminal Type:**
Fixed Screw
**Terminal Screw Size:** M2.5
**Recommended Torque:**
0.5Nm
**Max. PCB's:**
(2) Vertical
**Mounting:**
35mm DIN Rail

### ORDERING INFORMATION

| Part Number | Type | Terminals | PCB Connection |
|---|---|---|---|
| 90.150 | KS4461/F | Fixed Screw | Machine Solder |

### ACCESSORIES

| Accessories | Part Number | Type |
|---|---|---|
| 1 Meter DIN Rail | 2511120/1M | TS35x7.5/1M |
| Terminal Blanking Plug | 90.190 | KS4403-5-1 |
| Light Pipes, 3mm Grid | 90.191 | KS4400-7-1 |
| Light Pipes, 5mm Grid | 90.192 | KS4400-6-1 |

### ENCLOSURE DRAWING (To convert to inches divide by 25.4.)

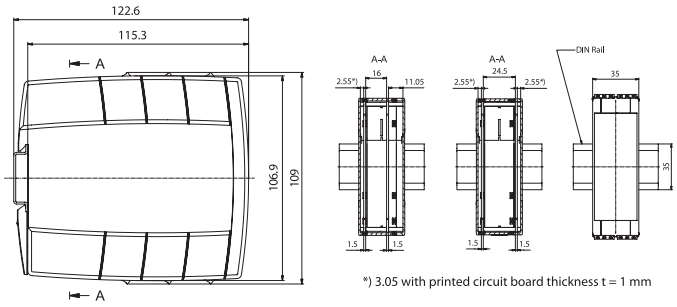


### PCB DRAWING (To convert to inches divide by 25.4.)

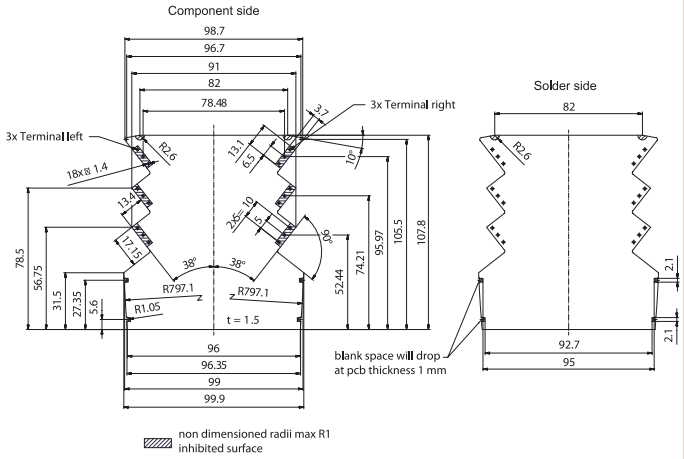


*Other colors are available upon request.

## 36 Terminal
### Pluggable Terminals

### TECHNICAL INFORMATION

**Electrical:**
10A, 300V, 30-12AWG (Screw);
10A, 300V, 26-12AWG (Spring)
**Materials:**
Housing - PA-GF
Front Plate - PBT
Terminals - PA
**Temperature Range:**
Up to 120°C (248°F)
**Flammability Rating:**
UL94 V-O

***Color:** Black Housing
Gray Cover Plate
**Terminal Type:**
Pluggable Screw /
Pluggable Spring
**Terminal Screw Size:** M2.5
**Recommended Torque:**
0.5Nm
**Max. PCB's:**
(2) Vertical
**Mounting:**
35mm DIN Rail

### ORDERING INFORMATION

| Part Number | Type | Terminals | PCB Connection |
|---|---|---|---|
| 90.151 | KS4461/PS | Pluggable Screw | Machine Solder |
| 90.152 | KS4461/PC | Pluggable Spring | Machine Solder |

### ACCESSORIES

| Accessories | Part Number | Type |
|---|---|---|
| 1 Meter DIN Rail | 2511120/1M | TS35x7.5/1M |
| Terminal Blanking Plug | 90.190 | KS4403-5-1 |
| Light Pipes, 3mm Grid | 90.191 | KS4400-7-1 |
| Light Pipes, 5mm Grid | 90.192 | KS4400-6-1 |

### ENCLOSURE DRAWING (To convert to inches divide by 25.4.)

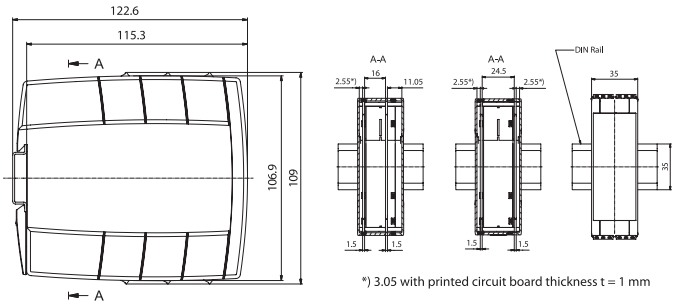


### PCB DRAWING (To convert to inches divide by 25.4.)

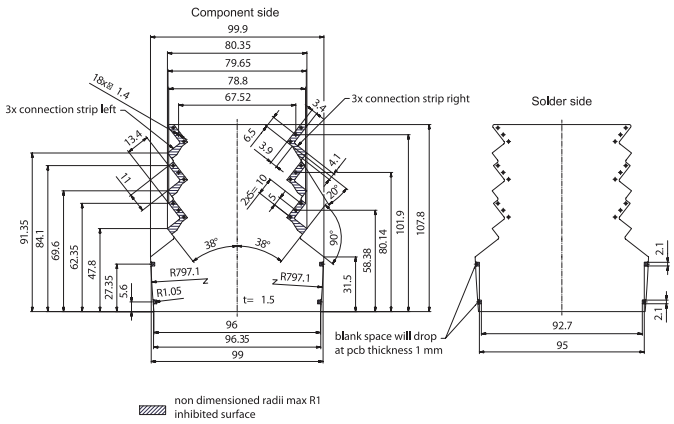

## 48 Terminal
### Fixed Terminals

### TECHNICAL INFORMATION

**Electrical:**
10A, 300V, 22-14AWG
**Materials:**
Housing - PA-GF
Front Plate - PBT
Terminals - PA
**Temperature Range:**
Up to 120°C (248°F)
**Flammability Rating:**
UL94 V-O

***Color:** Black Housing
Gray Cover Plate
**Terminal Type:**
Fixed Screw
**Terminal Screw Size:** M2.5
**Recommended Torque:**
0.5Nm
**Max. PCB's:**
(2) Vertical
**Mounting:**
35mm DIN Rail

### ORDERING INFORMATION

| Part Number | Type | Terminals | PCB Connection |
|---|---|---|---|
| 90.160 | KS4404/F | Fixed Screw | Machine Solder |

### ACCESSORIES

| Accessories | Part Number | Type |
|---|---|---|
| 1 Meter DIN Rail | 2511120/1M | TS35x7.5/1M |
| Terminal Blanking Plug | 90.190 | KS4403-5-1 |
| Light Pipes, 3mm Grid | 90.191 | KS4400-7-1 |
| Light Pipes, 5mm Grid | 90.192 | KS4400-6-1 |

### ENCLOSURE DRAWING (To convert to inches divide by 25.4.)

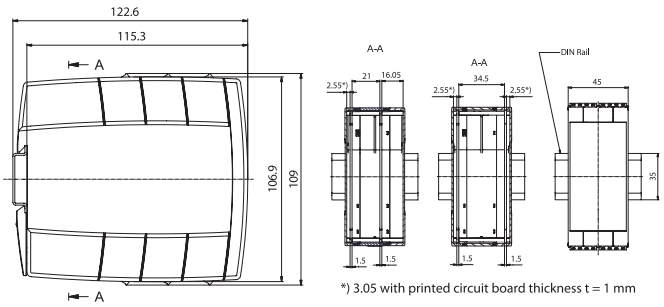


### PCB DRAWING (To convert to inches divide by 25.4.)

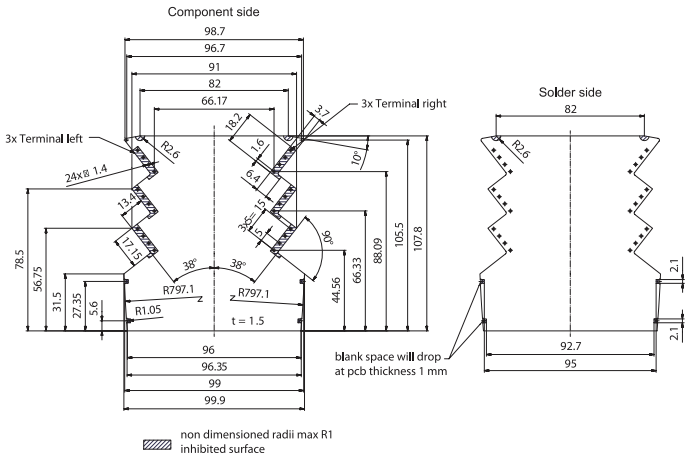


*Other colors are available upon request.

## 48 Terminal
### Pluggable Terminals

### TECHNICAL INFORMATION

**Electrical:**
10A, 300V, 30-12AWG (Screw);
10A, 300V, 26-12AWG (Spring)
**Materials:**
Housing - PA-GF
Front Plate - PBT
Terminals - PA
**Temperature Range:**
Up to 120°C (248°F)
**Flammability Rating:**
UL94 V-O

***Color:** Black Housing
Gray Cover Plate
**Terminal Type:**
Pluggable Screw /
Pluggable Spring
**Terminal Screw Size:** M2.5
**Recommended Torque:**
0.5Nm
**Max. PCB's:**
(2) Vertical
**Mounting:**
35mm DIN Rail

### ORDERING INFORMATION

| Part Number | Type | Terminals | PCB Connection |
|---|---|---|---|
| 90.161 | KS4404/PS | Pluggable Screw | Machine Solder |
| 90.162 | KS4404/PC | Pluggable Spring | Machine Solder |

### ACCESSORIES

| Accessories | Part Number | Type |
|---|---|---|
| 1 Meter DIN Rail | 2511120/1M | TS35x7.5/1M |
| Terminal Blanking Plug | 90.190 | KS4403-5-1 |
| Light Pipes, 3mm Grid | 90.191 | KS4400-7-1 |
| Light Pipes, 5mm Grid | 90.192 | KS4400-6-1 |

### ENCLOSURE DRAWING (To convert to inches divide by 25.4.)

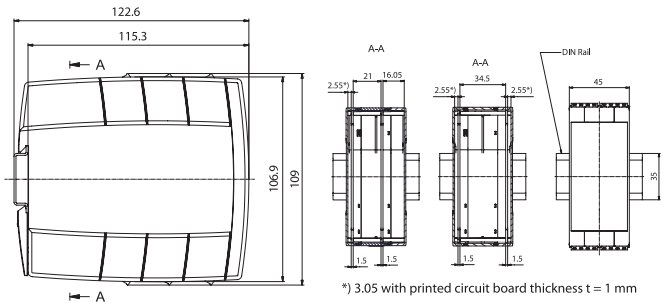


### PCB DRAWING (To convert to inches divide by 25.4.)

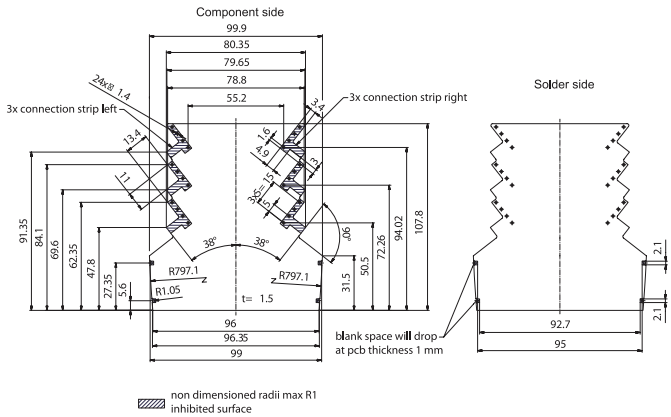

## 72 Terminal
### Fixed Terminals

### TECHNICAL INFORMATION

**Electrical:**
10A, 300V, 22-14AWG
**Materials:**
Housing - PA-GF
Front Plate - PBT
Terminals - PA
**Temperature Range:**
Up to 120°C (248°F)
**Flammability Rating:**
UL94 V-O

***Color:** Black Housing
Gray Cover Plate
**Terminal Type:**
Fixed Screw
**Terminal Screw Size:** M2.5
**Recommended Torque:**
0.5Nm
**Max. PCB's:**
(3) Vertical
**Mounting:**
35mm DIN Rail

### ORDERING INFORMATION

| Part Number | Type | Terminals | PCB Connection |
|---|---|---|---|
| 90.170 | KS4405/F | Fixed Screw | Machine Solder |

### ACCESSORIES

| Accessories | Part Number | Type |
|---|---|---|
| 1 Meter DIN Rail | 2511120/1M | TS35x7.5/1M |
| Terminal Blanking Plug | 90.190 | KS4403-5-1 |
| Light Pipes, 3mm Grid | 90.191 | KS4400-7-1 |
| Light Pipes, 5mm Grid | 90.192 | KS4400-6-1 |

### ENCLOSURE DRAWING (To convert to inches divide by 25.4.)

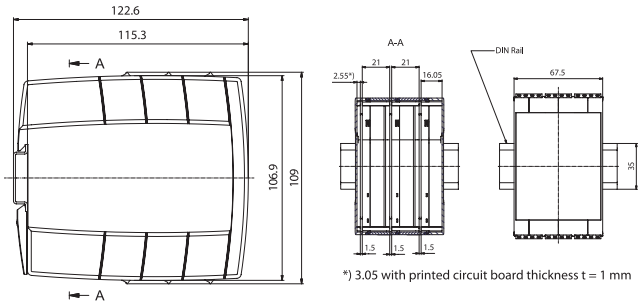


### PCB DRAWING (To convert to inches divide by 25.4.)

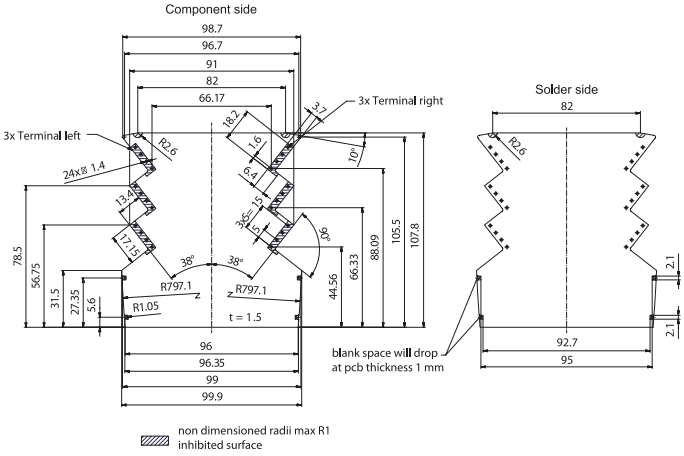


*Other colors are available upon request.

## 72 Terminal
### Pluggable Terminals

### TECHNICAL INFORMATION

**Electrical:**
10A, 300V, 30-12AWG (Screw);
10A, 300V, 26-12AWG (Spring)
**Materials:**
Housing - PA-GF
Front Plate - PBT
Terminals - PA
**Temperature Range:**
Up to 120°C (248°F)
**Flammability Rating:**
UL94 V-O

***Color:** Black Housing
Gray Cover Plate
**Terminal Type:**
Pluggable Screw /
Pluggable Spring
**Terminal Screw Size:** M2.5
**Recommended Torque:**
0.5Nm
**Max. PCB's:**
(3) Vertical
**Mounting:**
35mm DIN Rail

### ORDERING INFORMATION

| Part Number | Type | Terminals | PCB Connection |
|---|---|---|---|
| 90.171 | KS4405/PS | Pluggable Screw | Machine Solder |
| 90.172 | KS4405/PC | Pluggable Spring | Machine Solder |

### ACCESSORIES

| Accessories | Part Number | Type |
|---|---|---|
| 1 Meter DIN Rail | 2511120/1M | TS35x7.5/1M |
| Terminal Blanking Plug | 90.190 | KS4403-5-1 |
| Light Pipes, 3mm Grid | 90.191 | KS4400-7-1 |
| Light Pipes, 5mm Grid | 90.192 | KS4400-6-1 |

### ENCLOSURE DRAWING (To convert to inches divide by 25.4.)

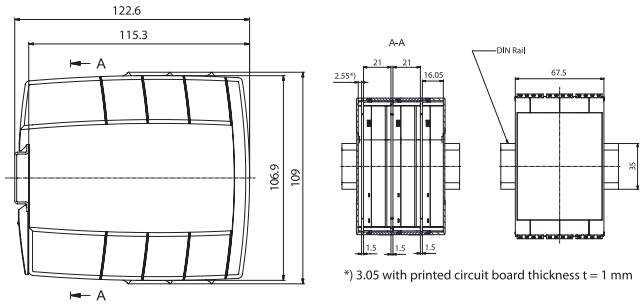


### PCB DRAWING (To convert to inches divide by 25.4.)

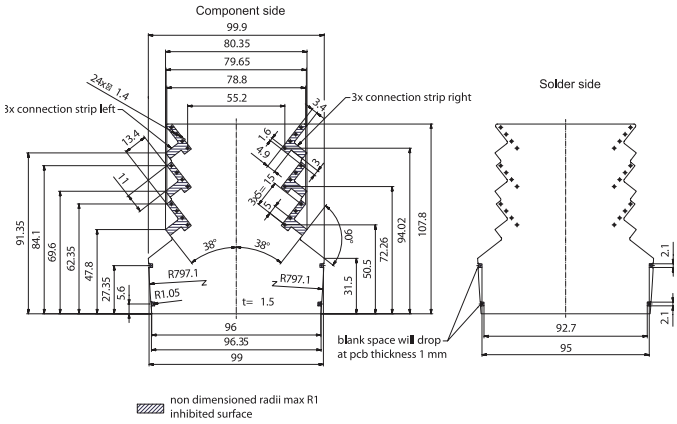

## 96 Terminal
### Fixed Terminals

### TECHNICAL INFORMATION

**Electrical:**
10A, 300V, 22-14AWG
**Materials:**
Housing - PA-GF
Front Plate - PBT
Terminals - PA
**Temperature Range:**
Up to 120°C (248°F)
**Flammability Rating:**
UL94 V-O

***Color:** Black Housing
Gray Cover Plate
**Terminal Type:**
Fixed Screw
**Terminal Screw Size:** M2.5
**Recommended Torque:**
0.5Nm
**Max. PCB's:**
(4) Vertical
**Mounting:**
35mm DIN Rail

### ORDERING INFORMATION

| Part Number | Type | Terminals | PCB Connection |
|---|---|---|---|
| 90.180 | KS4406/F | Fixed Screw | Machine Solder |

### ACCESSORIES

| Accessories | Part Number | Type |
|---|---|---|
| 1 Meter DIN Rail | 2511120/1M | TS35x7.5/1M |
| Terminal Blanking Plug | 90.190 | KS4403-5-1 |
| Light Pipes, 3mm Grid | 90.191 | KS4400-7-1 |
| Light Pipes, 5mm Grid | 90.192 | KS4400-6-1 |

### ENCLOSURE DRAWING (To convert to inches divide by 25.4.)

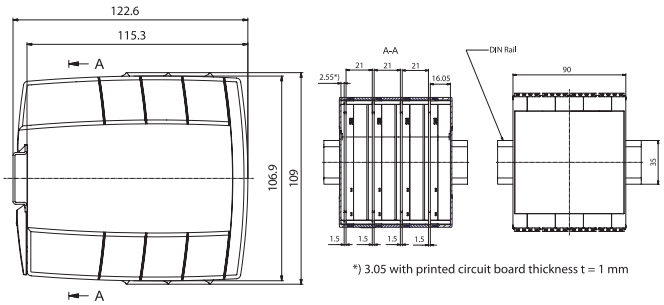


### PCB DRAWING (To convert to inches divide by 25.4.)

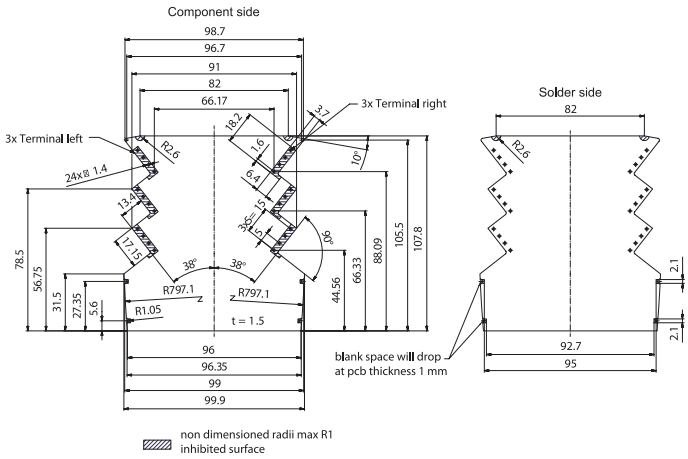


*Other colors are available upon request.

## 96 Terminal
### Pluggable Terminals

### TECHNICAL INFORMATION

**Electrical:**
10A, 300V, 30-12AWG (Screw);
10A, 300V, 26-12AWG (Spring)
**Materials:**
Housing - PA-GF
Front Plate - PBT
Terminals - PA
**Temperature Range:**
Up to 120°C (248°F)
**Flammability Rating:**
UL94 V-O

***Color:** Black Housing
Gray Cover Plate
**Terminal Type:**
Pluggable Screw /
Pluggable Spring
**Terminal Screw Size:** M2.5
**Recommended Torque:**
0.5Nm
**Max. PCB's:**
(4) Vertical
**Mounting:**
35mm DIN Rail

### ORDERING INFORMATION

| Part Number | Type | Terminals | PCB Connection |
|---|---|---|---|
| 90.181 | KS4406/PS | Pluggable Screw | Machine Solder |
| 90.182 | KS4406/PC | Pluggable Spring | Machine Solder |

### ACCESSORIES

| Accessories | Part Number | Type |
|---|---|---|
| 1 Meter DIN Rail | 2511120/1M | TS35x7.5/1M |
| Terminal Blanking Plug | 90.190 | KS4403-5-1 |
| Light Pipes, 3mm Grid | 90.191 | KS4400-7-1 |
| Light Pipes, 5mm Grid | 90.192 | KS4400-6-1 |

### ENCLOSURE DRAWING (To convert to inches divide by 25.4.)

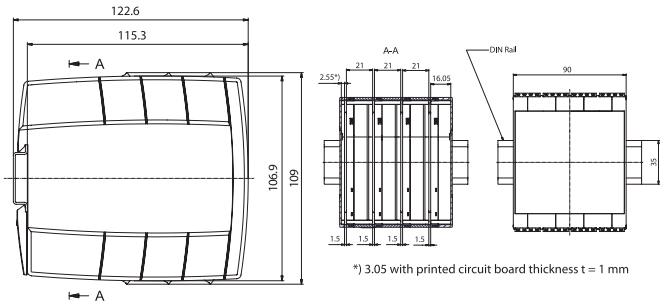


### PCB DRAWING (To convert to inches divide by 25.4.)

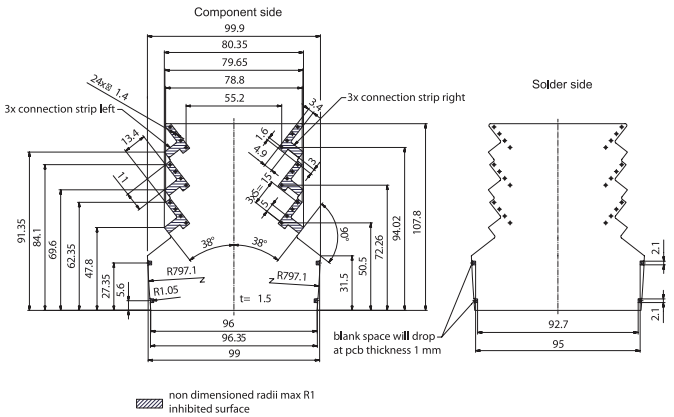

# KO4700 Series

Ideal for industrial applications. Small to large in size, KO4700 enclosures can accommodate 8 to132 terminals for field wire connections. Series KO4700 enclosures can be customized to the exact number of terminals required. Standard enclosures are equipped with the maximum number of terminal strips and terminals.The KO4700 series are available with two types of terminations for connecting external wires. The Pressure Plate type terminals,with a center line spacing of 9mm (.35 in.) and the Box Clamp design, which has a 5mm (.19 in.) center line spacing for much higher density.

## MATERIALS

### *Housing*

Housing Shell: Polycarbonate, 10% Glass Filled
Cover: Polycarbonate, 10% Glass Filled
Cover Panel: Clear Polycarbonate or Glass Filled Polycarbonate

### *Terminals*

Pressure Plate: Zinc Plated, Chromated Steel
Terminal Screw: Zinc Plated, Chromated Steel
Clamp: Nickel Plated Brass
Busbar: Tin Plated Bronze
Connector Contact: Beryllium Copper, Tin Plated
(gold plating available)

### Temperature Rating:

125°C (257°F), UL94VO
Housing Shell Color: Black
Terminal Cover Color: Tan

## PROTECTION

KO4700 enclosures have an IP20 rating (finger protected) and meet VBG4 and other European accident prevention requirements.

## CONSTRUCTION

The KO4700 enclosure series consists of a black housing shell and a tan cover with integral terminals and terminal-to-board connections. They are supplied unassembled.

The housing shell has molded printed circuit board guides to save time when inserting printed circuit boards, prevent misconnections and to keep the boards from moving. Integral tabs on the bottom of the shell further help to hold boards in place, eliminating lateral movement. KO4700 housing shells can be potted.

Printed circuit boards can be mounted in three ways:

- Behind the Front Cover
- Horizontally
- Vertically

Depending on the enclosure type, one board can be mounted directly behind the front cover (parallel to the DIN rail).Boards can also be mounted horizontally (parallel to the DIN rail) or vertically (perpendicular to the DIN rail). (Refer to the Ordering Pages for board patterns and location of board guides.)

The housing cover snaps onto the housing shell. Two keyed tabs lock the cover firmly in place. Removal of the cover is possible for service and repair.

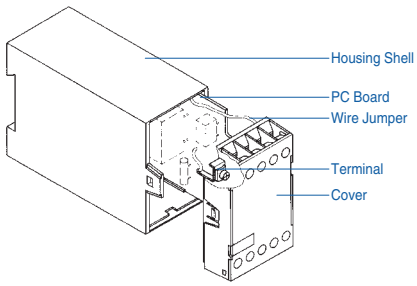


## COVER DESIGNS

Single piece, tan color covers are typically used with the smaller enclosures. They incorporate terminals and connections to the inside of the enclosure. In some of the smaller enclosures, the cover doubles as a plug. A printed circuit board can be mounted directly behind the front cover. This board is ideal for mounting components used for setting, adjusting and monitoring such as switches, potentiometer, LEDs and LCDs. There is no interferance with any other boards mounted within the enclosure.

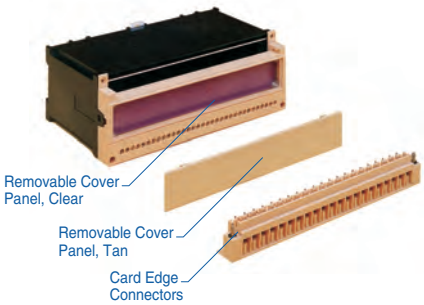


Modular covers consist of a one-piece tan frame with matching flat front panel. Some versions have a front cover panel that is removable and offered in matching tan or clear. The front covers can be custom imprinted or marking plates can be produced and installed behind the transparent front cover panel.

## TERMINAL DESIGNS

Select from Pressure Plate or Box Clamp terminals with wire protectors, and fixed or pluggable terminal-to-board connections. (Please refer to the Ordering Pages). Removable fixed or pluggable terminal strips can be replaced by terminal plugs if not all of the external connections of the standard enclosure are needed. The terminal screws used with both the pressure plate and box clamp designs can be operated with a flat tip or a #1 or #2 Philips type screwdriver.

### Pressure Plate Termination

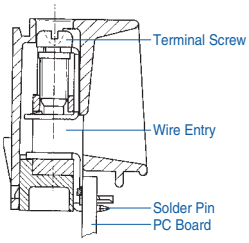


This type of terminal consists of a pressure plate (captive to the terminal screw) and the terminal bottom. The pressure plate rises automatically when the screw is loosened. One or two wires, of equal or different sizes up to 2.5mm² (14 AWG) can be terminated. The grooved corners of the pressure plate ensure positive retention of wire(s). The flat bottom of the terminal extends to the inside of the enclosure and connects the terminal to the board(s) inside.

### Box Clamp Termination

The box clamp terminal accepts wires up to 4mm² (12 AWG). When the terminal screw is tightened, the serrated bottom of the wire protector pushes the wire to be terminated against the serrated busbar. The busbar extends to the inside of the enclosure to provide the terminal-to-board connection.

## TERMINAL-TO-BOARD CONNECTIONS

The KO4700 Series offers fixed and pluggable terminal-to-board connection possibilities. (Please refer to the Ordering Pages on the following pages for your selection.)

### Fixed Connections

Fixed terminal-to-board connections can be made by Wire Jumper, Fast On tabs, Solder tabs, or Machine Solderable Pins.

**Fast On** tabs, 2.8mm (.11in.) accept industry standard Fast On connectors. Use with wire jumpers to connect to board(s).

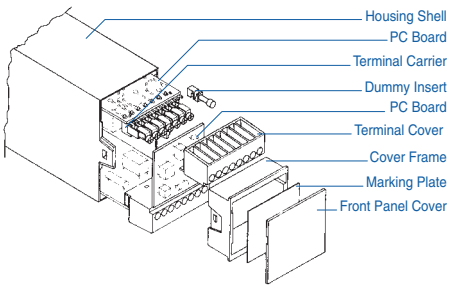


*Wire Jumper* connections can also be made by soldering a wire jumper between the center hole of the Fast On tab and the printed circuit board(s).
*Solder Tab* can be hand soldered to the board.

**Machine Solderable Pins** can be machine soldered to the board in the same step as the other components, saving assembly time. The metal parts of the terminals are supplied as separate strips which snap into the terminal housing after soldering.

### Pluggable Connections

The pluggable terminal strips of the KO4700 series fit across the width of the enclosure and plug directly into the board(s) by using a Card Edge connector. Enclosures equipped with pressure plate terminals also provide Solder Tabs for terminal-to-board connections when mounting an additional board directly behind the front cover. A Wire Jumper can be soldered to these tabs as well.

For better retention, the strips have captive screws at each end that insert into brass bushings, molded into the housing shell. The pluggable versions are ideal whenever quick connections and replacement of boards and devices is important. They also reduce the danger of misconnected wires and downtime.

## MOUNTING

The KO4700 Series enclosures are designed to be mounted on standard 35 x 7.5mm DIN rail but will also fit on the 35 x15mm DIN rail. The extra high enclosures should be mounted on the deeper, 35 x 15mm DIN rail. (Refer to the Ordering Pages on the following pages to determine the correct size rail for the enclosure you select.)

KO4700 series enclosures can also be panel mounted using pull-out tabs on the base of the enclosure. One tab is factory installed on each enclosure. Up to a total of 6 pull-out mounting tabs can be installed (See Accessories) (Refer to page 49 for mounting instructions.)

## MARKING

KO4700 enclosures have a flat center area on the cover for marking and mounting of components. Several types have removable front cover panels, which can be marked at a separate location. Imprinted marking plates can be used in conjunction with the transparent, removable cover panel.

## ACCESSORIES

- Terminal Cover Strips
- Pull-Out Panel Mounting Tabs
- Screws for Mounting Printed Circuit Board
- 35 x 7.5mm DIN Rail
- 35 x 15mm DIN Rail

## CUSTOMIZATION

Enclosures can be customized to the exact number of terminals needed. We can punch, drill or cut custom cutouts and holes for potentiometers, switches, LEDs or LDCs. Custom colors and special markings are also available. Please call us for further information.

## MODULAR ENCLOSURES *(pages 32-39)*

A group of modular enclosures is available in the KO4700 series. These enclosures can be ordered in a variety of terminal arrangements allowing for many different customized configurations. Terminal sets are available in 3, 4 and 7 pole blocks as well as blank blocks without terminals. High Current terminals are also available on some models. This modular terminal design allows anywhere from 0 to 56 terminals for field wire connections.

The KO4700 modular enclosures have the same design features of the standard series as well as the same materials. The terminals are of the box clamp style. The standard terminals feature pluggable connections while solder connections are used on the high current terminals. Printed circuit board placement is horizontal (parallel to the DIN rail) or vertical (perpendicular to the DIN rail).

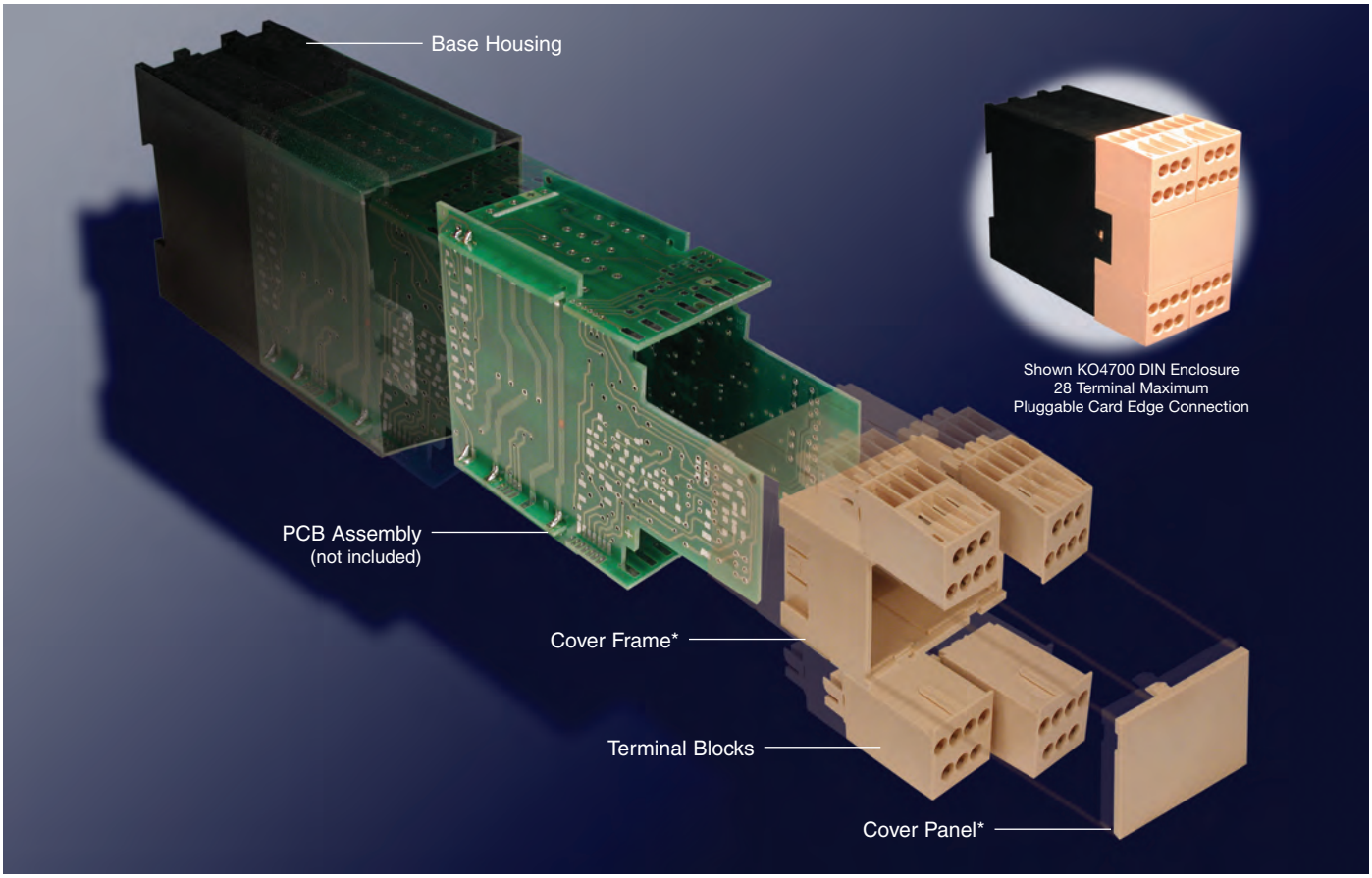


### Ordering Information

The modular enclosures are ordered in separate pieces. A complete enclosure consists of a base, cover frame*, cover panel* and the appropriate number of terminal blocks. Standard terminal blocks can be ordered as blank blocks with no termination points or with 3, 4, or 7 terminations. High current terminal blocks are available on some models. Theses blocks can also be ordered as blank blocks with no terminations or with 3 terminations. (Please refer to the Ordering Pages on the following pages for a list of how many blocks should be ordered per enclosure).

* High current versions have one piece center cover section instead of this two piece design.

## 8 Terminal
### Solder Connection

### TECHNICAL INFORMATION

**Electrical:**
16A, 300V, 22-12 AWG
**Housing Material:**
Glass-filled Polycarbonate
**Cover Material:**
Glass-filled Polycarbonate
**Temperature Range:**
Up to 125°C (257°F)
**Flammability Rating:**
UL94 V-O (V-2 Clear Panel)
**Color:**
Black Housing with Tan Cover

**Terminal Type:**
Box Clamp
**Terminal Screw Size:**
M3.5
**Recommended Torque:**
0.8Nm
**Max. PCB's:**
(2) Vertical
(1) Behind cover
**Mounting:**
35mm DIN Rail or optional panel mounting*

### ORDERING INFORMATION

| Part Number | Type | Description | PCB Connection |
|---|---|---|---|
| 90.201 | KO4712 | Solid Cover | Machine Solderable Pins |
| 90.201.1 | KO4712 | Removable Cover Panel, Tan | Machine Solderable Pins |
| 90.201.2 | KO4712 | Removable Cover Panel, Clear | Machine Solderable Pins |

### ACCESSORIES

| Accessories | Part Number | Type |
|---|---|---|
| 1 Meter DIN Rail | 2511120/1M | TS35x7.5/1M |
| *Panel Mount Tab | 93.001.2 | PMA |

### ENCLOSURE DRAWING (To convert to inches divide by 25.4.)

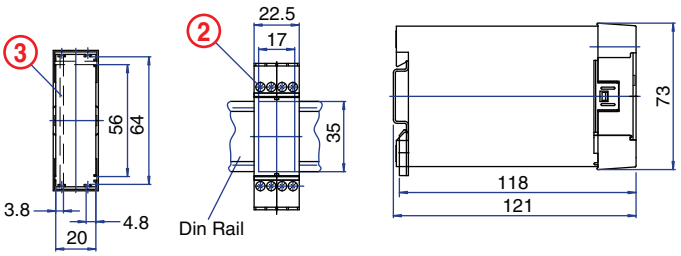


### PCB DRAWING (To convert to inches divide by 25.4.)

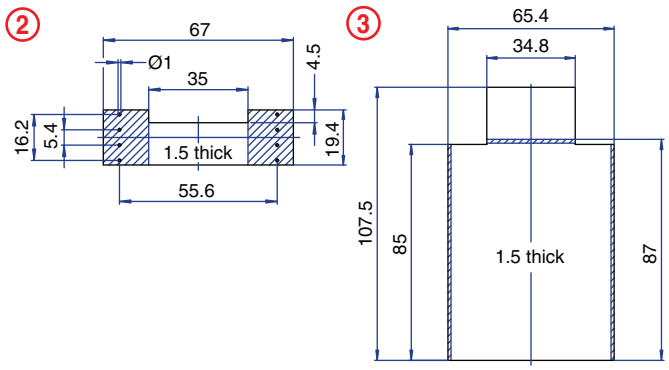


unused space

## 8 Terminal
### Solder/Tab Connection

### TECHNICAL INFORMATION

**Electrical:**
16A, 300V, 22-12 AWG
**Housing Material:**
Glass-filled Polycarbonate
**Cover Material:**
Glass-filled Polycarbonate
**Temperature Range:**
Up to 125°C (257°F)
**Flammability Rating:**
UL94 V-O (V-2 Clear Panel)
**Color:**
Black Housing with Tan Cover

**Terminal Type:**
Box Clamp
**Terminal Screw Size:**
M3.5
**Recommended Torque:**
0.8Nm
**Max. PCB's:**
(2) Vertical
**Mounting:**
35mm DIN Rail or optional panel mounting*

### ORDERING INFORMATION

| Part Number | Type | Description | PCB Connection |
|---|---|---|---|
| 90.202 | KO4712B | Solid Cover | Wire Jumper |
| 90.202.1 | KO4712B | Removable Cover Panel, Tan | Wire Jumper |
| 90.202.2 | KO4712B | Removable Cover Panel, Clear | Wire Jumper |

### ACCESSORIES

| Accessories | Part Number | Type |
|---|---|---|
| 1 Meter DIN Rail | 2511120/1M | TS35x7.5/1M |
| *Panel Mount Tab | 93.001.2 | PMA |

### ENCLOSURE DRAWING (To convert to inches divide by 25.4.)

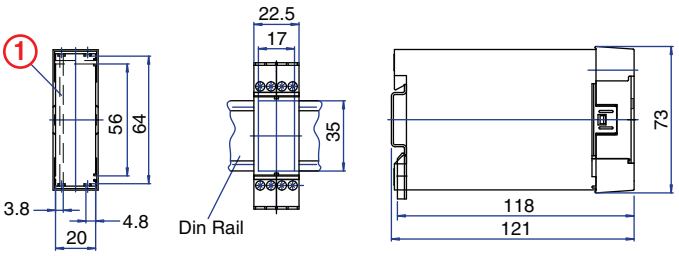


### PCB DRAWING (To convert to inches divide by 25.4.)

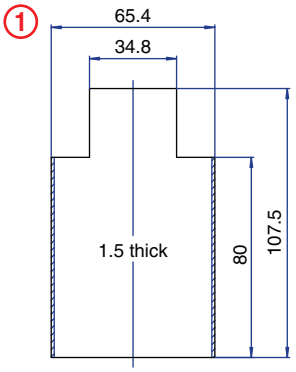


unused space

## 10 Terminal

**Spring Clamp**
**Solder/Tab Connection**

### TECHNICAL INFORMATION

**Electrical:**
16A, 300V, 24-14 AWG

**Housing Material:**
Glass-filled Polycarbonate

**Cover Material:**
Glass-filled Polycarbonate

**Temperature Range:**
Up to 125°C (257°F)

**Flammability Rating:**
UL94 V-O

**Color:**
Black Housing with Tan Cover

**Terminal Type:**
Spring Cage Clamp

**Terminal Screw Size:**
–

**Recommended Torque:**
–

**Max. PCB's:**
(2) Vertical

**Mounting:**
35mm DIN Rail

### ORDERING INFORMATION

| Part Number | Type | Description | PCB Connection |
|---|---|---|---|
| 90.215 | KO4761 | Solid Cover | Wire Jumper/ Fast On |

### ACCESSORIES

| Accessories | Part Number | Type |
|---|---|---|
| 1 Meter DIN Rail | 2511120/1M | TS35x7.5/1M |

### ENCLOSURE DRAWING (To convert to inches divide by 25.4.)

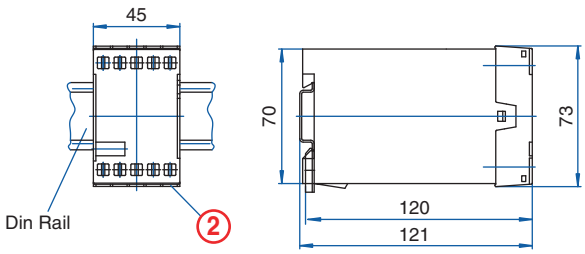


### PCB DRAWING (To convert to inches divide by 25.4.)

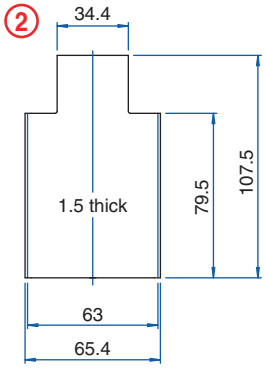


unused space

## 10 Terminal

**Solder/Tab**
**Connection**

### TECHNICAL INFORMATION

**Electrical:**
25A, 300V, 22-14 AWG

**Housing Material:**
Glass-filled Polycarbonate

**Cover Material:**
Glass-filled Polycarbonate

**Temperature Range:**
Up to 125°C (257°F)

**Flammability Rating:**
UL94 V-O

**Color:**
Black Housing with Tan Cover

**Terminal Type:**
Screw / Pressure Plate

**Terminal Screw Size:**
M3.5

**Recommended Torque:**
0.8Nm

**Max. PCB's:**
(2) Vertical

**Mounting:**
35mm DIN Rail

### ORDERING INFORMATION

| Part Number | Type | Description | PCB Connection |
|---|---|---|---|
| 90.230 | KO4762 | Solid Cover | Wire Jumper/ Fast On |

### ACCESSORIES

| Accessories | Part Number | Type |
|---|---|---|
| 1 Meter DIN Rail | 2511120/1M | TS35x7.5/1M |

### ENCLOSURE DRAWING (To convert to inches divide by 25.4.)

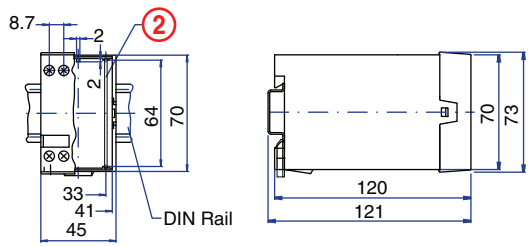


### PCB DRAWING (To convert to inches divide by 25.4.)

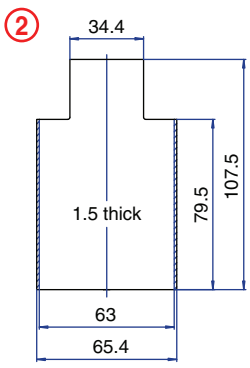


unused space

## 16 Terminal
### Solder Connection

### TECHNICAL INFORMATION

**Electrical:**
16A, 300V, 22-12 AWG
**Housing Material:**
Glass-filled Polycarbonate
**Cover Material:**
Glass-filled Polycarbonate
**Temperature Range:**
Up to 125°C (257°F)
**Flammability Rating:**
UL94 V-O (V-2 clear panel)
**Color:**
Black Housing with Tan Cover

**Terminal Type:**
Box Clamp
**Terminal Screw Size:**
M3.5
**Recommended Torque:**
0.8Nm
**Max. PCB's:**
(2) Vertical
(1) Horizontal
**Mounting:**
35mm DIN Rail

### ORDERING INFORMATION

| Part Number | Type | Description | PCB Connection |
|---|---|---|---|
| 90.290 | KO4763A | Solid Cover | Machine Solderable Pins |
| 90.291 | KO4763A | Removable Cover Panel, Tan | Machine Solderable Pins |
| 90.292 | KO4763A | Removable Cover Panel, Clear | Machine Solderable Pins |

### ACCESSORIES

| Accessories | Part Number | Type |
|---|---|---|
| 1 Meter DIN Rail | 2511120/1M | TS35x7.5/1M |

### ENCLOSURE DRAWING (To convert to inches divide by 25.4.)

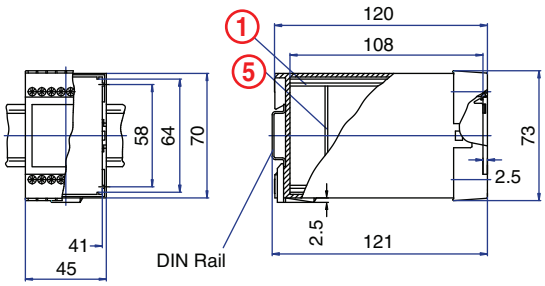


### PCB DRAWING (To convert to inches divide by 25.4.)

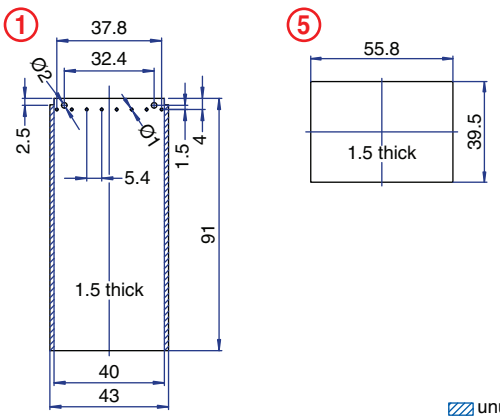


unused space

## 16 Terminal
### Solder/Tab Connection

### TECHNICAL INFORMATION

**Electrical:**
16A, 300V, 22-12 AWG
**Housing Material:**
Glass-filled Polycarbonate
**Cover Material:**
Glass-filled Polycarbonate
**Temperature Range:**
Up to 125°C (257°F)
**Flammability Rating:**
UL94 V-O (V-2 clear panel)
**Color:**
Black Housing with Tan Cover

**Terminal Type:**
Box Clamp
**Terminal Screw Size:**
M3.5
**Recommended Torque:**
0.8Nm
**Max. PCB's:**
(2) Vertical
**Mounting:**
35mm DIN Rail

### ORDERING INFORMATION

| Part Number | Type | Description | PCB Connection |
|---|---|---|---|
| 90.300 | KO4763B | Solid Cover | Wire Jumper |
| 90.301 | KO4763B | Removable Cover Panel, Tan | Wire Jumper |
| 90.302 | KO4763B | Removable Cover Panel, Clear | Wire Jumper |

### ACCESSORIES

| Accessories | Part Number | Type |
|---|---|---|
| 1 Meter DIN Rail | 2511120/1M | TS35x7.5/1M |

### ENCLOSURE DRAWING (To convert to inches divide by 25.4.)

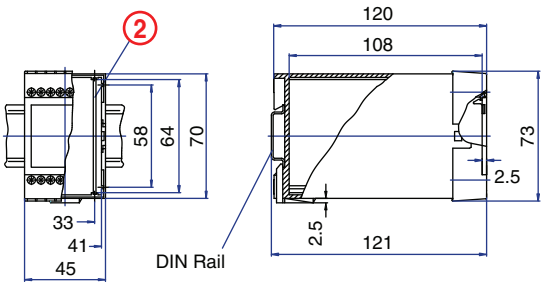


### PCB DRAWING (To convert to inches divide by 25.4.)

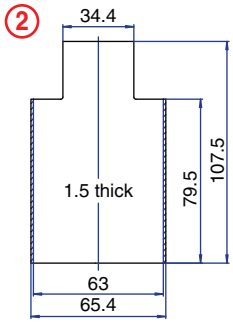


unused space

## 16 Terminal

**Pluggable Connection**

### TECHNICAL INFORMATION

**Electrical:**
10A, 300V, 22-12 AWG

**Housing Material:**
Glass-filled Polycarbonate

**Cover Material:**
Glass-filled Polycarbonate

**Temperature Range:**
Up to 125°C (257°F)

**Flammability Rating:**
UL94 V-O (V-2 clear panel)

**Color:**
Black Housing with Tan Cover

**Terminal Type:**
Box Clamp

**Terminal Screw Size:**
M3.5

**Recommended Torque:**
0.8Nm

**Max. PCB's:**
(2) Vertical
(1) Horizontal

**Mounting:**
35mm DIN Rail

### ORDERING INFORMATION

| Part Number | Type | Description | PCB Connection |
|---|---|---|---|
| 90.320 | KO4763P | Solid Cover | Card Edge |
| 90.321 | KO4763P | Removable Cover Panel, Tan | Card Edge |
| 90.322 | KO4763P | Removable Cover Panel, Clear | Card Edge |

### ACCESSORIES

| Accessories | Part Number | Type |
|---|---|---|
| 1 Meter DIN Rail | 2511120/1M | TS35x7.5/1M |

### ENCLOSURE DRAWING (To convert to inches divide by 25.4.)

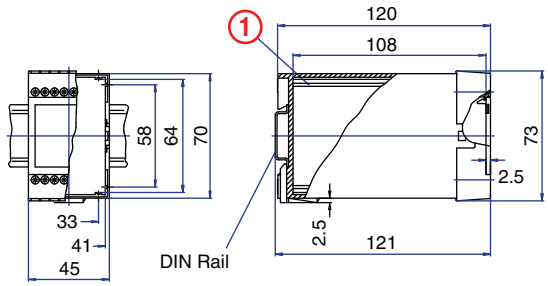


### PCB DRAWING (To convert to inches divide by 25.4.)

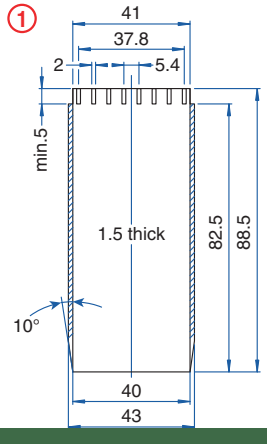


unused space

## 20 Terminal

**Pluggable Connection**

### TECHNICAL INFORMATION

**Electrical:**
10A, 300V, 22-14 AWG

**Housing Material:**
Glass-filled Polycarbonate

**Cover Material:**
Glass-filled Polycarbonate

**Temperature Range:**
Up to 125°C (257°F)

**Flammability Rating:**
UL94 V-O (V-2 clear panel)

**Color:**
Black Housing with Tan Cover

**Terminal Type:**
Screw / Pressure Plate

**Terminal Screw Size:**
M3.5

**Recommended Torque:**
0.8Nm

**Max. PCB's:**
(5) Vertical
(1) Horizontal behind cover

**Mounting:**
35mm DIN Rail or optional panel mounting*

### ORDERING INFORMATION

| Part Number | Type | Description | PCB Connection |
|---|---|---|---|
| 90.350 | KO4718P | Solid Cover | Card Edge/ Wire Jumper |
| 90.351 | KO4718P | Removable Cover Panel, Tan | Card Edge/ Wire Jumper |
| 90.352 | KO4718P | Removable Cover Panel, Clear | Card Edge/ Wire Jumper |

### ACCESSORIES

| Accessories | Part Number | Type |
|---|---|---|
| 1 Meter DIN Rail | 2511120/1M | TS35x7.5/1M |
| *Panel Mount Tab (need 2) | 93.001.2 | PMA |

### ENCLOSURE DRAWING (To convert to inches divide by 25.4.)

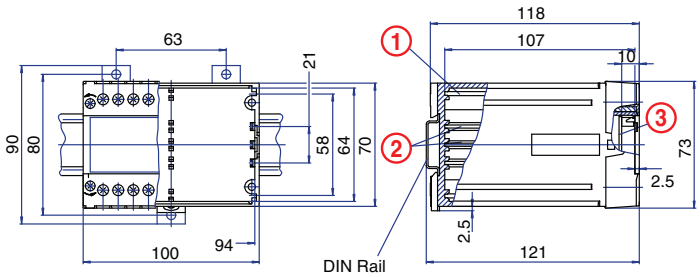


### PCB DRAWING (To convert to inches divide by 25.4.)

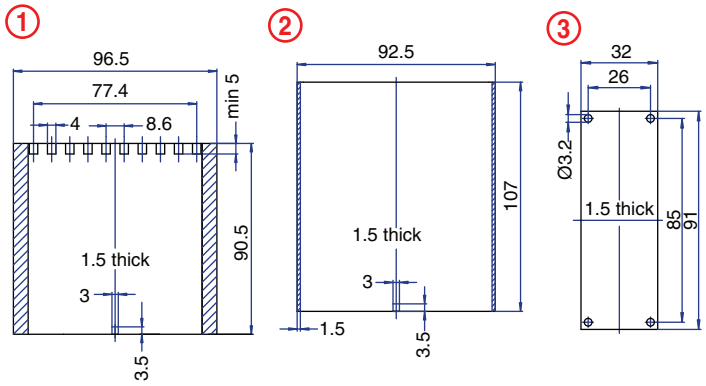


unused space

## 22 Terminal

**Solder Connection**

## TECHNICAL INFORMATION

**Electrical:**
16A, 300V, 22-12 AWG

**Housing Material:**
Glass-filled Polycarbonate

**Cover Material:**
Glass-filled Polycarbonate

**Temperature Range:**
Up to 125°C (257°F)

**Flammability Rating:**
UL94 V-O (V-2 Clear Panel)

**Color:**
Black Housing with Tan Cover

**Terminal Type:**
Box Clamp

**Terminal Screw Size:**
M3.5

**Recommended Torque:**
0.8Nm

**Max. PCB's:**
(5) Vertical
(1) Behind cover

**Mounting:**
35mm DIN Rail or optional panel mounting*

## ORDERING INFORMATION

| Part Number | Type | Description | PCB Connection |
|---|---|---|---|
| 90.380 | KO4713A | Solid Cover | Machine Solderable Pins |
| 90.381 | KO4713A | Removable Cover Panel, Tan | Machine Solderable Pins |
| 90.382 | KO4713A | Removable Cover Panel, Clear | Machine Solderable Pins |

## ACCESSORIES

| Accessories | Part Number | Type |
|---|---|---|
| 1 Meter DIN Rail | 2511120/1M | TS35x7.5/1M |
| *Panel Mount Tab (need 2) | 93.001.2 | PMA |

## ENCLOSURE DRAWING (To convert to inches divide by 25.4.)

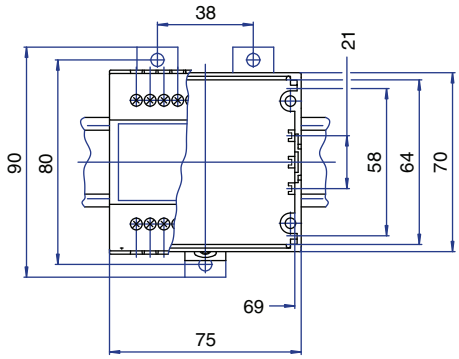


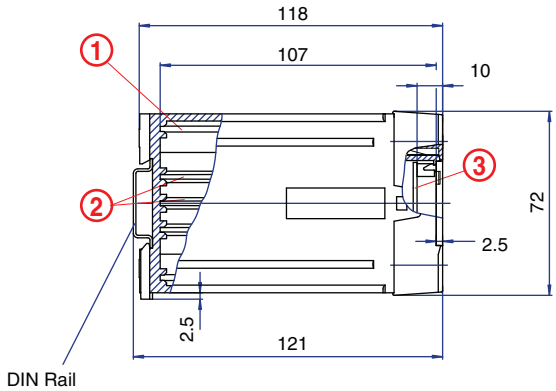


## PCB DRAWING (To convert to inches divide by 25.4.)

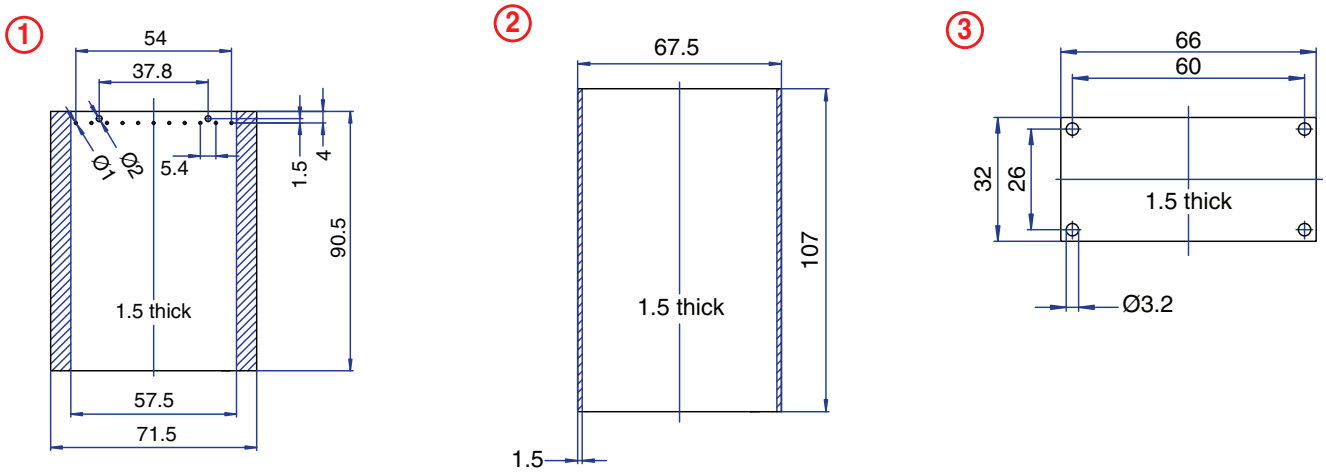


unused space

## 22 Terminal
**Pluggable Connection**

## TECHNICAL INFORMATION

**Electrical:**
10A, 300V, 22-12 AWG

**Housing Material:**
Glass-filled Polycarbonate

**Cover Material:**
Glass-filled Polycarbonate

**Temperature Range:**
Up to 125°C (257°F)

**Flammability Rating:**
UL94 V-O (V-2 clear panel)

**Color:**
Black Housing with Tan Cover

**Terminal Type:**
Box Clamp

**Terminal Screw Size:**
M3.5

**Recommended Torque:**
0.8Nm

**Max. PCB's:**
(5) Vertical
(1) Behind cover

**Mounting:**
35mm DIN Rail or optional panel mounting*

## ORDERING INFORMATION

| Part Number | Type | Description | PCB Connection |
|---|---|---|---|
| 90.410 | KO4713P | Solid Cover | Card Edge |
| 90.411 | KO4713P | Removable Cover Panel, Tan | Card Edge |
| 90.412 | KO4713P | Removable Cover Panel, Clear | Card Edge |

## ACCESSORIES

| Accessories | Part Number | Type |
|---|---|---|
| 1 Meter DIN Rail | 2511120/1M | TS35x7.5/1M |
| *Panel Mount Tab (need 2) | 93.001.2 | PMA |

## ENCLOSURE DRAWING (To convert to inches divide by 25.4.)

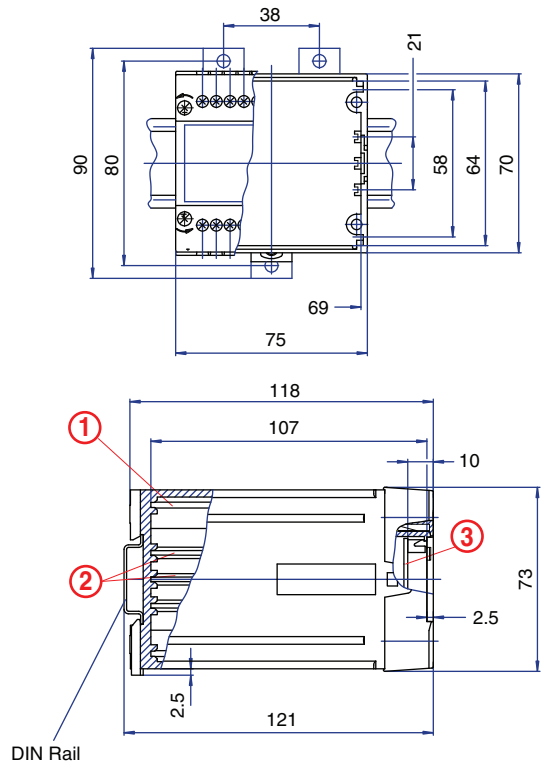


## PCB DRAWING (To convert to inches divide by 25.4.)

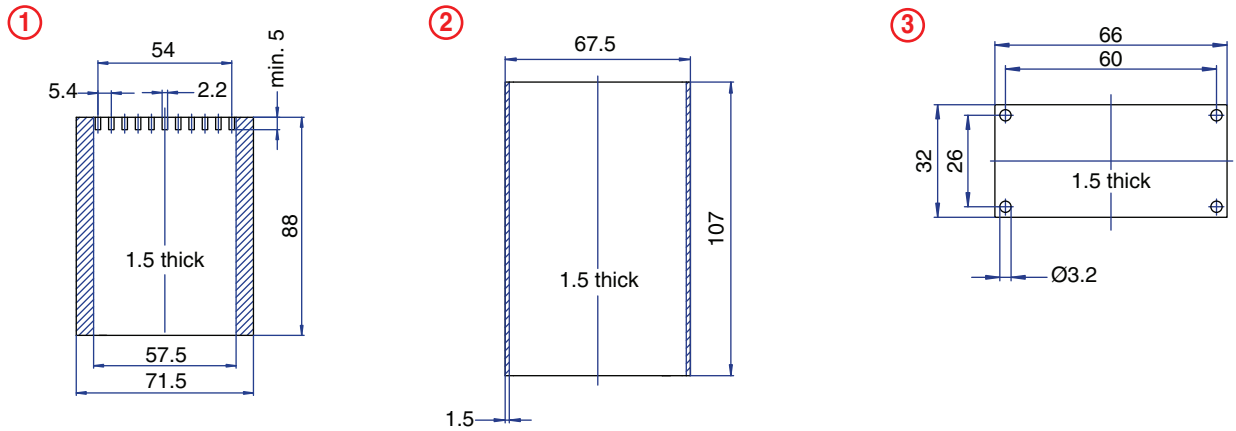


unused space

## 30 Terminal
**Solder Connection**

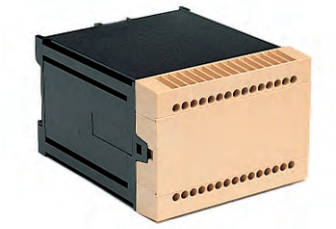

## TECHNICAL INFORMATION

**Electrical:**
16A, 300V, 22-12 AWG

**Housing Material:**
Glass-filled Polycarbonate

**Cover Material:**
Glass-filled Polycarbonate

**Temperature Range:**
Up to 125°C (257°F)

**Flammability Rating:**
UL94 V-O (V-2 clear panel)

**Color:**
Black Housing with Tan Cover

**Terminal Type:**
Box Clamp

**Terminal Screw Size:**
M3.5

**Recommended Torque:**
0.8Nm

**Max. PCB's:**
(5) Vertical
(1) Behind Cover

**Mounting:**
35mm DIN Rail or optional panel mounting*

## ORDERING INFORMATION

| Part Number | Type | Description | PCB Connection |
|---|---|---|---|
| 90.440 | KO4717A | Solid Cover | Machine Solderable Pins |
| 90.441 | KO4717A | Removable Cover Panel, Tan | Machine Solderable Pins |
| 90.442 | KO4717A | Removable Cover Panel, Clear | Machine Solderable Pins |

## ACCESSORIES

| Accessories | Part Number | Type |
|---|---|---|
| 1 Meter DIN Rail | 2511120/1M | TS35x7.5/1M |
| *Panel Mount Tab (need 2) | 93.001.2 | PMA |

## ENCLOSURE DRAWING (To convert to inches divide by 25.4.)

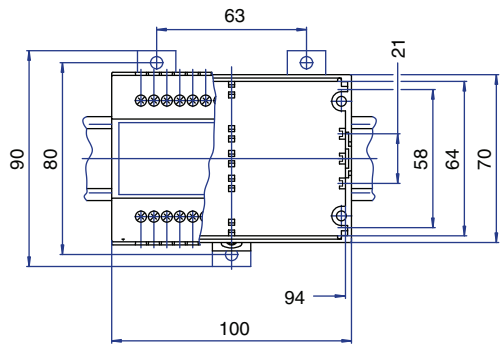


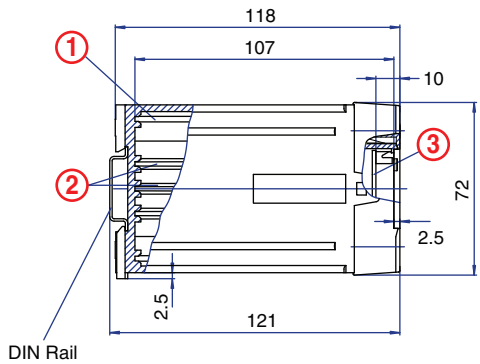


## PCB DRAWING (To convert to inches divide by 25.4.)

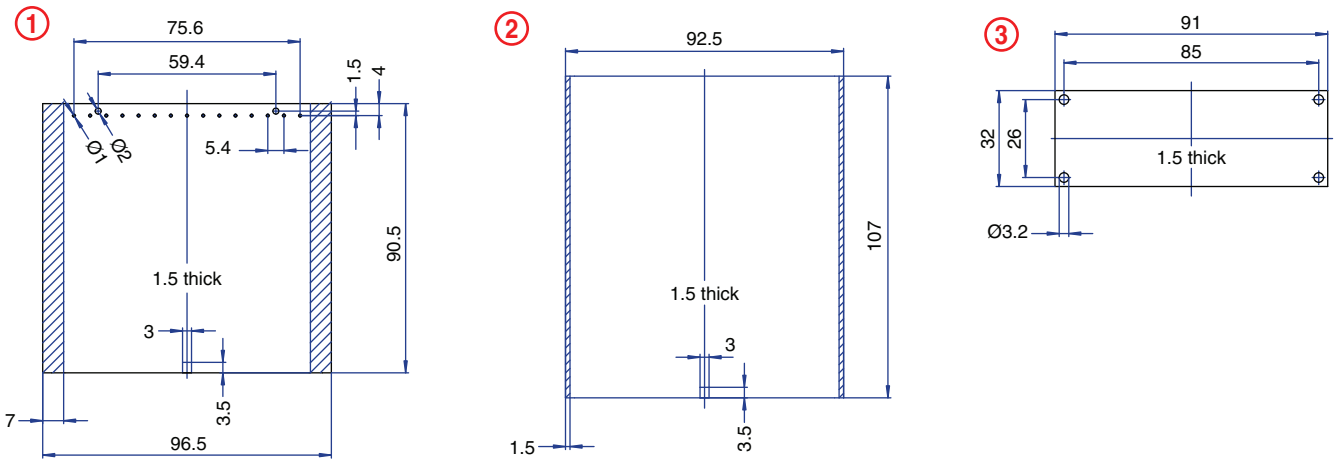


unused space

## 30 Terminal

**Pluggable Connection**

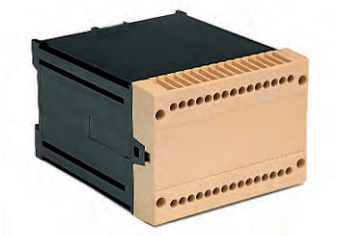

## TECHNICAL INFORMATION

**Electrical:**
10A, 300V, 22-12 AWG

**Housing Material:**
Glass-filled Polycarbonate

**Cover Material:**
Glass-filled Polycarbonate

**Temperature Range:**
Up to 125°C (257°F)

**Flammability Rating:**
UL94 V-O (V-2 clear panel)

**Color:**
Black Housing with Tan Cover

**Terminal Type:**
Box Clamp

**Terminal Screw Size:**
M3.5

**Recommended Torque:**
0.8Nm

**Max. PCB's:**
(5) Vertical
(1) Behind Cover

**Mounting:**
35mm DIN Rail or optional panel mounting*

## ORDERING INFORMATION

| Part Number | Type | Description | PCB Connection |
|---|---|---|---|
| 90.470 | KO4717P | Solid Cover | Card Edge |
| 90.471 | KO4717P | Removable Cover Panel, Tan | Card Edge |
| 90.472 | KO4717P | Removable Cover Panel, Clear | Card Edge |

## ACCESSORIES

| Accessories | Part Number | Type |
|---|---|---|
| 1 Meter DIN Rail | 2511120/1M | TS35x7.5/1M |
| *Panel Mount Tab (need 2) | 93.001.2 | PMA |

## ENCLOSURE DRAWING (To convert to inches divide by 25.4.)

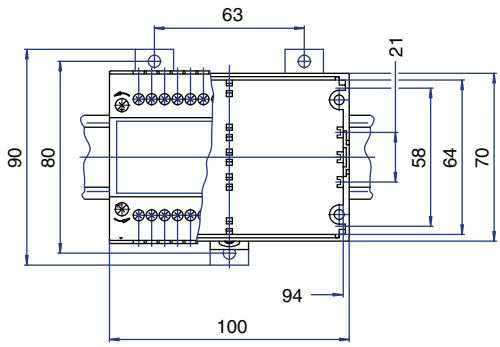


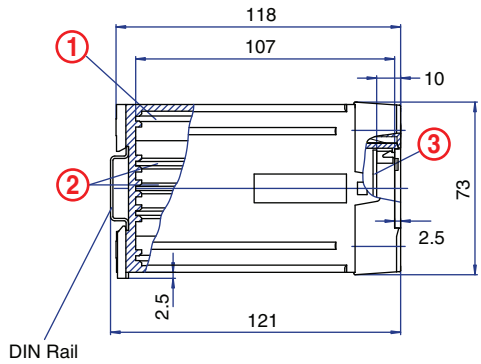


## PCB DRAWING (To convert to inches divide by 25.4.)

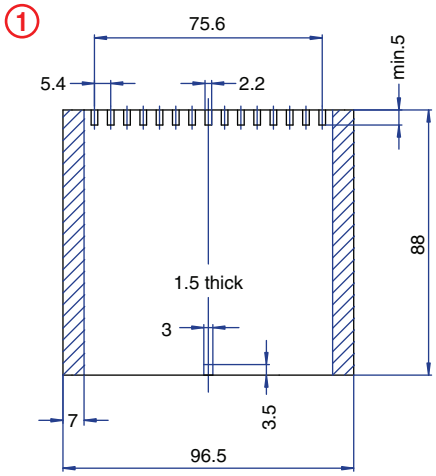


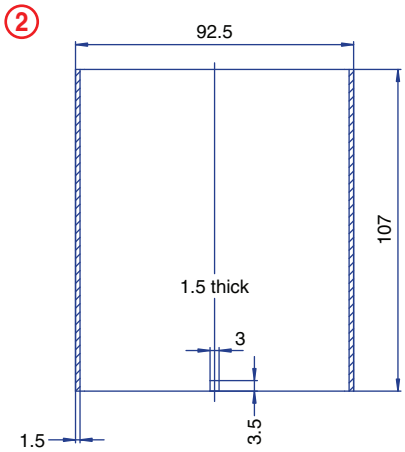


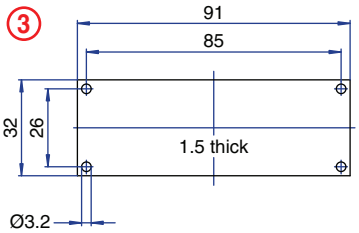


unused space

## 32 Terminal

**Pluggable and Solder Connection**

## TECHNICAL INFORMATION

**Electrical:**
10A, 300V, 22-14 AWG

**Housing Material:**
Glass-filled Polycarbonate

**Cover Material:**
Glass-filled Polycarbonate

**Temperature Range:**
Up to 125°C (257°F)

**Flammability Rating:**
UL94 V-O (V-2 clear panel)

**Color:**
Black Housing with Tan Cover

**Terminal Type:**
Screw/ Pressure Plate

**Terminal Screw Size:**
M3.5

**Recommended Torque:**
0.8Nm

**Max. PCB's:**
(5) Vertical
(1) Behind cover
(1) Base Mount

**Mounting:**
35mm DIN Rail or optional panel mounting*

## ORDERING INFORMATION

| Part Number | Type | Description | PCB Connection |
|---|---|---|---|
| 90.500 | KO4719P | Solid Cover | Card Edge/ Wire Jumper |
| 90.501 | KO4719P | Removable Cover Panel, Tan | Card Edge/ Wire Jumper |
| 90.502 | KO4719P | Removable Cover Panel, Clear | Card Edge/ Wire Jumper |

## ACCESSORIES

| Accessories | Part Number | Type |
|---|---|---|
| 1 Meter DIN Rail | 2511120/1M | TS35x7.5/1M |
| *Panel Mount Tab (need 3) | 93.001.2 | PMA |

## ENCLOSURE DRAWING (To convert to inches divide by 25.4.)

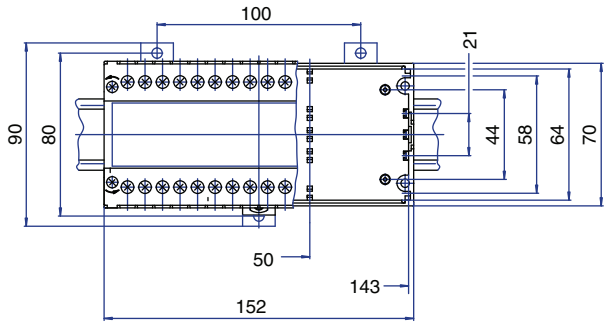


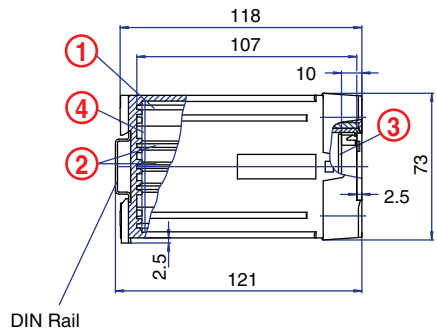


## PCB DRAWING (To convert to inches divide by 25.4.)

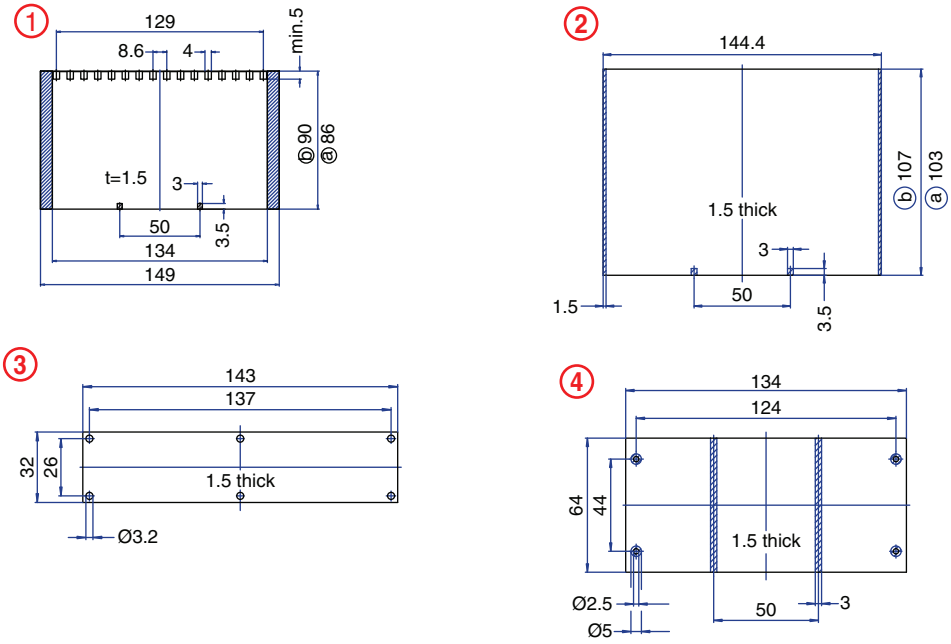


unused space
ⓐ with base mount PCB
ⓑ without base mount PCB

## 42 Terminal

**Pluggable and Solder Connection**

## TECHNICAL INFORMATION

**Electrical:**
10A, 300V, 22-14 AWG

**Housing Material:**
Glass-filled Polycarbonate

**Cover Material:**
Glass-filled Polycarbonate

**Temperature Range:**
Up to 125°C (257°F)

**Flammability Rating:**
UL94 V-O (V-2 clear panel)

**Color:**
Black Housing with Tan Cover

**Terminal Type:**
Screw/ Pressure Plate

**Terminal Screw Size:**
M3.5

**Recommended Torque:**
0.8Nm

**Max. PCB's:**
(5) Vertical
(1) Behind cover

**Mounting:**
35mm DIN Rail or optional panel mounting*

## ORDERING INFORMATION

| Part Number | Type | Description | PCB Connection |
|---|---|---|---|
| 90.530 | KO4720P | Solid Cover | Card Edge/ Wire Jumper |
| 90.531 | KO4720P | Removable Cover Panel, Tan | Card Edge/ Wire Jumper |
| 90.532 | KO4720P | Removable Cover Panel, Clear | Card Edge/ Wire Jumper |

## ACCESSORIES

| Accessories | Part Number | Type |
|---|---|---|
| 1 Meter DIN Rail | 2511120/1M | TS35x7.5/1M |
| *Panel Mount Tab (need 3) | 93.001.2 | PMA |

## ENCLOSURE DRAWING (To convert to inches divide by 25.4.)

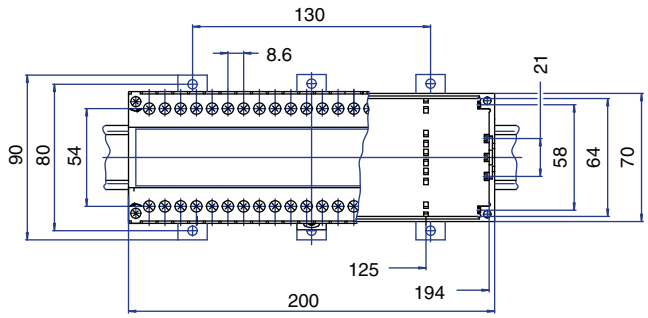


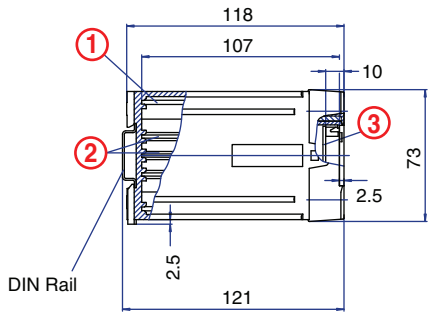


## PCB DRAWING (To convert to inches divide by 25.4.)

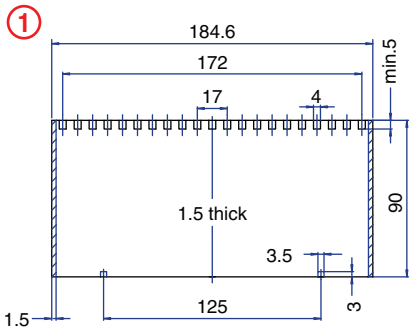


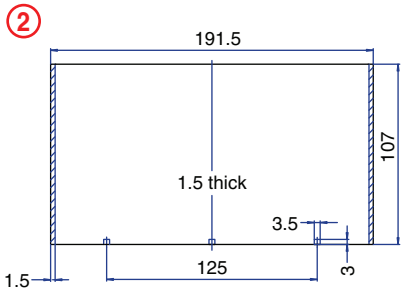


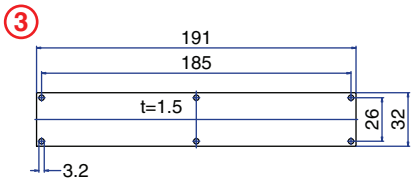


unused space

## 42 Terminal

**Pluggable and Solder Connection**

## TECHNICAL INFORMATION

**Electrical:**
10A, 300V, 22-14 AWG

**Housing Material:**
Glass-filled Polycarbonate

**Cover Material:**
Glass-filled Polycarbonate

**Temperature Range:**
Up to 125°C (257°F)

**Flammability Rating:**
UL94 V-O

**Color:**
Black Housing with Tan Cover

**Terminal Type:**
Screw/ Pressure Plate

**Terminal Screw Size:**
M3.5

**Recommended Torque:**
0.8Nm

**Max. PCB's:**
(11) Vertical
(1) Base Mount

**Mounting:**
35mm DIN Rail or optional panel mounting*

## ORDERING INFORMATION

| Part Number | Type | Description | PCB Connection |
|---|---|---|---|
| 90.560 | KO4722SP | Solid Cover | Card Edge/ Wire Jumper |

## ACCESSORIES

| Accessories | Part Number | Type |
|---|---|---|
| 1 Meter DIN Rail | CA701/15-S | TS35x15/1M |
| *Panel Mount Tab (need 3) | 93.001.2 | PMA |

## ENCLOSURE DRAWING (To convert to inches divide by 25.4.)

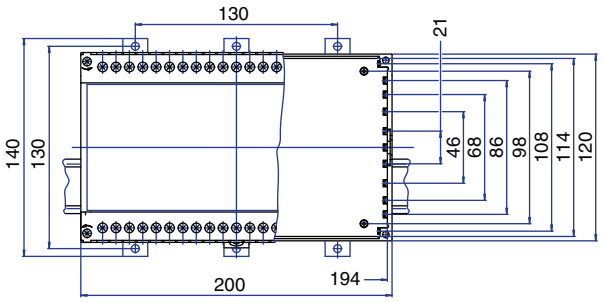


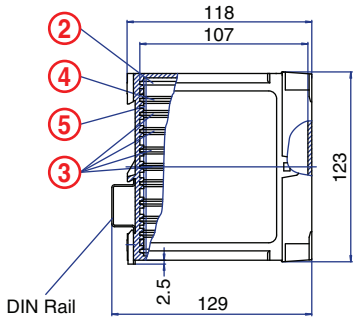


## PCB DRAWING (To convert to inches divide by 25.4.)

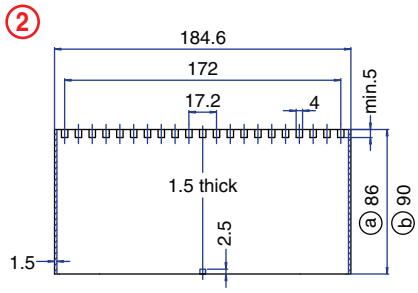


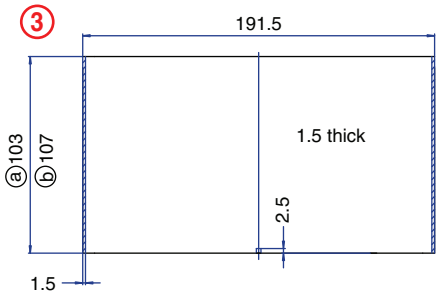


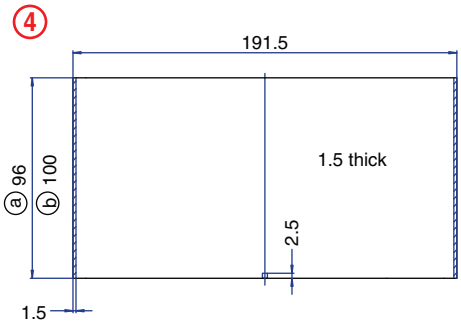


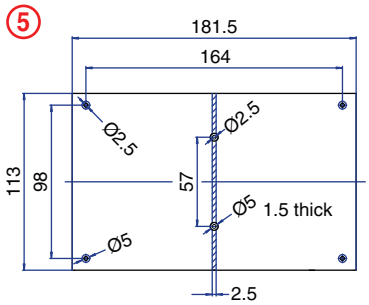


unused space
ⓐ with base mount PCB
ⓑ without base mount PCB

## 50 Terminal

**Solder Connection**

## TECHNICAL INFORMATION

**Electrical:**
16A, 300V, 22-12 AWG

**Housing Material:**
Glass-filled Polycarbonate

**Cover Material:**
Glass-filled Polycarbonate

**Temperature Range:**
Up to 125°C (257°F)

**Flammability Rating:**
UL94 V-O (V-2 Clear Panel)

**Color:**
Black Housing with Tan Cover

**Terminal Type:**
Box Clamp

**Terminal Screw Size:**
M3.5

**Recommended Torque:**
0.8Nm

**Max. PCB's:**
(5) Vertical
(1) Behind Cover
(1) Base Mount

**Mounting:**
35mm DIN Rail or optional panel mounting*

## ENCLOSURE DRAWING (To convert to inches divide by 25.4.)

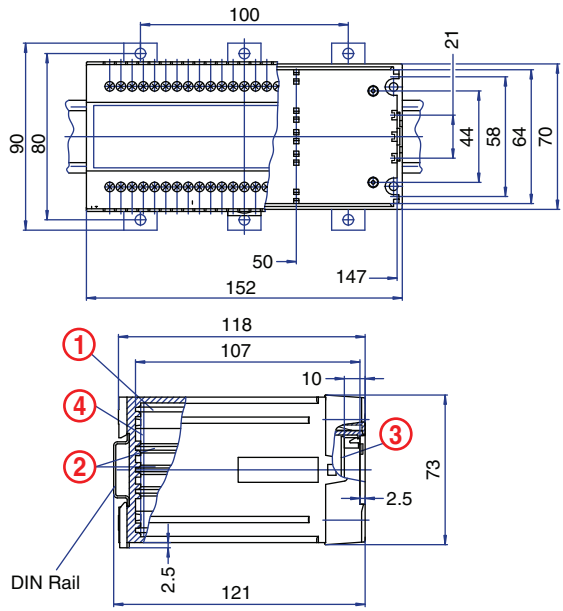


## ORDERING INFORMATION

| Part Number | Type | Description | PCB Connection |
|---|---|---|---|
| 90.590 | KO4716A | Solid Cover | Machine Solderable Pins |
| 90.591 | KO4716A | Removable Cover Panel, Tan | Machine Solderable Pins |
| 90.592 | KO4716A | Removable Cover Panel, Clear | Machine Solderable Pins |

## ACCESSORIES

| Accessories | Part Number | Type |
|---|---|---|
| 1 Meter DIN Rail | 2511120/1M | TS35x7.5/1M |
| *Panel Mount Tab (need 3) | 93.001.2 | PMA |

## PCB DRAWING (To convert to inches divide by 25.4.)

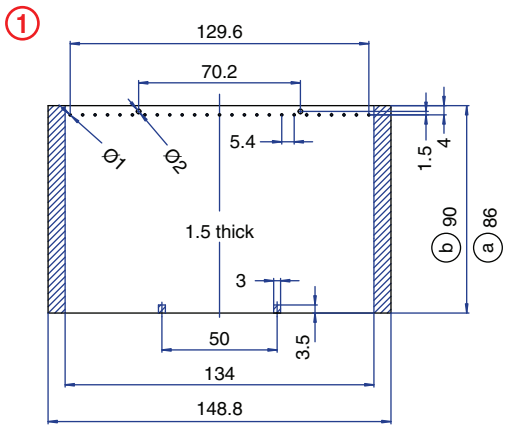


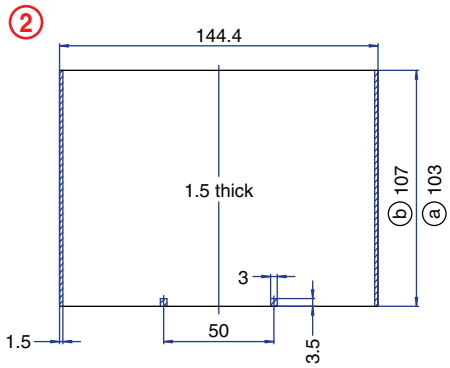


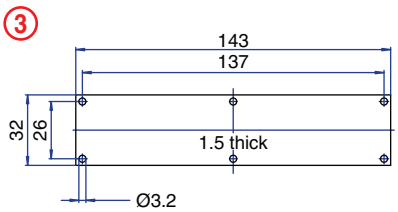


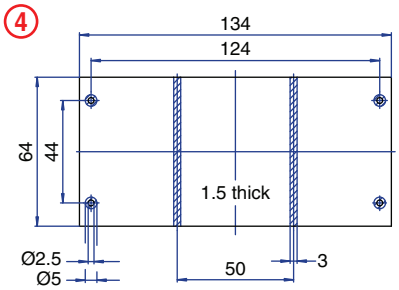


unused space
ⓐ with base mount PCB
ⓑ without base mount PCB

## 50 Terminal

**Pluggable Connection**

## TECHNICAL INFORMATION

**Electrical:**
10A, 300V, 22-12 AWG

**Housing Material:**
Glass-filled Polycarbonate

**Cover Material:**
Glass-filled Polycarbonate

**Temperature Range:**
Up to 125°C (257°F)

**Flammability Rating:**
UL94 V-O (V-2 Clear Panel)

**Color:**
Black Housing with Tan Cover

**Terminal Type:**
Box Clamp

**Terminal Screw Size:**
M3.5

**Recommended Torque:**
0.8Nm

**Max. PCB's:**
(5) Vertical
(1) Behind cover
(1) Base Mount

**Mounting:**
35mm DIN Rail or optional panel mounting*

## ENCLOSURE DRAWING (To convert to inches divide by 25.4.)

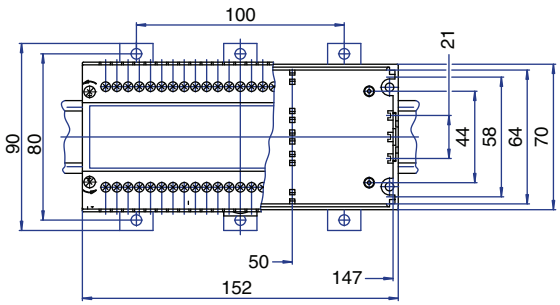


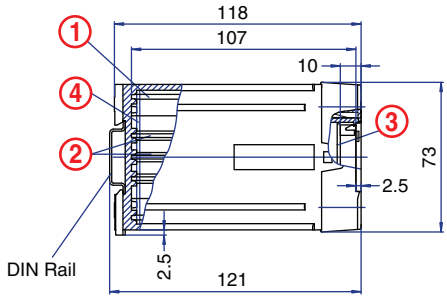


## ORDERING INFORMATION

| Part Number | Type | Description | PCB Connection |
|---|---|---|---|
| 90.620 | KO4716P | Solid Cover | Card Edge |
| 90.621 | KO4716P | Removable Cover Panel, Tan | Card Edge |
| 90.622 | KO4716P | Removable Cover Panel, Clear | Card Edge |

## ACCESSORIES

| Accessories | Part Number | Type |
|---|---|---|
| 1 Meter DIN Rail | 2511120/1M | TS35x7.5/1M |
| *Panel Mount Tab (need 3) | 93.001.2 | PMA |

## PCB DRAWING (To convert to inches divide by 25.4.)

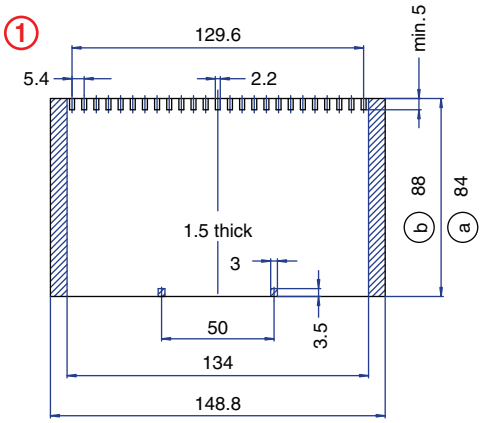


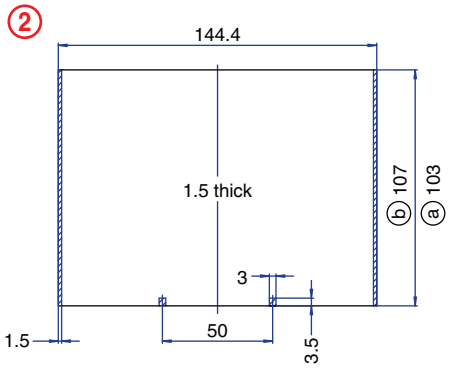


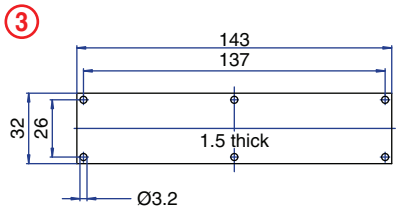


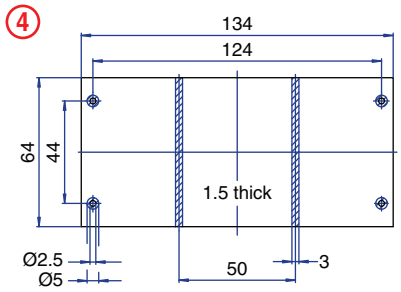


unused space
ⓐ with base mount PCB
ⓑ without base mount PCB

## 66 Terminal

**Pluggable Connection**

## TECHNICAL INFORMATION

**Electrical:**
10A, 300V, 22-12 AWG

**Housing Material:**
Glass-filled Polycarbonate

**Cover Material:**
Glass-filled Polycarbonate

**Temperature Range:**
Up to 125°C (257°F)

**Flammability Rating:**
UL94 V-O (V-2 Clear Panel)

**Color:**
Black Housing with Tan Cover

**Terminal Type:**
Box Clamp

**Terminal Screw Size:**
M3.5

**Recommended Torque:**
0.8Nm

**Max. PCB's:**
(5) Vertical
(1) Behind cover

**Mounting:**
35mm DIN Rail or optional panel mounting*

## ORDERING INFORMATION

| Part Number | Type | Description | PCB Connection |
|---|---|---|---|
| 90.680 | KO4721P | Solid Cover | Card Edge |
| 90.681 | KO4721P | Removable Cover Panel, Tan | Card Edge |
| 90.682 | KO4721P | Removable Cover Panel, Clear | Card Edge |

## ACCESSORIES

| Accessories | Part Number | Type |
|---|---|---|
| 1 Meter DIN Rail | 2511120/1M | TS35x7.5/1M |
| *Panel Mount Tab (need 3) | 93.001.2 | PMA |

## ENCLOSURE DRAWING (To convert to inches divide by 25.4.)

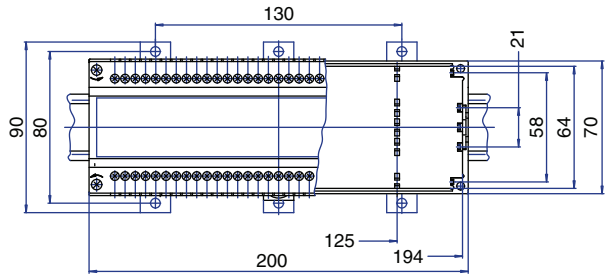


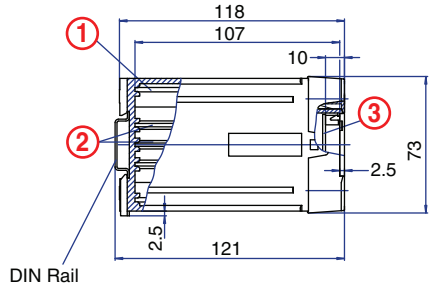


## PCB DRAWING (To convert to inches divide by 25.4.)

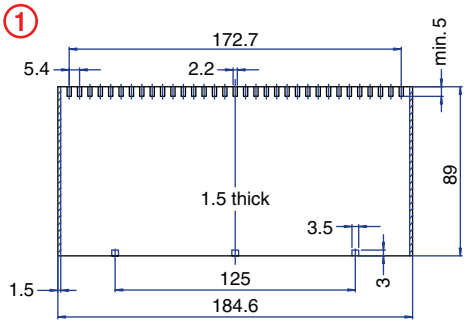


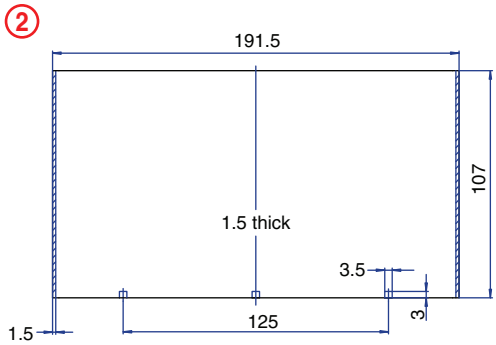


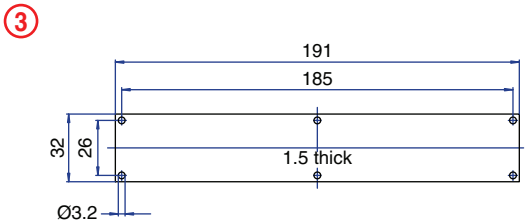


unused space

## 66 Terminal

**Pluggable Connection**

## TECHNICAL INFORMATION

**Electrical:**
10A, 300V, 22-12 AWG

**Housing Material:**
Glass-filled Polycarbonate

**Cover Material:**
Glass-filled Polycarbonate

**Temperature Range:**
Up to 125°C (257°F)

**Flammability Rating:**
UL94 V-O

**Color:**
Black Housing with Tan Cover

**Terminal Type:**
Box Clamp

**Terminal Screw Size:**
M3.5

**Recommended Torque:**
0.8Nm

**Max. PCB's:**
(11) Vertical
(1) Base Mount

**Mounting:**
35mm DIN Rail or optional panel mounting*

## ORDERING INFORMATION

| Part Number | Type | Description | PCB Connection |
|---|---|---|---|
| 90.710 | KO4723SP | Solid Cover | Card Edge |

## ACCESSORIES

| Accessories | Part Number | Type |
|---|---|---|
| 1 Meter DIN Rail | 2511120/1M | TS35x7.5/1M |
| *Panel Mount Tab (need 3) | 93.001.2 | PMA |

## ENCLOSURE DRAWING (To convert to inches divide by 25.4.)

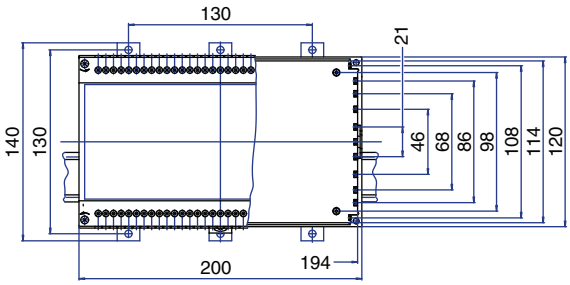


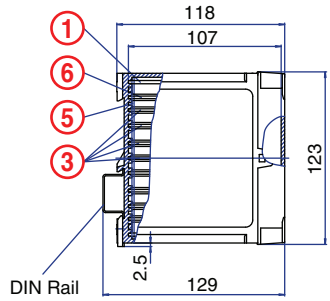


## PCB DRAWING (To convert to inches divide by 25.4.)

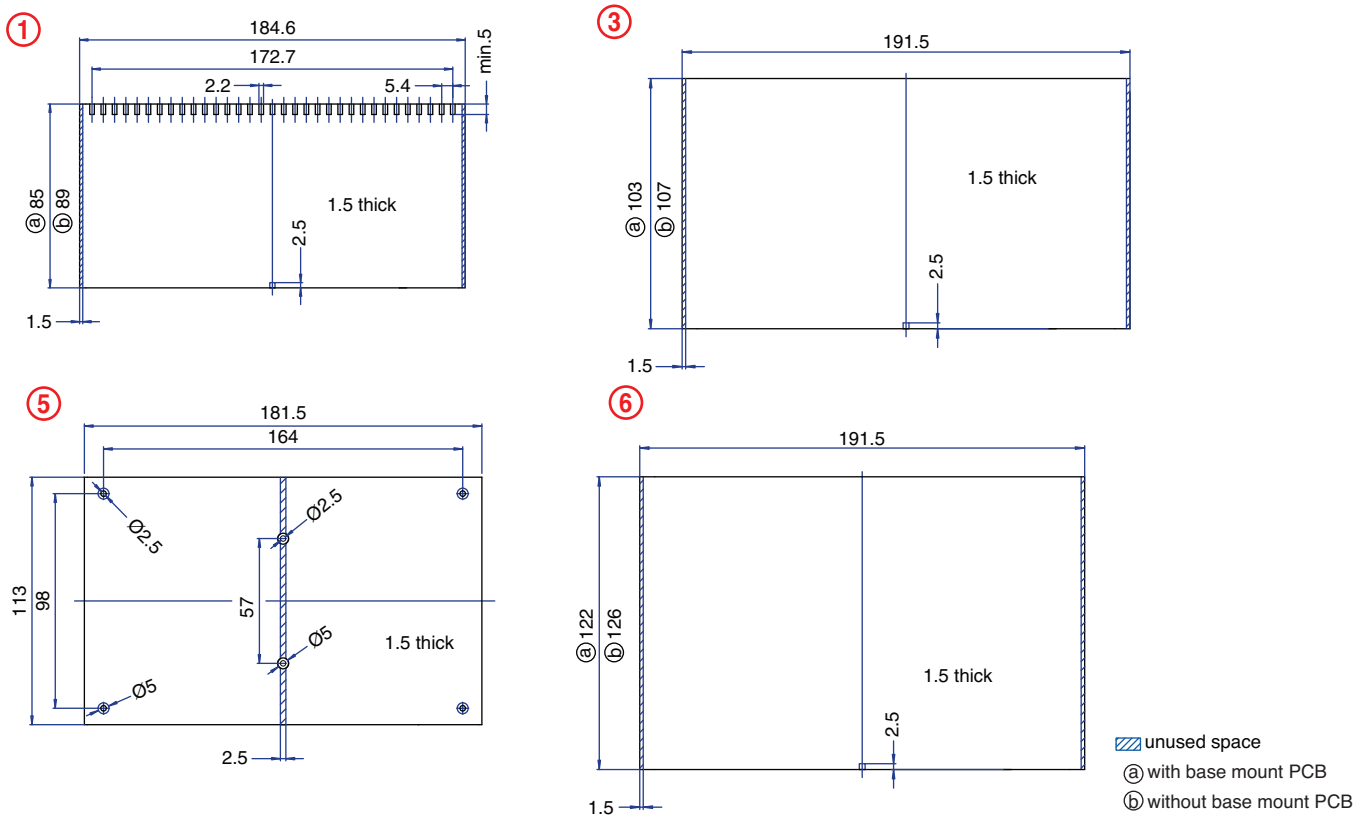

## 84 Terminal

**Pluggable and Solder Connection**

### TECHNICAL INFORMATION

**Electrical:**
10A, 300V, 22-14 AWG

**Housing Material:**
Glass-filled Polycarbonate

**Cover Material:**
Glass-filled Polycarbonate

**Temperature Range:**
Up to 125°C (257°F)

**Flammability Rating:**
UL94 V-O

**Color:**
Black Housing with Tan Cover

**Terminal Type:**
Screw / Pressure Plate

**Terminal Screw Size:**
M3.5

**Recommended Torque:**
0.8Nm

**Max. PCB's:**
(11) Vertical
(1) Base Mount

**Mounting:**
35mm DIN Rail or optional panel mounting*

### ORDERING INFORMATION

| Part Number | Type | Description | PCB Connection |
|---|---|---|---|
| 90.740 | KO4722DP | Solid Cover | Card Edge/ Wire Jumper |

### ACCESSORIES

| Accessories | Part Number | Type |
|---|---|---|
| 1 Meter DIN Rail | CA701/15-S | TS35x15/1M |
| *Panel Mount Tab (need 3) | 93.001.2 | PMA |

### ENCLOSURE DRAWING (To convert to inches divide by 25.4.)

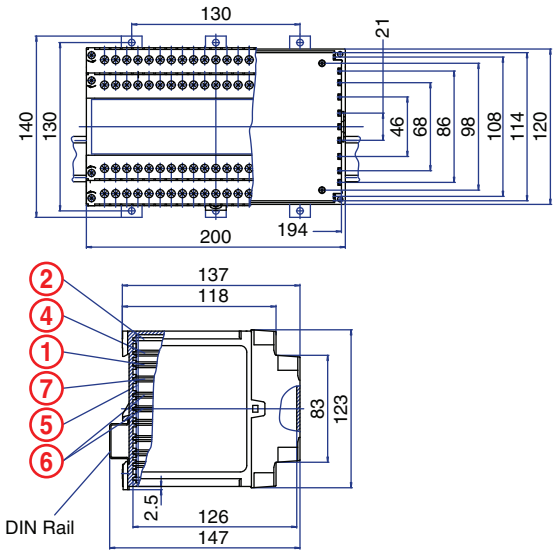


### PCB DRAWING (To convert to inches divide by 25.4.)

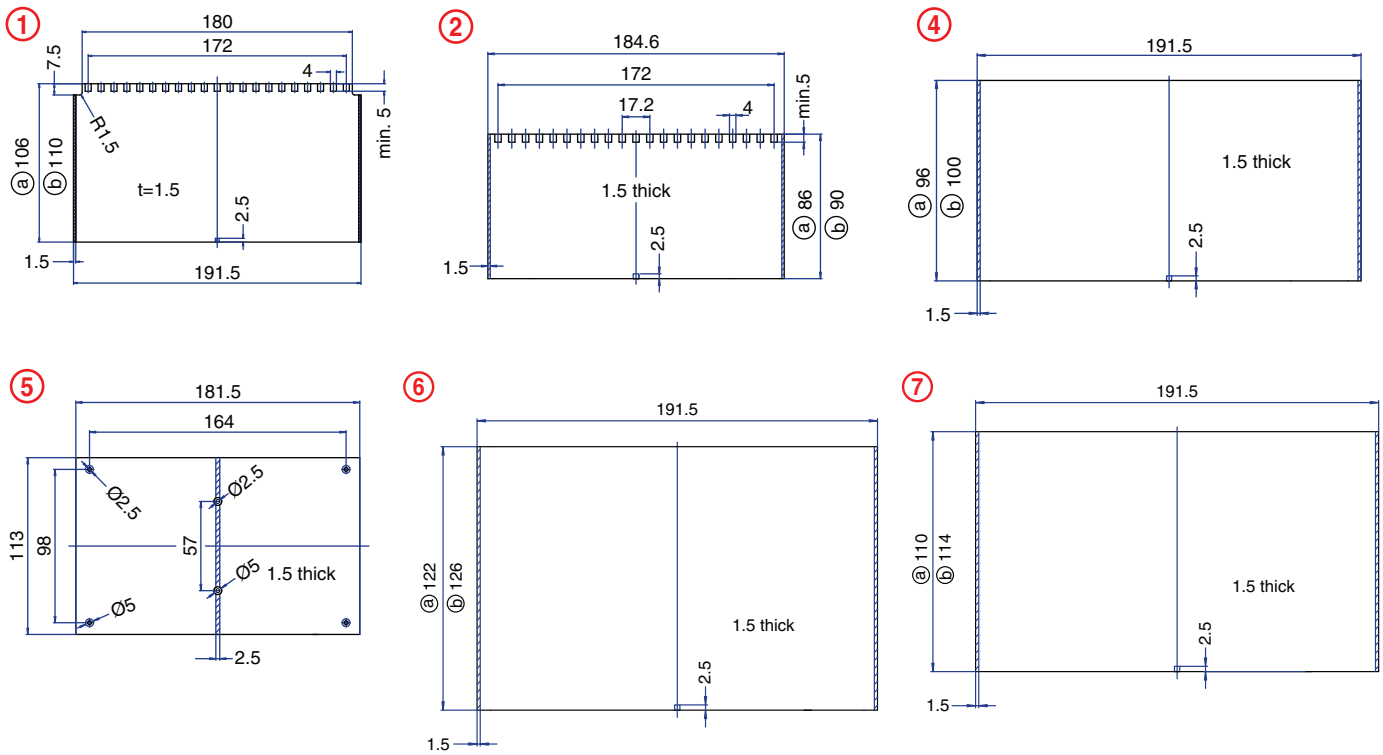


unused space
ⓐ with base mount PCB
ⓑ without base mount PCB

## 132 Terminal

**Pluggable Connection**

### TECHNICAL INFORMATION

**Electrical:**
10A, 300V, 22-12 AWG

**Housing Material:**
Glass-filled Polycarbonate

**Cover Material:**
Glass-filled Polycarbonate

**Temperature Range:**
Up to 125°C (257°F)

**Flammability Rating:**
UL94 V-O

**Color:**
Black Housing with Tan Cover

**Terminal Type:**
Box Clamp

**Terminal Screw Size:**
M3.5

**Recommended Torque:**
0.8Nm

**Max. PCB's:**
(11) Vertical
(1) Base Mount

**Mounting:**
35mm DIN Rail or optional panel mounting*

### ORDERING INFORMATION

| Part Number | Type | Description | PCB Connection |
|---|---|---|---|
| 90.770 | KO4723DP | Solid Cover | Card Edge |

### ACCESSORIES

| Accessories | Part Number | Type |
|---|---|---|
| 1 Meter DIN Rail | CA701/15-S | TS35x15/1M |
| *Panel Mount Tab (need 3) | 93.001.2 | PMA |

### ENCLOSURE DRAWING (To convert to inches divide by 25.4.)

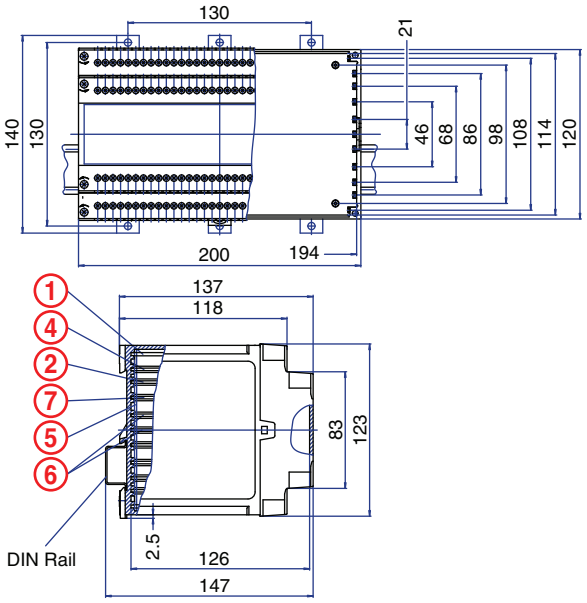


### PCB DRAWING (To convert to inches divide by 25.4.)

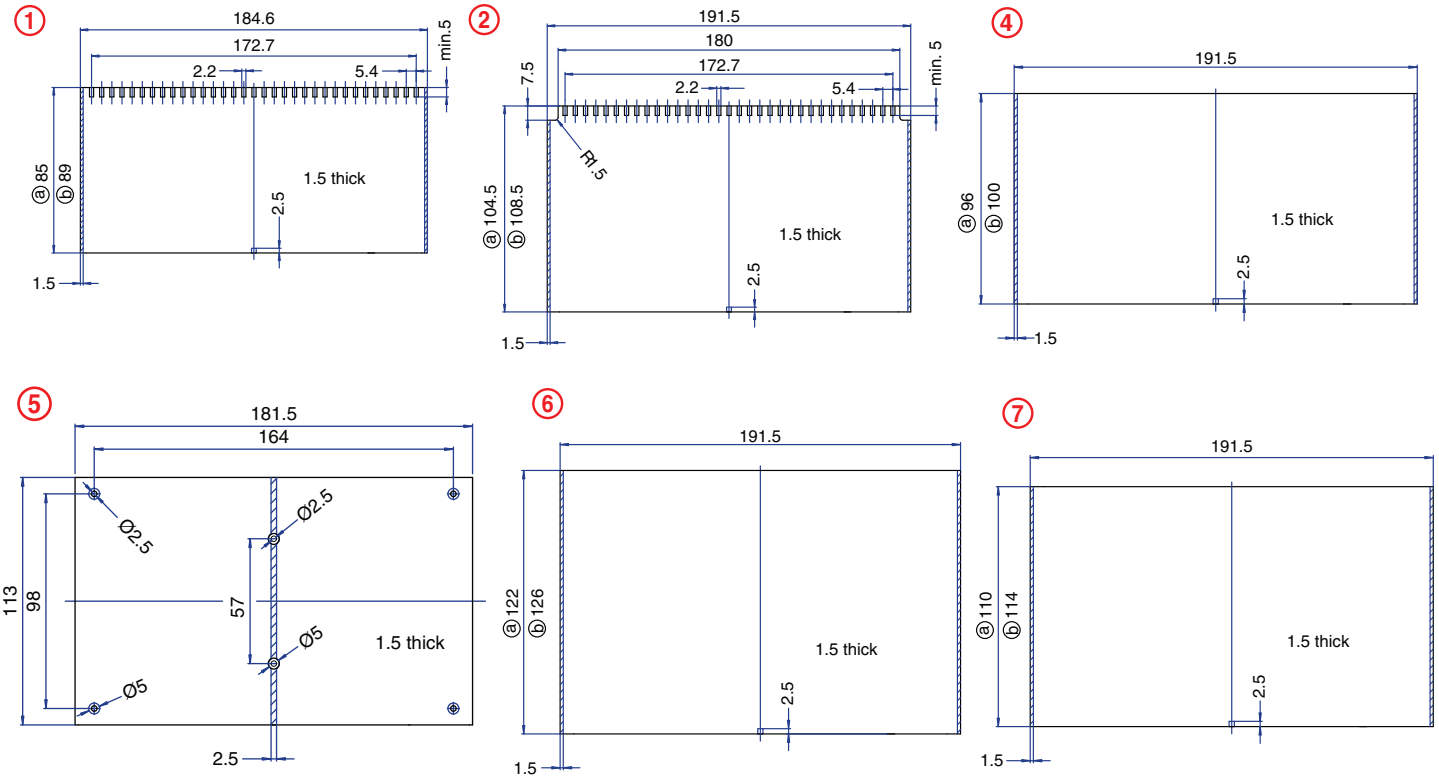


unused space
ⓐ with base mount PCB
ⓑ without base mount PCB

## 6 Terminal

**with 6 High Current Terminals**

**Solder Connection**

## TECHNICAL INFORMATION

**Electrical:**
40A, 300V, 18-8 AWG

**Housing Material:**
Glass-filled Polycarbonate

**Cover Material:**
Glass-filled Polycarbonate

**Temperature Range:**
Up to 125°C (257°F)

**Flammability Rating:**
UL94 V-O

**Color:**
Black Housing with Tan Cover

**Terminal Type:**
Box Clamp

**Terminal Screw Size:**
M3.5

**Recommended Torque:**
0.8Nm

**Max. PCB's:**
(2) Vertical
(2) Horizontal

**Mounting:**
35mm DIN Rail or optional panel mounting*

## ORDERING INFORMATION

| Part Number | Type | Description |
|---|---|---|
| 90.815 | KO4734 | Removable High Current Wire Jumper Terminals |

## ACCESSORIES

| Accessories | Part Number | Type |
|---|---|---|
| 1 Meter DIN Rail | 2511120/1M | TS35x7.5/1M |
| *Panel Mount Tab | 93.001.2 | PMA |

## ENCLOSURE DRAWING (To convert to inches divide by 25.4.)

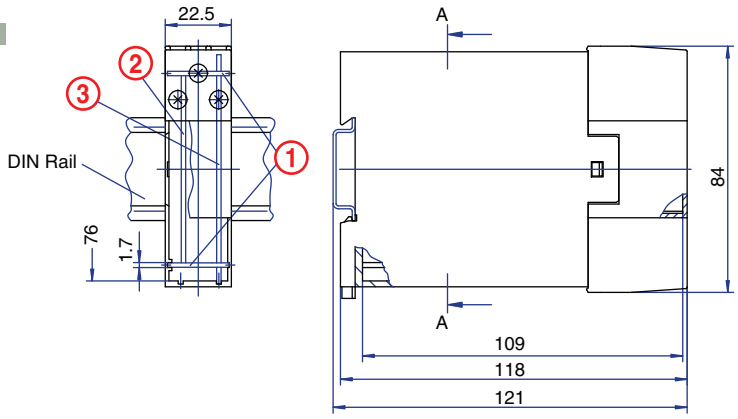


## PCB DRAWING (To convert to inches divide by 25.4.)

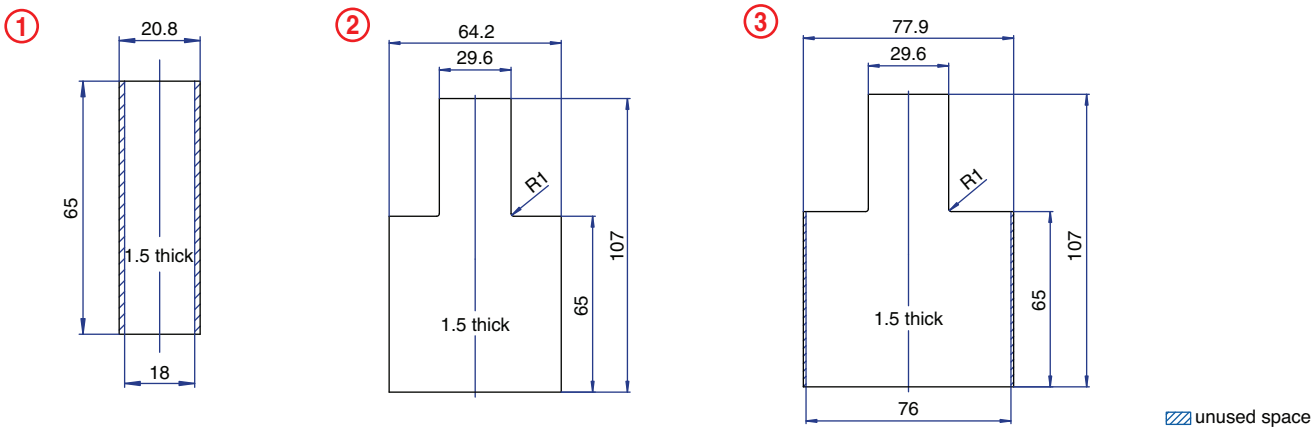

## 14 Terminal Maximum

**Pluggable Card Edge Connection**

## TECHNICAL INFORMATION

**Electrical:**
see chart for Amperages, 300V, 22-12 AWG

**Housing Material:**
Glass-filled Polycarbonate

**Cover Material:**
Glass-filled Polycarbonate

**Temperature Range:**
Up to 125°C (257°F)

**Flammability Rating:**
UL94 V-O (V-2 Clear Panel)

**Color:**
Black Housing with Tan Cover

**Terminal Type:**
Box clamp

**Terminal Screw Size:**
M3.5

**Recommended Torque:**
0.8Nm

**Max. PCB's:**
(2) Vertical
(2) Horizontal

**Mounting:**
35mm DIN Rail or optional panel mounting*

## COMPLETE ENCLOSURE CONSISTS OF

(1) Base Housing
(1) Cover Frame
(1) Cover Panel
(2) Terminal or blanking blocks

## ORDERING INFORMATION

| Part Number | Type | Description |
|---|---|---|
| 90.810 | KO4730H | Base Housing |
| 90.810.1 | KO4730F | Cover Frame |
| 90.810.2 | KO4730P | Cover Panel, Tan |
| 90.810.3 | KO4730P-C | Cover Panel, Clear |
| 90.810.4 | KO4730P/S | Cover Panel with terminal release slots, Tan |
| 90.810.5 | KO4730P-C/S | Cover Panel with terminal release slots, Clear |
| 90.803 | KO473xT/3 | Terminal Block, 3 terminals |
| 90.804 | KO473xT/4 | Terminal Block, 4 terminals |
| 90.807 | KO473xT/7 | Terminal Block, 7 terminals |
| 90.800 | KO473xT/B | Blanking Block, 0 terminals |

## ACCESSORIES

| Accessories | Part Number | Type |
|---|---|---|
| 1 Meter DIN Rail | 2511120/1M | TS35x7.5/1M |
| *Panel Mount Tab | 93.001.2 | PMA |

## AMPERAGE CHART

**Max. Current Carrying Capacity of Terminal Blocks**

| | 3 pole ○○○ | 4 pole ○○○○ | 7 pole ○○○ ○○○○ |
|---|---|---|---|
| Max Amperage of Terminal Blocks | 15A | 28A | 15A top row<br>28A bottom row |
| Max Amperage Per Terminal Point | 5A | 8A | 5A top row<br>8A bottom row |

## ENCLOSURE DRAWING (To convert to inches divide by 25.4.)

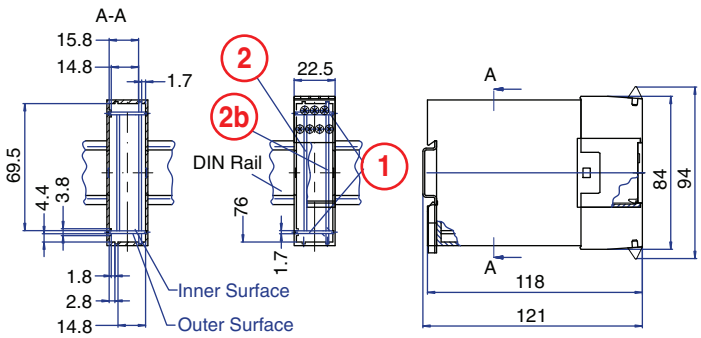


## PCB DRAWING (To convert to inches divide by 25.4.)

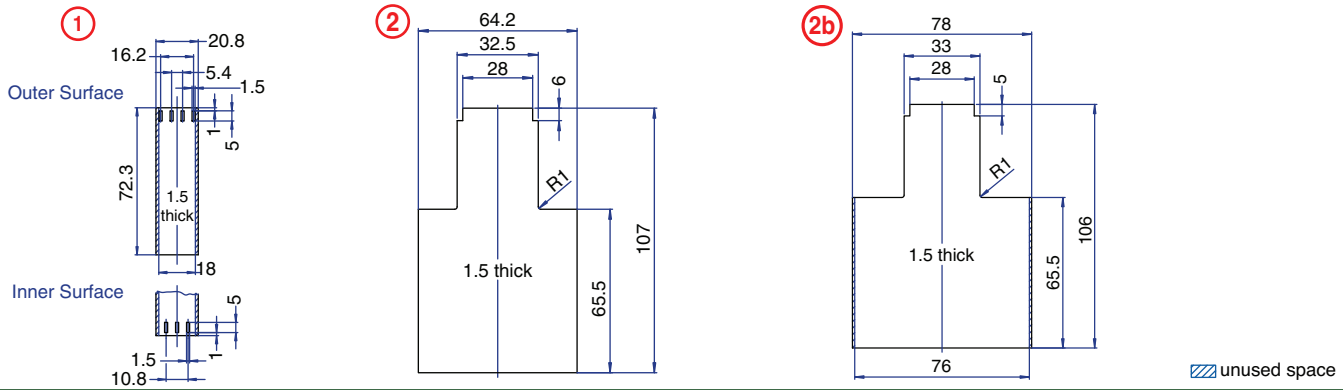

## 20 Terminal Maximum

**with 6 High Current Terminals**

**Pluggable Card Edge Connection/ Solder Connection**

## TECHNICAL INFORMATION

**Electrical:**
see chart for Amperages, 300V, 22-12 AWG standard 18-8 AWG high current

**Housing Material:**
Glass-filled Polycarbonate

**Cover Material:**
Glass-filled Polycarbonate

**Temperature Range:**
Up to 125°C (257°F)

**Flammability Rating:**
UL94 V-O (V-2 Clear Panel)

**Color:**
Black Housing with Tan Cover

**Terminal Type:**
Box clamp

**Terminal Screw Size:**
M3.5

**Recommended Torque:**
0.8Nm

**Max. PCB's:**
(2) Vertical
(2) Horizontal

**Mounting:**
35mm DIN Rail or optional panel mounting*

## COMPLETE ENCLOSURE CONSISTS OF

(1) Base Housing
(1) Cover Frame
(1) Cover Panel
(2) Terminal or blanking blocks
(2) High current terminal blocks

## ORDERING INFORMATION

| Part Number | Type | Description |
|---|---|---|
| 90.825 | KO4735H | Base Housing |
| 90.825.1 | KO4735F | Cover Frame |
| 90.820.2 | KO4731/5P | Cover Panel, Tan |
| 90.820.3 | KO4731/5P-C | Cover Panel, Clear |
| 90.820.4 | KO4731/5P/S | Cover Panel with terminal release slots, Tan |
| 90.820.5 | KO4731/5P-C/S | Cover Panel with terminal release slots, Clear |
| 90.803 | KO473xT/3 | Terminal Block, 3 terminals |
| 90.804 | KO473xT/4 | Terminal Block, 4 terminals |
| 90.807 | KO473xT/7 | Terminal Block, 7 terminals |
| 90.800 | KO473xT/B | Blanking Block, 0 terminals |
| 90.808 | KO473xHCT | High Current Block, 3 terminals |

## ENCLOSURE DRAWING (To convert to inches divide by 25.4.)

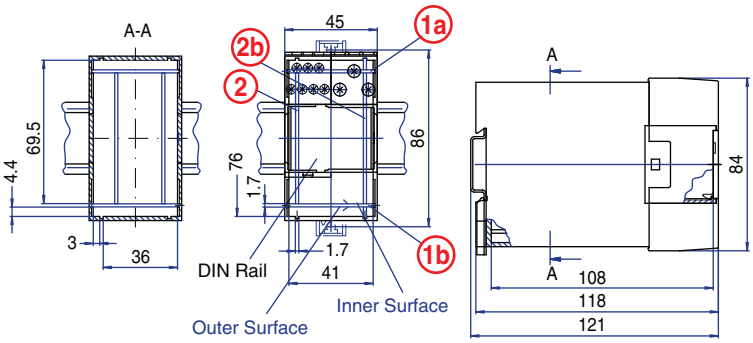


## ACCESSORIES

| Accessories | Part Number | Type |
|---|---|---|
| 1 Meter DIN Rail | 2511120/1M | TS35x7.5/1M |
| *Panel Mount Tab | 93.001.2 | PMA |

## AMPERAGE CHART

**Max. Current Carrying Capacity of Terminal Blocks**

| | 3 pole ○○○ | 4 pole ○○○○ | 7 pole ○○○ ○○○○ | High Current ○ ○○ |
|---|---|---|---|---|
| Max Amperage of Terminal Blocks | 15A | 28A | 15A top row<br>28A bottom row | 40A |
| Max Amperage Per Terminal Point | 8A | 8A | 5A top row<br>8A bottom row | 40A |

## PCB DRAWING (To convert to inches divide by 25.4.)

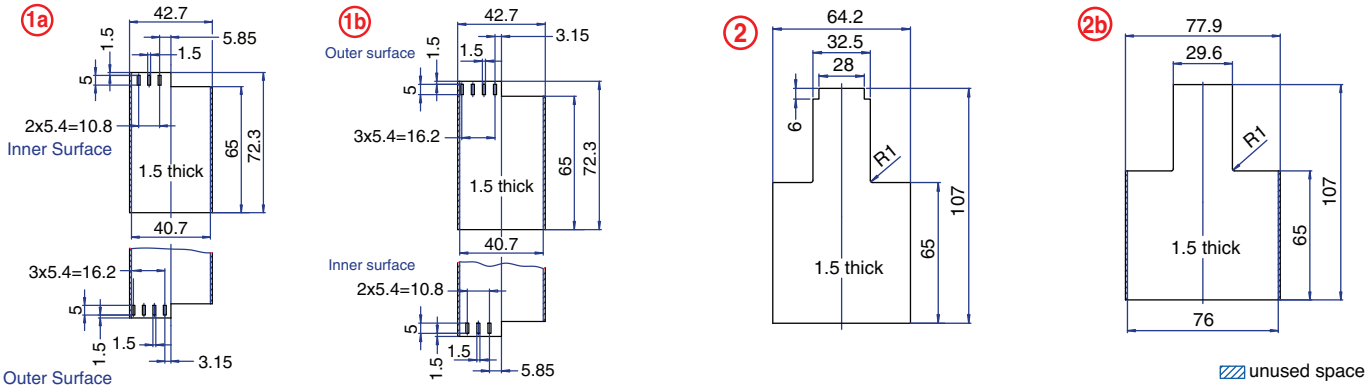

## 28 Terminal Maximum

**Pluggable Card Edge Connection**

## TECHNICAL INFORMATION

**Electrical:**
see chart for Amperages, 300V, 22-12 AWG

**Housing Material:**
Glass-filled Polycarbonate

**Cover Material:**
Glass-filled Polycarbonate

**Temperature Range:**
Up to 125°C (257°F)

**Flammability Rating:**
UL94 V-O (V-2 Clear Panel)

**Color:**
Black Housing with Tan Cover

**Terminal Type:**
Box clamp

**Terminal Screw Size:**
M3.5

**Recommended Torque:**
0.8Nm

**Max. PCB's:**
(2) Vertical
(2) Horizontal

**Mounting:**
35mm DIN Rail or optional panel mounting*

## COMPLETE ENCLOSURE CONSISTS OF

(1) Base Housing
(1) Cover Frame
(1) Cover Panel
(4) Terminal or blanking blocks

## ORDERING INFORMATION

| Part Number | Type | Description |
|---|---|---|
| 90.820 | KO4731H | Base Housing |
| 90.820.1 | KO4731F | Cover Frame |
| 90.820.2 | KO4731/5P | Cover Panel, Tan |
| 90.820.3 | KO4731/5P-C | Cover Panel, Clear |
| 90.820.4 | KO4731/5P/S | Cover Panel with terminal release slots, Tan |
| 90.820.5 | KO4731/5P-C/S | Cover Panel with terminal release slots, Clear |
| 90.803 | KO473xT/3 | Terminal Block, 3 terminals |
| 90.804 | KO473xT/4 | Terminal Block, 4 terminals |
| 90.807 | KO473xT/7 | Terminal Block, 7 terminals |
| 90.800 | KO473xT/B | Blanking Block, 0 terminals |

## ACCESSORIES

| Accessories | Part Number | Type |
|---|---|---|
| 1 Meter DIN Rail | 2511120/1M | TS35x7.5/1M |
| *Panel Mount Tab | 93.001.2 | PMA |

## AMPERAGE CHART

**Max. Current Carrying Capacity of Terminal Blocks**

| | 3 pole ○○○ | 4 pole ○○○○ | 7 pole ○○○ ○○○○ |
|---|---|---|---|
| Max Amperage of Terminal Blocks | 15A | 28A | 15A top row<br>28A bottom row |
| Max Amperage Per Terminal Point | 5A | 8A | 5A top row<br>8A bottom row |

## ENCLOSURE DRAWING (To convert to inches divide by 25.4.)

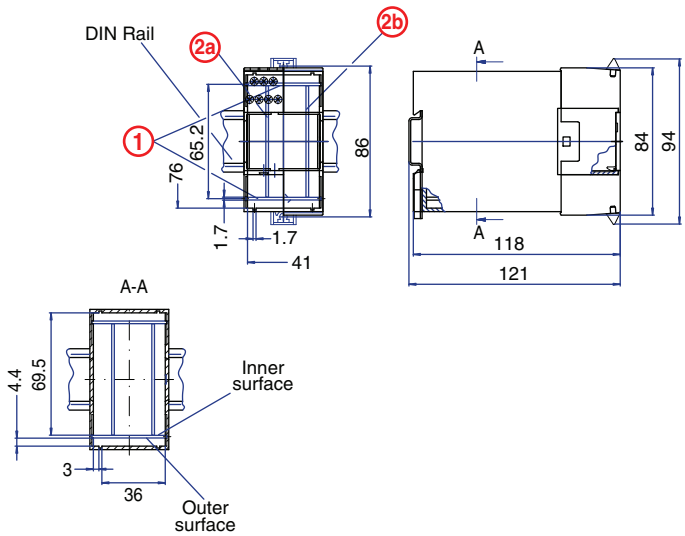


## PCB DRAWING (To convert to inches divide by 25.4.)

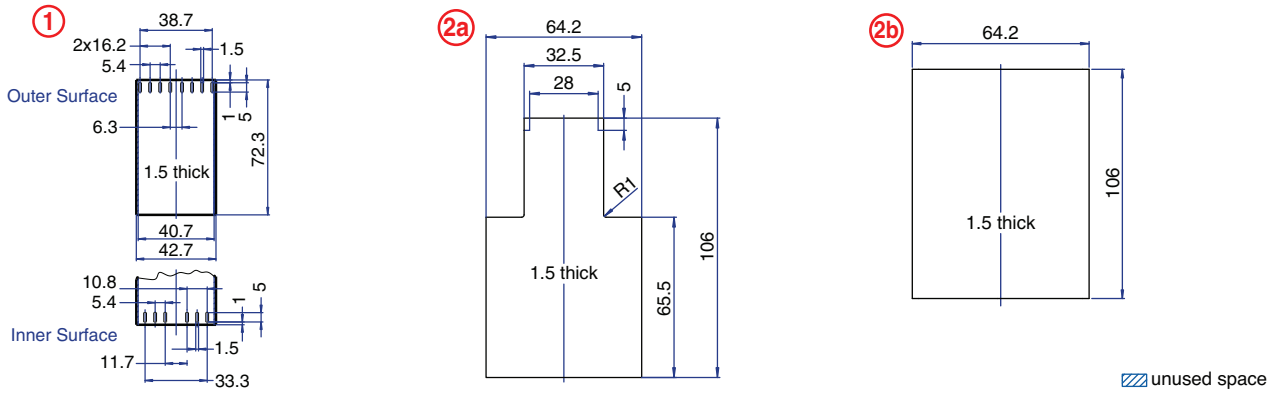

## 34 Terminal Maximum

**with 6 High Current Terminals**

**Pluggable Card Edge Connection/ Solder Connection**

## TECHNICAL INFORMATION

**Electrical:**
see chart for Amperages, 300V, 22-12 AWG standard 18-8 AWG high current

**Housing Material:**
Glass-filled Polycarbonate

**Cover Material:**
Glass-filled Polycarbonate

**Temperature Range:**
Up to 125°C (257°F)

**Flammability Rating:**
UL94 V-O (V-2 Clear Panel)

**Color:**
Black Housing with Tan Cover

**Terminal Type:**
Box clamp

**Terminal Screw Size:**
M3.5

**Recommended Torque:**
0.8Nm

**Max. PCB's:**
(3) Vertical
(2) Horizontal
(1) Parallel with cover

**Mounting:**
35mm DIN Rail or optional panel mounting*

## COMPLETE ENCLOSURE CONSISTS OF

(1) Base Housing
(1) Center Cover
(4) Terminal or blanking blocks
(2) High current terminal blocks

## ORDERING INFORMATION

| Part Number | Type | Description |
|---|---|---|
| 90.830 | KO4732/6H | Base Housing |
| 90.830.6 | KO4736F | Center Cover |
| 90.803 | KO473xT/3 | Terminal Block, 3 terminals |
| 90.804 | KO473xT/4 | Terminal Block, 4 terminals |
| 90.807 | KO473xT/7 | Terminal Block, 7 terminals |
| 90.800 | KO473xT/B | Blanking Block, 0 terminals |
| 90.808 | KO473xHCT | High Current Block, 3 terminals |

## ENCLOSURE DRAWING (To convert to inches divide by 25.4.)

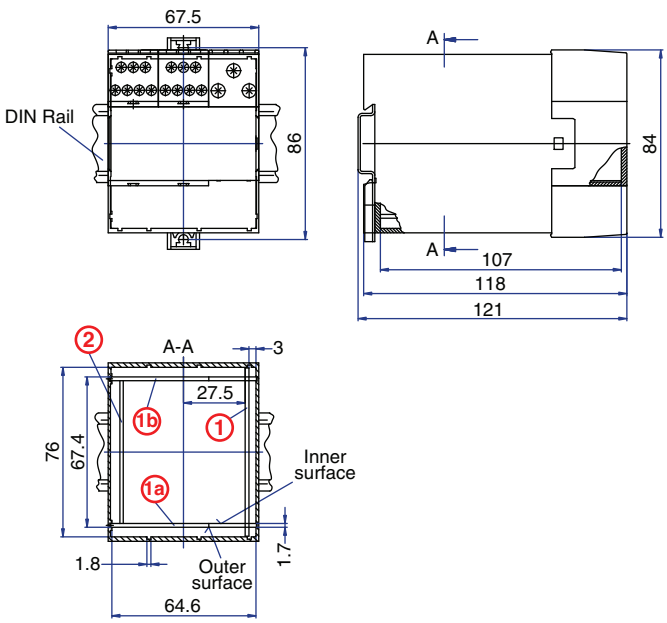


## ACCESSORIES

| Accessories | Part Number | Type |
|---|---|---|
| 1 Meter DIN Rail | 2511120/1M | TS35x7.5/1M |
| *Panel Mount Tab (need 2) | 93.001.2 | PMA |

## AMPERAGE CHART

**Max. Current Carrying Capacity of Terminal Blocks**

| | 3 pole | 4 pole | 7 pole | High Current |
|---|---|---|---|---|
| | ○○○ | ○○○○ | ○○○ ○○○○ | ○ ○○ |
| Max Amperage of Terminal Blocks | 15A | 28A | 15A top row 28A bottom row | 40A |
| Max Amperage Per Terminal Point | 8A | 8A | 5A top row 8A bottom row | 40A |

## PCB DRAWING (To convert to inches divide by 25.4.)

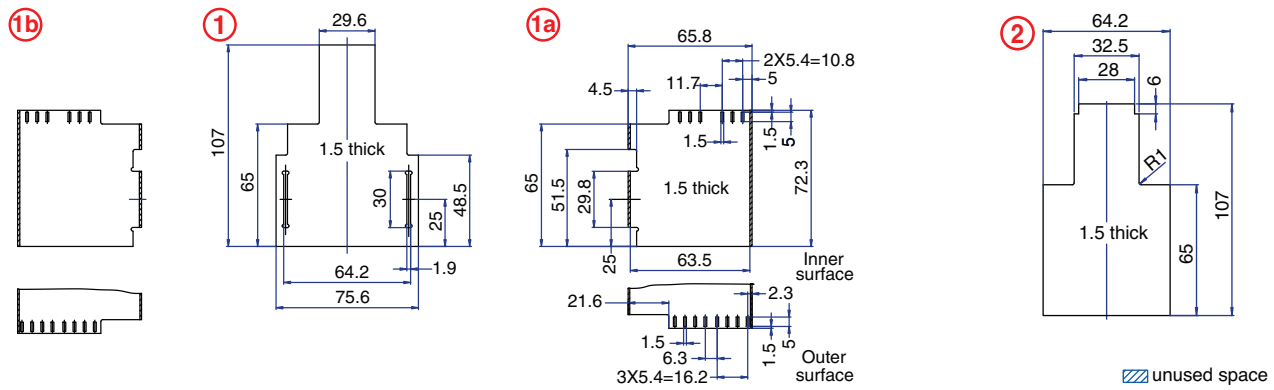

## 40 Terminal Maximum

**with 12 High Current Terminals**

**Pluggable Card Edge Connection/ Solder Connection**

## TECHNICAL INFORMATION

**Electrical:**
see chart for Amperages, 300V, 22-12 AWG standard 18-8 AWG high current

**Housing Material:**
Glass-filled Polycarbonate

**Cover Material:**
Glass-filled Polycarbonate

**Temperature Range:**
Up to 125°C (257°F)

**Flammability Rating:**
UL94 V-O (V-2 Clear Panel)

**Color:**
Black Housing with Tan Cover

**Terminal Type:**
Box clamp

**Terminal Screw Size:**
M3.5

**Recommended Torque:**
0.8Nm

**Max. PCB's:**
(4) Vertical
(2) Horizontal
(1) Parallel with cover

**Mounting:**
35mm DIN Rail or optional panel mounting*

## COMPLETE ENCLOSURE CONSISTS OF

(1) Base Housing
(1) Center Cover
(4) Terminal or blanking blocks
(4) High current terminal blocks

## ORDERING INFORMATION

| Part Number | Type | Description |
|---|---|---|
| 90.845 | KO4737H | Base Housing |
| 90.845.6 | KO4737F | Center Cover |
| 90.803 | KO473xT/3 | Terminal Block, 3 terminals |
| 90.804 | KO473xT/4 | Terminal Block, 4 terminals |
| 90.807 | KO473xT/7 | Terminal Block, 7 terminals |
| 90.800 | KO473xT/B | Blanking Block, 0 terminals |
| 90.808 | KO473xHCT | High Current Block, 3 terminals |

## ENCLOSURE DRAWING (To convert to inches divide by 25.4.)

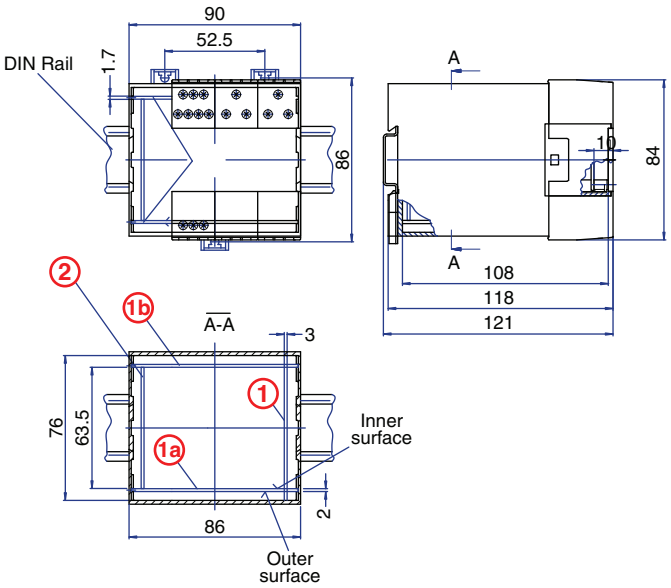


## ACCESSORIES

| Accessories | Part Number | Type |
|---|---|---|
| 1 Meter DIN Rail | 2511120/1M | TS35x7.5/1M |
| *Panel Mount Tab (need 2) | 93.001.2 | PMA |

## AMPERAGE CHART

**Max. Current Carrying Capacity of Terminal Blocks**

| | 3 pole | 4 pole | 7 pole | High Current |
|---|---|---|---|---|
| Max Amperage of Terminal Blocks | 15A | 28A | 15A top row<br>28A bottom row | 40A |
| Max Amperage Per Terminal Point | 8A | 8A | 5A top row<br>8A bottom row | 40A |

## PCB DRAWING (To convert to inches divide by 25.4.)

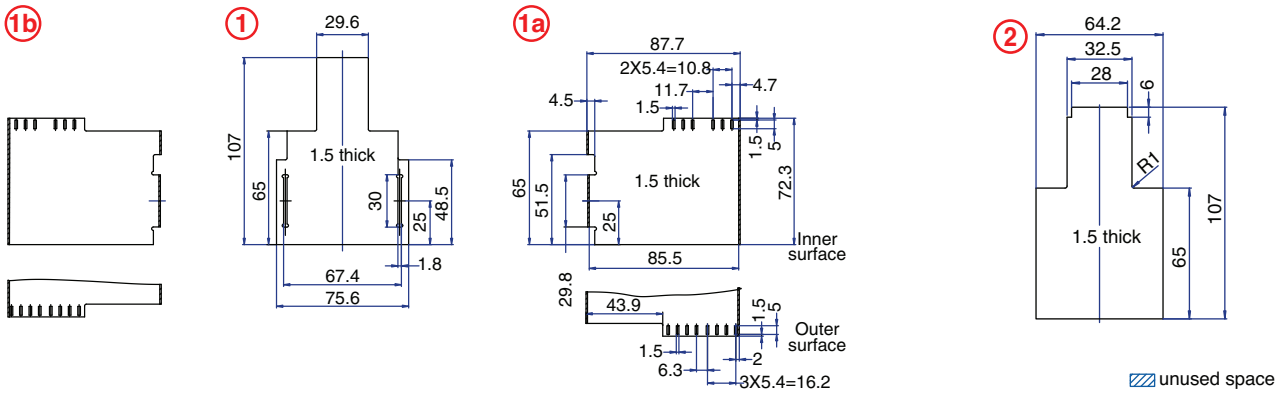

## 42 Terminal Maximum

**Pluggable Card Edge Connection**

## TECHNICAL INFORMATION

**Electrical:**
see chart for Amperages, 300V, 22-12 AWG

**Housing Material:**
Glass-filled Polycarbonate

**Cover Material:**
Glass-filled Polycarbonate

**Temperature Range:**
Up to 125°C (257°F)

**Flammability Rating:**
UL94 V-O (V-2 Clear Panel)

**Color:**
Black Housing with Tan Cover

**Terminal Type:**
Box clamp

**Terminal Screw Size:**
M3.5

**Recommended Torque:**
0.8Nm

**Max. PCB's:**
(3) Vertical
(2) Horizontal
(1) Parallel with cover

**Mounting:**
35mm DIN Rail or optional panel mounting*

## COMPLETE ENCLOSURE CONSISTS OF

(1) Base Housing
(1) Cover Frame
(1) Cover Panel
(6) Terminal or blanking blocks

## ORDERING INFORMATION

| Part Number | Type | Description |
|---|---|---|
| 90.830 | KO4732/6H | Base Housing |
| 90.830.1 | KO4732F | Cover Frame |
| 90.830.2 | KO4732P | Cover Panel, Tan |
| 90.830.3 | KO4732P-C | Cover Panel, Clear |
| 90.830.4 | KO4732P/S | Cover Panel with terminal release slots, Tan |
| 90.830.5 | KO4732P-C/S | Cover Panel with terminal release slots, Clear |
| 90.803 | KO473xT/3 | Terminal Block, 3 terminals |
| 90.804 | KO473xT/4 | Terminal Block, 4 terminals |
| 90.807 | KO473xT/7 | Terminal Block, 7 terminals |
| 90.800 | KO473xT/B | Blanking Block, 0 terminals |

## ACCESSORIES

| Accessories | Part Number | Type |
|---|---|---|
| 1 Meter DIN Rail | 2511120/1M | TS35x7.5/1M |
| *Panel Mount Tab (need 2) | 93.001.2 | PMA |

## AMPERAGE CHART

**Max. Current Carrying Capacity of Terminal Blocks**

| | 3 pole ○○○ | 4 pole ○○○○ | 7 pole ○○○ ○○○○ |
|---|---|---|---|
| Max Amperage of Terminal Blocks | 15A | 28A | 15A top row<br>28A bottom row |
| Max Amperage Per Terminal Point | 5A | 8A | 5A top row<br>8A bottom row |

## ENCLOSURE DRAWING (To convert to inches divide by 25.4.)

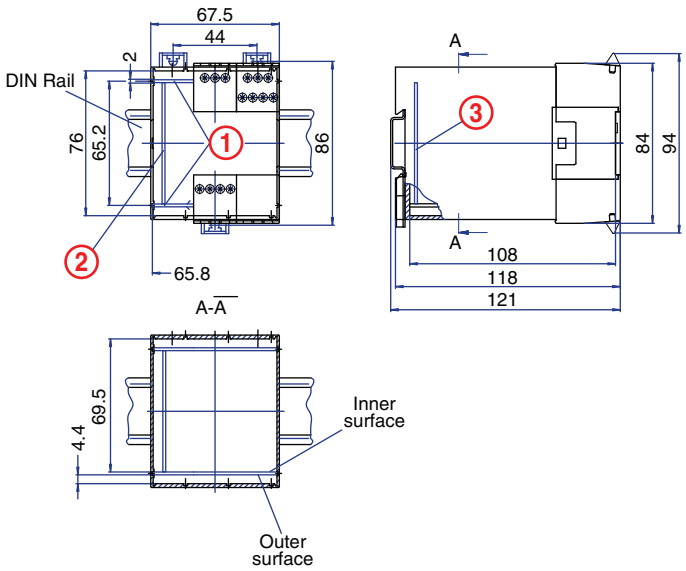


## PCB DRAWING (To convert to inches divide by 25.4.)

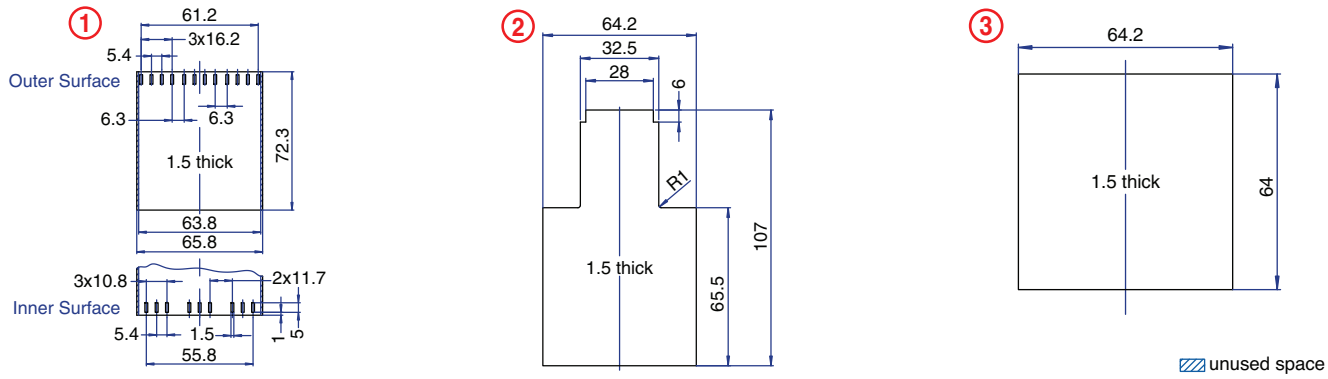

## 56 Terminal Maximum

**Pluggable Card Edge Connection**

## TECHNICAL INFORMATION

**Electrical:**
see chart for Amperages, 300V, 22-12 AWG

**Housing Material:**
Glass-filled Polycarbonate

**Cover Material:**
Glass-filled Polycarbonate

**Temperature Range:**
Up to 125°C (257°F)

**Flammability Rating:**
UL94 V-O (V-2 Clear Panel)

**Color:**
Black Housing with Tan Cover

**Terminal Type:**
Box clamp

**Terminal Screw Size:**
M3.5

**Recommended Torque:**
0.8Nm

**Max. PCB's:**
(4) Vertical
(2) Horizontal
(1ea.) Parallel with/ behind cover

**Mounting:**
35mm DIN Rail or optional panel mounting*

## COMPLETE ENCLOSURE CONSISTS OF

(1) Base Housing
(1) Cover Frame
(1) Cover Panel
(8) Terminal or blanking blocks

## ORDERING INFORMATION

| Part Number | Type | Description |
|---|---|---|
| 90.840 | KO4733H | Base Housing |
| 90.840.1 | KO4733F | Cover Frame |
| 90.840.2 | KO4733P | Cover Panel, Tan |
| 90.840.3 | KO4733P-C | Cover Panel, Clear |
| 90.840.4 | KO4733P/S | Cover Panel with terminal release slots, Tan |
| 90.840.5 | KO4733P-C/S | Cover Panel with terminal release slots, Clear |
| 90.803 | KO473xT/3 | Terminal Block, 3 terminals |
| 90.804 | KO473xT/4 | Terminal Block, 4 terminals |
| 90.807 | KO473xT/7 | Terminal Block, 7 terminals |
| 90.800 | KO473xT/B | Blanking Block, 0 terminals |

## ENCLOSURE DRAWING (To convert to inches divide by 25.4.)

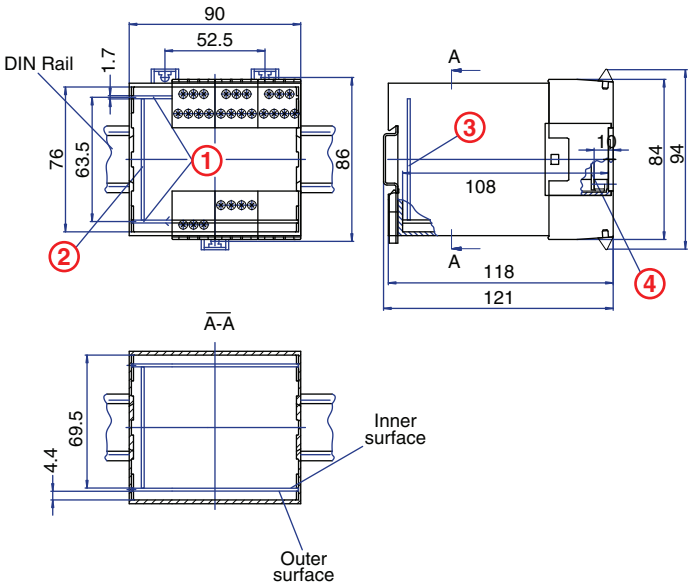


## ACCESSORIES

| Accessories | Part Number | Type |
|---|---|---|
| 1 Meter DIN Rail | 2511120/1M | TS35x7.5/1M |
| *Panel Mount Tab (need 2) | 93.001.2 | PMA |

## AMPERAGE CHART

**Max. Current Carrying Capacity of Terminal Blocks**

| | 3 pole ○○○ | 4 pole ○○○○ | 7 pole ○○○ ○○○○ |
|---|---|---|---|
| Max Amperage of Terminal Blocks | 15A | 28A | 15A top row<br>28A bottom row |
| Max Amperage Per Terminal Point | 5A | 8A | 5A top row<br>8A bottom row |

## PCB DRAWING (To convert to inches divide by 25.4.)

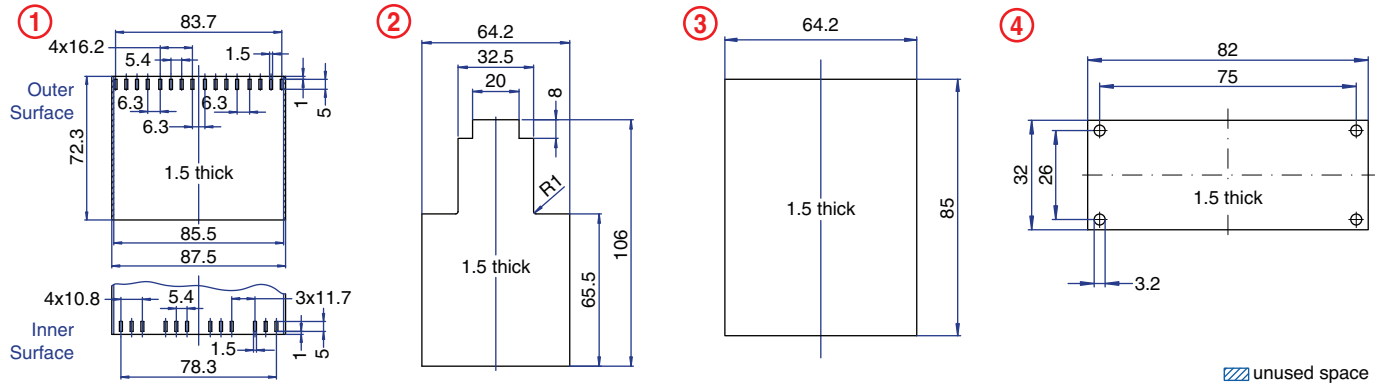

# K70 Series

The K70 series enclosures are small to medium in size and offer cost effective solutions for many applications.

They can accommodate 8 to 32 terminals for field wire connections. Pressure plate terminals are standard with both the fixed and pluggable versions.

## MATERIALS

***Housing***

Housing Shell: Polycarbonate, 10% Glass-filled
Housing Cover: Polycarbonate, 10% Glass-filled

***Terminals***

Pressure Plate: Chromated Steel
Terminal Screw: Chromated Steel
Connector Contact: Tin Plated Bronze

**Temperature Rating:** 125°C (257°F) UL94VO
**Standard Color:** Light Gray

## PROTECTION

K7O enclosures have an IP10 rating (hand protected). By using optional terminal covers the protection rating can be increased to IP20 (finger protected). VBG4 and other European accident prevention requirements are met.

## CONSTRUCTION

The K70 enclosures are supplied as unassembled kits. Each kit consists of a housing shell and a snap-on cover, complete with integral terminals and terminal-to-board connection provisions. Integral printed circuit board guides are molded into the housing shell to save time when inserting boards, to prevent misconnections and to keep the boards in place. Integral tabs on the bottom of the shell further help to hold the boards in place and eliminate lateral movement and warpage.

Printed circuit boards can be mounted in three ways:

- Vertically
- Horizontally
- Behind the Front Cover

Boards can be placed vertically (perpendicular to the DIN rail) and/or horizontally (parallel with the DIN rail). Enclosures with plug-in covers can accept an additional board mounted directly behind the front cover. This board is ideal for mounting indicating devices such as LEDs, LCDs for monitoring, switches and potentiometers for setting and adjusting purposes. The housing cover snaps onto the housing shell. Two tabs lock the cover firmly in place. Removal of the cover is possible for service and repair. Potting is possible.

The K70 housing covers have external and internal barriers between terminals to increase creepage distance and to help prevent accidental touching of live potentials that may be present. Optional terminal covers that decrease the size of the opening are available as accessories.

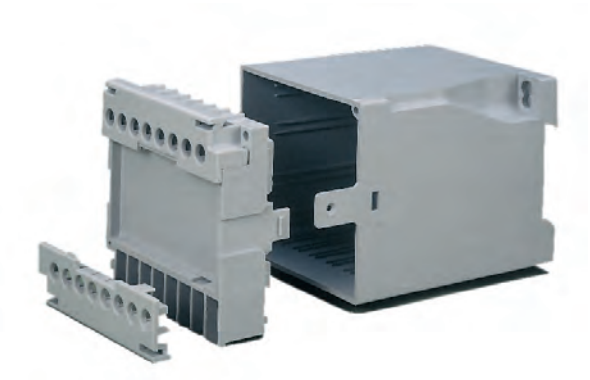

## TERMINALS

Pressure Plate terminals with either fixed or pluggable terminal-to-board connections are offered in the K70 enclosures. The pressure plate, which is captive to the terminal screw, automatically rises when the screw is loosened. One or two wires of equal or different sizes up to 2.5mm$^2$ (14 AWG) can be terminated in each terminal. The grooved corners of the pressure plate ensure positive wire retention. The flat bottom of the terminal extends to the inside of the enclosure and provides the terminal-to-board connection. The terminal screws can be turned by a flat tip or a #2 Phillips screwdriver.

Upon request, terminals can be loaded in selected positions only.

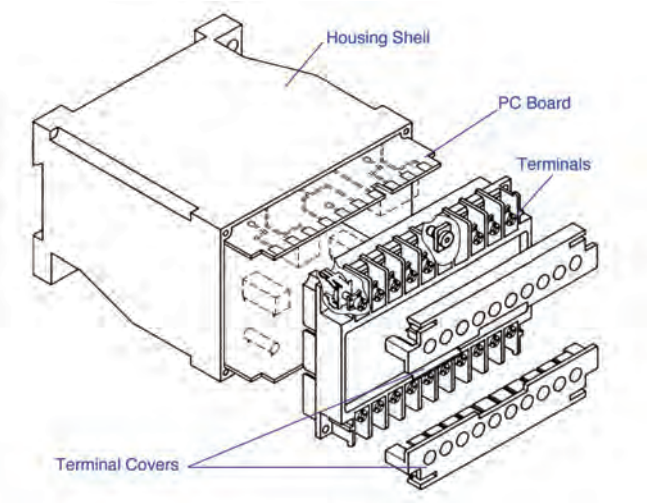


## TERMINAL-TO-BOARD CONNECTIONS

The K70 series offers fixed and pluggable terminal-to-board connection possibilities.

### Fixed Connections

Fixed terminal-to-board connections can be made by Wire Jumper, Fast On tabs or Machine Solderable Pins (K7022.5C only).

***Fast On*** tabs, (2.8 x 0.8 mm) accept industry standard Fast On connectors crimped onto wire jumpers.

***Wire Jumper*** connections can also be made by soldering a wire jumper between the center holes of the Fast On tab and the printed circuit board(s).

***Machine Solderable Pins*** (offered only with type K7022.5C) can be removed from the enclosure and machine soldered to the board in the same step as other components, saving assembly time.

### Pluggable Connections

Pluggable terminal-to-board connections are made by using ***Card Edge*** connectors. They are an integral part of the covers of K7075P, K70100P and K70150P and plug directly onto the board(s). ***Solder Pins*** are also provided in these enclosures for terminal-to-board connections when mounting an additional board directly behind the front cover. A ***Wire Jumper*** can be soldered to these pins as well.

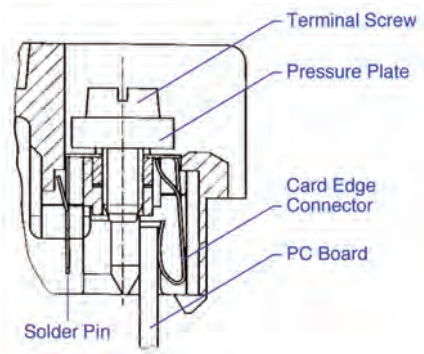


For better retention, the plug-in type covers have captive screws at the corners that insert into brass bushings, molded into the housing shell. The pluggable versions are ideal whenever quick connections and replacement are important. They also reduce the danger of misconnected wires and downtime.

## MOUNTING

The K70 Enclosures mount easily by snapping onto standard 35mm DIN Rail. Many can also be panel mounted using corner mounting holes which accept two M4 or M5 (#6 or #10) screws. These mounting holes are molded into two corners of the housing shell base and do not increase the height or width of the enclosure, thus insuring a compact, high density arrangement when multiple enclosures are installed adjacent to each other. Enclosure types K7022.5A, K7022.5B and K7022.5C have two integral pull-out tabs on the base of the enclosure for panel mounting. (Refer to Enclosure Mounting Procedures on page 49.)

## MARKING

The K70 enclosures have an area on the front of the cover for marking and mounting of components such as switches, potentiometers, LEDs or LCD indicators. Custom imprinted plates can be inserted as well, allowing imprinting of plates separate from the enclosure, reducing cost and delays.

## ACCESSORIES

- 35 x 7.5 mm DIN Rail
- Terminal Covers
- Pull-Out Panel Mounting Tabs.

## CUSTOMIZATION

Enclosures can be customized with cutouts and holes for potentiometers, switches, LEDs, LCDs and other devices. Using state of the art machining, we can punch, drill or cut to your most exacting specifications. Custom colors and special markings are also available. Please let us know what your requirements are.

## 8 Terminal
### Solder/Tab Connection

### TECHNICAL INFORMATION

**Electrical:**
25A, 300V, 24-14 AWG
**Housing Material:**
Glass-filled Polycarbonate
**Cover Material:**
Glass-filled Polycarbonate
**Temperature Range:**
Up to 125°C (257°F)
**Flammability Rating:**
UL94 V-O
**Color:**
Light Gray

**Terminal Type:**
Pressure Plate
**Terminal Screw Size:**
M2.5
**Recommended Torque:**
0.8Nm
**PCB Locations:**
(2) Vertical
**Mounting:**
35mm DIN Rail or panel mount

### ORDERING INFORMATION

| Part Number | Type | Description | PCB Connection |
|---|---|---|---|
| 90.001 | K7022.5A | Double Level Terminals | Wire Jumper/ Fast On |

### ACCESSORIES

| Accessories | Part Number | Type |
|---|---|---|
| DIN Rail | 2511120/1M | TS35x7.5/1M |
| Terminal Covers* | 90.001.1/90.001.2 | K7022.5A/TC1,TC2 |

### ENCLOSURE DRAWING (To convert to inches divide by 25.4.)

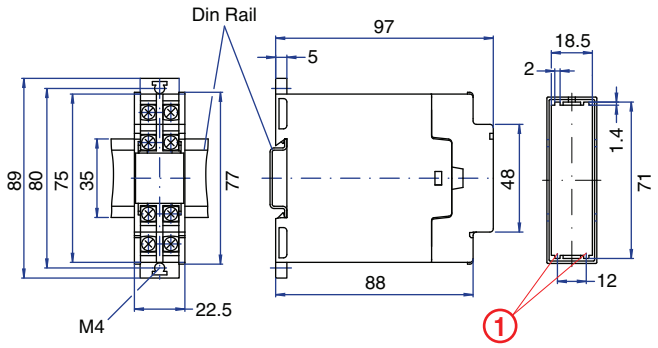


### PCB DRAWING (To convert to inches divide by 25.4.)

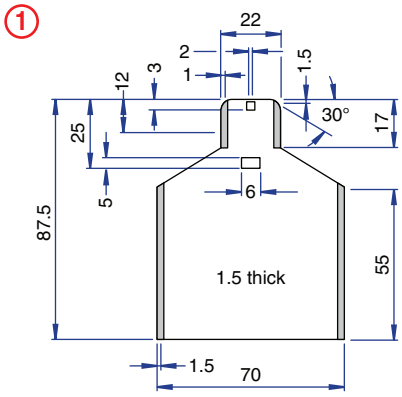


* Note: Need one of each Terminal Cover.

unused space

## 10 Terminal
### Solder/Tab Connection

### TECHNICAL INFORMATION

**Electrical:**
25A, 300V, 22-14 AWG
**Housing Material:**
Glass-filled Polycarbonate
**Cover Material:**
Glass-filled Polycarbonate
**Temperature Range:**
Up to 125°C (257°F)
**Flammability Rating:**
UL94 V-O
**Color:**
Light Gray

**Terminal Type:**
Pressure Plate
**Terminal Screw Size:**
M3.5
**Recommended Torque:**
0.8Nm
**PCB Locations:**
(10) Vertical
**Mounting:**
35mm DIN Rail or panel mount

### ORDERING INFORMATION

| Part Number | Type | Description | PCB Connection |
|---|---|---|---|
| 90.010 | K7045C | Single Level Terminals | Wire Jumper/ Fast On |

### ACCESSORIES

| Accessories | Part Number | Type |
|---|---|---|
| DIN Rail | 2511120/1M | TS35x7.5/1M |
| Terminal Cover** | 90.010.1 | K7045C/TC1 |

### ENCLOSURE DRAWING (To convert to inches divide by 25.4.)

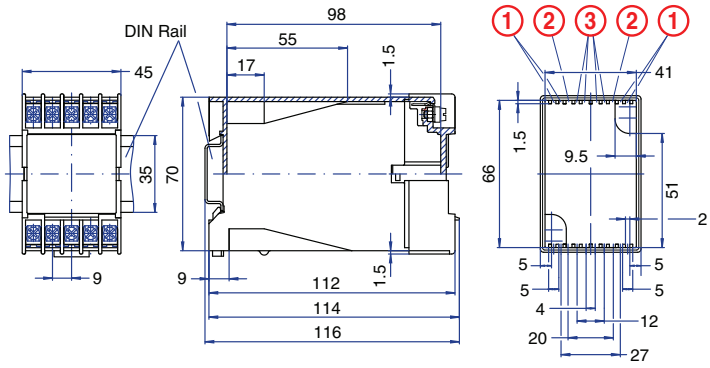


### PCB DRAWING (To convert to inches divide by 25.4.)

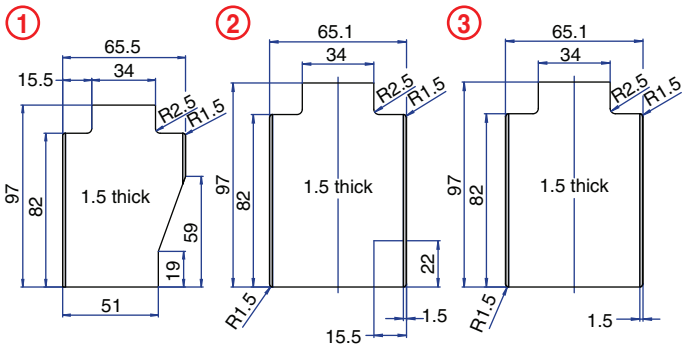


** Note: One piece Teminal Cover covers both sides.

unused space

## 12 Terminal
### Solder/Tab Connection

### TECHNICAL INFORMATION

**Electrical:**
20A, 300V, 24-14 AWG
**Housing Material:**
Glass-filled Polycarbonate
**Cover Material:**
Glass-filled Polycarbonate
**Temperature Range:**
Up to 125°C (257°F)
**Flammability Rating:**
UL94 V-O
**Color:**
Light Gray

**Terminal Type:**
Pressure Plate
**Terminal Screw Size:**
M2.5
**Recommended Torque:**
0.8Nm
**PCB Locations:**
(2) Vertical
**Mounting:**
35mm DIN Rail or panel mount

### ORDERING INFORMATION

| Part Number | Type | Description | PCB Connection |
|---|---|---|---|
| 90.020 | K7022.5B | Double Level Terminals | Wire Jumper/ Fast On |

### ACCESSORIES

| Accessories | Part Number | Type |
|---|---|---|
| DIN Rail | 2511120/1M | TS35x7.5/1M |
| Terminal Covers* | 90.020.1/90.020.2 | K7022.5BTC1/TC2 |

### ENCLOSURE DRAWING (To convert to inches divide by 25.4.)

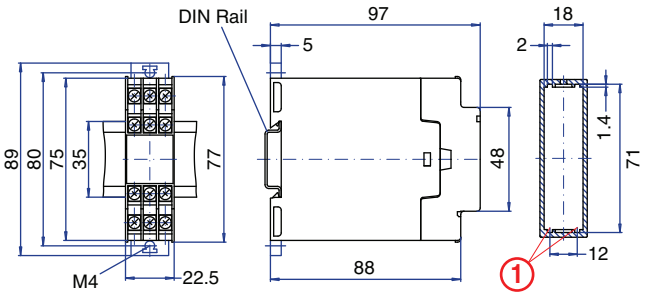


### PCB DRAWING (To convert to inches divide by 25.4.)

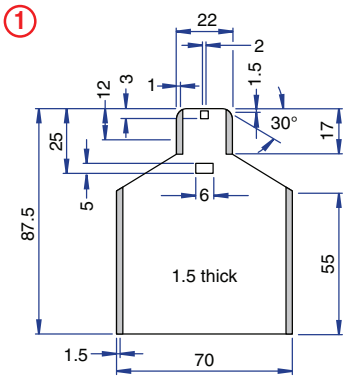


* Note: Need one of each Terminal Cover.

unused space

## 12 Terminal
### Solder Connection

### TECHNICAL INFORMATION

**Electrical:**
20A, 300V, 22-14 AWG
**Housing Material:**
Glass-filled Polycarbonate
**Cover Material:**
Glass-filled Polycarbonate
**Temperature Range:**
Up to 125°C (257°F)
**Flammability Rating:**
UL94 V-O
**Color:**
Light Gray

**Terminal Type:**
Pressure Plate
**Terminal Screw Size:**
M3.5
**Recommended Torque:**
0.8Nm
**PCB Locations:**
(2) Vertical
**Mounting:**
35mm DIN Rail or panel mount

### ORDERING INFORMATION

| Part Number | Type | Description | PCB Connection |
|---|---|---|---|
| 90.030 | K7022.5C | Shrouded Double Level Terminals | Wire Jumper/ Machine Solderable Pins |

### ACCESSORIES

| Accessories | Part Number | Type |
|---|---|---|
| DIN Rail | 2511120/1M | TS35x7.5/1M |

### ENCLOSURE DRAWING (To convert to inches divide by 25.4.)

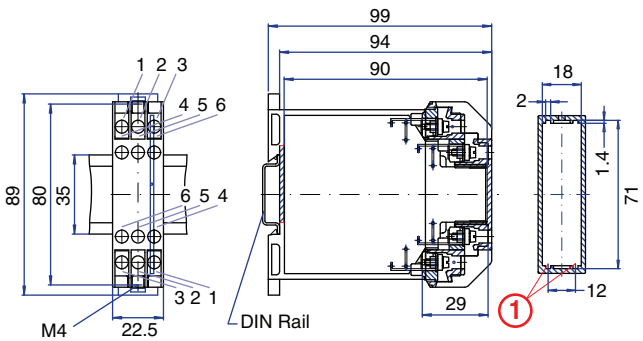


### PCB DRAWING (To convert to inches divide by 25.4.)

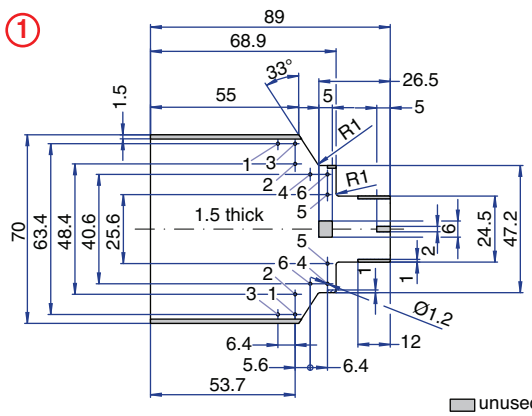


unused space

## 12 Terminal
### Solder/Tab Connection

### TECHNICAL INFORMATION

**Electrical:**
25A, 300V, 22-14 AWG
**Housing Material:**
Glass-filled Polycarbonate
**Cover Material:**
Glass-filled Polycarbonate
**Temperature Range:**
Up to 125°C (257°F)
**Flammability Rating:**
UL94 V-O
**Color:**
Light Gray

**Terminal Type:**
Pressure Plate
**Terminal Screw Size:**
M3.5
**Recommended Torque:**
0.8Nm
**PCB Locations:**
(5) Vertical
(1) Behind Cover
**Mounting:**
35mm DIN Rail

### ORDERING INFORMATION

| Part Number | Type | Description | PCB Connection |
|---|---|---|---|
| 90.040 | K7055 | Single Level Terminals | Wire Jumper/ Fast On |

### ACCESSORIES

| Accessories | Part Number | Type |
|---|---|---|
| DIN Rail | 2511120/1M | TS35x7.5/1M |
| Terminal Covers* | 90.040.1 | K7055/TC1 |

### ENCLOSURE DRAWING (To convert to inches divide by 25.4.)

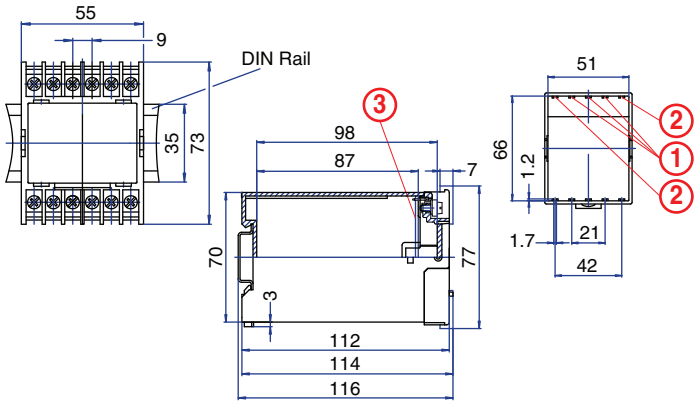


### PCB DRAWING (To convert to inches divide by 25.4.)

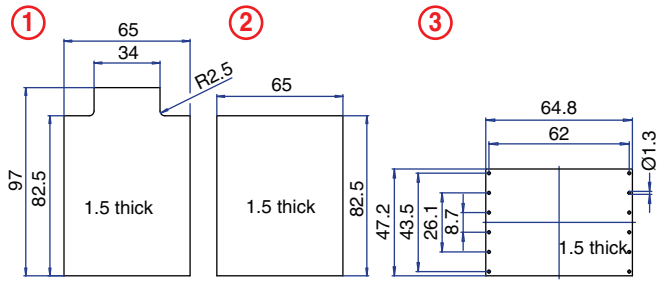


* Note: Need two Terminal Covers.

unused space

## 16 Terminal
### Pluggable Connection

### TECHNICAL INFORMATION

**Electrical:**
10A, 300V, 22-14 AWG
**Housing Material:**
Glass-filled Polycarbonate
**Cover Material:**
Glass-filled Polycarbonate
**Temperature Range:**
Up to 125°C (257°F)
**Flammability Rating:**
UL94 V-O
**Color:**
Light Gray

**Terminal Type:**
Pressure Plate
**Terminal Screw Size:**
M3.5
**Recommended Torque:**
0.8Nm
**PCB Locations:**
(7) Vertical (6) Horizontal
(1) Behind Cover
**Mounting:**
35mm DIN Rail or panel mount

### ORDERING INFORMATION

| Part Number | Type | Description | PCB Connection |
|---|---|---|---|
| 90.050 | K7075P | Single Level Terminals | Wire Jumper/ Solder Pin/ Card Edge |

### ACCESSORIES

| Accessories | Part Number | Type |
|---|---|---|
| DIN Rail | 2511120/1M | TS35x7.5/1M |
| Terminal Cover* | 90.050.1 | K7075P/TC1 |

### ENCLOSURE DRAWING (To convert to inches divide by 25.4.)

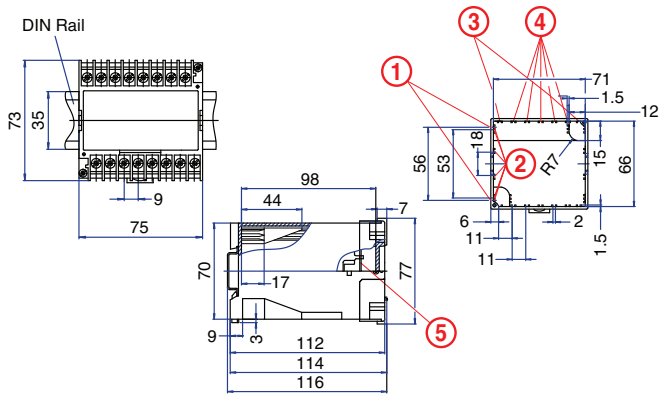


### PCB DRAWING (To convert to inches divide by 25.4.)

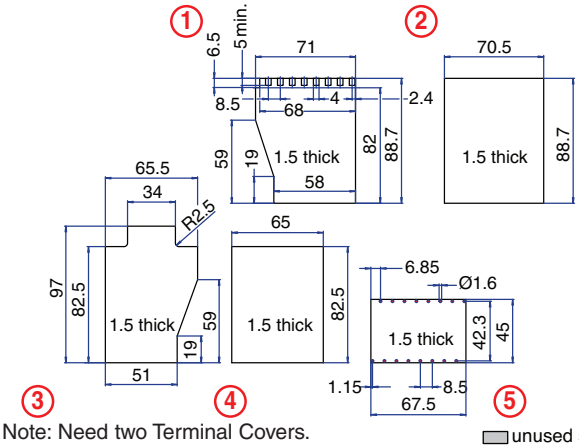


* Note: Need two Terminal Covers.

unused space

## 16 Terminal

### Pluggable Connection (DIN Rail Mount Only)

### TECHNICAL INFORMATION

**Electrical:**
10A, 300V, 22-14 AWG
**Housing Material:**
Glass-filled Polycarbonate
**Cover Material:**
Glass-filled Polycarbonate
**Temperature Range:**
Up to 125°C (257°F)
**Flammability Rating:**
UL94 V-O
**Color:**
Light Gray

**Terminal Type:**
Pressure Plate
**Terminal Screw Size:**
M3.5
**Recommended Torque:**
0.8Nm
**PCB Locations:**
(7) Vertical (6) Horizontal
(1) Behind Cover
**Mounting:**
35mm DIN Rail

### ORDERING INFORMATION

| Part Number | Type | Description | PCB Connection |
|---|---|---|---|
| 90.050.5 | K7075P | Single Level Terminals | Wire Jumper/ Solder Tab/ Card Edge |

### ACCESSORIES

| Accessories | Part Number | Type |
|---|---|---|
| DIN Rail | 2511120/1M | TS35x7.5/1M |
| Terminal Covers* | 90.050.1 | K7075P/TC1 |

### ENCLOSURE DRAWING (To convert to inches divide by 25.4.)

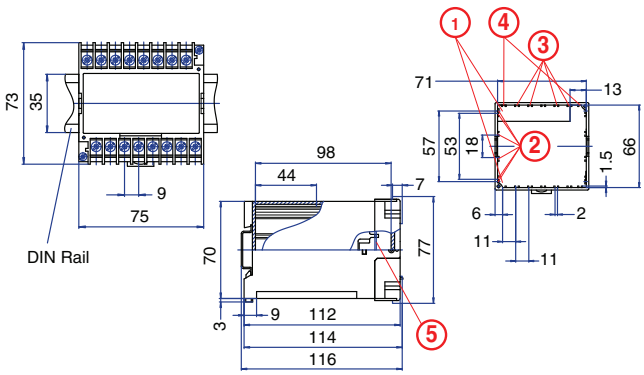


### PCB DRAWING (To convert to inches divide by 25.4.)

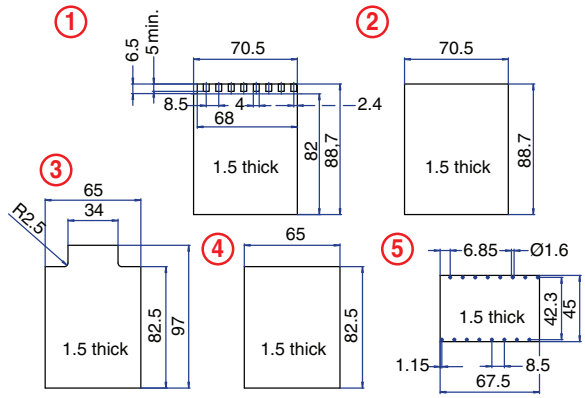


* Note: Need two Terminal Covers.

unused space

## 20 Terminal

### Solder/Tab Connection

### TECHNICAL INFORMATION

**Electrical:**
25A, 300V, 22-14 AWG
**Housing Material:**
Glass-filled Polycarbonate
**Cover Material:**
Glass-filled Polycarbonate
**Temperature Range:**
Up to 125°C (257°F)
**Flammability Rating:**
UL94 V-O
**Color:**
Light Gray

**Terminal Type:**
Pressure Plate
**Terminal Screw Size:**
M3.5
**Recommended Torque:**
0.8Nm
**PCB Locations:**
(10) Vertical
**Mounting:**
35mm DIN Rail or panel mount

### ORDERING INFORMATION

| Part Number | Type | Description | PCB Connection |
|---|---|---|---|
| 90.060 | K7045D1 | Double Level Terminals | Wire Jumper/ Fast On |

### ACCESSORIES

| Accessories | Part Number | Type |
|---|---|---|
| DIN Rail | 2511120/1M | TS35x7.5/1M |

### ENCLOSURE DRAWING (To convert to inches divide by 25.4.)

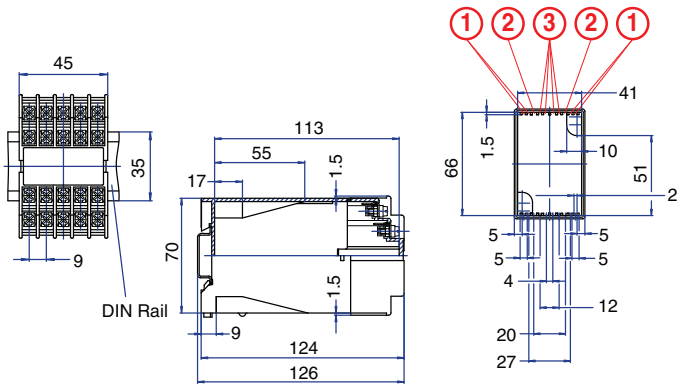


### PCB DRAWING (To convert to inches divide by 25.4.)

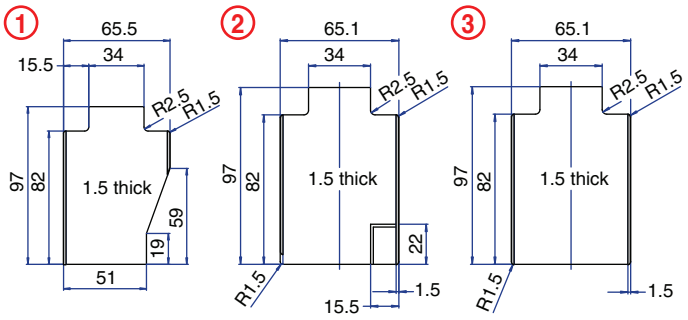


unused space

## 20 Terminal
### Solder/Tab Connection

### TECHNICAL INFORMATION

**Electrical:**
25A, 300V, 22-14 AWG
**Housing Material:**
Glass-filled Polycarbonate
**Cover Material:**
Glass-filled Polycarbonate
**Temperature Range:**
Up to 125°C (257°F)
**Flammability Rating:**
UL94 V-O
**Color:**
Light Gray

**Terminal Type:**
Pressure Plate
**Terminal Screw Size:**
M3.5
**Recommended Torque:**
0.8Nm
**PCB Locations:**
(10) Vertical
**Mounting:**
35mm DIN Rail or panel mount

### ORDERING INFORMATION

| Part Number | Type | Description | PCB Connection |
|---|---|---|---|
| 90.070 | K7045D2 | Shrouded Double Level Terminals | Wire Jumper/ Fast On |

### ACCESSORIES

| Accessories | Part Number | Type |
|---|---|---|
| DIN Rail | 2511120/1M | TS35x7.5/1M |
| Terminal Covers* | | |

### ENCLOSURE DRAWING (To convert to inches divide by 25.4.)

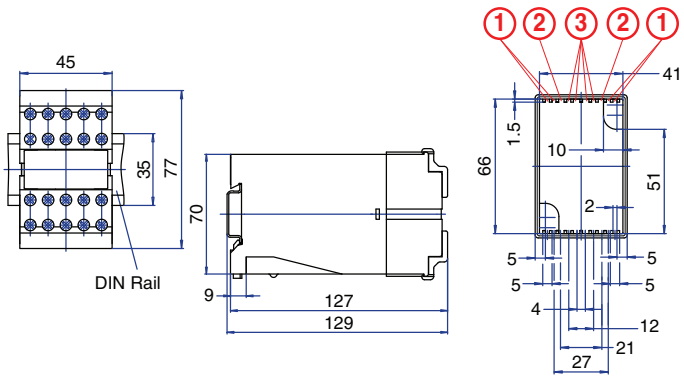


### PCB DRAWING (To convert to inches divide by 25.4.)

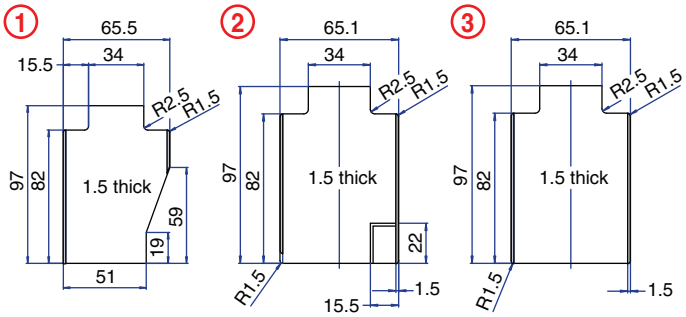


* Note: Integral Terminal Covers.

unused space

## 20 Terminal
### Solder/Tab Connection

### TECHNICAL INFORMATION

**Electrical:**
25A, 300V, 22-14 AWG
**Housing Material:**
Glass-filled Polycarbonate
**Cover Material:**
Glass-filled Polycarbonate
**Temperature Range:**
Up to 125°C (257°F)
**Flammability Rating:**
UL94 V-O
**Color:**
Light Gray

**Terminal Type:**
Pressure Plate
**Terminal Screw Size:**
M3.5
**Recommended Torque:**
0.8Nm
**PCB Locations:**
(4) Vertical (6) Horizontal
**Mounting:**
35mm DIN Rail or panel mount

### ORDERING INFORMATION

| Part Number | Type | Description | PCB Connection |
|---|---|---|---|
| 90.080 | K70100A | Single Level Terminals | Wire Jumper/ Fast On |

### ACCESSORIES

| Accessories | Part Number | Type |
|---|---|---|
| DIN Rail | 2511120/1M | TS35x7.5/1M |
| Terminal Cover** | 90.080.1 | K70100/TC1 |

### ENCLOSURE DRAWING (To convert to inches divide by 25.4.)

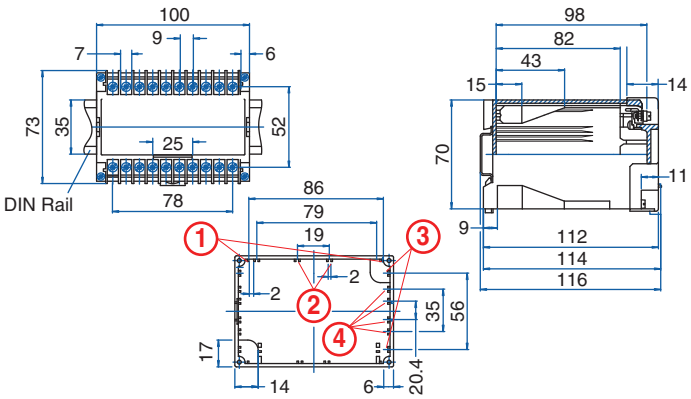


### PCB DRAWING (To convert to inches divide by 25.4.)

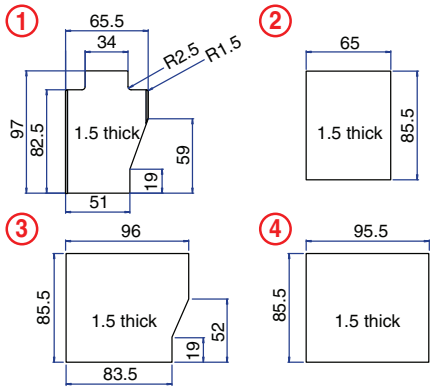


** Note: Need two Terminal Covers.

unused space

## 20 Terminal
### Pluggable Connection

### TECHNICAL INFORMATION

**Electrical:**
10A, 300V, 22-14 AWG
**Housing Material:**
Glass-filled Polycarbonate
**Cover Material:**
Glass-filled Polycarbonate
**Temperature Range:**
Up to 125°C (257°F)
**Flammability Rating:**
UL94 V-O
**Color:**
Light Gray

**Terminal Type:**
Pressure Plate
**Terminal Screw Size:**
M3.5
**Recommended Torque:**
0.8Nm
**PCB Locations**
(4) Vertical (6) Horizontal
(1) Behind Cover
**Mounting:**
35mm DIN Rail or panel mount

### ORDERING INFORMATION

| Part Number | Type | Description | PCB Connection |
|---|---|---|---|
| 90.090 | K70100P | Single Level Terminals | Wire Jumper/ Solder Pin/ Card Edge |

### ACCESSORIES

| Accessories | Part Number | Type |
|---|---|---|
| DIN Rail | 2511120/1M | TS35x7.5/1M |
| Terminal Covers* | 90.080.1 | K70100/TC1 |

### ENCLOSURE DRAWING (To convert to inches divide by 25.4.)

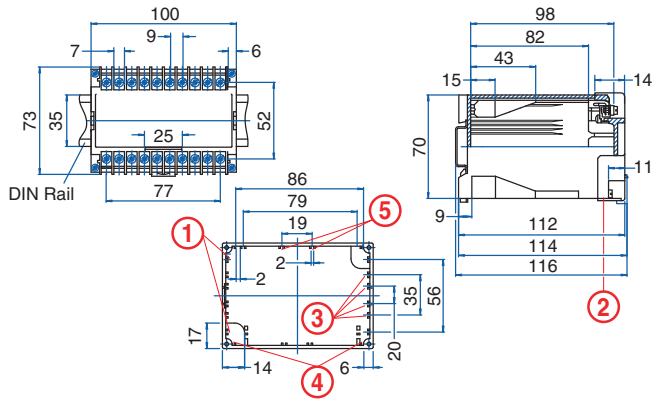


### PCB DRAWING (To convert to inches divide by 25.4.)

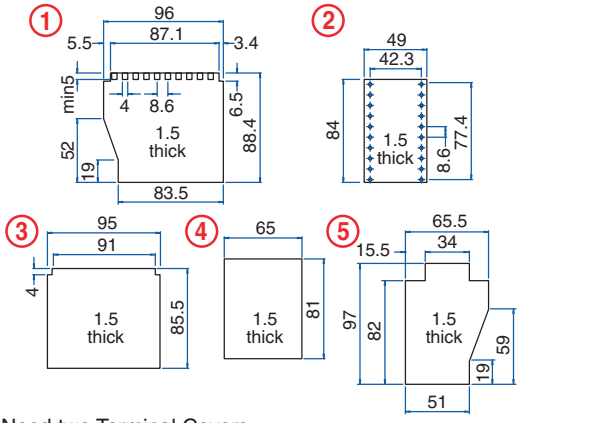


* Note: Need two Terminal Covers.

unused space

## 32 Terminal
### Pluggable Connection

### TECHNICAL INFORMATION

**Electrical:**
10A, 300V, 22-14 AWG
**Housing Material:**
Glass-filled Polycarbonate
**Cover Material:**
Glass-filled Polycarbonate
**Temperature Range:**
Up to 125°C (257°F)
**Flammability Rating:**
UL94 V-O
**Color:**
Light Gray

**Terminal Type:**
Pressure Plate
**Terminal Screw Size:**
M3.5
**Recommended Torque:**
0.8Nm
**PCB Locations**
(9) Vertical (6) Horizontal
(1) Behind Cover
**Mounting:**
35mm DIN Rail or panel mount

### ORDERING INFORMATION

| Part Number | Type | Description | PCB Connection |
|---|---|---|---|
| 90.100 | K70150P | Single Level Terminals | Wire Jumper/ Solder Pin/ Card Edge |

### ACCESSORIES

| Accessories | Part Number | Type |
|---|---|---|
| DIN Rail | 2511120/1M | TS35x7.5/1M |
| Terminal Cover* | 90.100.1 | K70150P/TC1 |

### ENCLOSURE DRAWING (To convert to inches divide by 25.4.)

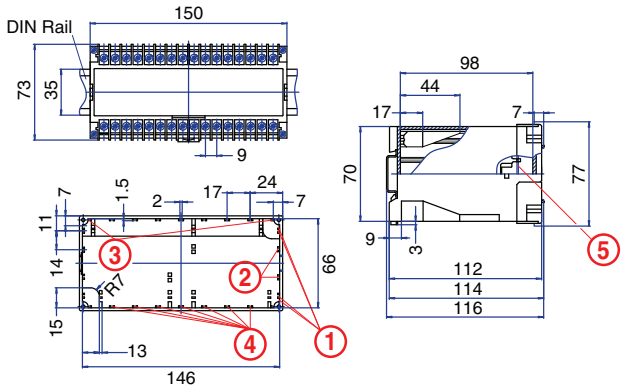


### PCB DRAWING (To convert to inches divide by 25.4.)

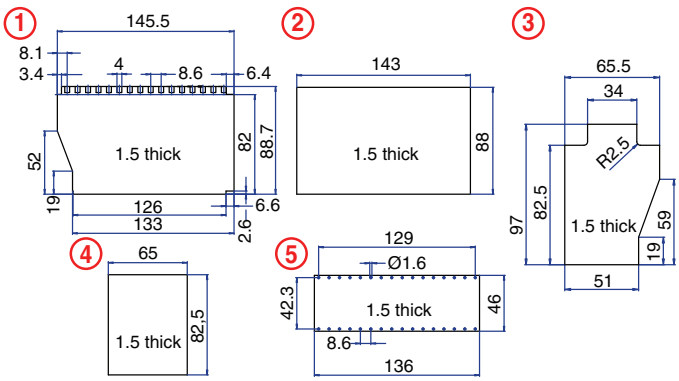


* Note: Need two Terminal Covers.

unused space

# KU4000 Series

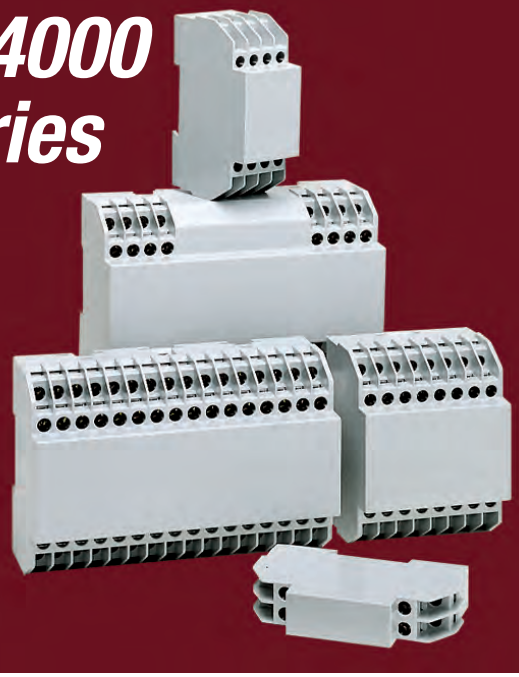

Versatile, compact enclosures are ideal for applications with space constraints and for mounting within large international style enclosures with 45mm (1.77 in.) cutouts, such as Altech's EK and AK series nonmetallic enclosures. Small to medium in size, KU4000 enclosures offer 8 to 64 terminals for field wire connections. Pressure plate or spring cage terminals are standard. The KU4000 series are equipped with double level terminals which provide a maximum number of external connections in a minimal amount of space. Standard enclosures are supplied as kits, containing the base, cover and the maximum number of terminals.

## MATERIALS

### *Housing*

Housing Shell: Polycarbonate, 10% Glass Filled
Base: Polycarbonate, 10% Glass Filled

### *Terminals*

Terminal Pins: Tinned Steel
Pressure Plate: Chromated Steel
Terminal Screws: Chromated Steel
Spring Clamps: Stainless Steel

**Temperature Rating:** 110°C (230°F) UL94VO
Standard Color: Light Gray

## PROTECTION

KU4000 enclosures have an IP20 rating (finger protected) and meet VBG4 and other European accident prevention requirements.

## CONSTRUCTION

The KU4000 series housings are supplied as unassembled kits. Each kit consists of a flat base, a housing cover and 8, 16, 24, 32, 48 or 64 terminals. Double level terminals keep the enclosure size to a minimum, and yet, due to the innovative housing design, relatively large components can be mounted inside.

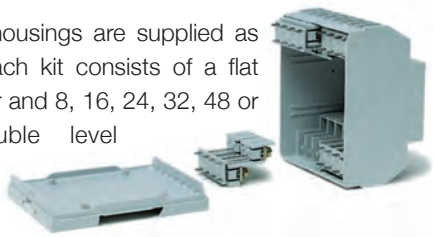

The terminals are machine solderable and have straight or right angle pins, depending on enclosure type (Type C has straight pins, Type B has right angle pins). We can also supply enclosures with fewer than the maximum number of terminals, please contact us with your requirements.

The KU4000 series are available in five widths, and are supplied with terminals in three standard positions:

- Terminals on top and bottom
- Terminals on one side only
- Terminals at both ends, the center area has no terminals.

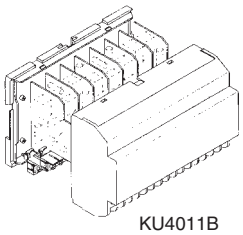

KU4011B

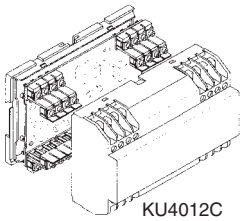

KU4012C

Cover plugs are available as accessories and can be plugged into unused screw holes and wire entries. Plugs are offered as sets, consisting of one screw-hole cover and one wire entry cover ***(Refer to Accessories in the Ordering Pages)***.

Integral printed circuit board guides are molded into the housing cover to save time when inserting boards. They also prevent misconnections and keep the boards from moving.

Printed circuit boards can be mounted in three ways:

- Horizontally, parallel with the base
- Vertically, perpendicular to the base
- Vertically, parallel with the DIN rail

One large board can be mounted against the base of the enclosure (parallel with the base) using terminals with straight solder pins. Boards can also be mounted vertically (perpendicular to the base) by using terminals with right angle solder pins, or vertically (parallel with the DIN rail) by using a wire jumper connection.
***(Refer to the Ordering Pages)***.

EK Series Industrial Enclosure

The face of the cover is 45mm (1.77 in.) high, and can be mounted into standard DIN distribution systems which have 45mm cutouts like Altechs EK and AK series of industrial enclosures. Mount the KU4000 enclosures together with circuit breakers and other DIN rail mount devices which also meet the 45mm standard. Removal of the housing cover is possible for service and repair after disconnecting the wires. KU4000 covers cannot be potted without taking special steps.

## TERMINALS

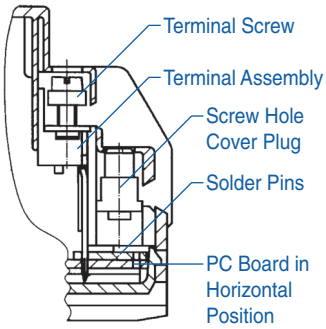


Pressure plate terminals are standard for the KU4000 enclosure and ensure a vibration proof connection. The pressure plate, which is captive to the terminal screw, automatically rises when the screw is loosened. One or two wires of equal or different sizes up to 2.5mm² (14 AWG) can be terminated in each terminal. The grooved corners of the pressure plate ensure positive retention of the wires. The flat bottom of the terminal extends to the inside of the enclosure and provides the terminal-to-board connection. The terminal screws can be turned by a flat tip or a #2 Pozidriv screwdriver.

The KU4000 series is also available with spring cage terminals. The terminal is opened by appling pressure with a screwdriver to open the clamp. Once the wire is inserted, the screwdriver is removed, creating a vibration proof connection to the wire.

## TERMINAL-TO-BOARD CONNECTIONS

The KU4000 series offers several fixed terminal-to-board connection possibilities. (Refer to the Ordering Pages for connection types.)

***Wire Jumper*** connections can be made by soldering a wire jumper between the center hole of the right angle solder pins and the printed circuit board(s). Upon soldering, the board is installed into the enclosure complete with terminals and other components.

All KU4000 terminals have ***Machine Solderable Pins***, which can be machine soldered to the board(s) in the same step as the other components, saving assembly time.

## MOUNTING

The KU4000 enclosures snap onto standard 35mm DIN rail or can be panel mounted. Mount one or several enclosures together, or mix them with other DIN rail mounted devices such as terminal blocks, circuit breakers, etc. The choice is yours.

## MARKING

The KU4000 series have large marking areas on the front of the cover.

## ACCESSORIES

- Cover Plugs for Screw Hole and Wire Entries
- Screws for Mounting Printed Circuit Board
- Pull-Out Panel Mounting Tabs
- 35mm DIN Rail

## CUSTOMIZATION

We can supply the KU4000, series enclosure kits with the exact number of terminals to meet your requirements. Enclosures can also be customized with cutouts and holes. Custom colors and special markings are also available.

# Enclosure Mounting Procedures

## DIN Rail Mounting

The top of the enclosure base has notches molded onto the sides. The bottom of the base has one spring-loaded tab that is factory installed into a molded guide for DIN rail mounting.

When mounting, tilt the bottom of the enclosure slightly away from the rail until the notches grab onto the top flange of the DIN rail. Push the bottom of the enclosure forward towards the DIN rail. The spring-loaded tab will snap onto the bottom of the rail and hold the enclosure firmly in place.

To remove the enclosure from the DIN rail, insert a screwdriver into the exposed slot in the tab and pull the tab down. Pull enclosure forward and remove from the rail.

## Panel Mounting

To mount enclosures on a panel or any flat surface, at least one tab must be in place on the top and on the bottom of the enclosure base in the panel mount position. Standard enclosures are supplied with one tab on the bottom for DIN rail mounting.

Install one or more additional tabs ***(see Accessories in the Ordering Pages)*** into molded tab guides on the back of the enclosure base. Move the pre-installed bottom tab from the DIN rail position to the panel mount position.

To move the tab, insert a screwdriver under the spring pin, lift it and pull the tab forward until it extends approximately 6mm(.25 in.) from the enclosure. Release pin and lock the tab in the panel mount position.

We can supply the enclosures already set up for panel mounting if desired. ***(Please specify when ordering)***.

## 8 Terminal

### Vertical PCB
### Screw Clamp

### TECHNICAL INFORMATION

**Electrical:**
16A, 300V, 22-14 AWG
**Housing Material:**
Glass-filled Polycarbonate
**Temperature Range:**
Up to 125°C (257°F)
**Flammability Rating:**
UL94 V-O
**Color:**
Light Gray

**Terminal Type:**
Screw / Pressure Plate
**Terminal Screw Size:**
M3.5
**Recommended Torque:**
0.8Nm
**Max. PCB's:**
(1) Vertical
**Mounting:**
35mm DIN Rail or optional panel mounting*

### ORDERING INFORMATION

| Part Number | Type | Description | PCB Connection |
|---|---|---|---|
| 91.201 | KU4001B | Right Angle Pins | Machine Solder/ Wire Jumper |

### ACCESSORIES

| Accessories | Part Number | Type |
|---|---|---|
| 1 Meter DIN Rail | 2511120/1M | TS35x7.5/1M |
| Screw-hole and Wire-Entry Cover Plug Set | 91.201.1 | SHPC |
| *Panel Mount Tab | 93.001.5 | PMA/KU |

### ENCLOSURE DRAWING (To convert to inches divide by 25.4.)

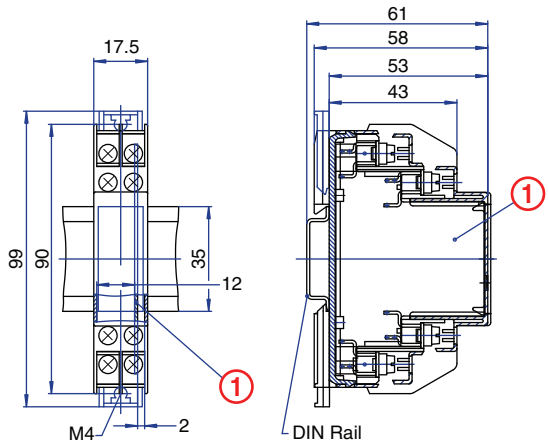


### PCB DRAWING (To convert to inches divide by 25.4.)

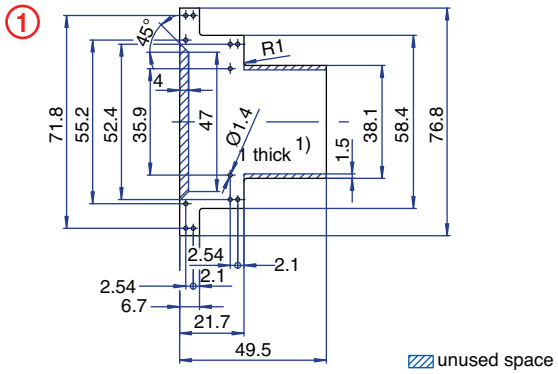


## 8 Terminal

### Horizontal PCB
### Screw Clamp

### TECHNICAL INFORMATION

**Electrical:**
16A, 300V, 22-14 AWG
**Housing Material:**
Glass-filled Polycarbonate
**Temperature Range:**
Up to 125°C (257°F)
**Flammability Rating:**
UL94 V-O
**Color:**
Light Gray

**Terminal Type:**
Screw / Pressure Plate
**Terminal Screw Size:**
M3.5
**Recommended Torque:**
0.8Nm
**Max. PCB's:**
(1) Horizontal
**Mounting:**
35mm DIN Rail or optional panel mounting*

### ORDERING INFORMATION

| Part Number | Type | Description | PCB Connection |
|---|---|---|---|
| 91.202 | KU4001C | Straight Pins | Machine Solder |

### ACCESSORIES

| Accessories | Part Number | Type |
|---|---|---|
| 1 Meter DIN Rail | 2511120/1M | TS35x7.5/1M |
| Screw-hole and Wire-Entry Cover Plug Set | 91.201.1 | SHPC |
| *Panel Mount Tab | 93.001.5 | PMA/KU |

### ENCLOSURE DRAWING (To convert to inches divide by 25.4.)

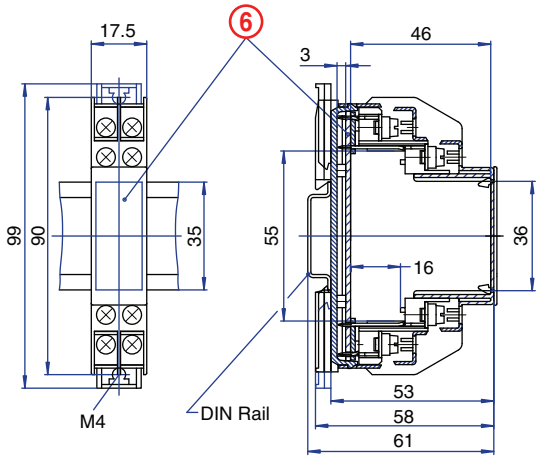


### PCB DRAWING (To convert to inches divide by 25.4.)

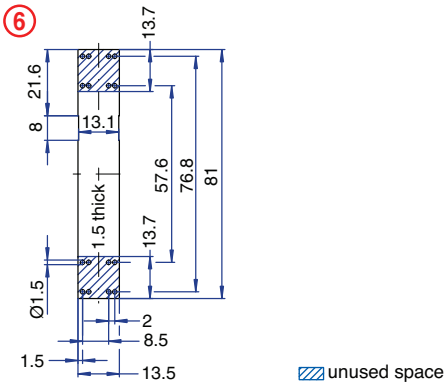

## 8 Terminal

### Vertical PCB Spring Clamp

### TECHNICAL INFORMATION

**Electrical:**
10A, 300V, 26-14 AWG

**Housing Material:**
Glass-filled Polycarbonate

**Temperature Range:**
Up to 125°C (257°F)

**Flammability Rating:**
UL94 V-O

**Color:**
Light Gray

**Terminal Type:**
Spring Cage Clamp

**Terminal Screw Size:**
–

**Recommended Torque:**
–

**Max. PCB's:**
(1) Vertical

**Mounting:**
35mm DIN Rail or optional panel mounting*

### ORDERING INFORMATION

| Part Number | Type | Description | PCB Connection |
|---|---|---|---|
| 91.501 | KU4037B | Right Angle Pins | Machine Solder/ Wire Jumper |

### ACCESSORIES

| Accessories | Part Number | Type |
|---|---|---|
| 1 Meter DIN Rail | 2511120/1M | TS35x7.5/1M |
| *Panel Mount Tab | 93.001.5 | PMA/KU |

### ENCLOSURE DRAWING (To convert to inches divide by 25.4.)

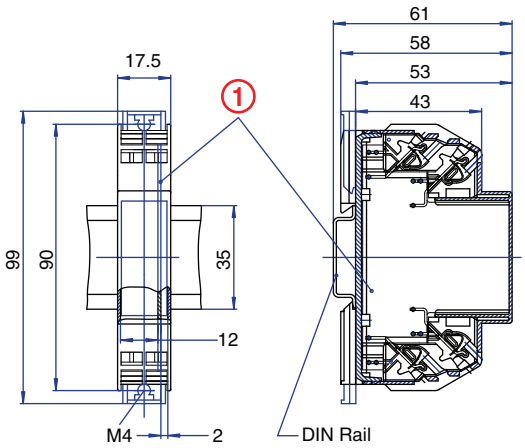


### PCB DRAWING (To convert to inches divide by 25.4.)

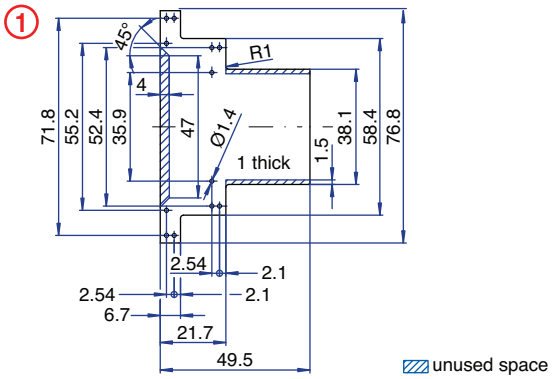


## 8 Terminal

### Horizontal PCB Spring Clamp

### TECHNICAL INFORMATION

**Electrical:**
10A, 300V, 26-14 AWG

**Housing Material:**
Glass-filled Polycarbonate

**Temperature Range:**
Up to 125°C (257°F)

**Flammability Rating:**
UL94 V-O

**Color:**
Light Gray

**Terminal Type:**
Spring Cage Clamp

**Terminal Screw Size:**
–

**Recommended Torque:**
–

**Max. PCB's:**
(1) Horizontal

**Mounting:**
35mm DIN Rail or optional panel mounting*

### ORDERING INFORMATION

| Part Number | Type | Description | PCB Connection |
|---|---|---|---|
| 91.502 | KU4037C | Straight Pins | Machine Solder |

### ACCESSORIES

| Accessories | Part Number | Type |
|---|---|---|
| 1 Meter DIN Rail | 2511120/1M | TS35x7.5/1M |
| *Panel Mount Tab | 93.001.5 | PMA/KU |

### ENCLOSURE DRAWING (To convert to inches divide by 25.4.)

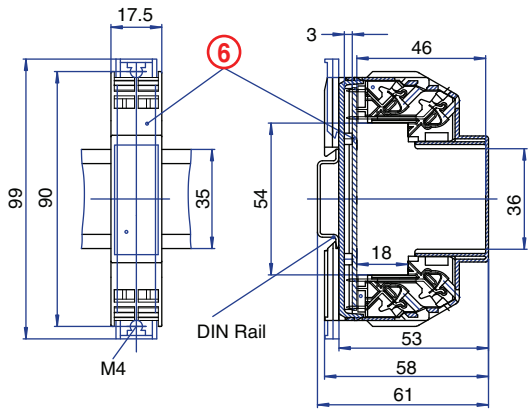


### PCB DRAWING (To convert to inches divide by 25.4.)

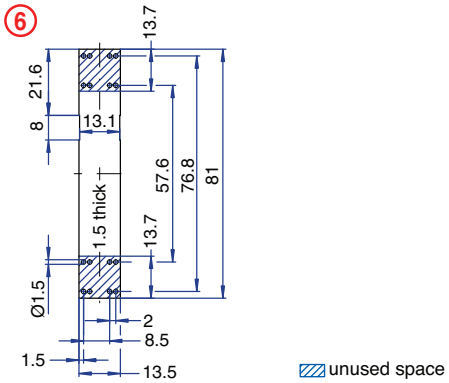

## 8 Terminal

### Tall Vertical PCB
### Screw Clamp

### TECHNICAL INFORMATION

**Electrical:**
16A, 300V, 22-14 AWG

**Housing Material:**
Glass-filled Polycarbonate

**Temperature Range:**
Up to 125°C (257°F)

**Flammability Rating:**
UL94 V-O

**Color:**
Light Gray

**Terminal Type:**
Screw / Pressure Plate

**Terminal Screw Size:**
M3.5

**Recommended Torque:**
0.8Nm

**Max. PCB's:**
(1) Vertical

**Mounting:**
35mm DIN Rail or optional panel mounting*

### ORDERING INFORMATION

| Part Number | Type | Description | PCB Connection |
|---|---|---|---|
| 91.203 | KU4001BT | Right Angle Pins | Machine Solder/ Wire Jumper |

### ACCESSORIES

| Accessories | Part Number | Type |
|---|---|---|
| 1 Meter DIN Rail | 2511120/1M | TS35x7.5/1M |
| Screw-hole and Wire-Entry Cover Plug Set | 91.201.1 | SHPC |
| *Panel Mount Tab | 93.001.5 | PMA/KU |

### ENCLOSURE DRAWING (To convert to inches divide by 25.4.)

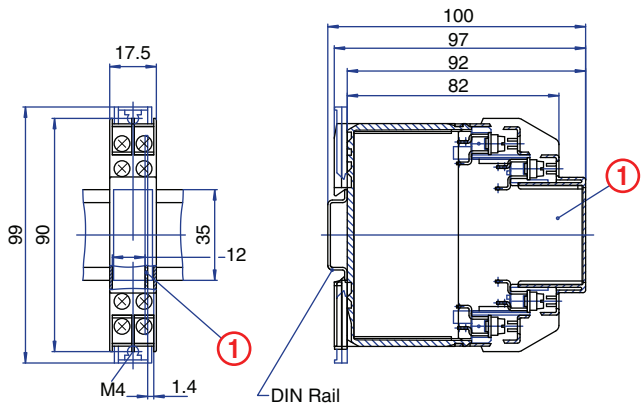


### PCB DRAWING (To convert to inches divide by 25.4.)

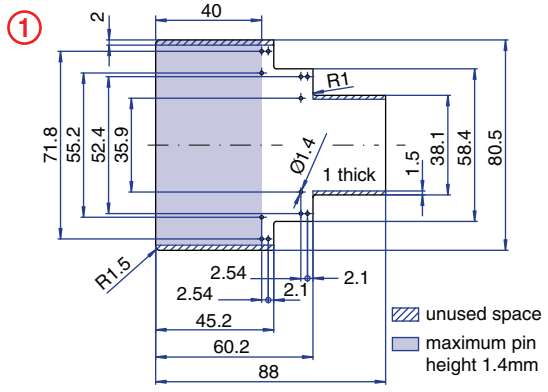


## 8 Terminal

### Tall Vertical PCB
### Spring Clamp

### TECHNICAL INFORMATION

**Electrical:**
10A, 300V, 26-14 AWG

**Housing Material:**
Glass-filled Polycarbonate

**Temperature Range:**
Up to 125°C (257°F)

**Flammability Rating:**
UL94 V-O

**Color:**
Light Gray

**Terminal Type:**
Spring Cage Clamp

**Terminal Screw Size:**
–

**Recommended Torque:**
–

**Max. PCB's:**
(1) Vertical

**Mounting:**
35mm DIN Rail or optional panel mounting*

### ORDERING INFORMATION

| Part Number | Type | Description | PCB Connection |
|---|---|---|---|
| 91.503 | KU4037BT | Right Angle Pins | Machine Solder/ Wire Jumper |

### ACCESSORIES

| Accessories | Part Number | Type |
|---|---|---|
| 1 Meter DIN Rail | 2511120/1M | TS35x7.5/1M |
| *Panel Mount Tab | 93.001.5 | PMA/KU |

### ENCLOSURE DRAWING (To convert to inches divide by 25.4.)

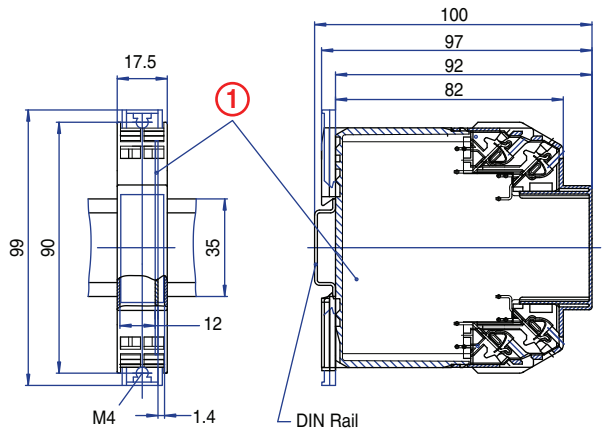


### PCB DRAWING (To convert to inches divide by 25.4.)

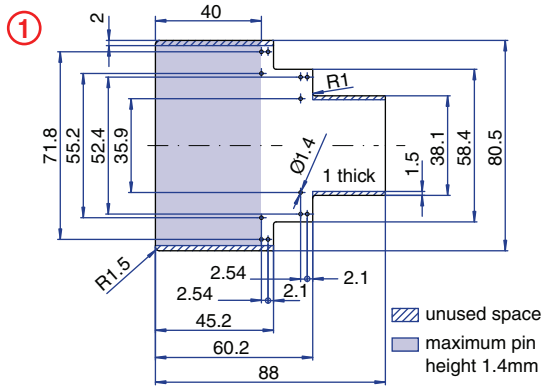

## 12 Terminal
### with 8 Standard and 4 High Current Terminals
### Vertical PCB
### Screw Clamp

### TECHNICAL INFORMATION

**Electrical:**
Standard Terminal:
16A, 300V, 22-14 AWG
High Current Terminal:
50A, 300V, 18-8 AWG

**Housing Material:**
Glass-filled Polycarbonate

**Temperature Range:**
Up to 125°C (257°F)

**Flammability Rating:**
UL94 V-O

**Color:**
Light Gray

**Terminal Type:**
Standard: Screw/Pressure Plate
High Current: Box Clamp

**Terminal Screw Size:**
M3.5 / M4

**Recommended Torque:**
0.8Nm/1.2Nm

**Max. PCB's:**
(1) Vertical

**Mounting:**
35mm DIN Rail or
optional panel mounting*

### ORDERING INFORMATION

| Part Number | Type | Description | PCB Connection |
|---|---|---|---|
| 91.710 | KU4088BHC | Right Angle Pins | Machine Solder/ Wire Jumper |

### ACCESSORIES

| Accessories | Part Number | Type |
|---|---|---|
| 1 Meter DIN Rail | 2511120/1M | TS35x7.5/1M |
| Screw-hole and Wire-Entry Cover Plug Set | 91.201.1 | SHPC |
| *Panel Mount Tab | 93.001.5 | PMA/KU |

### ENCLOSURE DRAWING (To convert to inches divide by 25.4.)

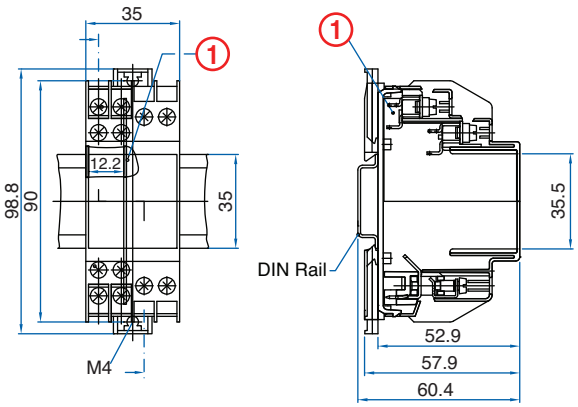


### PCB DRAWING (To convert to inches divide by 25.4.)

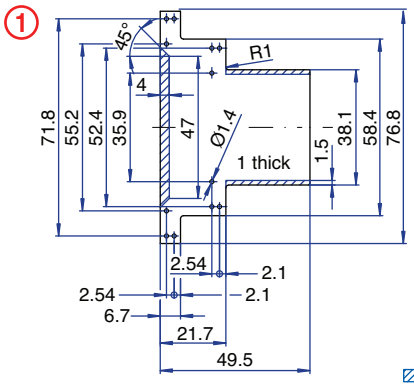


unused space

## 12 Terminal
### with 8 Standard and 4 High Current Terminals
### Horizontal PCB
### Screw Clamp

### TECHNICAL INFORMATION

**Electrical:**
Standard Terminal:
16A, 300V, 22-14 AWG
High Current Terminal:
50A, 300V, 18-8 AWG

**Housing Material:**
Glass-filled Polycarbonate

**Temperature Range:**
Up to 125°C (257°F)

**Flammability Rating:**
UL94 V-O

**Color:**
Light Gray

**Terminal Type:**
Standard: Screw/Pressure Plate
High Current: Box Clamp

**Terminal Screw Size:**
M3.5 / M4

**Recommended Torque:**
0.8Nm/1.2Nm

**Max. PCB's:**
(1) Horizontal

**Mounting:**
35mm DIN Rail or
optional panel mounting*

### ORDERING INFORMATION

| Part Number | Type | Description | PCB Connection |
|---|---|---|---|
| 91.720 | KU4088CHC | Straight Pins | Machine Solder Wire Jumper |

### ACCESSORIES

| Accessories | Part Number | Type |
|---|---|---|
| 1 Meter DIN Rail | 2511120/1M | TS35x7.5/1M |
| Screw-hole and Wire-Entry Cover Plug Set | 91.201.1 | SHPC |
| *Panel Mount Tab | 93.001.5 | PMA/KU |

### ENCLOSURE DRAWING (To convert to inches divide by 25.4.)

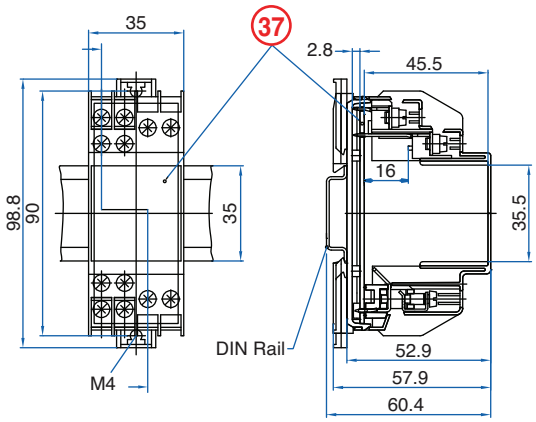


### PCB DRAWING (To convert to inches divide by 25.4.)

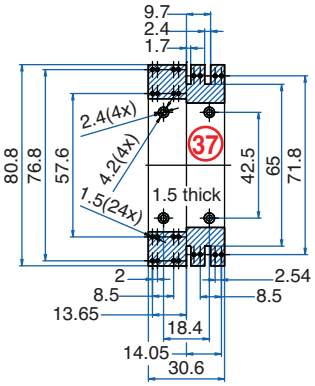


unused space

## 16 Terminal

### Vertical PCB
### Screw Clamp

### TECHNICAL INFORMATION

**Electrical:**
16A, 300V, 22-14 AWG
**Housing Material:**
Glass-filled Polycarbonate
**Temperature Range:**
Up to 125°C (257°F)
**Flammability Rating:**
UL94 V-O
**Color:**
Light Gray

**Terminal Type:**
Screw / Pressure Plate
**Terminal Screw Size:**
M3.5
**Recommended Torque:**
0.8Nm
**Max. PCB's:**
(2) Vertical
**Mounting:**
35mm DIN Rail or optional panel mounting*

### ORDERING INFORMATION

| Part Number | Type | Description | PCB Connection |
|---|---|---|---|
| 91.240 | KU4002B | Right Angle Pins | Machine Solder/ Wire Jumper |

### ACCESSORIES

| Accessories | Part Number | Type |
|---|---|---|
| 1 Meter DIN Rail | 2511120/1M | TS35x7.5/1M |
| Screw-hole and Wire-Entry Cover Plug Set | 91.201.1 | SHPC |
| *Panel Mount Tab | 93.001.5 | PMA/KU |

### ENCLOSURE DRAWING (To convert to inches divide by 25.4.)

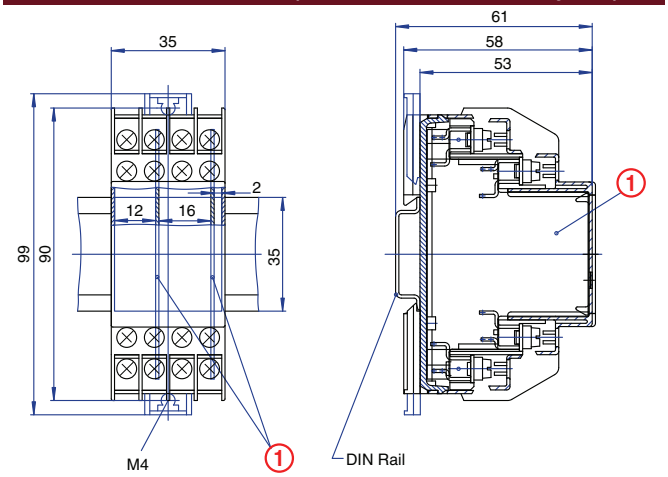


### PCB DRAWING (To convert to inches divide by 25.4.)

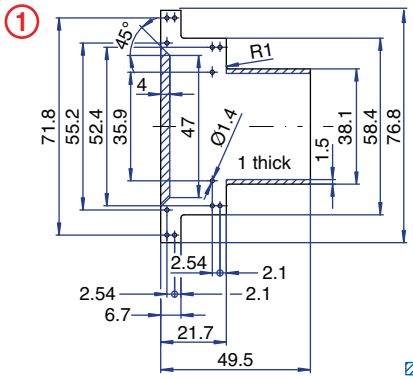


## 16 Terminal

### Horizontal PCB
### Screw Clamp

### TECHNICAL INFORMATION

**Electrical:**
16A, 300V, 22-14 AWG
**Housing Material:**
Glass-filled Polycarbonate
**Temperature Range:**
Up to 125°C (257°F)
**Flammability Rating:**
UL94 V-O
**Color:**
Light Gray

**Terminal Type:**
Screw / Pressure Plate
**Terminal Screw Size:**
M3.5
**Recommended Torque:**
0.8Nm
**Max. PCB's:**
(1) Horizontal
**Mounting:**
35mm DIN Rail or optional panel mounting*

### ORDERING INFORMATION

| Part Number | Type | Description | PCB Connection |
|---|---|---|---|
| 91.220 | KU4002C | Straight Pins | Machine Solder |

### ACCESSORIES

| Accessories | Part Number | Type |
|---|---|---|
| 1 Meter DIN Rail | 2511120/1M | TS35x7.5/1M |
| Screw-hole and Wire-Entry Cover Plug Set | 91.201.1 | SHPC |
| *Panel Mount Tab | 93.001.5 | PMA/KU |

### ENCLOSURE DRAWING (To convert to inches divide by 25.4.)

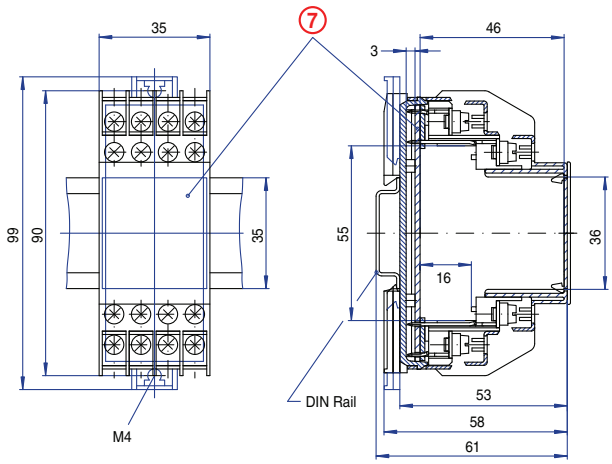


### PCB DRAWING (To convert to inches divide by 25.4.)

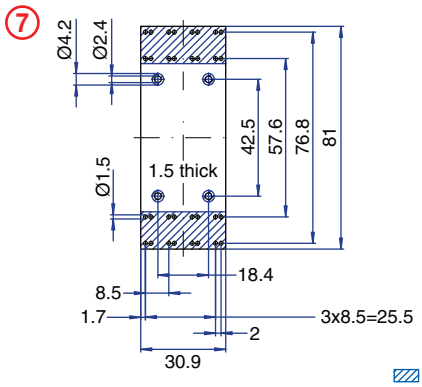

## 16 Terminal

### Vertical PCB
### Spring Clamp

### TECHNICAL INFORMATION

**Electrical:**
10A, 300V, 26-14 AWG

**Housing Material:**
Glass-filled Polycarbonate

**Temperature Range:**
Up to 125°C (257°F)

**Flammability Rating:**
UL94 V-O

**Color:**
Light Gray

**Terminal Type:**
Spring Cage Clamp

**Terminal Screw Size:**
–

**Recommended Torque:**
–

**Max. PCB's:**
(2) Vertical

**Mounting:**
35mm DIN Rail or optional panel mounting*

### ORDERING INFORMATION

| Part Number | Type | Description | PCB Connection |
|---|---|---|---|
| 91.540 | KU4038B | Right Angle Pins | Machine Solder/ Wire Jumper |

### ACCESSORIES

| Accessories | Part Number | Type |
|---|---|---|
| 1 Meter DIN Rail | 2511120/1M | TS35x7.5/1M |
| *Panel Mount Tab | 93.001.5 | PMA/KU |

### ENCLOSURE DRAWING (To convert to inches divide by 25.4.)

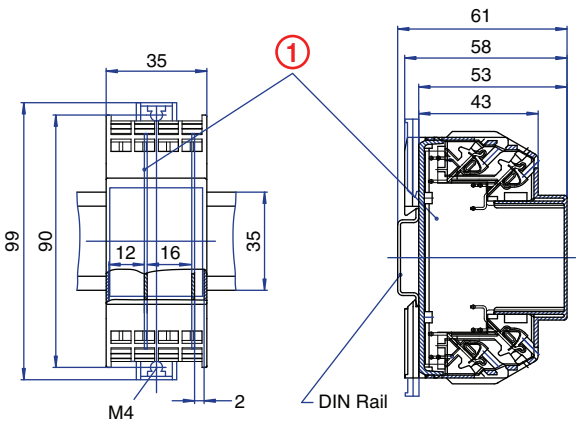


### PCB DRAWING (To convert to inches divide by 25.4.)

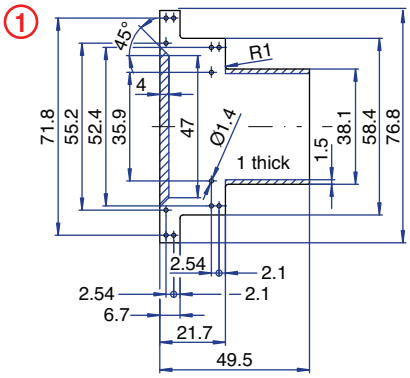


unused space

## 16 Terminal

### Horizontal PCB
### Spring Clamp

### TECHNICAL INFORMATION

**Electrical:**
10A, 300V, 26-14 AWG

**Housing Material:**
Glass-filled Polycarbonate

**Temperature Range:**
Up to 125°C (257°F)

**Flammability Rating:**
UL94 V-O

**Color:**
Light Gray

**Terminal Type:**
Spring Cage Clamp

**Terminal Screw Size:**
–

**Recommended Torque:**
–

**Max. PCB's:**
(1) Horizontal

**Mounting:**
35mm DIN Rail or optional panel mounting*

### ORDERING INFORMATION

| Part Number | Type | Description | PCB Connection |
|---|---|---|---|
| 91.520 | KU4038C | Straight Pins | Machine Solder |

### ACCESSORIES

| Accessories | Part Number | Type |
|---|---|---|
| 1 Meter DIN Rail | 2511120/1M | TS35x7.5/1M |
| *Panel Mount Tab | 93.001.5 | PMA/KU |

### ENCLOSURE DRAWING (To convert to inches divide by 25.4.)

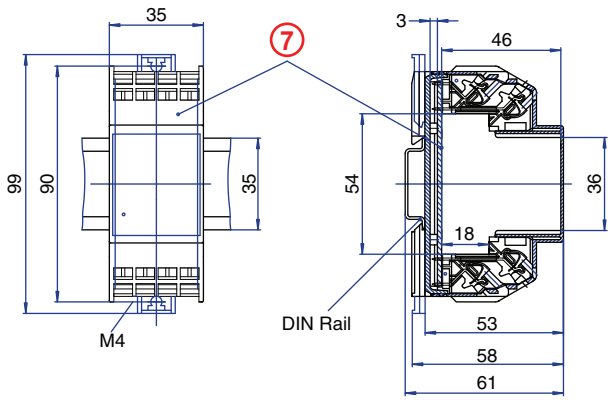


### PCB DRAWING (To convert to inches divide by 25.4.)

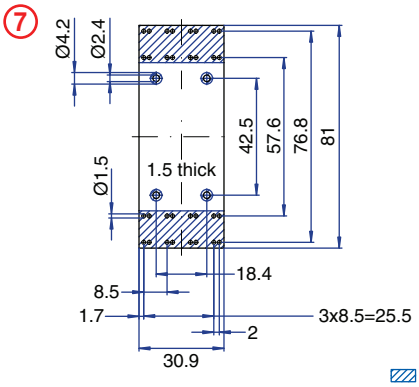


unused space

## 16 Terminal

### Tall Vertical PCB
### Screw Clamp

### TECHNICAL INFORMATION

**Electrical:**
16A, 300V, 22-14 AWG

**Housing Material:**
Glass-filled Polycarbonate

**Temperature Range:**
Up to 125°C (257°F)

**Flammability Rating:**
UL94 V-O

**Color:**
Light Gray

**Terminal Type:**
Screw / Pressure Plate

**Terminal Screw Size:**
M3.5

**Recommended Torque:**
0.8Nm

**Max. PCB's:**
(2) Vertical

**Mounting:**
35mm DIN Rail or optional panel mounting*

### ORDERING INFORMATION

| Part Number | Type | Description | PCB Connection |
|---|---|---|---|
| 91.243 | KU4002BT | Right Angle Pins | Machine Solder/ Wire Jumper |

### ACCESSORIES

| Accessories | Part Number | Type |
|---|---|---|
| 1 Meter DIN Rail | 2511120/1M | TS35x7.5/1M |
| Screw-hole and Wire-Entry Cover Plug Set | 91.201.1 | SHPC |
| *Panel Mount Tab | 93.001.5 | PMA/KU |

### ENCLOSURE DRAWING (To convert to inches divide by 25.4.)

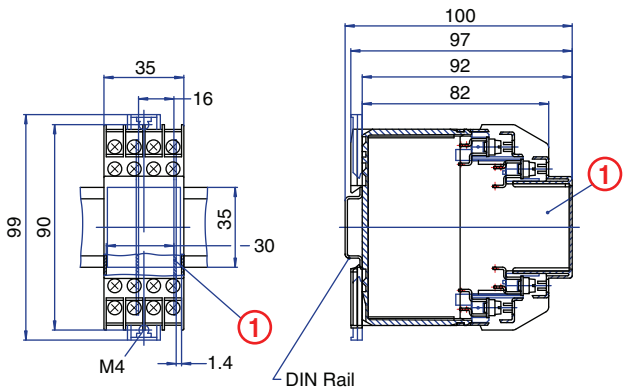


### PCB DRAWING (To convert to inches divide by 25.4.)

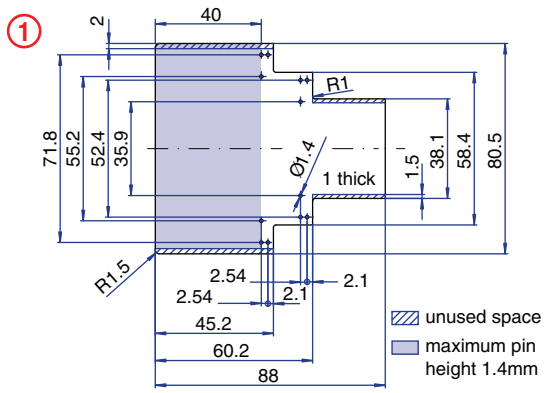


## 16 Terminal

### Tall Vertical PCB
### Spring Clamp

### TECHNICAL INFORMATION

**Electrical:**
10A, 300V, 26-14 AWG

**Housing Material:**
Glass-filled Polycarbonate

**Temperature Range:**
Up to 125°C (257°F)

**Flammability Rating:**
UL94 V-O

**Color:**
Light Gray

**Terminal Type:**
Spring Cage Clamp

**Terminal Screw Size:**
–

**Recommended Torque:**
–

**Max. PCB's:**
(2) Vertical

**Mounting:**
35mm DIN Rail or optional panel mounting*

### ORDERING INFORMATION

| Part Number | Type | Description | PCB Connection |
|---|---|---|---|
| 91.543 | KU4038BT | Right Angle Pins | Machine Solder/ Wire Jumper |

### ACCESSORIES

| Accessories | Part Number | Type |
|---|---|---|
| 1 Meter DIN Rail | 2511120/1M | TS35x7.5/1M |
| *Panel Mount Tab | 93.001.5 | PMA/KU |

### ENCLOSURE DRAWING (To convert to inches divide by 25.4.)

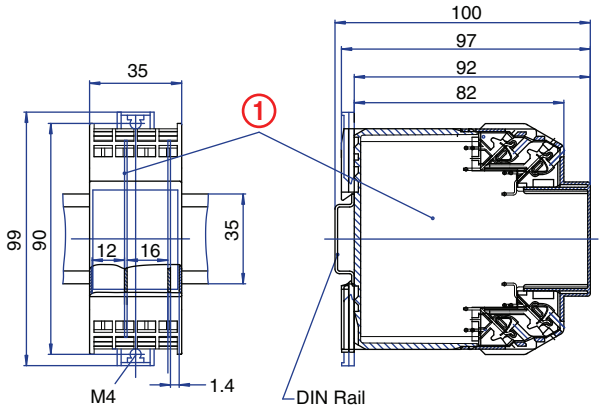


### PCB DRAWING (To convert to inches divide by 25.4.)

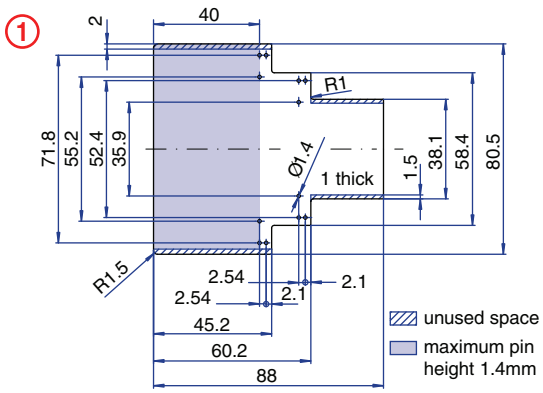

## 24 Terminal

### Vertical PCB
### Screw Clamp

### TECHNICAL INFORMATION

**Electrical:**
16A, 300V, 22-14 AWG
**Housing Material:**
Glass-filled Polycarbonate
**Temperature Range:**
Up to 125°C (257°F)
**Flammability Rating:**
UL94 V-O
**Color:**
Light Gray

**Terminal Type:**
Screw / Pressure Plate
**Terminal Screw Size:**
M3.5
**Recommended Torque:**
0.8Nm
**Max. PCB's:**
(3) Vertical
**Mounting:**
35mm DIN Rail or optional panel mounting*

### ORDERING INFORMATION

| Part Number | Type | Description | PCB Connection |
|---|---|---|---|
| 91.440 | KU4084B | Right Angle Pins | Machine Solder/ Wire Jumper |

### ACCESSORIES

| Accessories | Part Number | Type |
|---|---|---|
| 1 Meter DIN Rail | 2511120/1M | TS35x7.5/1M |
| Screw-hole and Wire-Entry Cover Plug Set | 91.201.1 | SHPC |
| *Panel Mount Tab | 93.001.5 | PMA/KU |

### ENCLOSURE DRAWING (To convert to inches divide by 25.4.)

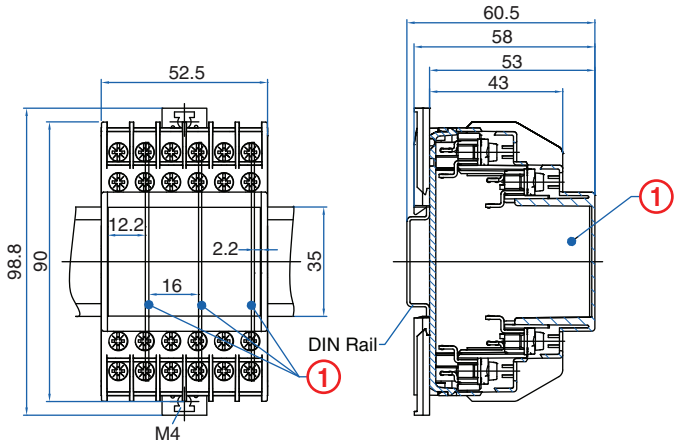


### PCB DRAWING (To convert to inches divide by 25.4.)

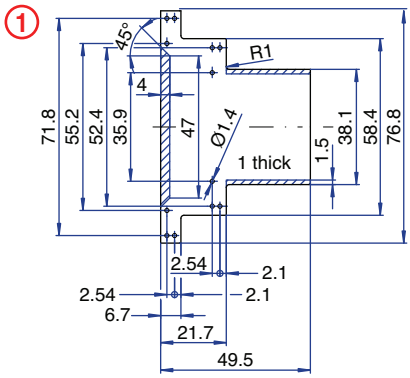


unused space

## 24 Terminal

### Horizontal PCB
### Screw Clamp

### TECHNICAL INFORMATION

**Electrical:**
16A, 300V, 22-14 AWG
**Housing Material:**
Glass-filled Polycarbonate
**Temperature Range:**
Up to 125°C (257°F)
**Flammability Rating:**
UL94 V-O
**Color:**
Light Gray

**Terminal Type:**
Screw / Pressure Plate
**Terminal Screw Size:**
M3.5
**Recommended Torque:**
0.8Nm
**Max. PCB's:**
(1) Horizontal
**Mounting:**
35mm DIN Rail or optional panel mounting*

### ORDERING INFORMATION

| Part Number | Type | Description | PCB Connection |
|---|---|---|---|
| 91.420 | KU4084C | Straight Pins | Machine Solder |

### ACCESSORIES

| Accessories | Part Number | Type |
|---|---|---|
| 1 Meter DIN Rail | 2511120/1M | TS35x7.5/1M |
| Screw-hole and Wire-Entry Cover Plug Set | 91.201.1 | SHPC |
| *Panel Mount Tab | 93.001.5 | PMA/KU |

### ENCLOSURE DRAWING (To convert to inches divide by 25.4.)

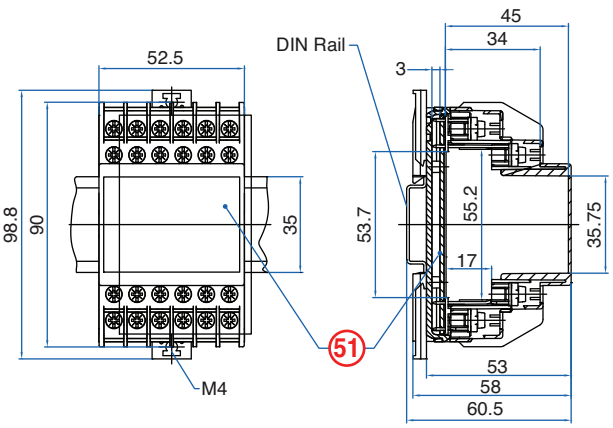


### PCB DRAWING (To convert to inches divide by 25.4.)

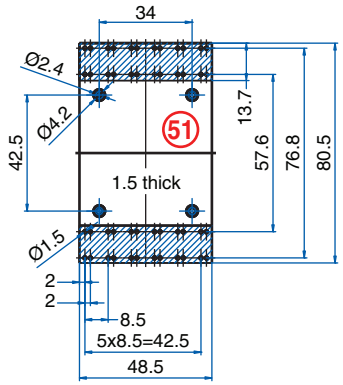


unused space

## 24 Terminal

### Tall Vertical
### PCB Screw Clamp

## TECHNICAL INFORMATION

**Electrical:**
16A, 300V, 22-14 AWG

**Housing Material:**
Glass-filled Polycarbonate

**Temperature Range:**
Up to 125°C (257°F)

**Flammability Rating:**
UL94 V-O

**Color:**
Light Gray

**Terminal Type:**
Screw / Pressure Plate

**Terminal Screw Size:**
M3.5

**Recommended Torque:**
0.8Nm

**Max. PCB's:**
(3) Vertical

**Mounting:**
35mm DIN Rail or
optional panel mounting*

## ORDERING INFORMATION

| Part Number | Type | Description | PCB Connection |
|---|---|---|---|
| 91.443 | KU4084BT | Right Angle Pins | Machine Solder/ Wire Jumper |

## ACCESSORIES

| Accessories | Part Number | Type |
|---|---|---|
| 1 Meter DIN Rail | 2511120/1M | TS35x7.5/1M |
| Screw-hole and Wire-Entry Cover Plug Set | 91.201.1 | SHPC |
| *Panel Mount Tab | 93.001.5 | PMA/KU |

## ENCLOSURE DRAWING (To convert to inches divide by 25.4.)

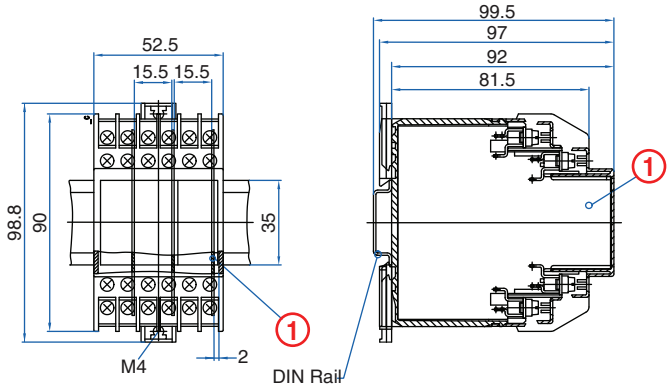


## PCB DRAWING (To convert to inches divide by 25.4.)

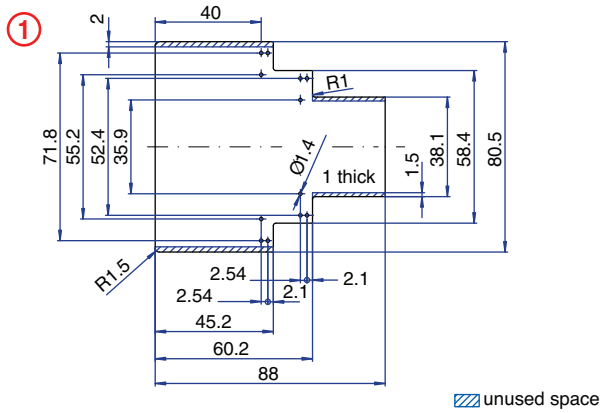

## 24 Terminal
### with 16 Standard and 8 High Current Terminals
### Vertical PCB
### Screw Clamp

### TECHNICAL INFORMATION

**Electrical:**
Standard Terminal:
16A, 300V, 22-14 AWG
High Current Terminal:
50A, 300V, 18-8 AWG

**Housing Material:**
Glass-filled Polycarbonate

**Temperature Range:**
Up to 125°C (257°F)

**Flammability Rating:**
UL94 V-O

**Color:** Light Gray

**Terminal Type:**
Standard: Screw/Pressure Plate
High Current: Box Clamp

**Terminal Screw Size:**
M3.5 / M4

**Recommended Torque:**
0.8Nm / 1.2Nm

**Max. PCB's:**
(2) Vertical

**Mounting:**
35mm DIN Rail or
optional panel mounting*

### ORDERING INFORMATION

| Part Number | Type | Description | PCB Connection |
|---|---|---|---|
| 91.730 | KU4089BHC | Right Angle Pins | Machine Solder/ Wire Jumper |

### ACCESSORIES

| Accessories | Part Number | Type |
|---|---|---|
| 1 Meter DIN Rail | 2511120/1M | TS35x7.5/1M |
| Screw-hole and Wire-Entry Cover Plug Set | 91.201.1 | SHPC |
| *Panel Mount Tab | 93.001.5 | PMA/KU |

### ENCLOSURE DRAWING (To convert to inches divide by 25.4.)

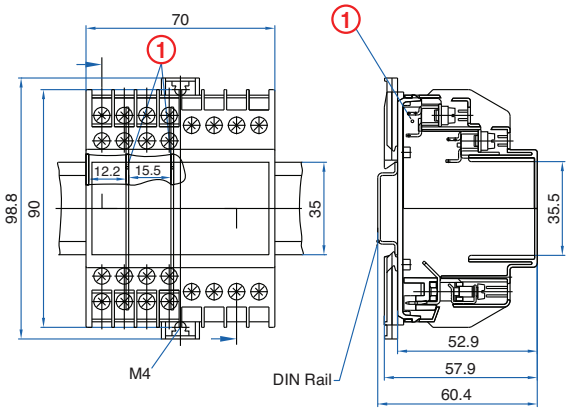


### PCB DRAWING (To convert to inches divide by 25.4.)

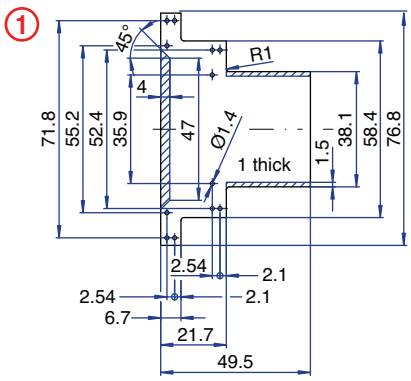


unused space

## 24 Terminal
### with 16 Standard and 8 High Current Terminals
### Horizontal PCB
### Screw Clamp

### TECHNICAL INFORMATION

**Electrical:**
Standard Terminal:
16A, 300V, 22-14 AWG
High Current Terminal:
50A, 300V, 18-8 AWG

**Housing Material:**
Glass-filled Polycarbonate

**Temperature Range:**
Up to 125°C (257°F)

**Flammability Rating:**
UL94 V-O

**Color:** Light Gray

**Terminal Type:**
Standard: Screw/Pressure Plate
High Current: Box Clamp

**Terminal Screw Size:**
M3.5 / M4

**Recommended Torque:**
0.8Nm/ 1.2Nm

**Max. PCB's:**
(1) Horizonal, (2) Vertical

**Mounting:**
35mm DIN Rail or
optional panel mounting*

### ORDERING INFORMATION

| Part Number | Type | Description | PCB Connection |
|---|---|---|---|
| 91.740 | KU4089CHC | Straight Pins | Machine Solder/ Wire Jumper |

### ACCESSORIES

| Accessories | Part Number | Type |
|---|---|---|
| 1 Meter DIN Rail | 2511120/1M | TS35x7.5/1M |
| Screw-hole and Wire-Entry Cover Plug Set | 91.201.1 | SHPC |
| *Panel Mount Tab | 93.001.5 | PMA/KU |

### ENCLOSURE DRAWING (To convert to inches divide by 25.4.)

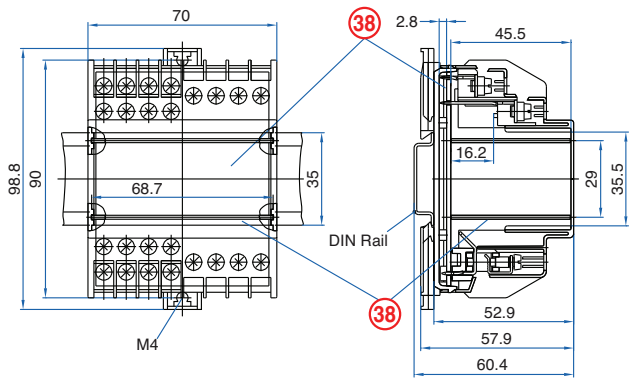


### PCB DRAWING (To convert to inches divide by 25.4.)

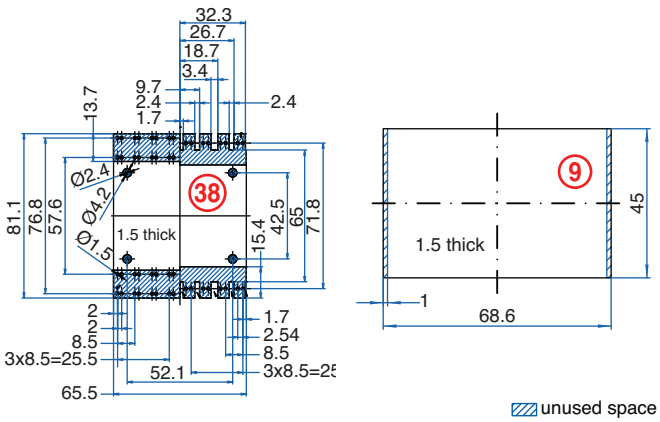


unused space

## 32 Terminal

### Vertical PCB
### Screw Clamp

### TECHNICAL INFORMATION

**Electrical:**
16A, 300V, 22-14 AWG

**Housing Material:**
Glass-filled Polycarbonate

**Temperature Range:**
Up to 125°C (257°F)

**Flammability Rating:**
UL94 V-O

**Color:**
Light Gray

**Terminal Type:**
Screw / Pressure Plate

**Terminal Screw Size:**
M3.5

**Recommended Torque:**
0.8Nm

**Max. PCB's:**
(4) Vertical

**Mounting:**
35mm DIN Rail or optional panel mounting*

### ORDERING INFORMATION

| Part Number | Type | Description | PCB Connection |
|---|---|---|---|
| 91.280 | KU4003B | Right Angle Pins | Machine Solder/ Wire Jumper |

### ACCESSORIES

| Accessories | Part Number | Type |
|---|---|---|
| 1 Meter DIN Rail | 2511120/1M | TS35x7.5/1M |
| Screw-hole and Wire-Entry Cover Plug Set | 91.201.1 | SHPC |
| *Panel Mount Tab | 93.001.5 | PMA/KU |

### ENCLOSURE DRAWING (To convert to inches divide by 25.4.)

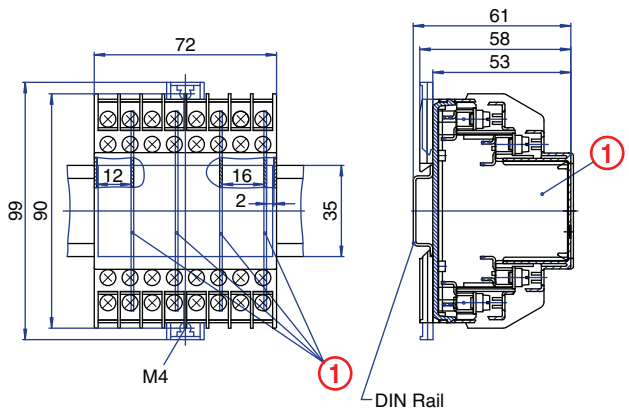


### PCB DRAWING (To convert to inches divide by 25.4.)

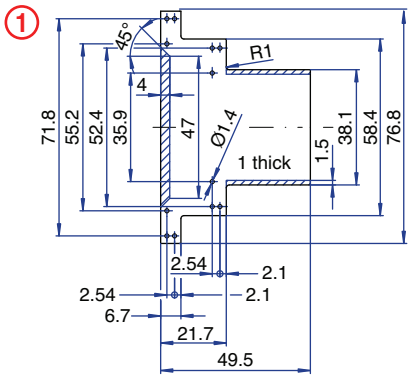


unused space

## 32 Terminal

### Horizontal PCB
### Screw Clamp

### TECHNICAL INFORMATION

**Electrical:**
16A, 300V, 22-14 AWG

**Housing Material:**
Glass-filled Polycarbonate

**Temperature Range:**
Up to 125°C (257°F)

**Flammability Rating:**
UL94 V-O

**Color:**
Light Gray

**Terminal Type:**
Screw / Pressure Plate

**Terminal Screw Size:**
M3.5

**Recommended Torque:**
0.8Nm

**Max. PCB's:**
(1) Horizontal, (2) Vertical

**Mounting:**
35mm DIN Rail or optional panel mounting*

### ORDERING INFORMATION

| Part Number | Type | Description | PCB Connection |
|---|---|---|---|
| 91.260 | KU4003C | Straight Pins | Machine Solder |

### ACCESSORIES

| Accessories | Part Number | Type |
|---|---|---|
| 1 Meter DIN Rail | 2511120/1M | TS35x7.5/1M |
| Screw-hole and Wire-Entry Cover Plug Set | 91.201.1 | SHPC |
| *Panel Mount Tab | 93.001.5 | PMA/KU |

### ENCLOSURE DRAWING (To convert to inches divide by 25.4.)

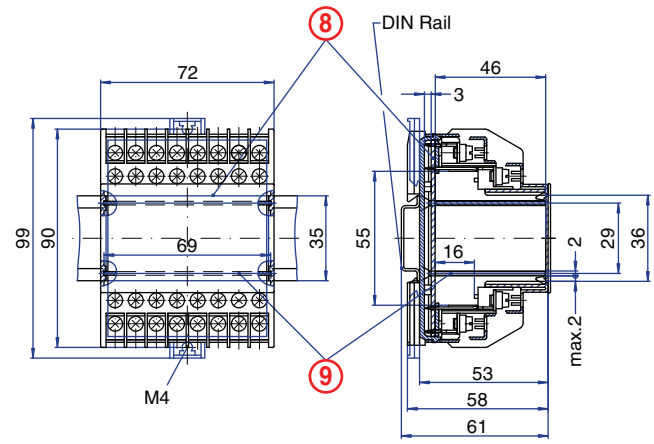


### PCB DRAWING (To convert to inches divide by 25.4.)

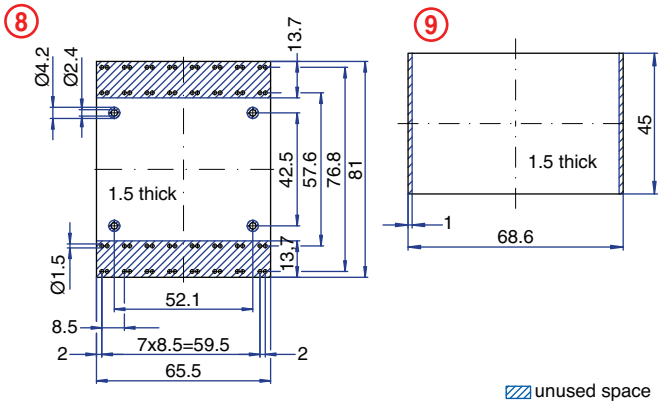


unused space

## 32 Terminal

### Vertical PCB
### Spring Clamp

### TECHNICAL INFORMATION

**Electrical:**
10A, 300V, 26-14 AWG

**Housing Material:**
Glass-filled Polycarbonate

**Temperature Range:**
Up to 125°C (257°F)

**Flammability Rating:**
UL94 V-O

**Color:**
Light Gray

**Terminal Type:**
Spring Cage Clamp

**Terminal Screw Size:**
–

**Recommended Torque:**
–

**Max. PCB's:**
(4) Vertical

**Mounting:**
35mm DIN Rail or optional panel mounting*

### ORDERING INFORMATION

| Part Number | Type | Description | PCB Connection |
|---|---|---|---|
| 91.580 | KU4039B | Right Angle Pins | Machine Solder/ Wire Jumper |

### ACCESSORIES

| Accessories | Part Number | Type |
|---|---|---|
| 1 Meter DIN Rail | 2511120/1M | TS35x7.5/1M |
| *Panel Mount Tab | 93.001.5 | PMA/KU |

### ENCLOSURE DRAWING (To convert to inches divide by 25.4.)

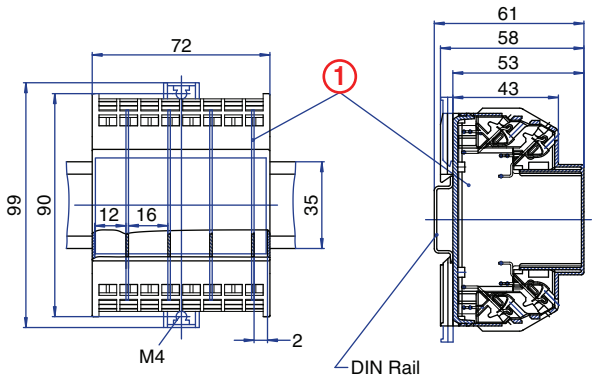


### PCB DRAWING (To convert to inches divide by 25.4.)

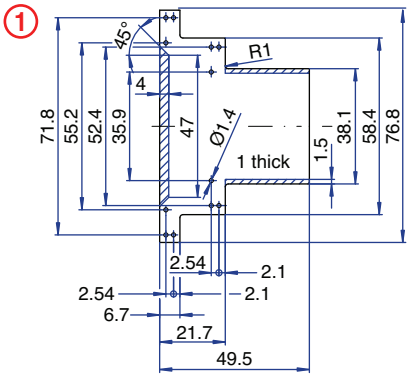


unused space

## 32 Terminal

### Horizontal PCB
### Spring Clamp

### TECHNICAL INFORMATION

**Electrical:**
10A, 300V, 26-14 AWG

**Housing Material:**
Glass-filled Polycarbonate

**Temperature Range:**
Up to 125°C (257°F)

**Flammability Rating:**
UL94 V-O

**Color:**
Light Gray

**Terminal Type:**
Spring Cage Clamp

**Terminal Screw Size:**
–

**Recommended Torque:**
–

**Max. PCB's:**
(1) Horizontal

**Mounting:**
35mm DIN Rail or optional panel mounting*

### ORDERING INFORMATION

| Part Number | Type | Description | PCB Connection |
|---|---|---|---|
| 91.560 | KU4039C | Straight Pins | Machine Solder |

### ACCESSORIES

| Accessories | Part Number | Type |
|---|---|---|
| 1 Meter DIN Rail | 2511120/1M | TS35x7.5/1M |
| *Panel Mount Tab | 93.001.5 | PMA/KU |

### ENCLOSURE DRAWING (To convert to inches divide by 25.4.)

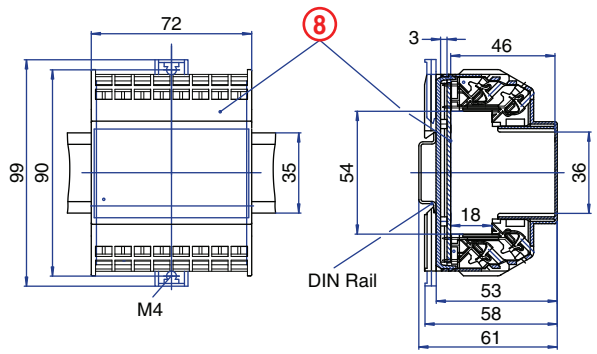


### PCB DRAWING (To convert to inches divide by 25.4.)

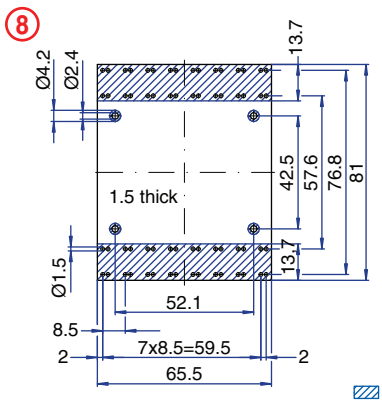


unused space

## 32 Terminal

### Tall Vertical
### PCB Screw Clamp

### TECHNICAL INFORMATION

**Electrical:**
16A, 300V, 22-14 AWG

**Housing Material:**
Glass-filled Polycarbonate

**Temperature Range:**
Up to 125°C (257°F)

**Flammability Rating:**
UL94 V-O

**Color:**
Light Gray

**Terminal Type:**
Screw / Pressure Plate

**Terminal Screw Size:**
M3.5

**Recommended Torque:**
0.8Nm

**Max. PCB's:**
(4) Vertical

**Mounting:**
35mm DIN Rail or optional panel mounting*

### ORDERING INFORMATION

| Part Number | Type | Description | PCB Connection |
|---|---|---|---|
| 91.283 | KU4003BT | Right Angle Pins | Machine Solder/ Wire Jumper |

### ACCESSORIES

| Accessories | Part Number | Type |
|---|---|---|
| 1 Meter DIN Rail | 2511120/1M | TS35x7.5/1M |
| Screw-hole and Wire-Entry Cover Plug Set | 91.201.1 | SHPC |
| *Panel Mount Tab | 93.001.5 | PMA/KU |

### ENCLOSURE DRAWING (To convert to inches divide by 25.4.)

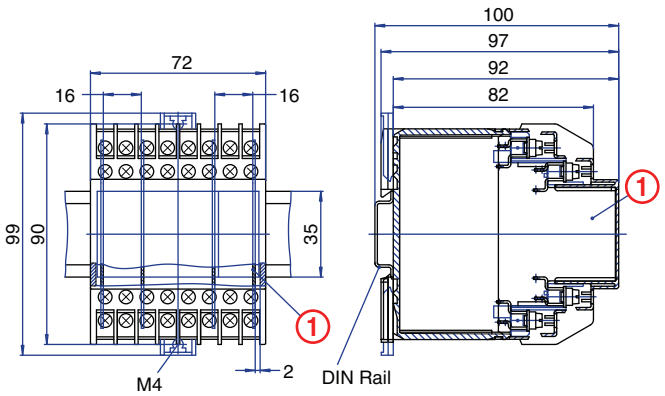


### PCB DRAWING (To convert to inches divide by 25.4.)

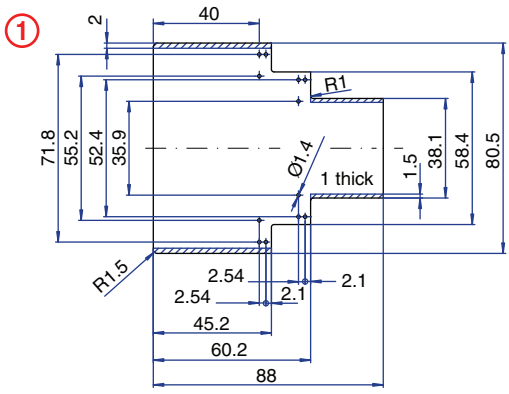


unused space

## 32 Terminal

### Tall Vertical
### PCB Spring Clamp

### TECHNICAL INFORMATION

**Electrical:**
10A, 300V, 26-14 AWG

**Housing Material:**
Glass-filled Polycarbonate

**Temperature Range:**
Up to 125°C (257°F)

**Flammability Rating:**
UL94 V-O

**Color:**
Light Gray

**Terminal Type:**
Spring Cage Clamp

**Terminal Screw Size:**
–

**Recommended Torque:**
–

**Max. PCB's:**
(4) Vertical

**Mounting:**
35mm DIN Rail or optional panel mounting*

### ORDERING INFORMATION

| Part Number | Type | Description | PCB Connection |
|---|---|---|---|
| 91.583 | KU4039BT | Right Angle Pins | Machine Solder/ Wire Jumper |

### ACCESSORIES

| Accessories | Part Number | Type |
|---|---|---|
| 1 Meter DIN Rail | 2511120/1M | TS35x7.5/1M |
| *Panel Mount Tab | 93.001.5 | PMA/KU |

### ENCLOSURE DRAWING (To convert to inches divide by 25.4.)

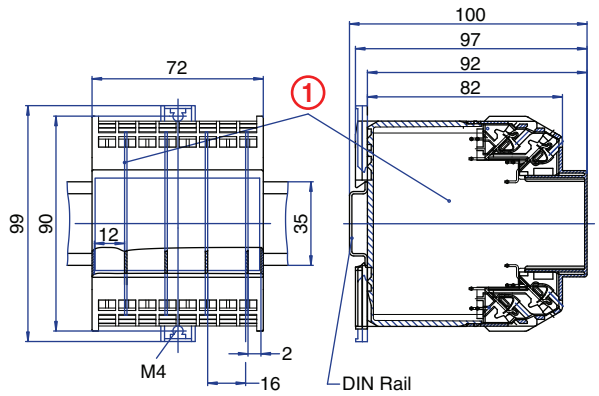


### PCB DRAWING (To convert to inches divide by 25.4.)

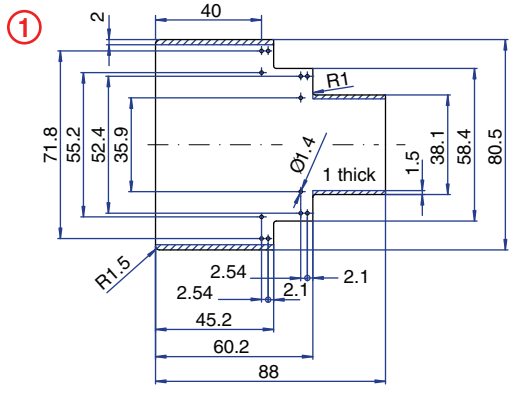


unused space

## 16 Terminal

### Vertical PCB Screw Clamp

### TECHNICAL INFORMATION

**Electrical:**
16A, 300V, 22-14 AWG

**Housing Material:**
Glass-filled Polycarbonate

**Temperature Range:**
Up to 125°C (257°F)

**Flammability Rating:**
UL94 V-O

**Color:**
Light Gray

**Terminal Type:**
Screw / Pressure Plate

**Terminal Screw Size:**
M3.5

**Recommended Torque:**
0.8Nm

**Max. PCB's:**
(2) Vertical

**Mounting:**
35mm DIN Rail or optional panel mounting*

### ORDERING INFORMATION

| Part Number | Type | Description | PCB Connection |
|---|---|---|---|
| 91.250 | KU4090B16 | Right Angle Pins | Machine Solder/ Wire Jumper |

### ACCESSORIES

| Accessories | Part Number | Type |
|---|---|---|
| 1 Meter DIN Rail | 2511120/1M | TS35x7.5/1M |
| Screw-hole and Wire-Entry Cover Plug Set | 91.201.1 | SHPC |
| *Panel Mount Tab | 93.001.5 | PMA/KU |

### ENCLOSURE DRAWING (To convert to inches divide by 25.4.)

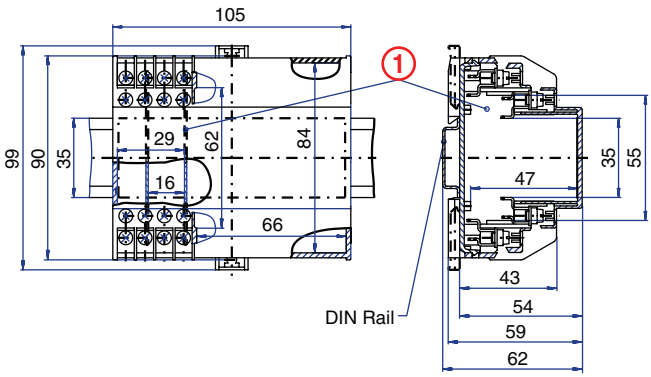


### PCB DRAWING (To convert to inches divide by 25.4.)

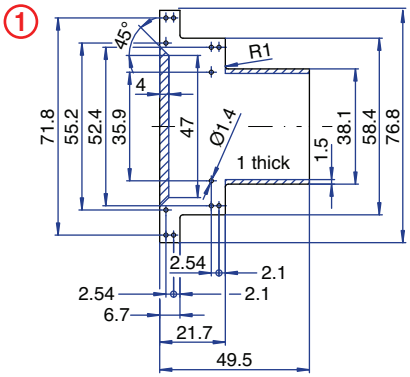


unused space

## 16 Terminal

### Horizontal PCB Screw Clamp

### TECHNICAL INFORMATION

**Electrical:**
16A, 300V, 22-14 AWG

**Housing Material:**
Glass-filled Polycarbonate

**Temperature Range:**
Up to 125°C (257°F)

**Flammability Rating:**
UL94 V-O

**Color:**
Light Gray

**Terminal Type:**
Screw / Pressure Plate

**Terminal Screw Size:**
M3.5

**Recommended Torque:**
0.8Nm

**Max. PCB's:**
(1) Horizontal, (2) Vertical

**Mounting:**
35mm DIN Rail or optional panel mounting*

### ORDERING INFORMATION

| Part Number | Type | Description | PCB Connection |
|---|---|---|---|
| 91.230 | KU4090C16 | Straight Pins | Machine Solder |

### ACCESSORIES

| Accessories | Part Number | Type |
|---|---|---|
| 1 Meter DIN Rail | 2511120/1M | TS35x7.5/1M |
| Screw-hole and Wire-Entry Cover Plug Set | 91.201.1 | SHPC |
| *Panel Mount Tab | 93.001.5 | PMA/KU |

### ENCLOSURE DRAWING (To convert to inches divide by 25.4.)

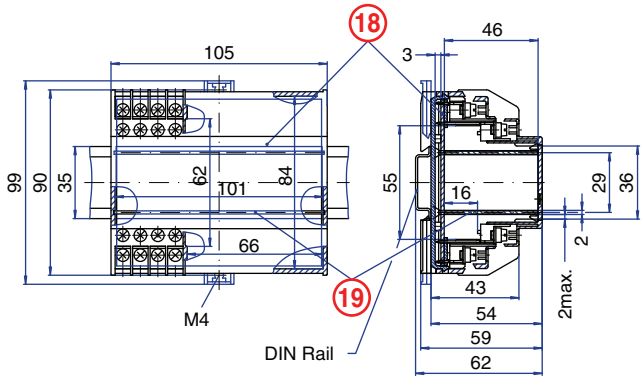


### PCB DRAWING (To convert to inches divide by 25.4.)

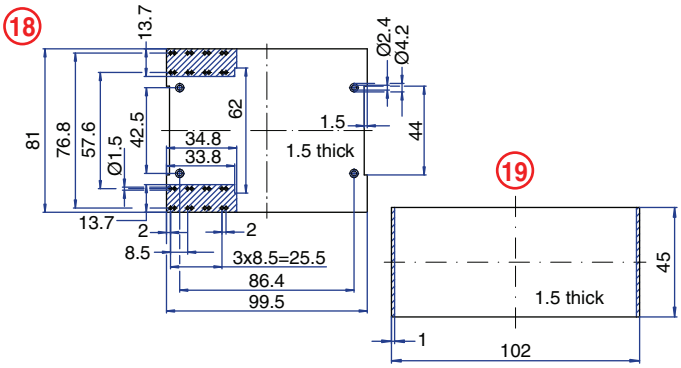


unused space

## 16 Terminal

**Vertical PCB**
**Screw Clamp**
**with vent slots**

### TECHNICAL INFORMATION

**Electrical:**
16A, 300V, 22-14 AWG
**Housing Material:**
Glass-filled Polycarbonate
**Temperature Range:**
Up to 125°C (257°F)
**Flammability Rating:**
UL94 V-O
**Color:**
Light Gray

**Terminal Type:**
Screw / Pressure Plate
**Terminal Screw Size:**
M3.5
**Recommended Torque:**
0.8Nm
**Max. PCB's:**
(3) Vertical
**Mounting:**
35mm DIN Rail or optional panel mounting*

### ORDERING INFORMATION

| Part Number | Type | Description | PCB Connection |
|---|---|---|---|
| 91.255 | KU4090B16V | Right Angle Pins | Machine Solder/ Wire Jumper |

### ACCESSORIES

| Accessories | Part Number | Type |
|---|---|---|
| 1 Meter DIN Rail | 2511120/1M | TS35x7.5/1M |
| Screw-hole and Wire-Entry Cover Plug Set | 91.201.1 | SHPC |
| *Panel Mount Tab | 93.001.5 | PMA/KU |

### ENCLOSURE DRAWING (To convert to inches divide by 25.4.)

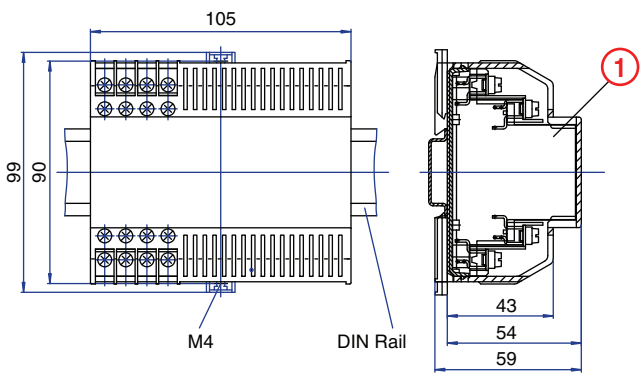


### PCB DRAWING (To convert to inches divide by 25.4.)

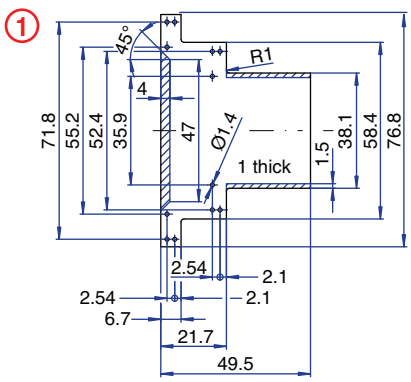


unused space

## 16 Terminal

**Horizontal PCB**
**Screw Clamp**
**with vent slots**

### TECHNICAL INFORMATION

**Electrical:**
16A, 300V, 22-14 AWG
**Housing Material:**
Glass-filled Polycarbonate
**Temperature Range:**
Up to 125°C (257°F)
**Flammability Rating:**
UL94 V-O
**Color:**
Light Gray

**Terminal Type:**
Screw / Pressure Plate
**Terminal Screw Size:**
M3.5
**Recommended Torque:**
0.8Nm
**Max. PCB's:**
(1) Horizontal, (2) Vertical
**Mounting:**
35mm DIN Rail or optional panel mounting*

### ORDERING INFORMATION

| Part Number | Type | Description | PCB Connection |
|---|---|---|---|
| 91.235 | KU4090C16V | Straight Pins | Machine Solder |

### ACCESSORIES

| Accessories | Part Number | Type |
|---|---|---|
| 1 Meter DIN Rail | 2511120/1M | TS35x7.5/1M |
| Screw-hole and Wire-Entry Cover Plug Set | 91.201.1 | SHPC |
| *Panel Mount Tab | 93.001.5 | PMA/KU |

### ENCLOSURE DRAWING (To convert to inches divide by 25.4.)

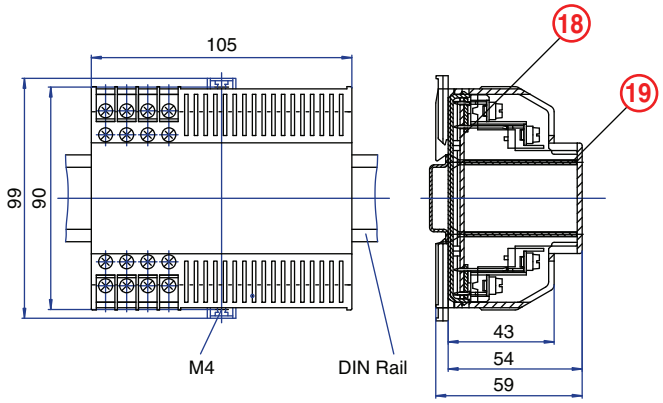


### PCB DRAWING (To convert to inches divide by 25.4.)

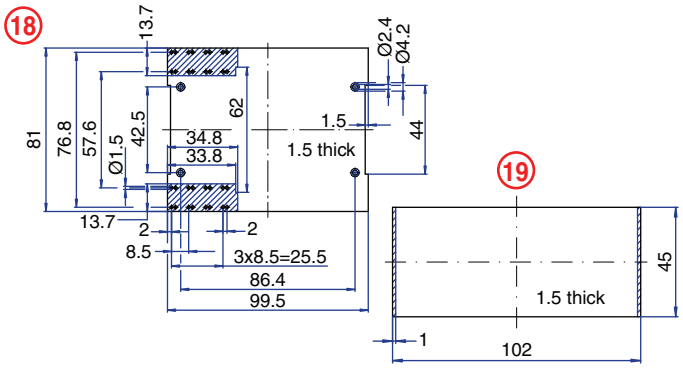


unused space

## 24 Terminal

### Vertical PCB Screw Clamp

### TECHNICAL INFORMATION

**Electrical:**
16A, 300V, 22-14 AWG

**Housing Material:**
Glass-filled Polycarbonate

**Temperature Range:**
Up to 125°C (257°F)

**Flammability Rating:**
UL94 V-O

**Color:**
Light Gray

**Terminal Type:**
Screw / Pressure Plate

**Terminal Screw Size:**
M3.5

**Recommended Torque:**
0.8Nm

**Max. PCB's:**
(6) Vertical

**Mounting:**
35mm DIN Rail or optional panel mounting*

### ORDERING INFORMATION

| Part Number | Type | Description | PCB Connection |
|---|---|---|---|
| 91.290 | KU4090B24 | Right Angle Pins | Machine Solder/ Wire Jumper |

### ACCESSORIES

| Accessories | Part Number | Type |
|---|---|---|
| 1 Meter DIN Rail | 2511120/1M | TS35x7.5/1M |
| Screw-hole and Wire-Entry Cover Plug Set | 91.201.1 | SHPC |
| *Panel Mount Tab | 93.001.5 | PMA/KU |

### ENCLOSURE DRAWING (To convert to inches divide by 25.4.)

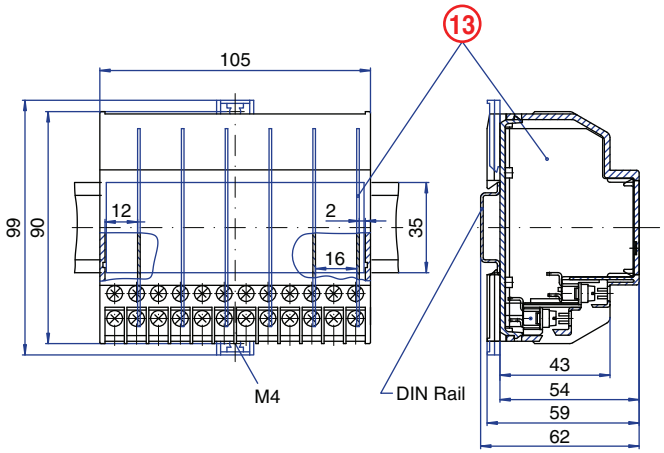


### PCB DRAWING (To convert to inches divide by 25.4.)

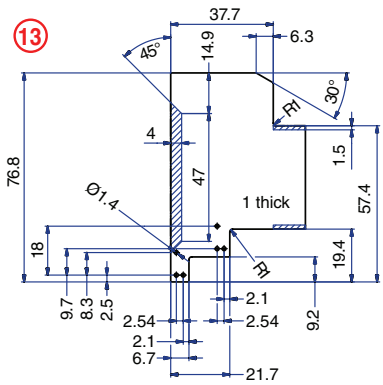


unused space

## 24 Terminal

### Horizontal PCB Screw Clamp

### TECHNICAL INFORMATION

**Electrical:**
16A, 300V, 22-14 AWG

**Housing Material:**
Glass-filled Polycarbonate

**Temperature Range:**
Up to 125°C (257°F)

**Flammability Rating:**
UL94 V-O

**Color:**
Light Gray

**Terminal Type:**
Screw / Pressure Plate

**Terminal Screw Size:**
M3.5

**Recommended Torque:**
0.8Nm

**Max. PCB's:**
(1) Horizontal (2) Vertical

**Mounting:**
35mm DIN Rail or optional panel mounting*

### ORDERING INFORMATION

| Part Number | Type | Description | PCB Connection |
|---|---|---|---|
| 91.270 | KU4090C24 | Straight Pins | Machine Solder |

### ACCESSORIES

| Accessories | Part Number | Type |
|---|---|---|
| 1 Meter DIN Rail | 2511120/1M | TS35x7.5/1M |
| Screw-hole and Wire-Entry Cover Plug Set | 91.201.1 | SHPC |
| *Panel Mount Tab | 93.001.5 | PMA/KU |

### ENCLOSURE DRAWING (To convert to inches divide by 25.4.)

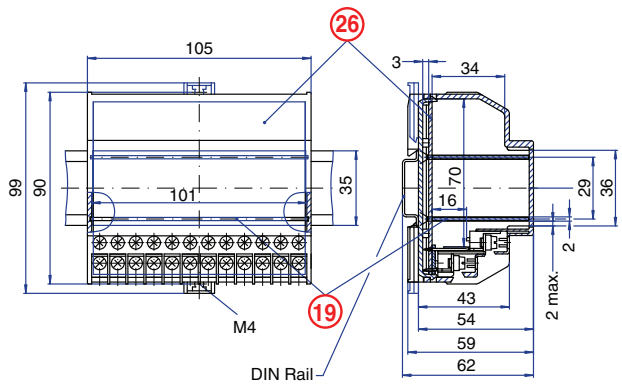


### PCB DRAWING (To convert to inches divide by 25.4.)

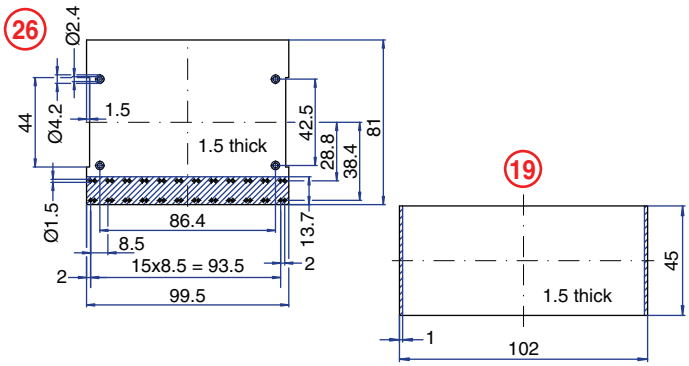


unused space

## 24 Terminal

### Vertical PCB Spring Clamp

### TECHNICAL INFORMATION

**Electrical:**
10A, 300V, 26-14 AWG

**Housing Material:**
Glass-filled Polycarbonate

**Temperature Range:**
Up to 125°C (257°F)

**Flammability Rating:**
UL94 V-O

**Color:**
Light Gray

**Terminal Type:**
Spring Cage Clamp

**Terminal Screw Size:**
–

**Recommended Torque:**
–

**Max. PCB's:**
(6) Vertical

**Mounting:**
35mm DIN Rail or optional panel mounting*

### ORDERING INFORMATION

| Part Number | Type | Description | PCB Connection |
|---|---|---|---|
| 91.590 | KU4040B | Right Angle Pins | Machine Solder/ Wire Jumper |

### ACCESSORIES

| Accessories | Part Number | Type |
|---|---|---|
| 1 Meter DIN Rail | 2511120/1M | TS35x7.5/1M |
| *Panel Mount Tab | 93.001.5 | PMA/KU |

### ENCLOSURE DRAWING (To convert to inches divide by 25.4.)

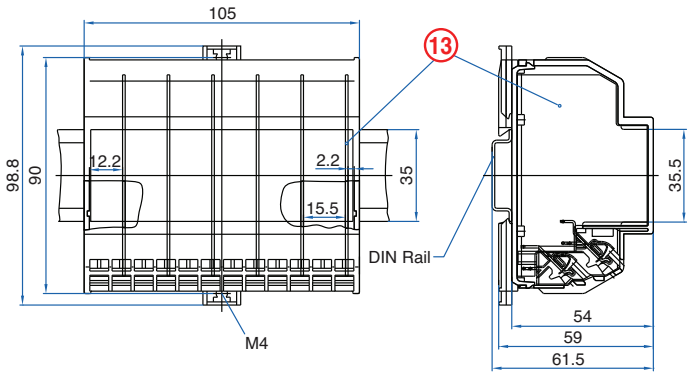


### PCB DRAWING (To convert to inches divide by 25.4.)

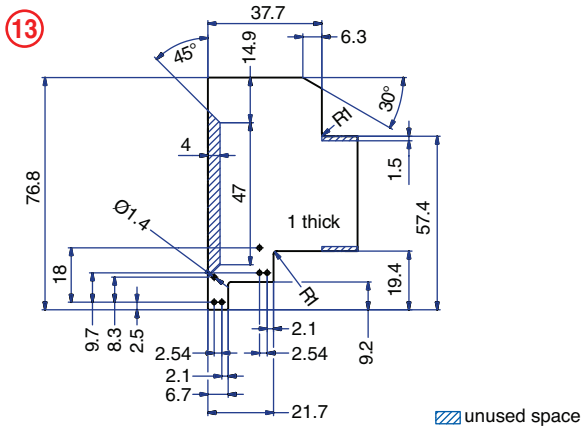


## 24 Terminal

### Horizontal PCB Spring Clamp

### TECHNICAL INFORMATION

**Electrical:**
10A, 300V, 26-14 AWG

**Housing Material:**
Glass-filled Polycarbonate

**Temperature Range:**
Up to 125°C (257°F)

**Flammability Rating:**
UL94 V-O

**Color:**
Light Gray

**Terminal Type:**
Spring Cage Clamp

**Terminal Screw Size:**
–

**Recommended Torque:**
–

**Max. PCB's:**
(1) Horizontal

**Mounting:**
35mm DIN Rail or optional panel mounting*

### ORDERING INFORMATION

| Part Number | Type | Description | PCB Connection |
|---|---|---|---|
| 91.570 | KU4040C | Straight Pins | Machine Solder |

### ACCESSORIES

| Accessories | Part Number | Type |
|---|---|---|
| 1 Meter DIN Rail | 2511120/1M | TS35x7.5/1M |
| *Panel Mount Tab | 93.001.5 | PMA/KU |

### ENCLOSURE DRAWING (To convert to inches divide by 25.4.)

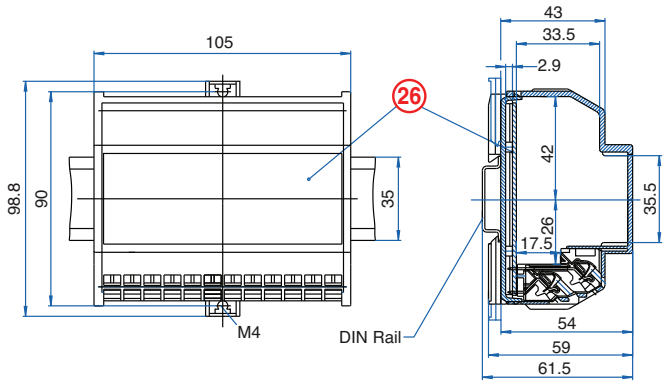


### PCB DRAWING (To convert to inches divide by 25.4.)

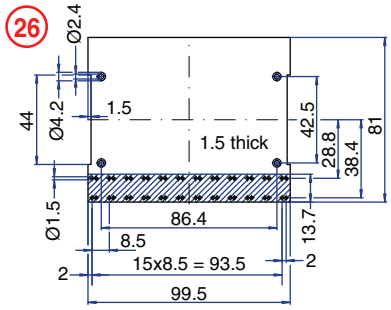

## 24 Terminal
### with 16 Standard and 8 High Current Terminals
### Vertical PCB
### Screw Clamp

### TECHNICAL INFORMATION

**Electrical:**
Standard Terminal:
16A, 300V, 22-14 AWG
High Current Terminal:
50A, 300V, 18-8 AWG

**Housing Material:**
Glass-filled Polycarbonate

**Temperature Range:**
Up to 125°C (257°F)

**Flammability Rating:**
UL94 V-O

**Color:** Light Gray

**Terminal Type:**
Standard: Screw/Pressure Plate
High Current: Box Clamp

**Terminal Screw Size:**
M3.5 / M4

**Recommended Torque:**
0.8Nm / 1.2Nm

**Max. PCB's:**
(3) Vertical

**Mounting:**
35mm DIN Rail or
optional panel mounting*

### ORDERING INFORMATION

| Part Number | Type | Description | PCB Connection |
|---|---|---|---|
| 91.750 | KU4090BHC | Right Angle Pins | Machine Solder/ Wire Jumper |

### ACCESSORIES

| Accessories | Part Number | Type |
|---|---|---|
| 1 Meter DIN Rail | 2511120/1M | TS35x7.5/1M |
| Screw-hole and Wire-Entry Cover Plug Set | 91.201.1 | SHPC |
| *Panel Mount Tab | 93.001.5 | PMA/KU |

### ENCLOSURE DRAWING (To convert to inches divide by 25.4.)

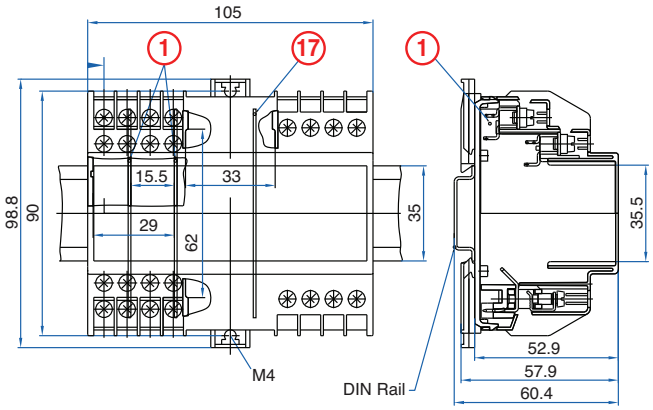


### PCB DRAWING (To convert to inches divide by 25.4.)

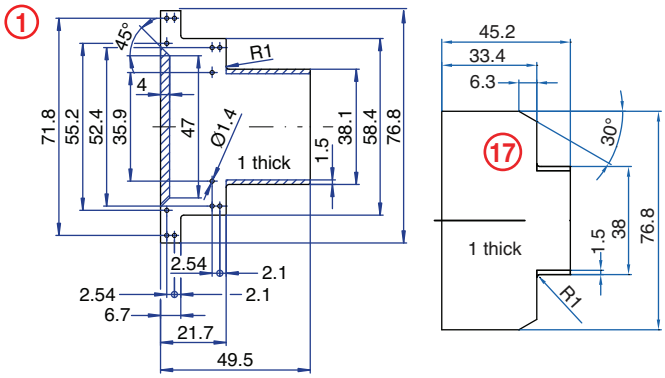


unused space

## 24 Terminal
### with 16 Standard and 8 High Current Terminals
### Vertical PCB
### Screw Clamp

### TECHNICAL INFORMATION

**Electrical:**
Standard Terminal:
16A, 300V, 22-14 AWG
High Current Terminal:
50A, 300V, 18-8 AWG

**Housing Material:**
Glass-filled Polycarbonate

**Temperature Range:**
Up to 125°C (257°F)

**Flammability Rating:**
UL94 V-O

**Color:** Light Gray

**Terminal Type:**
Standard: Screw/Pressure Plate
High Current: Box Clamp

**Terminal Screw Size:**
M3.5 / M4

**Recommended Torque:**
0.8Nm / 1.2Nm

**Max. PCB's:**
(1) Horizontal, (2) Vertical

**Mounting:**
35mm DIN Rail or
optional panel mounting*

### ORDERING INFORMATION

| Part Number | Type | Description | PCB Connection |
|---|---|---|---|
| 91.760 | KU4090CHC | Straight Pins | Machine Solder/ Wire Jumper |

### ACCESSORIES

| Accessories | Part Number | Type |
|---|---|---|
| 1 Meter DIN Rail | 2511120/1M | TS35x7.5/1M |
| Screw-hole and Wire-Entry Cover Plug Set | 91.201.1 | SHPC |
| *Panel Mount Tab | 93.001.5 | PMA/KU |

### ENCLOSURE DRAWING (To convert to inches divide by 25.4.)

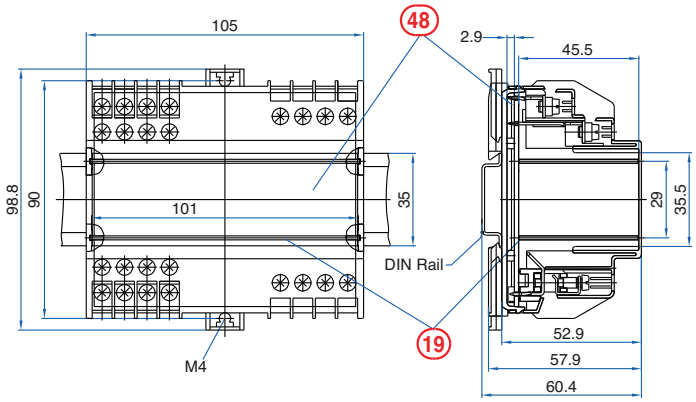


### PCB DRAWING (To convert to inches divide by 25.4.)

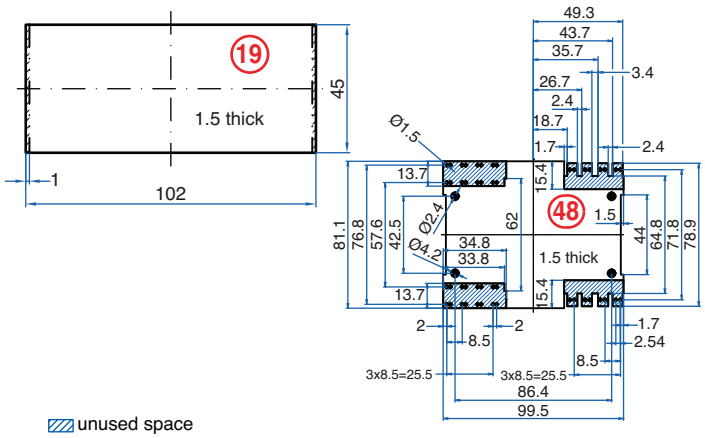


unused space

## 48 Terminal

### Vertical PCB Screw Clamp

### TECHNICAL INFORMATION

**Electrical:**
16A, 300V, 22-14 AWG

**Housing Material:**
Glass-filled Polycarbonate

**Temperature Range:**
Up to 125°C (257°F)

**Flammability Rating:**
UL94 V-O

**Color:**
Light Gray

**Terminal Type:**
Screw / Pressure Plate

**Terminal Screw Size:**
M3.5

**Recommended Torque:**
0.8Nm

**Max. PCB's:**
(6) Vertical

**Mounting:**
35mm DIN Rail or optional panel mounting*

### ORDERING INFORMATION

| Part Number | Type | Description | PCB Connection |
|---|---|---|---|
| 91.330 | KU4090B48 | Right Angle Pins | Machine Solder/ Wire Jumper |

### ACCESSORIES

| Accessories | Part Number | Type |
|---|---|---|
| 1 Meter DIN Rail | 2511120/1M | TS35x7.5/1M |
| Screw-hole and Wire-Entry Cover Plug Set | 91.201.1 | SHPC |
| *Panel Mount Tab | 93.001.5 | PMA/KU |

### ENCLOSURE DRAWING (To convert to inches divide by 25.4.)

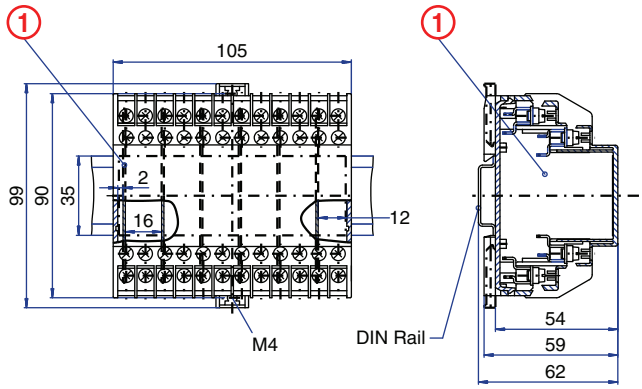


### PCB DRAWING (To convert to inches divide by 25.4.)

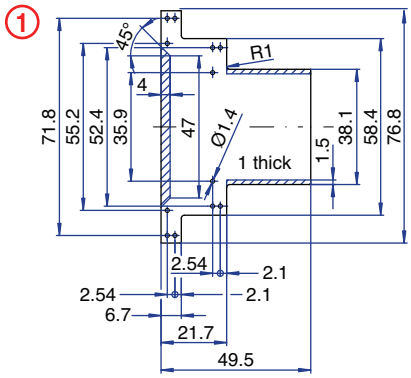


unused space

## 48 Terminal

### Horizontal PCB Screw Clamp

### TECHNICAL INFORMATION

**Electrical:**
16A, 300V, 22-14 AWG

**Housing Material:**
Glass-filled Polycarbonate

**Temperature Range:**
Up to 125°C (257°F)

**Flammability Rating:**
UL94 V-O

**Color:**
Light Gray

**Terminal Type:**
Screw / Pressure Plate

**Terminal Screw Size:**
M3.5

**Recommended Torque:**
0.8Nm

**Max. PCB's:**
(1) Horizontal, (2) Vertical

**Mounting:**
35mm DIN Rail or optional panel mounting*

### ORDERING INFORMATION

| Part Number | Type | Description | PCB Connection |
|---|---|---|---|
| 91.310 | KU4090C48 | Straight Pins | Machine Solder |

### ACCESSORIES

| Accessories | Part Number | Type |
|---|---|---|
| 1 Meter DIN Rail | 2511120/1M | TS35x7.5/1M |
| Screw-hole and Wire-Entry Cover Plug Set | 91.201.1 | SHPC |
| *Panel Mount Tab | 93.001.5 | PMA/KU |

### ENCLOSURE DRAWING (To convert to inches divide by 25.4.)

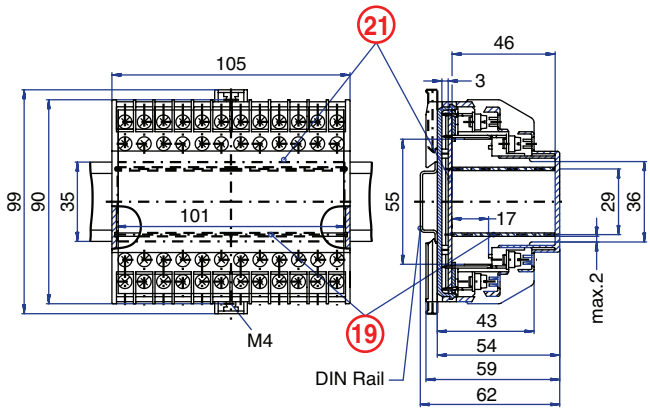


### PCB DRAWING (To convert to inches divide by 25.4.)

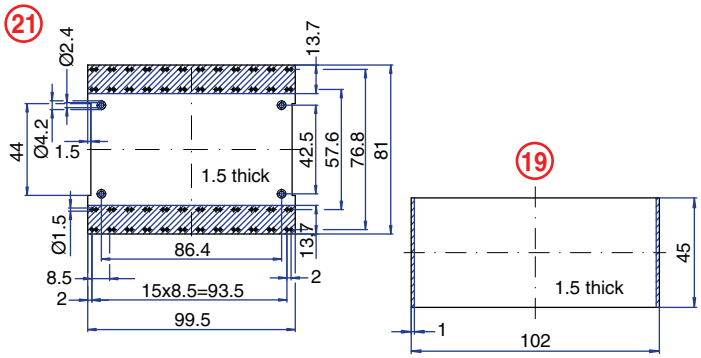


unused space

## 32 Terminal

**Vertical PCB**
**Screw Clamp**
**terminals on one side only**

### TECHNICAL INFORMATION

**Electrical:**
16A, 300V, 22-14 AWG
**Housing Material:**
Glass-filled Polycarbonate
**Temperature Range:**
Up to 125°C (257°F)
**Flammability Rating:**
UL94 V-O
**Color:**
Light Gray

**Terminal Type:**
Screw / Pressure Plate
**Terminal Screw Size:**
M3.5
**Recommended Torque:**
0.8Nm
**Max. PCB's:**
(8) Vertical
**Mounting:**
35mm DIN Rail or optional panel mounting*

### ORDERING INFORMATION

| Part Number | Type | Description | PCB Connection |
|---|---|---|---|
| 91.320 | KU4011B | Right Angle Pins | Machine Solder/ Wire Jumper |

### ACCESSORIES

| Accessories | Part Number | Type |
|---|---|---|
| 1 Meter DIN Rail | 2511120/1M | TS35x7.5/1M |
| Screw-hole and Wire-Entry Cover Plug Set | 91.201.1 | SHPC |
| *Panel Mount Tab | 93.001.5 | PMA/KU |

### ENCLOSURE DRAWING (To convert to inches divide by 25.4.)

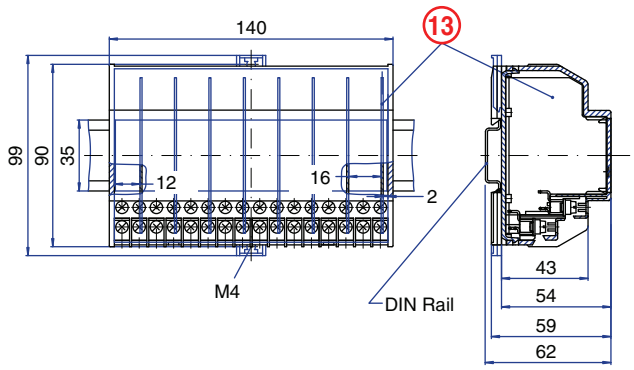


### PCB DRAWING (To convert to inches divide by 25.4.)

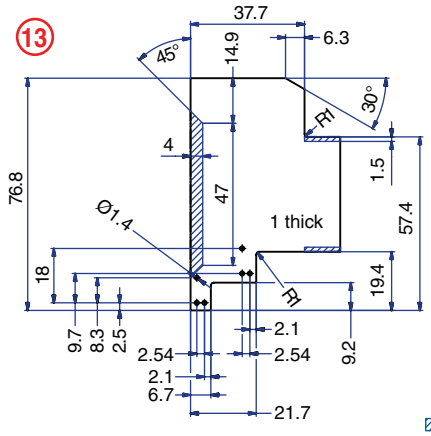


unused space

## 32 Terminal

**Horizontal PCB**
**Screw Clamp**
**terminals on one side only**

### TECHNICAL INFORMATION

**Electrical:**
16A, 300V, 22-14 AWG
**Housing Material:**
Glass-filled Polycarbonate
**Temperature Range:**
Up to 125°C (257°F)
**Flammability Rating:**
UL94 V-O
**Color:**
Light Gray

**Terminal Type:**
Screw / Pressure Plate
**Terminal Screw Size:**
M3.5
**Recommended Torque:**
0.8Nm
**Max. PCB's:**
(1) Horizontal, (2) Vertical
**Mounting:**
35mm DIN Rail or optional panel mounting*

### ORDERING INFORMATION

| Part Number | Type | Description | PCB Connection |
|---|---|---|---|
| 91.300 | KU4011C | Straight Pins | Machine Solder |

### ACCESSORIES

| Accessories | Part Number | Type |
|---|---|---|
| 1 Meter DIN Rail | 2511120/1M | TS35x7.5/1M |
| Screw-hole and Wire-Entry Cover Plug Set | 91.201.1 | SHPC |
| *Panel Mount Tab | 93.001.5 | PMA/KU |

### ENCLOSURE DRAWING (To convert to inches divide by 25.4.)

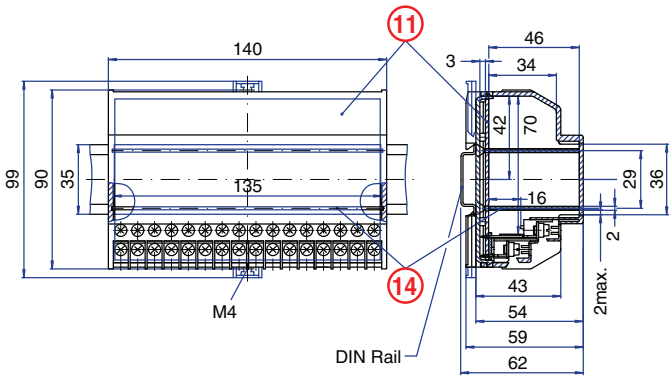


### PCB DRAWING (To convert to inches divide by 25.4.)

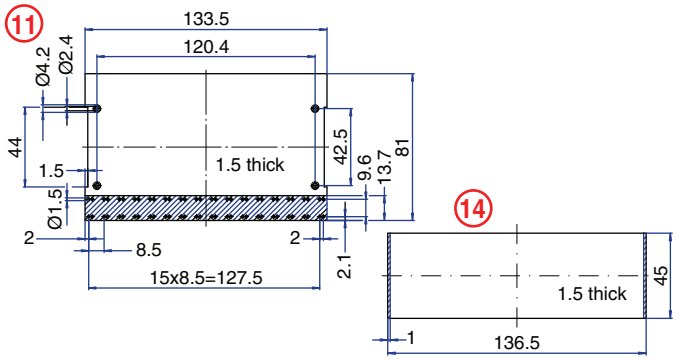


unused space

## 32 Terminal

**Vertical PCB**
**Screw Clamp**
**terminals in corners only**

### TECHNICAL INFORMATION

**Electrical:**
16A, 300V, 22-14 AWG

**Housing Material:**
Glass-filled Polycarbonate

**Temperature Range:**
Up to 125°C (257°F)

**Flammability Rating:**
UL94 V-O

**Color:**
Light Gray

**Terminal Type:**
Screw / Pressure Plate

**Terminal Screw Size:**
M3.5

**Recommended Torque:**
0.8Nm

**Max. PCB's:**
(4) Vertical

**Mounting:**
35mm DIN Rail or
optional panel mounting*

### ORDERING INFORMATION

| Part Number | Type | Description | PCB Connection |
|---|---|---|---|
| 91.360 | KU4012B | Right Angle Pins | Machine Solder/ Wire Jumper |

### ACCESSORIES

| Accessories | Part Number | Type |
|---|---|---|
| 1 Meter DIN Rail | 2511120/1M | TS35x7.5/1M |
| Screw-hole and Wire-Entry Cover Plug Set | 91.201.1 | SHPC |
| *Panel Mount Tab | 93.001.5 | PMA/KU |

### ENCLOSURE DRAWING (To convert to inches divide by 25.4.)

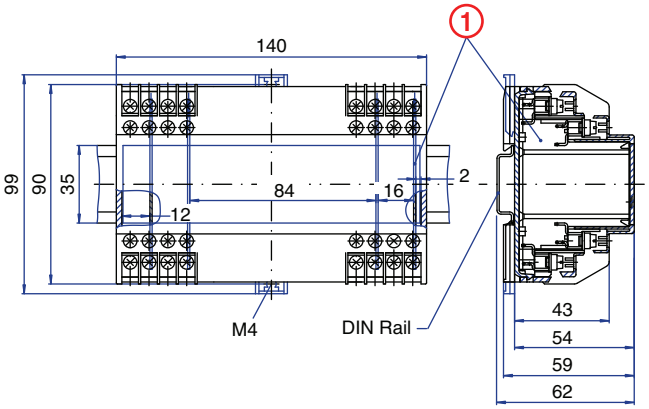


### PCB DRAWING (To convert to inches divide by 25.4.)

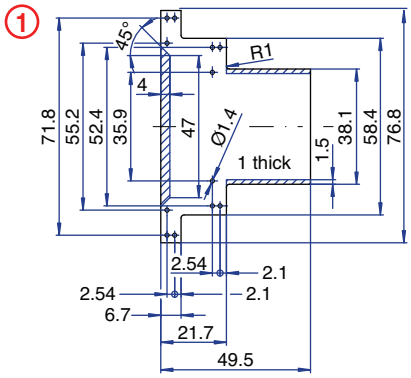


unused space

## 32 Terminal

**Horizontal PCB**
**Screw Clamp**
**terminals in corners only**

### TECHNICAL INFORMATION

**Electrical:**
16A, 300V, 22-14 AWG

**Housing Material:**
Glass-filled Polycarbonate

**Temperature Range:**
Up to 125°C (257°F)

**Flammability Rating:**
UL94 V-O

**Color:**
Light Gray

**Terminal Type:**
Screw / Pressure Plate

**Terminal Screw Size:**
M3.5

**Recommended Torque:**
0.8Nm

**Max. PCB's:**
(1) Horizontal, (2) Vertical

**Mounting:**
35mm DIN Rail or
optional panel mounting*

### ORDERING INFORMATION

| Part Number | Type | Description | PCB Connection |
|---|---|---|---|
| 91.340 | KU4012C | Straight Pins | Machine Solder |

### ACCESSORIES

| Accessories | Part Number | Type |
|---|---|---|
| 1 Meter DIN Rail | 2511120/1M | TS35x7.5/1M |
| Screw-hole and Wire-Entry Cover Plug Set | 91.201.1 | SHPC |
| *Panel Mount Tab | 93.001.5 | PMA/KU |

### ENCLOSURE DRAWING (To convert to inches divide by 25.4.)

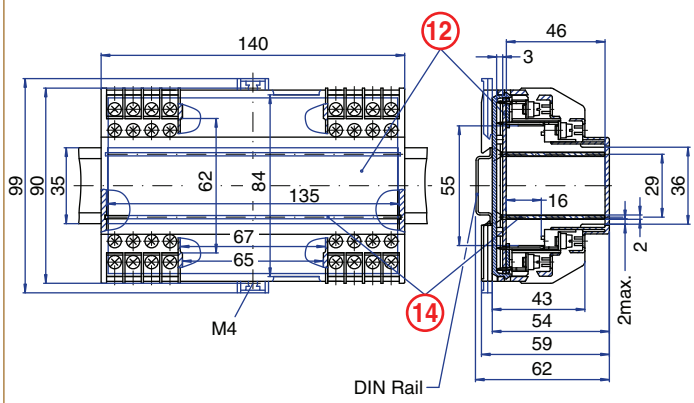


### PCB DRAWING (To convert to inches divide by 25.4.)

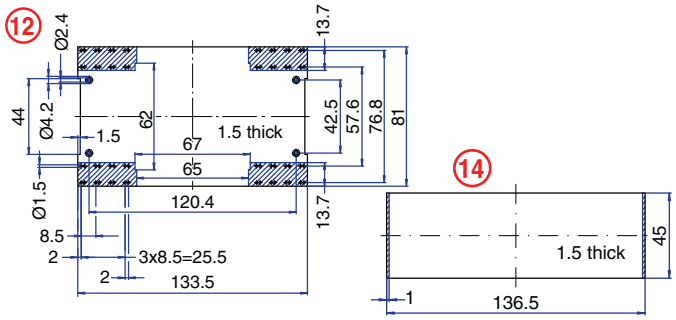


unused space

## 32 Terminal

**Vertical PCB**
**Screw Clamp**
**with vent slots**

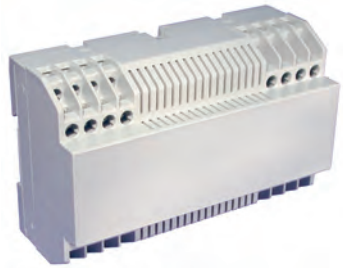

### TECHNICAL INFORMATION

**Electrical:**
16A, 300V, 22-14 AWG

**Housing Material:**
Glass-filled Polycarbonate

**Temperature Range:**
Up to 125°C (257°F)

**Flammability Rating:**
UL94 V-O

**Color:**
Light Gray

**Terminal Type:**
Screw / Pressure Plate

**Terminal Screw Size:**
M3.5

**Recommended Torque:**
0.8Nm

**Max. PCB's:**
(1) Vertical

**Mounting:**
35mm DIN Rail or
optional panel mounting*

### ORDERING INFORMATION

| Part Number | Type | Description | PCB Connection |
|---|---|---|---|
| 91.365 | KU4012BV | Right Angle Pins | Machine Solder/ Wire Jumper |

### ACCESSORIES

| Accessories | Part Number | Type |
|---|---|---|
| 1 Meter DIN Rail | 2511120/1M | TS35x7.5/1M |
| Screw-hole and Wire-Entry Cover Plug Set | 91.201.1 | SHPC |
| *Panel Mount Tab | 93.001.5 | PMA/KU |

### ENCLOSURE DRAWING (To convert to inches divide by 25.4.)

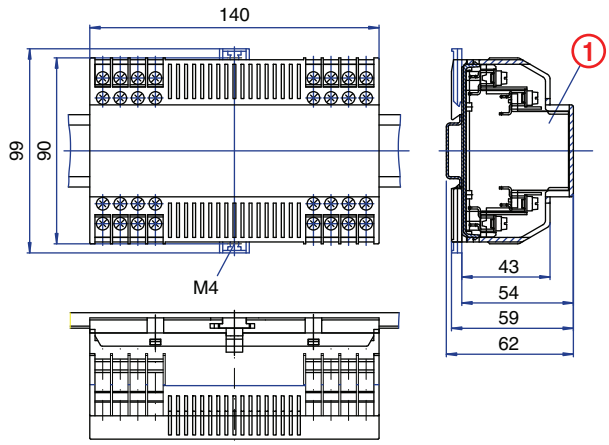


### PCB DRAWING (To convert to inches divide by 25.4.)

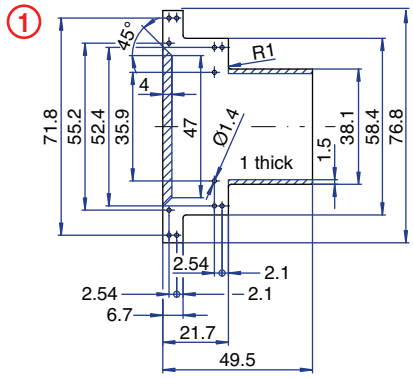


unused space

## 32 Terminal

**Horizontal PCB**
**Screw Clamp**
**with vent slots**

### TECHNICAL INFORMATION

**Electrical:**
16A, 300V, 22-14 AWG

**Housing Material:**
Glass-filled Polycarbonate

**Temperature Range:**
Up to 125°C (257°F)

**Flammability Rating:**
UL94 V-O

**Color:**
Light Gray

**Terminal Type:**
Screw / Pressure Plate

**Terminal Screw Size:**
M3.5

**Recommended Torque:**
0.8Nm

**Max. PCB's:**
(1) Horizontal

**Mounting:**
35mm DIN Rail or
optional panel mounting*

### ORDERING INFORMATION

| Part Number | Type | Description | PCB Connection |
|---|---|---|---|
| 91.345 | KU4012CV | Straight Pins | Machine Solder |

### ACCESSORIES

| Accessories | Part Number | Type |
|---|---|---|
| 1 Meter DIN Rail | 2511120/1M | TS35x7.5/1M |
| Screw-hole and Wire-Entry Cover Plug Set | 91.201.1 | SHPC |
| *Panel Mount Tab | 93.001.5 | PMA/KU |

### ENCLOSURE DRAWING (To convert to inches divide by 25.4.)

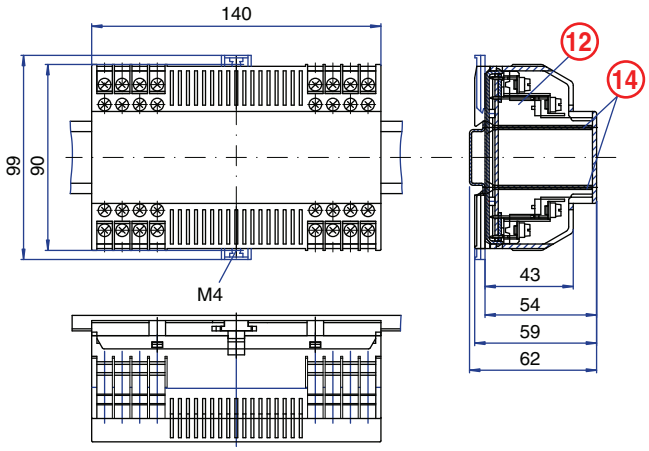


### PCB DRAWING (To convert to inches divide by 25.4.)

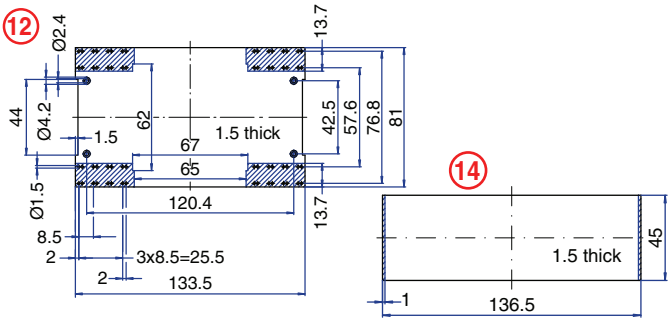


unused space

## 64 Terminal

### Vertical PCB Screw Clamp

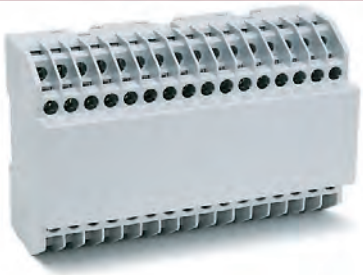

### TECHNICAL INFORMATION

**Electrical:**
16A, 300V, 22-14 AWG

**Housing Material:**
Glass-filled Polycarbonate

**Temperature Range:**
Up to 125°C (257°F)

**Flammability Rating:**
UL94 V-O

**Color:**
Light Gray

**Terminal Type:**
Screw / Pressure Plate

**Terminal Screw Size:**
M3.5

**Recommended Torque:**
0.8Nm

**Max. PCB's:**
(8) Vertical

**Mounting:**
35mm DIN Rail or optional panel mounting*

### ORDERING INFORMATION

| Part Number | Type | Description | PCB Connection |
|---|---|---|---|
| 91.400 | KU4013B | Right Angle Pins | Machine Solder/ Wire Jumper |

### ACCESSORIES

| Accessories | Part Number | Type |
|---|---|---|
| 1 Meter DIN Rail | 2511120/1M | TS35x7.5/1M |
| Screw-hole and Wire-Entry Cover Plug Set | 91.201.1 | SHPC |
| *Panel Mount Tab | 93.001.5 | PMA/KU |

### ENCLOSURE DRAWING (To convert to inches divide by 25.4.)

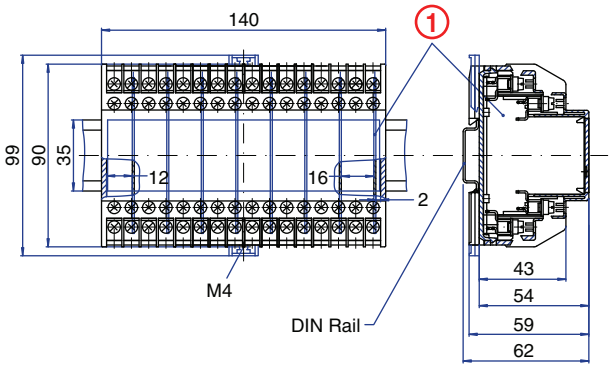


### PCB DRAWING (To convert to inches divide by 25.4.)

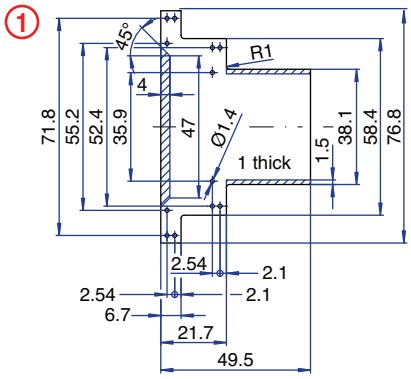


unused space

## 64 Terminal

### Horizontal PCB Screw Clamp

### TECHNICAL INFORMATION

**Electrical:**
16A, 300V, 22-14 AWG

**Housing Material:**
Glass-filled Polycarbonate

**Temperature Range:**
Up to 125°C (257°F)

**Flammability Rating:**
UL94 V-O

**Color:**
Light Gray

**Terminal Type:**
Screw / Pressure Plate

**Terminal Screw Size:**
M3.5

**Recommended Torque:**
0.8Nm

**Max. PCB's:**
(1) Horizontal, (2) Vertical

**Mounting:**
35mm DIN Rail or optional panel mounting*

### ORDERING INFORMATION

| Part Number | Type | Description | PCB Connection |
|---|---|---|---|
| 91.380 | KU4013C | Straight Pins | Machine Solder |

### ACCESSORIES

| Accessories | Part Number | Type |
|---|---|---|
| 1 Meter DIN Rail | 2511120/1M | TS35x7.5/1M |
| Screw-hole and Wire-Entry Cover Plug Set | 91.201.1 | SHPC |
| *Panel Mount Tab | 93.001.5 | PMA/KU |

### ENCLOSURE DRAWING (To convert to inches divide by 25.4.)

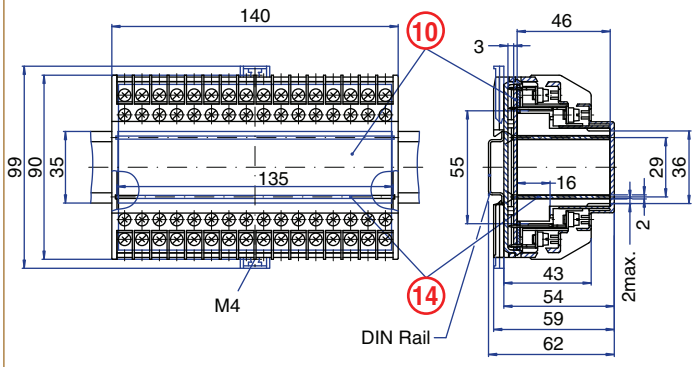


### PCB DRAWING (To convert to inches divide by 25.4.)

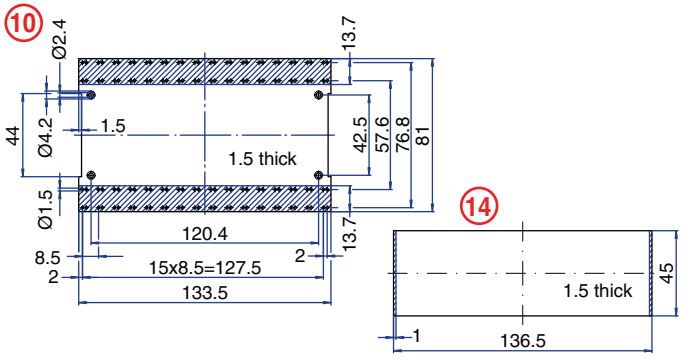


unused space

## 64 Terminal

### Vertical PCB
### Spring Clamp

### TECHNICAL INFORMATION

**Electrical:**
10A, 300V, 26-14 AWG

**Housing Material:**
Glass-filled Polycarbonate

**Temperature Range:**
Up to 125°C (257°F)

**Flammability Rating:**
UL94 V-O

**Color:**
Light Gray

**Terminal Type:**
Spring Cage Clamp

**Terminal Screw Size:**
–

**Recommended Torque:**
–

**Max. PCB's:**
(8) Vertical

**Mounting:**
35mm DIN Rail or optional panel mounting*

### ORDERING INFORMATION

| Part Number | Type | Description | PCB Connection |
|---|---|---|---|
| 91.600 | KU4041B | Right Angle Pins | Machine Solder/ Wire Jumper |

### ACCESSORIES

| Accessories | Part Number | Type |
|---|---|---|
| 1 Meter DIN Rail | 2511120/1M | TS35x7.5/1M |
| *Panel Mount Tab | 93.001.5 | PMA/KU |

### ENCLOSURE DRAWING (To convert to inches divide by 25.4.)

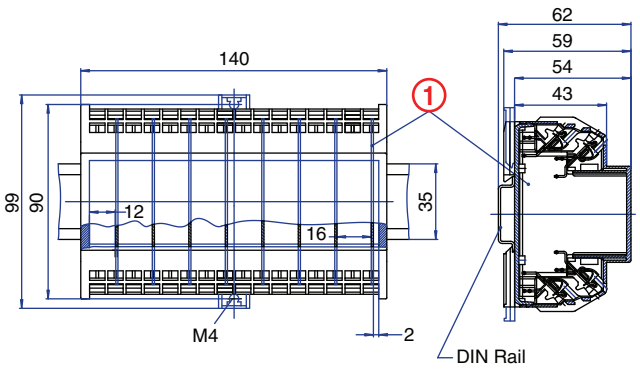


### PCB DRAWING (To convert to inches divide by 25.4.)

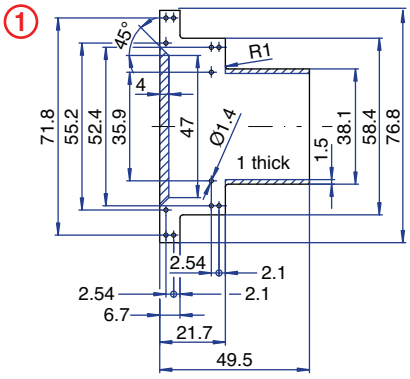


unused space

## 64 Terminal

### Horizontal PCB
### Spring Clamp

### TECHNICAL INFORMATION

**Electrical:**
10A, 300V, 26-14 AWG

**Housing Material:**
Glass-filled Polycarbonate

**Temperature Range:**
Up to 125°C (257°F)

**Flammability Rating:**
UL94 V-O

**Color:**
Light Gray

**Terminal Type:**
Spring Cage Clamp

**Terminal Screw Size:**
–

**Recommended Torque:**
–

**Max. PCB's:**
(1) Horizontal

**Mounting:**
35mm DIN Rail or optional panel mounting*

### ORDERING INFORMATION

| Part Number | Type | Description | PCB Connection |
|---|---|---|---|
| 91.610 | KU4041C | Straight Pins | Machine Solder |

### ACCESSORIES

| Accessories | Part Number | Type |
|---|---|---|
| 1 Meter DIN Rail | 2511120/1M | TS35x7.5/1M |
| *Panel Mount Tab | 93.001.5 | PMA/KU |

### ENCLOSURE DRAWING (To convert to inches divide by 25.4.)

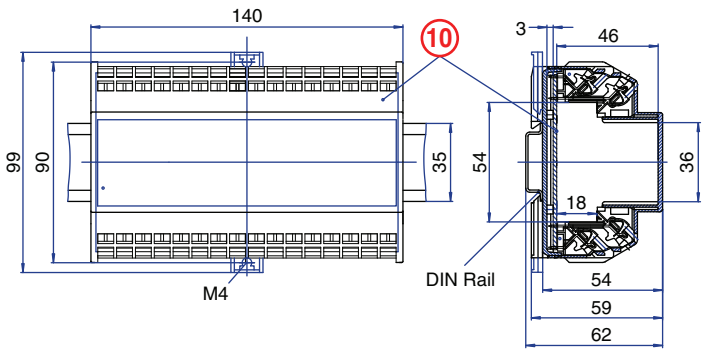


### PCB DRAWING (To convert to inches divide by 25.4.)

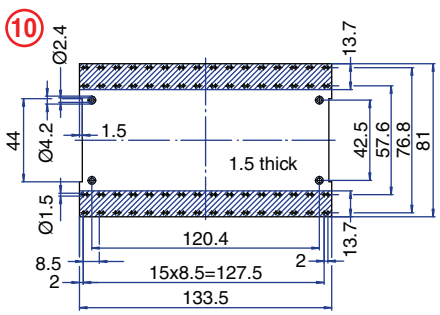


unused space

# KU4100 Series

The versatile **KU4100 series** features a compact design with different terminal configuration options. They are available in six widths with double level terminal locations. Terminal configuration options include blank enclosures with no terminal openings, fixed PCB terminals and pluggable PCB terminals.

## MATERIALS

### *Housing*

Housing Shell: Polycarbonate, 10% Glass Filled
Base: Polycarbonate, 10% Glass Filled

### *Terminals*

Housing: Polyamide
Terminal Pins: Tinned Brass

## TEMPERATURE RATING:

115°C (239°F) UL94V0
Housing: Light Gray Cover with Black Base

## PROTECTION

KU4100 enclosures have an IP30 rating, IP20 for terminal openings, (finger protected) and meet VBG4 and other European accident prevention requirements.

## CONSTRUCTION

The KU4100 enclosure series housings are supplied as unassembled kits. Each kit consists of a flat base, a housing cover and terminal sets where applicable. The terminals are set on two levels to maximize space. The terminals are machine solderable. Integral printed circuit guides are molded into the cover for proper board insertion and containment. Multiple boards can be mounted in each enclosure, usually 2 PCBs are used with the terminals and one additional PCB can be used for display or control elements in the enclosure front.

## TERMINALS

There are 4 options available; no terminal openings, fixed PCB terminals, pluggable PCB terminals and high current terminals. The terminal blocks are all machine solderable.
The option of no terminal openings allows for custom openings to be made to accommodate alternate connector types.
Fixed PCB terminals are standard screw cage clamp style terminal blocks. Terminal covers are available for the fixed PCB terminal version to cover unused terminals. The terminal cover is a 12 pole strip that is breakable into individual poles. It snaps into the enclosure covering the screw hole and wire entry areas.
Pluggable PCB terminals feature male pin headers and female screw cage clamp plugs that can be plugged/unplugged. **Power source must be disconnected before plugging/unplugging terminals.**
High current terminals feature rising clamps where the wire is clamped between the clamp and the terminal strip.

## MOUNTING

The KU4100 series can easily be mounted on standard 35mm DIN rail by means of the integral mounting foot and DIN clip.

## CUSTOMIZATION

We can supply the KU4100 series enclosures with many custom options including:

- Partial terminal loading
- Enclosure bus connections
- Ventilation Slots
- Machining of custom holes

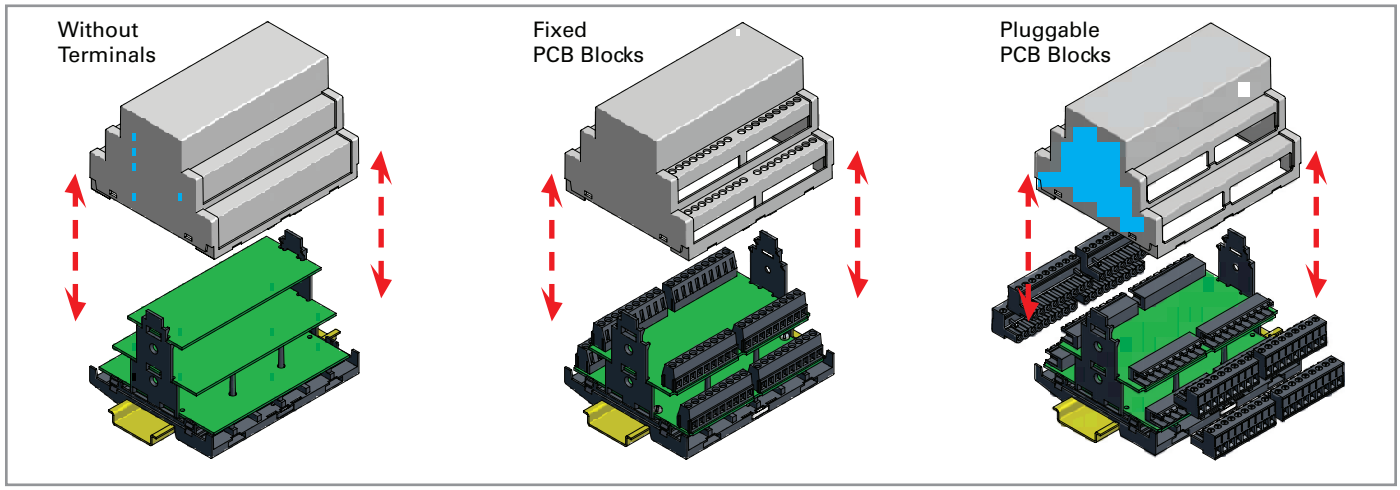

## 17.5mm Enclosure

### Without Terminals

### TECHNICAL INFORMATION

**Electrical:**
–

**Housing Material:**
Glass-filled Polycarbonate

**Temperature Range:**
Up to 115°C (239°F)

**Flammability Rating:**
UL94 V-O

**Color:**
Light Gray Cover, Black Base

**Terminal Type:**
–

**Terminal Screw Size:**
–

**Recommended Torque:**
–

**PCB Locations:**
(1) Vertical, Perpendicular

**Mounting:**
35mm DIN Rail

### ORDERING INFORMATION

| Part Number | Type | Description | PCB Connection |
|---|---|---|---|
| 91.800 | KU4187B | Without Terminals | None |

### ACCESSORIES

| Accessories | Part Number | Type |
|---|---|---|
| 1 Meter DIN Rail | 2511120/1M | TS35x7.5/1M |

### ENCLOSURE DRAWING (To convert to inches divide by 25.4.)

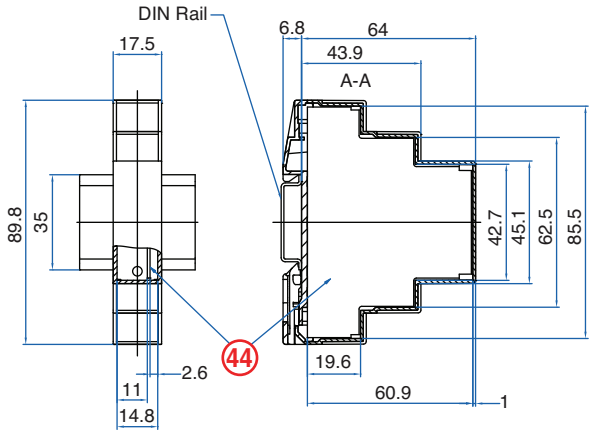


### PCB DRAWING (To convert to inches divide by 25.4.)

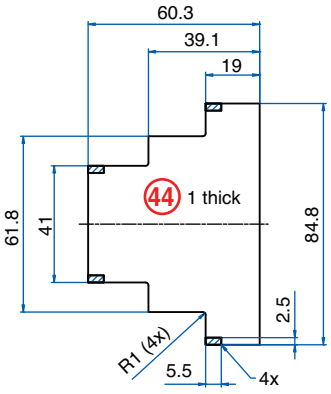


unused space

## 12 Terminal

### Fixed PCB Blocks

### TECHNICAL INFORMATION

**Electrical:**
12A, 250V, 24-12 AWG

**Housing Material:**
Glass-filled Polycarbonate

**Temperature Range:**
Up to 115°C (239°F)

**Flammability Rating:**
UL94 V-O

**Color:**
Light Gray Cover, Black Base and Terminals

**Terminal Type:**
Screw / Rising Clamp

**Terminal Screw Size:**
M2.5

**Recommended Torque:**
0.4Nm

**PCB Locations:**
(1) Vertical, Perpendicular

**Mounting:**
35mm DIN Rail

### ORDERING INFORMATION

| Part Number | Type | Description | PCB Connection |
|---|---|---|---|
| 91.801 | KU4187F | Fixed PCB Terminal | Machine Solder |

### ACCESSORIES

| Accessories | Part Number | Type |
|---|---|---|
| 1 Meter DIN Rail | 2511120/1M | TS35x7.5/1M |
| Terminal Cover (12 pole) | 91.801.1 | TCS/12 |

### ENCLOSURE DRAWING (To convert to inches divide by 25.4.)

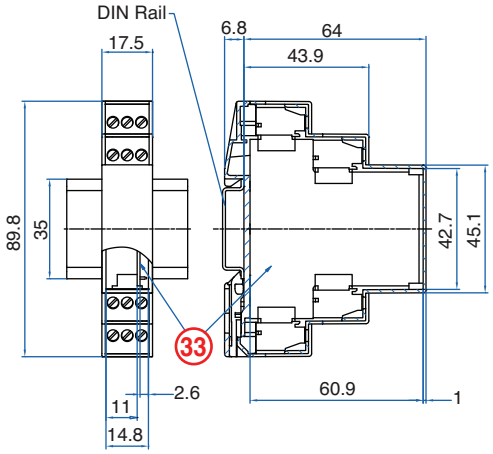


### PCB DRAWING (To convert to inches divide by 25.4.)

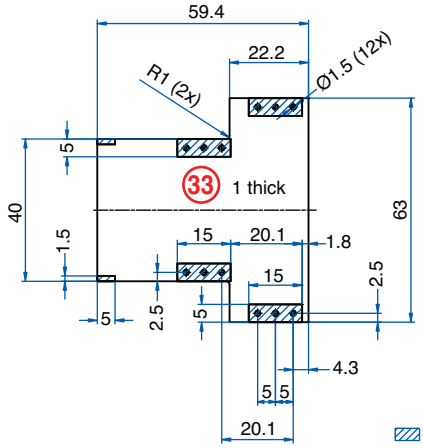


unused space

## 12 Terminal

### Pluggable PCB Plugs / Headers

### TECHNICAL INFORMATION

**Electrical:**
12A, 250V, 28-14 AWG

**Housing Material:**
Glass-filled Polycarbonate

**Temperature Range:**
Up to 115°C (239°F)

**Flammability Rating:**
UL94 V-O

**Color:**
Light Gray Cover, Black Base and Terminals

**Terminal Type:**
Screw / Rising Clamp

**Terminal Screw Size:**
M2.5

**Recommended Torque:**
0.4Nm

**PCB Locations:**
(1) Vertical, Perpendicular

**Mounting:**
35mm DIN Rail

### ORDERING INFORMATION

| Part Number | Type | Description | PCB Connection |
|---|---|---|---|
| 91.802 | KU4187P | Pluggable PCB Terminals | Machine Solder |

### ACCESSORIES

| Accessories | Part Number | Type |
|---|---|---|
| 1 Meter DIN Rail | 2511120/1M | TS35x7.5/1M |

### ENCLOSURE DRAWING (To convert to inches divide by 25.4.)

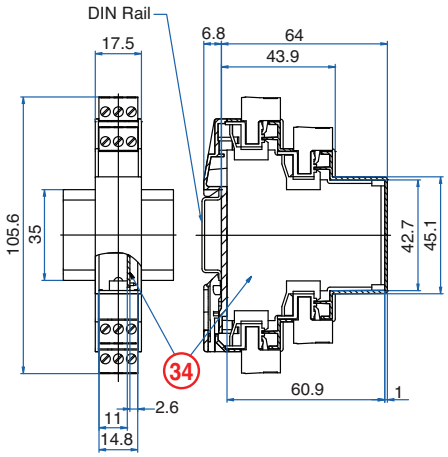


### PCB DRAWING (To convert to inches divide by 25.4.)

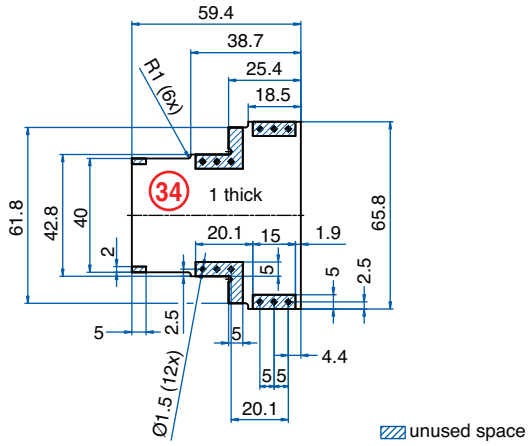


## 8 Terminal

### High Current PCB Blocks

### TECHNICAL INFORMATION

**Electrical:**
40A, 250V, 20-8 AWG

**Housing Material:**
Glass-filled Polycarbonate

**Temperature Range:**
Up to 115°C (239°F)

**Flammability Rating:**
UL94 V-O

**Color:**
Light Gray Cover, Black Base

**Terminal Type:**
Screw / Rising Clamp

**Terminal Screw Size:**
M3.5

**Recommended Torque:**
1.2Nm

**PCB Locations:**
(1) Vertical, Perpendicular

**Mounting:**
35mm DIN Rail

### ORDERING INFORMATION

| Part Number | Type | Description | PCB Connection |
|---|---|---|---|
| 91.803 | KU4187HC | High Current Terminals | Machine Solder |

### ACCESSORIES

| Accessories | Part Number | Type |
|---|---|---|
| 1 Meter DIN Rail | 2511120/1M | TS35x7.5/1M |

### ENCLOSURE DRAWING (To convert to inches divide by 25.4.)

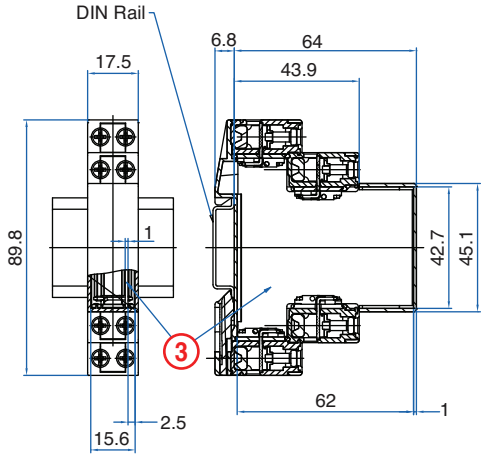


### PCB DRAWING (To convert to inches divide by 25.4.)

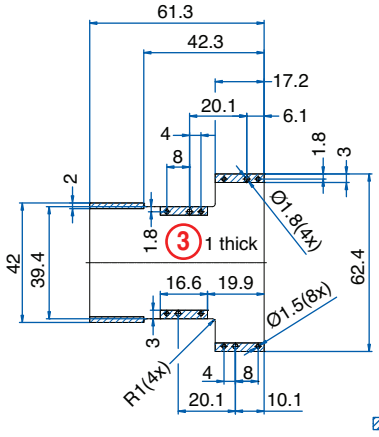

## 35mm Enclosure

### Without Terminals

### TECHNICAL INFORMATION

**Electrical:**
–

**Housing Material:**
Glass-filled Polycarbonate

**Temperature Range:**
Up to 115°C (239°F)

**Flammability Rating:**
UL94 V-O

**Color:**
Light Gray Cover, Black Base

**Terminal Type:**
–

**Terminal Screw Size:**
–

**Recommended Torque:**
–

**PCB Locations:**
(3) Vertical, Parallel

**Mounting:**
35mm DIN Rail

### ORDERING INFORMATION

| Part Number | Type | Description | PCB Connection |
|---|---|---|---|
| 91.810 | KU4188B | Without Terminals | None |

### ACCESSORIES

| Accessories | Part Number | Type |
|---|---|---|
| 1 Meter DIN Rail | 2511120/1M | TS35x7.5/1M |

### ENCLOSURE DRAWING (To convert to inches divide by 25.4.)

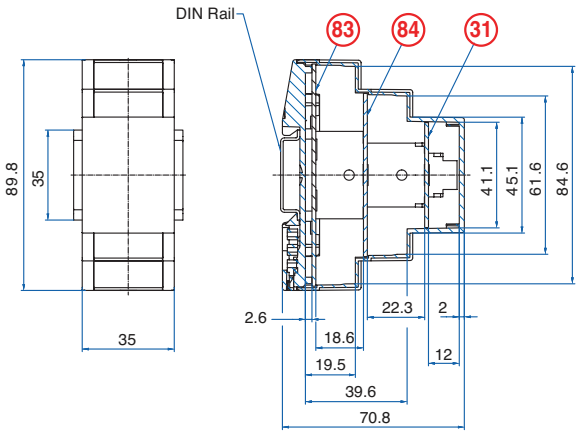


### PCB DRAWING (To convert to inches divide by 25.4.)

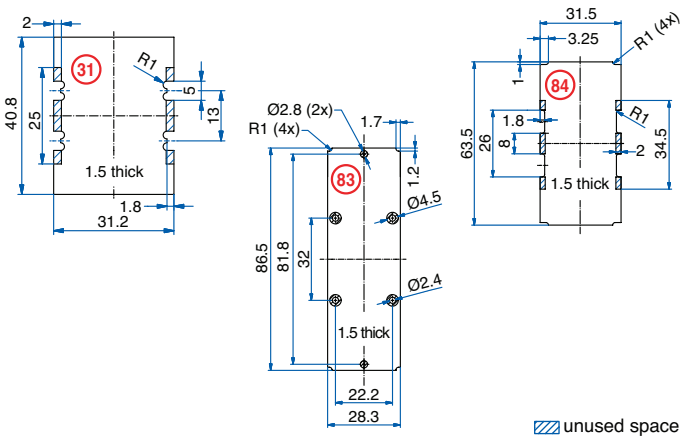


## 20 Terminal

### Fixed PCB Blocks

### TECHNICAL INFORMATION

**Electrical:**
12A, 250V, 24-12 AWG

**Housing Material:**
Glass-filled Polycarbonate

**Temperature Range:**
Up to 115°C (239°F)

**Flammability Rating:**
UL94 V-O

**Color:**
Light Gray Cover, Black Base and Terminals

**Terminal Type:**
Screw / Rising Clamp

**Terminal Screw Size:**
M2.5

**Recommended Torque:**
0.4Nm

**PCB Locations:**
(2) Vertical, Parallel

**Mounting:**
35mm DIN Rail

### ORDERING INFORMATION

| Part Number | Type | Description | PCB Connection |
|---|---|---|---|
| 91.811 | KU4188F | Fixed PCB Terminal | Machine Solder |

### ACCESSORIES

| Accessories | Part Number | Type |
|---|---|---|
| 1 Meter DIN Rail | 2511120/1M | TS35x7.5/1M |
| Terminal Cover (12 pole) | 91.801.1 | TCS/12 |

### ENCLOSURE DRAWING (To convert to inches divide by 25.4.)

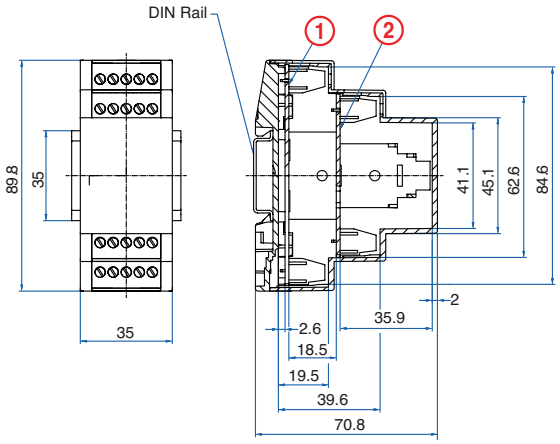


### PCB DRAWING (To convert to inches divide by 25.4.)

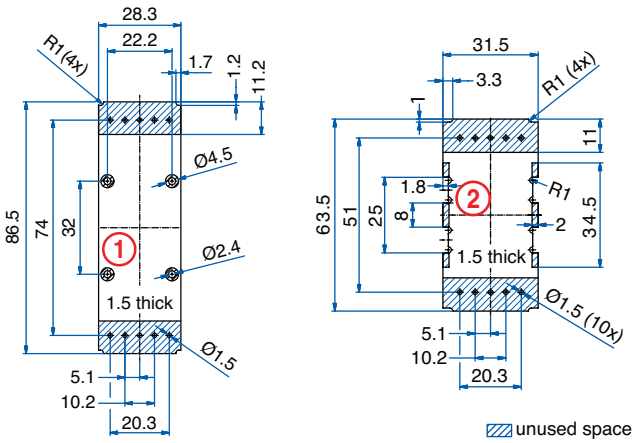

## 20 Terminal

### Pluggable PCB Plugs / Headers

### TECHNICAL INFORMATION

**Electrical:**
12A, 250V, 28-14 AWG

**Housing Material:**
Glass-filled Polycarbonate

**Temperature Range:**
Up to 115°C (239°F)

**Flammability Rating:**
UL94 V-O

**Color:**
Light Gray Cover, Black Base and Terminals

**Terminal Type:**
Screw / Rising Clamp

**Terminal Screw Size:**
M2.5

**Recommended Torque:**
0.4Nm

**PCB Locations:**
(2) Vertical, Parallel

**Mounting:**
35mm DIN Rail

### ORDERING INFORMATION

| Part Number | Type | Description | PCB Connection |
|---|---|---|---|
| 91.812 | KU4188P | Pluggable PCB Terminals | Machine Solder |

### ACCESSORIES

| Accessories | Part Number | Type |
|---|---|---|
| 1 Meter DIN Rail | 2511120/1M | TS35x7.5/1M |

### ENCLOSURE DRAWING (To convert to inches divide by 25.4.)

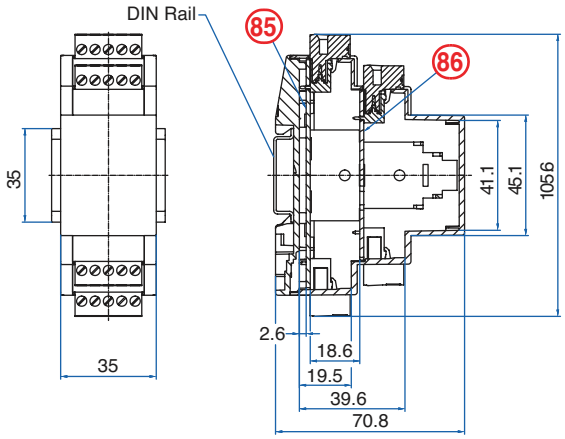


### PCB DRAWING (To convert to inches divide by 25.4.)

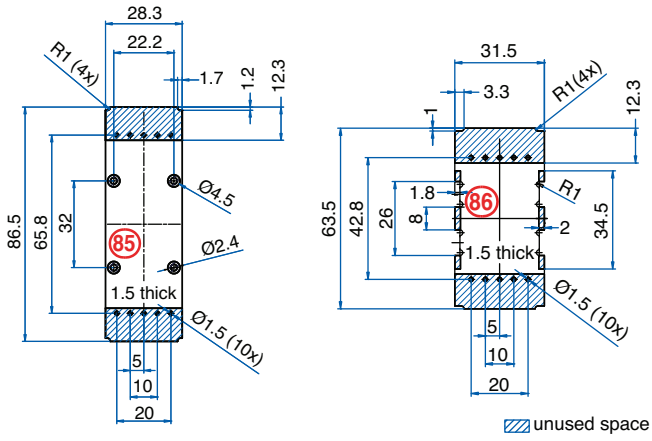


## 16 Terminal

### High Current PCB Blocks

### TECHNICAL INFORMATION

**Electrical:**
40A, 250V, 20-8 AWG

**Housing Material:**
Glass-filled Polycarbonate

**Temperature Range:**
Up to 115°C (239°F)

**Flammability Rating:**
UL94 V-O

**Color:**
Light Gray Cover, Black Base

**Terminal Type:**
Screw / Rising Clamp

**Terminal Screw Size:**
M3.5

**Recommended Torque:**
1.2Nm

**PCB Locations:**
(2) Vertical, Perpendicular

**Mounting:**
35mm DIN Rail

### ORDERING INFORMATION

| Part Number | Type | Description | PCB Connection |
|---|---|---|---|
| 91.813 | KU4188HC | High Current Terminals | Machine Solder |

### ACCESSORIES

| Accessories | Part Number | Type |
|---|---|---|
| 1 Meter DIN Rail | 2511120/1M | TS35x7.5/1M |

### ENCLOSURE DRAWING (To convert to inches divide by 25.4.)

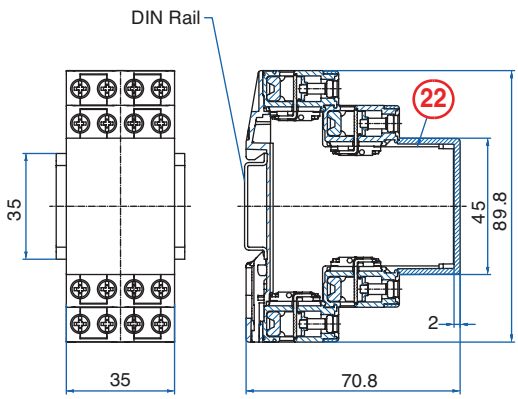


### PCB DRAWING (To convert to inches divide by 25.4.)

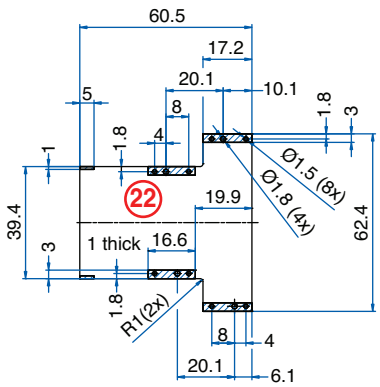

## 52.5mm Enclosure

### Without Terminals

### TECHNICAL INFORMATION

**Electrical:**
–

**Housing Material:**
Glass-filled Polycarbonate

**Temperature Range:**
Up to 115°C (239°F)

**Flammability Rating:**
UL94 V-O

**Color:**
Light Gray Cover, Black Base

**Terminal Type:**
–

**Terminal Screw Size:**
–

**Recommended Torque:**
–

**PCB Locations:**
(3) Vertical, Parallel

**Mounting:**
35mm DIN Rail

### ORDERING INFORMATION

| Part Number | Type | Description | PCB Connection |
|---|---|---|---|
| 91.820 | KU4184B | Without Terminals | None |

### ACCESSORIES

| Accessories | Part Number | Type |
|---|---|---|
| 1 Meter DIN Rail | 2511120/1M | TS35x7.5/1M |

### ENCLOSURE DRAWING (To convert to inches divide by 25.4.)

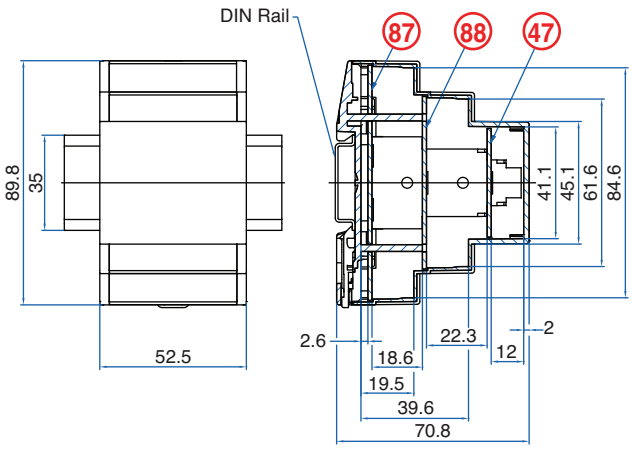


### PCB DRAWING (To convert to inches divide by 25.4.)

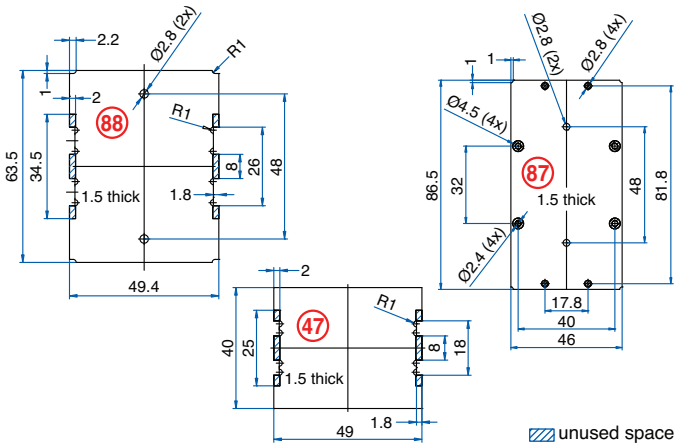


## 36 Terminal

### Fixed PCB Blocks

### TECHNICAL INFORMATION

**Electrical:**
12A, 250V, 24-12 AWG

**Housing Material:**
Glass-filled Polycarbonate

**Temperature Range:**
Up to 115°C (239°F)

**Flammability Rating:**
UL94 V-O

**Color:**
Light Gray Cover, Black Base and Terminals

**Terminal Type:**
Screw / Rising Clamp

**Terminal Screw Size:**
M2.5

**Recommended Torque:**
0.4Nm

**PCB Locations:**
(2) Vertical, Parallel

**Mounting:**
35mm DIN Rail

### ORDERING INFORMATION

| Part Number | Type | Description | PCB Connection |
|---|---|---|---|
| 91.821 | KU4184F | Fixed PCB Terminals | Machine Solder |

### ACCESSORIES

| Accessories | Part Number | Type |
|---|---|---|
| 1 Meter DIN Rail | 2511120/1M | TS35x7.5/1M |
| Terminal Cover (12 pole) | 91.801.1 | TCS/12 |

### ENCLOSURE DRAWING (To convert to inches divide by 25.4.)

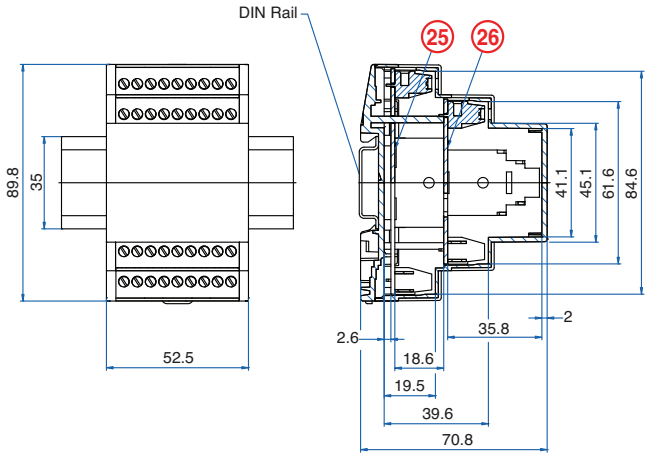


### PCB DRAWING (To convert to inches divide by 25.4.)

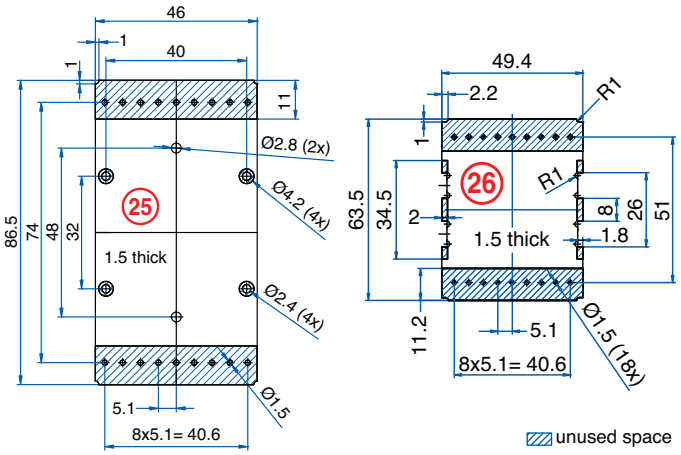

## 36 Terminal

### Pluggable PCB Plugs / Headers

### TECHNICAL INFORMATION

**Electrical:**
12A, 250V, 28-14 AWG

**Housing Material:**
Glass-filled Polycarbonate

**Temperature Range:**
Up to 115°C (239°F)

**Flammability Rating:**
UL94 V-O

**Color:**
Light Gray Cover, Black Base and Terminals

**Terminal Type:**
Screw / Rising Clamp

**Terminal Screw Size:**
M2.5

**Recommended Torque:**
0.4Nm

**PCB Locations:**
(2) Vertical, Parallel

**Mounting:**
35mm DIN Rail

### ORDERING INFORMATION

| Part Number | Type | Description | PCB Connection |
|---|---|---|---|
| 91.822 | KU4184P | Pluggable PCB Terminals | Machine Solder |

### ACCESSORIES

| Accessories | Part Number | Type |
|---|---|---|
| 1 Meter DIN Rail | 2511120/1M | TS35x7.5/1M |

### ENCLOSURE DRAWING (To convert to inches divide by 25.4.)

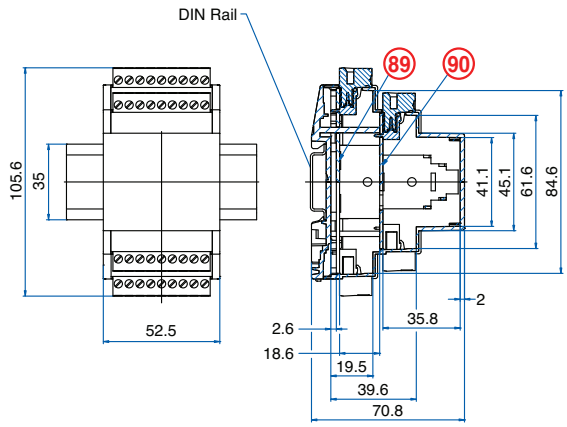


### PCB DRAWING (To convert to inches divide by 25.4.)

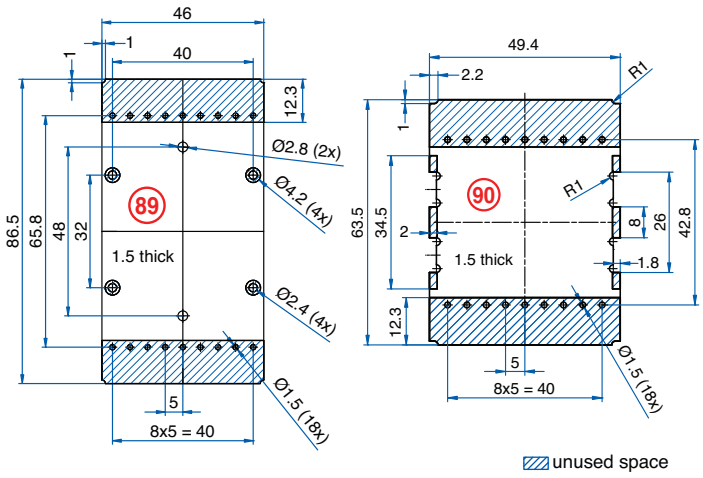


## 70mm Enclosure

### Without Terminals

### TECHNICAL INFORMATION

**Electrical:**
–

**Housing Material:**
Glass-filled Polycarbonate

**Temperature Range:**
Up to 115°C (239°F)

**Flammability Rating:**
UL94 V-O

**Color:**
Light Gray Cover, Black Base

**Terminal Type:**
–

**Terminal Screw Size:**
–

**Recommended Torque:**
–

**PCB Locations:**
(3) Vertical, Parallel

**Mounting:**
35mm DIN Rail

### ORDERING INFORMATION

| Part Number | Type | Description | PCB Connection |
|---|---|---|---|
| 91.830 | KU4189B | Without Terminals | None |

### ACCESSORIES

| Accessories | Part Number | Type |
|---|---|---|
| 1 Meter DIN Rail | 2511120/1M | TS35x7.5/1M |

### ENCLOSURE DRAWING (To convert to inches divide by 25.4.)

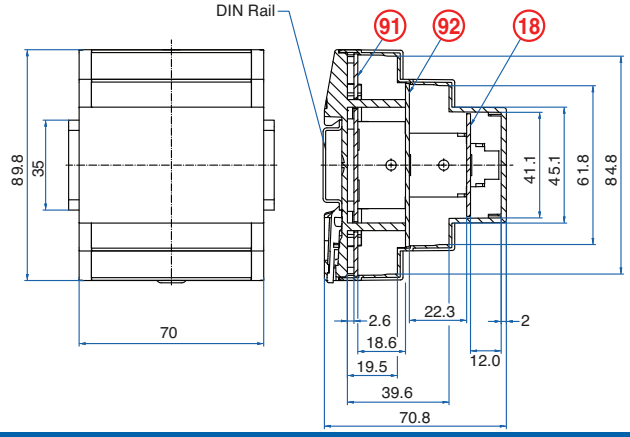


### PCB DRAWING (To convert to inches divide by 25.4.)

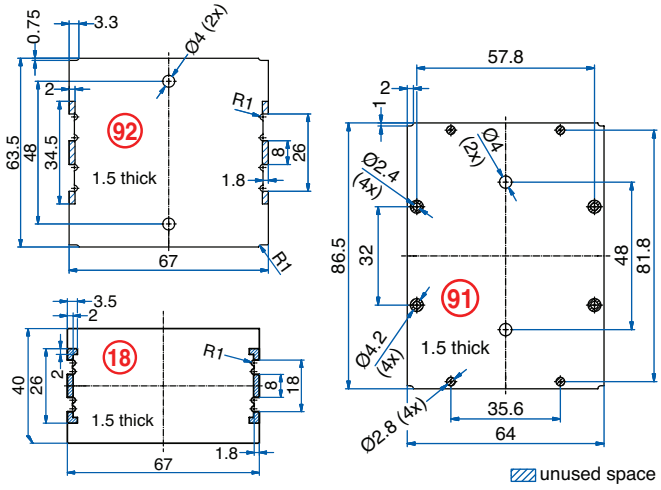

## 48 Terminal

### Fixed PCB Blocks

### TECHNICAL INFORMATION

**Electrical:**
12A, 250V, 24-12 AWG

**Housing Material:**
Glass-filled Polycarbonate

**Temperature Range:**
Up to 115°C (239°F)

**Flammability Rating:**
UL94 V-O

**Color:**
Light Gray Cover, Black Base and Terminals

**Terminal Type:**
Screw / Rising Clamp

**Terminal Screw Size:**
M2.5

**Recommended Torque:**
0.4Nm

**PCB Locations:**
(2) Vertical, Parallel

**Mounting:**
35mm DIN Rail

### ORDERING INFORMATION

| Part Number | Type | Description | PCB Connection |
|---|---|---|---|
| 91.831 | KU4189F | Fixed PCB Terminals | Machine Solder |

### ACCESSORIES

| Accessories | Part Number | Type |
|---|---|---|
| 1 Meter DIN Rail | 2511120/1M | TS35x7.5/1M |
| Terminal Cover (12 pole) | 91.801.1 | TCS/12 |

### ENCLOSURE DRAWING (To convert to inches divide by 25.4.)

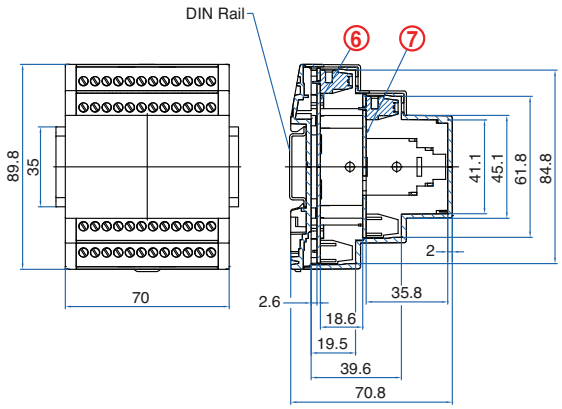


### PCB DRAWING (To convert to inches divide by 25.4.)

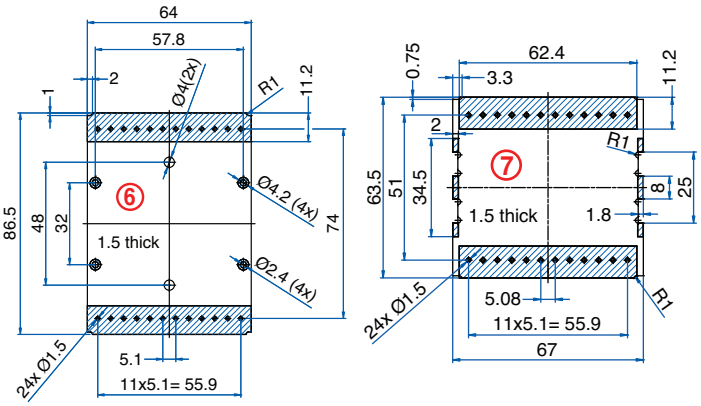


unused space

## 48 Terminal

### Pluggable PCB Plugs / Headers

### TECHNICAL INFORMATION

**Electrical:**
12A, 250V, 28-14 AWG

**Housing Material:**
Glass-filled Polycarbonate

**Temperature Range:**
Up to 115°C (239°F)

**Flammability Rating:**
UL94 V-O

**Color:**
Light Gray Cover, Black Base and Terminals

**Terminal Type:**
Screw / Rising Clamp

**Terminal Screw Size:**
M2.5

**Recommended Torque:**
0.4Nm

**PCB Locations:**
(2) Vertical, Parallel

**Mounting:**
35mm DIN Rail

### ORDERING INFORMATION

| Part Number | Type | Description | PCB Connection |
|---|---|---|---|
| 91.832 | KU4189P | Pluggable PCB Terminals | Machine Solder |

### ACCESSORIES

| Accessories | Part Number | Type |
|---|---|---|
| 1 Meter DIN Rail | 2511120/1M | TS35x7.5/1M |

### ENCLOSURE DRAWING (To convert to inches divide by 25.4.)

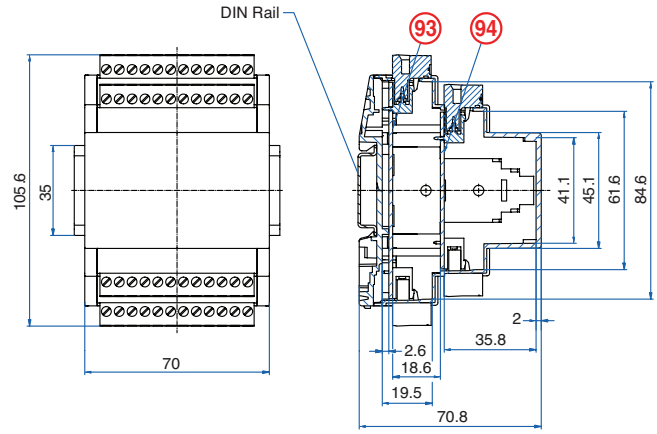


### PCB DRAWING (To convert to inches divide by 25.4.)

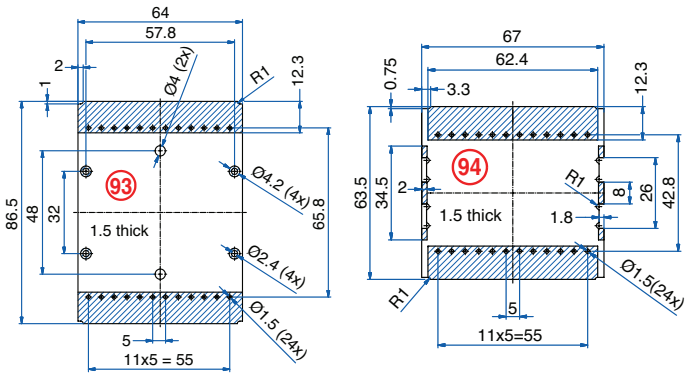


unused space

## 105mm Enclosure

### Without Terminals

### TECHNICAL INFORMATION

**Electrical:**
–

**Housing Material:**
Glass-filled Polycarbonate

**Temperature Range:**
Up to 115°C (239°F)

**Flammability Rating:**
UL94 V-O

**Color:**
Light Gray Cover, Black Base

**Terminal Type:**
–

**Terminal Screw Size:**
–

**Recommended Torque:**
–

**PCB Locations:**
(3) Vertical, Parallel

**Mounting:**
35mm DIN Rail

### ORDERING INFORMATION

| Part Number | Type | Description | PCB Connection |
|---|---|---|---|
| 91.840 | KU4190B | Without Terminals | None |

### ACCESSORIES

| Accessories | Part Number | Type |
|---|---|---|
| 1 Meter DIN Rail | 2511120/1M | TS35x7.5/1M |

### ENCLOSURE DRAWING (To convert to inches divide by 25.4.)

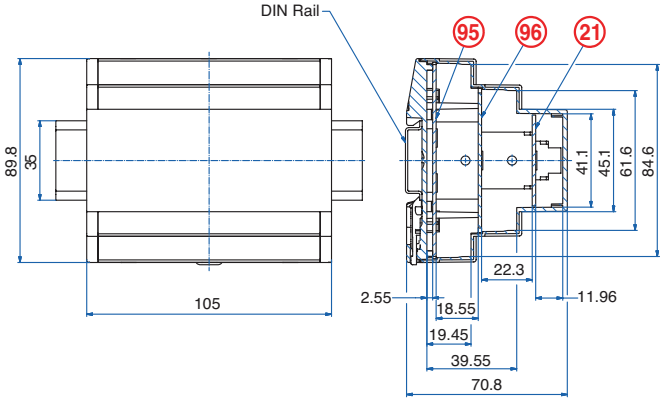


### PCB DRAWING (To convert to inches divide by 25.4.)

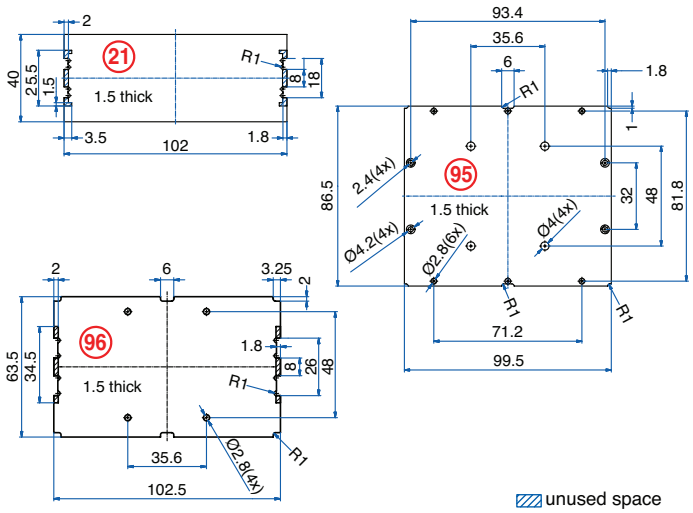


## 72 Terminal

### Fixed PCB Blocks

### TECHNICAL INFORMATION

**Electrical:**
12A, 250V, 24-12 AWG

**Housing Material:**
Glass-filled Polycarbonate

**Temperature Range:**
Up to 115°C (239°F)

**Flammability Rating:**
UL94 V-O

**Color:**
Light Gray Cover, Black Base and Terminals

**Terminal Type:**
Screw / Rising Clamp

**Terminal Screw Size:**
M2.5

**Recommended Torque:**
0.4Nm

**PCB Locations:**
(2) Vertical, Parallel

**Mounting:**
35mm DIN Rail

### ORDERING INFORMATION

| Part Number | Type | Description | PCB Connection |
|---|---|---|---|
| 91.841 | KU4190F | Fixed PCB Terminals | Machine Solder |

### ACCESSORIES

| Accessories | Part Number | Type |
|---|---|---|
| 1 Meter DIN Rail | 2511120/1M | TS35x7.5/1M |
| Terminal Cover (12 pole) | 91.801.1 | TCS/12 |

### ENCLOSURE DRAWING (To convert to inches divide by 25.4.)

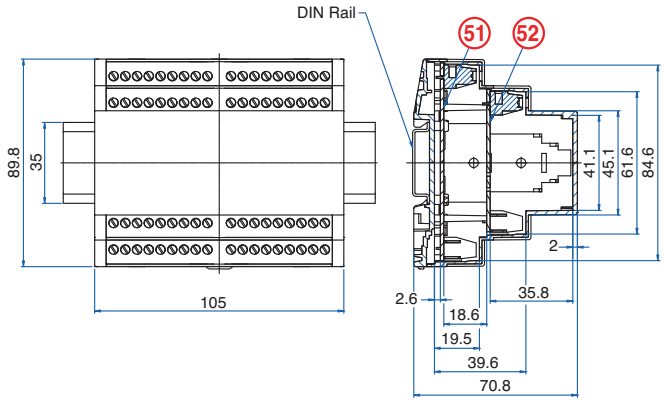


### PCB DRAWING (To convert to inches divide by 25.4.)

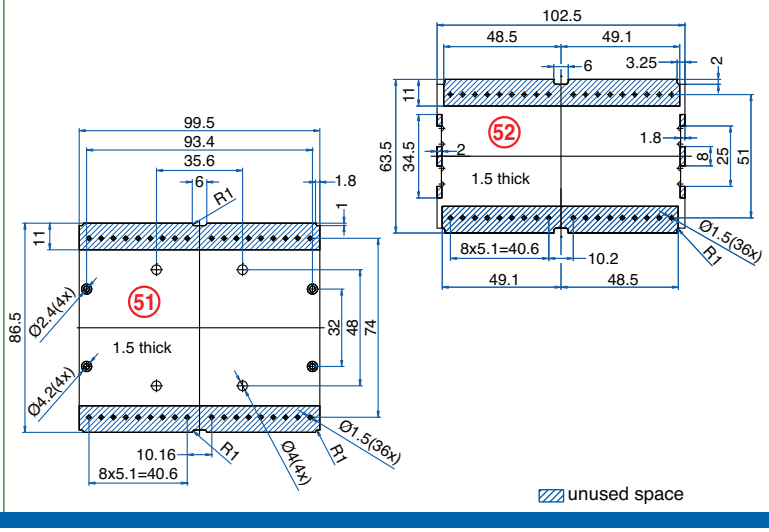

## 72 Terminal

### Pluggable PCB Plugs / Headers

### TECHNICAL INFORMATION

**Electrical:**
12A, 250V, 28-14 AWG

**Housing Material:**
Glass-filled Polycarbonate

**Temperature Range:**
Up to 115°C (239°F)

**Flammability Rating:**
UL94 V-O

**Color:**
Light Gray Cover, Black Base and Terminals

**Terminal Type:**
Screw / Rising Clamp

**Terminal Screw Size:**
M2.5

**Recommended Torque:**
0.4Nm

**PCB Locations:**
(2) Vertical, Parallel

**Mounting:**
35mm DIN Rail

### ORDERING INFORMATION

| Part Number | Type | Description | PCB Connection |
|---|---|---|---|
| 91.842 | KU4190P | Pluggable PCB Terminals | Machine Solder |

### ACCESSORIES

| Accessories | Part Number | Type |
|---|---|---|
| 1 Meter DIN Rail | 2511120/1M | TS35x7.5/1M |

### ENCLOSURE DRAWING (To convert to inches divide by 25.4.)

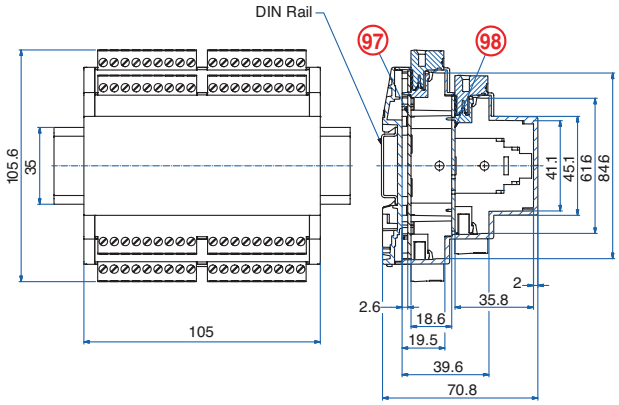


### PCB DRAWING (To convert to inches divide by 25.4.)

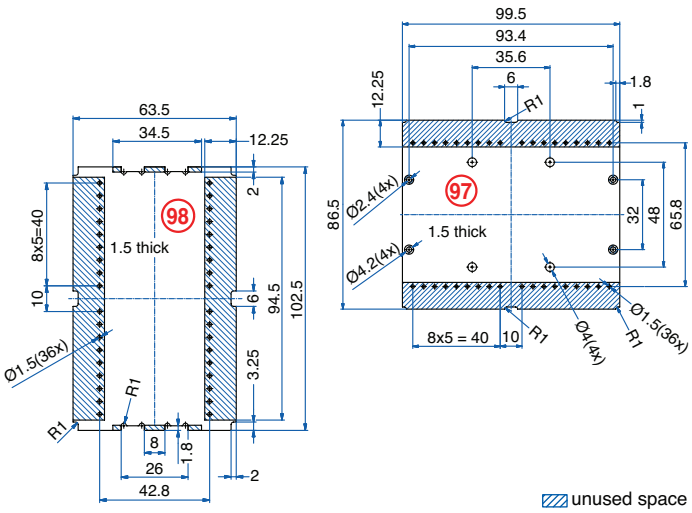


## 140mm Enclosure

### Without Terminals

### TECHNICAL INFORMATION

**Electrical:**
–

**Housing Material:**
Glass-filled Polycarbonate

**Temperature Range:**
Up to 115°C (239°F)

**Flammability Rating:**
UL94 V-O

**Color:**
Light Gray Cover, Black Base

**Terminal Type:**
–

**Terminal Screw Size:**
–

**Recommended Torque:**
–

**PCB Locations:**
(3) Vertical, Pararllel

**Mounting:**
35mm DIN Rail

### ORDERING INFORMATION

| Part Number | Type | Description | PCB Connection |
|---|---|---|---|
| 91.850 | KU4191B | Without Terminals | None |

### ACCESSORIES

| Accessories | Part Number | Type |
|---|---|---|
| 1 Meter DIN Rail | 2511120/1M | TS35x7.5/1M |

### ENCLOSURE DRAWING (To convert to inches divide by 25.4.)

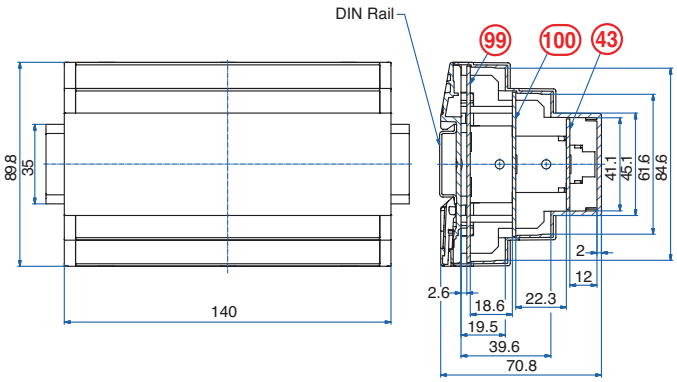


### PCB DRAWING (To convert to inches divide by 25.4.)

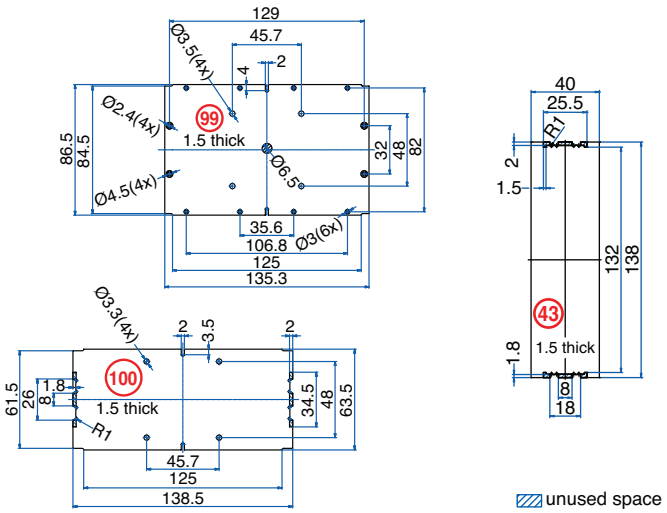

## 96 Terminal

### Fixed PCB Blocks

### TECHNICAL INFORMATION

**Electrical:**
12A, 250V, 24-12 AWG

**Housing Material:**
Glass-filled Polycarbonate

**Temperature Range:**
Up to 115°C (239°F)

**Flammability Rating:**
UL94 V-O

**Color:**
Light Gray Cover, Black Base and Terminals

**Terminal Type:**
Screw / Rising Clamp

**Terminal Screw Size:**
M2.5

**Recommended Torque:**
0.4Nm

**PCB Locations:**
(2) Vertical, Parallel

**Mounting:**
35mm DIN Rail

### ORDERING INFORMATION

| Part Number | Type | Description | PCB Connection |
|---|---|---|---|
| 91.851 | KU4191F | Fixed PCB Terminals | Machine Solder |

### ACCESSORIES

| Accessories | Part Number | Type |
|---|---|---|
| 1 Meter DIN Rail | 2511120/1M | TS35x7.5/1M |
| Terminal Cover (12 pole) | 91.801.1 | TCS/12 |

### ENCLOSURE DRAWING (To convert to inches divide by 25.4.)

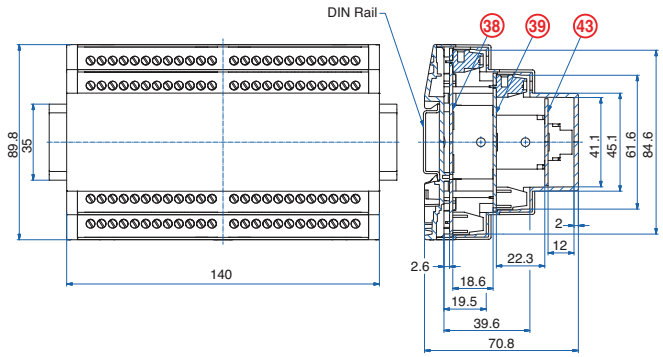


### PCB DRAWING (To convert to inches divide by 25.4.)

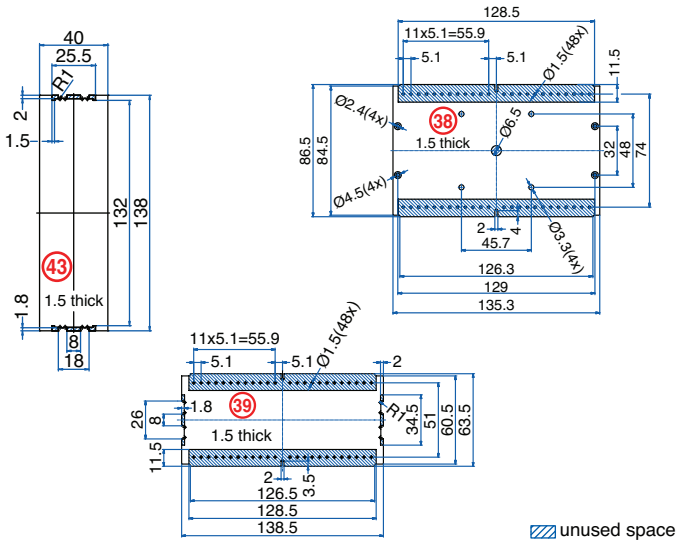


## 96 Terminal

### Pluggable PCB Plugs / Headers

### TECHNICAL INFORMATION

**Electrical:**
12A, 250V, 28-14 AWG

**Housing Material:**
Glass-filled Polycarbonate

**Temperature Range:**
Up to 115°C (239°F)

**Flammability Rating:**
UL94 V-O

**Color:**
Light Gray Cover, Black Base and Terminals

**Terminal Type:**
Screw / Rising Clamp

**Terminal Screw Size:**
M2.5

**Recommended Torque:**
0.4Nm

**PCB Locations:**
(2) Vertical, Parallel

**Mounting:**
35mm DIN Rail

### ORDERING INFORMATION

| Part Number | Type | Description | PCB Connection |
|---|---|---|---|
| 91.852 | KU4191P | Pluggable PCB Terminals | Machine Solder |

### ACCESSORIES

| Accessories | Part Number | Type |
|---|---|---|
| 1 Meter DIN Rail | 2511120/1M | TS35x7.5/1M |

### ENCLOSURE DRAWING (To convert to inches divide by 25.4.)

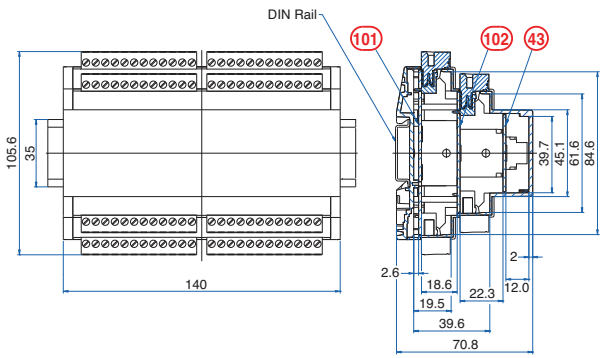


### PCB DRAWING (To convert to inches divide by 25.4.)

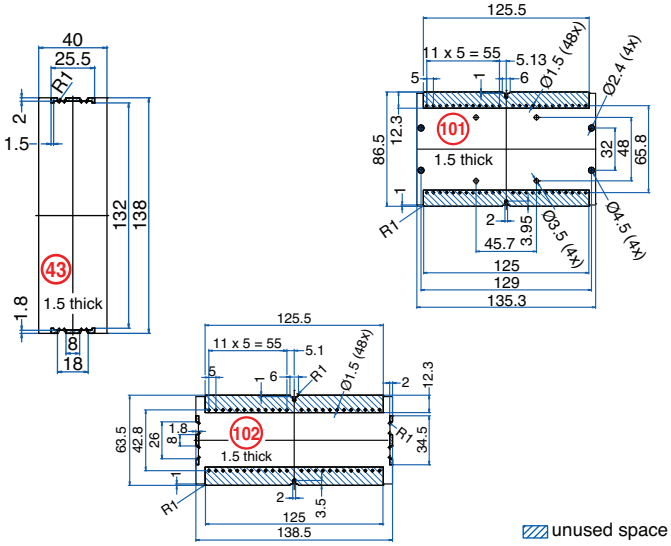

# KO4300 Series

**The KO4300 Series Enclosures** feature high density double level terminals making them ideal for many electronic applications. They are small to medium in size ranging from 16 to 64 terminals. There are 4 widths available each having a short and tall version. Terminal styles are available in fixed scew terminals, pluggable screw terminals or pluggable spring clamp terminals.

### MATERIALS

Housing Shell: Polycarbonate, 10% Glass Filled
Terminal Housing: Polyamide, 40% Glass Filled
Terminal: Tin-plated Steel (spring terminal: stainless steel)
Standard Color: Light Gray

### TEMPERATURE RATINGS:

Terminal Housing: 290°C (554°F) UL94VO
Housing: 115°C (239°F) UL94VO

### PROTECTION

KO4300 series enclosures have an IP20 rating (finger protected) and meet VBG4 and other European accident prevention requirements.

### CONSTRUCTION

The KO4300 enclosure series housings are supplied as unassembled kits. Each kit consists of a housing base, terminal cover side parts, terminal blocks and a front plate. The double level terminal design keeps the enclosure width to a minimum freeing valuable DIN rail space. The terminals are machine solderable with right angle pins. Integral printed circuit board guides are molded into the housing base to help with proper board insertion and containment. Boards are mounted vertically in the enclosure, perpendicular to the DIN rail.

### TERMINALS

Rising clamp screw terminals are used with the KO4300 series enclosures. Wires to be terminated are squeezed between the bottom of the rising clamp and the terminal strip for reliable, gas-tight connections. The terminals can be machine soldered to the board in the same step as the other components to save time and labor. All terminals have funnel shaped wire openings to eliminate wire fraying. The terminal screws can be turned with a flat tip or a #2 Philips screwdriver.

Pluggable screw clamp and spring clamp terminals are also available. A 3mm wide flat blade screwdriver should be used to open the spring terminal for wire insertion.

### MOUNTING

The KO4300 series can easily be mounted on standard 35mm DIN rail by means of the integral mounting foot and DIN clip.

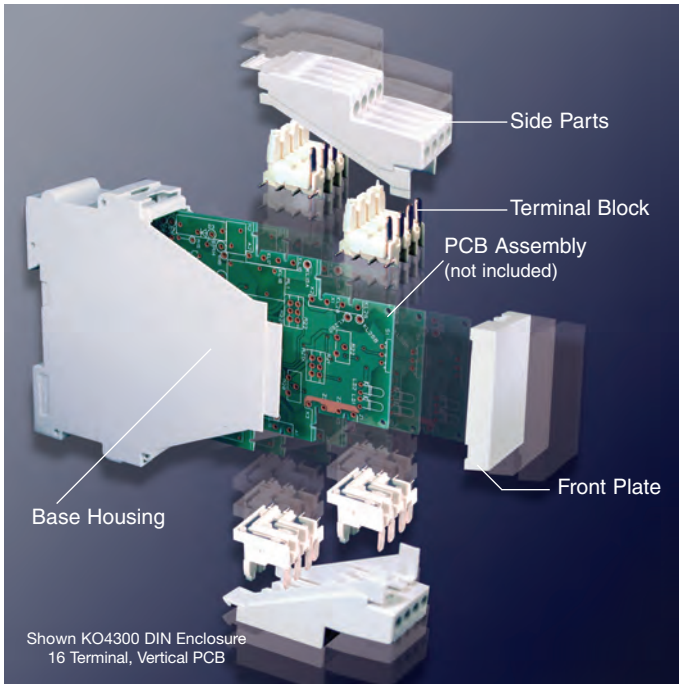


Shown KO4300 DIN Enclosure
16 Terminal, Vertical PCB

### CUSTOMIZATION

Many custom options are available for the KO4300 series enclosures. Some of the available options are:

- Partial terminal loading
- Side ventilation slots
- Internal/External bus connections
- Machining of custom holes
- PCB grounding to the DIN rail
- RJ45 and DB9 openings in front plate

### HOUSING ASSEMBLY

- Place all assemblies on a level surface
- Terminal blocks should be pre-assembled on the PCB
- Push the side parts over the terminal blocks ensuring that the guide pins of the terminal blocks slide into the holes of the side parts
- Snap the front plate onto the pre-mounted side parts
- Slide the PCB of the upper section into the guide groves of the base
- Slide the upper section into the base. Make sure that the wall areas overlap correctly and the guide element of the base slides in the mating recess of the base.
- Push the assembly completely together so that the clips on the side parts snap into the recesses in the base

## 16 Terminal
### Vertical PCB

Pluggable Screw Terminals

Pluggable Spring Terminals

Fixed Screw Terminals

### TECHNICAL INFORMATION

**Electrical:**
16A, 300V, 22-12 AWG

**Housing Material:**
Glass-filled Polycarbonate

**Terminal Block Material:**
Glass-filled Polyamide

**Temperature Range:**
Up to 115°C (239°F), Housing
290°C (554°F), Terminals

**Flammability Rating:**
UL94 V-O

**Color:** Light Gray

**Terminal Type:**
Screw / Rising Clamp

**Terminal Screw Size:**
M3.5

**Recommended Torque:**
0.8Nm

**Max. PCB's:**
(2) Vertical

**Mounting:**
35mm DIN Rail

### ORDERING INFORMATION

| Part Number | Type | Terminals | PCB Connection |
|---|---|---|---|
| 90.900 | KO4323 | Fixed Screw | Machine Solder |
| 90.903 | KO4323stS | Pluggable Screw | Machine Solder |
| 90.905 | KO4323stK | Pluggable Spring | Machine Solder |

### ACCESSORIES

| Accessories | Part Number | Type |
|---|---|---|
| 1 Meter DIN Rail | 2511120/1M | TS35x7.5/1M |

### ENCLOSURE DRAWING (To convert to inches divide by 25.4.)

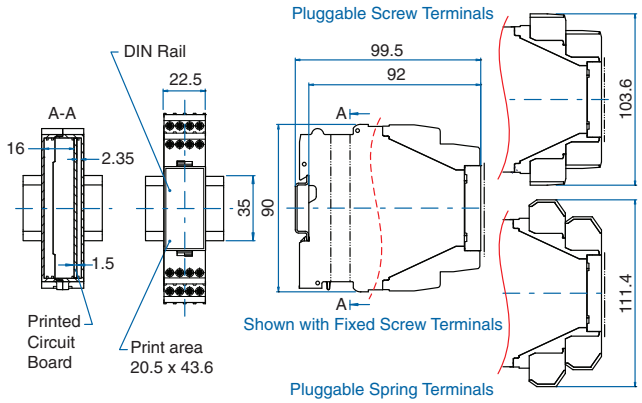


### PCB DRAWING (To convert to inches divide by 25.4.)

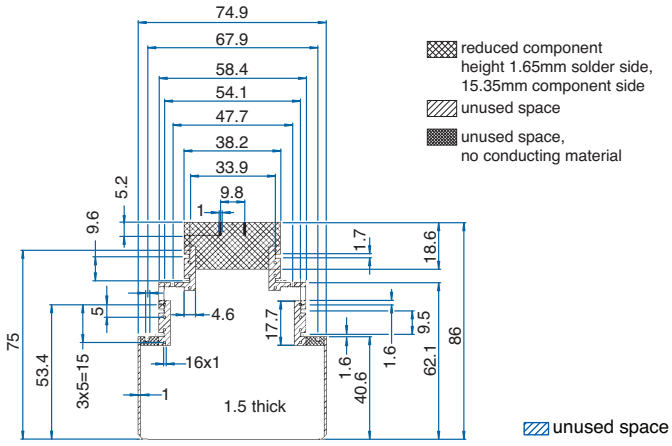


## 16 Terminal
### Tall Vertical PCB

Pluggable Screw Terminals

Pluggable Spring Terminals

Fixed Screw Terminals

### TECHNICAL INFORMATION

**Electrical:**
16A, 300V, 22-12 AWG

**Housing Material:**
Glass-filled Polycarbonate

**Terminal Block Material:**
Glass-filled Polyamide

**Temperature Range:**
Up to 115°C (239°F), Housing
290°C (554°F), Terminals

**Flammability Rating:**
UL94 V-O

**Color:** Light Gray

**Terminal Type:**
Screw / Rising Clamp

**Terminal Screw Size:**
M3.5

**Recommended Torque:**
0.8Nm

**Max. PCB's:**
(2) Vertical

**Mounting:**
35mm DIN Rail

### ORDERING INFORMATION

| Part Number | Type | Terminals | PCB Connection |
|---|---|---|---|
| 90.910 | KO4303 | Fixed Screw | Machine Solder |
| 90.913 | KO4303stS | Pluggable Screw | Machine Solder |
| 90.915 | KO4303stK | Pluggable Spring | Machine Solder |

### ACCESSORIES

| Accessories | Part Number | Type |
|---|---|---|
| 1 Meter DIN Rail | 2511120/1M | TS35x7.5/1M |

### ENCLOSURE DRAWING (To convert to inches divide by 25.4.)

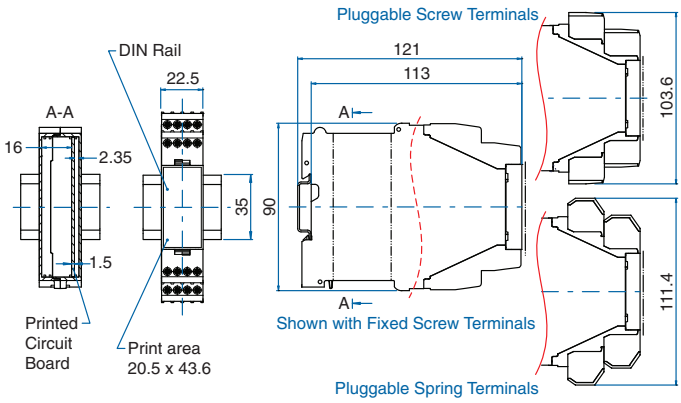


### PCB DRAWING (To convert to inches divide by 25.4.)

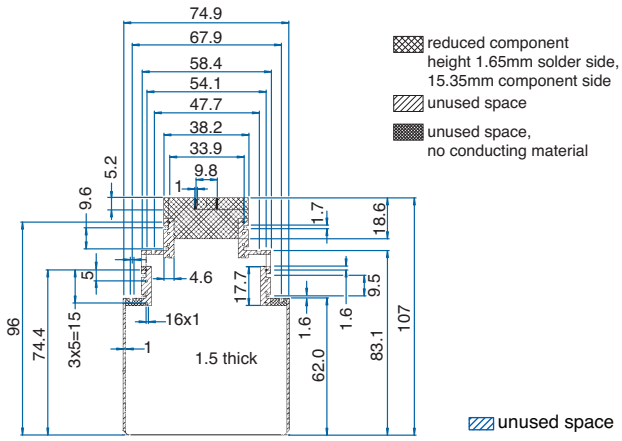

## 32 Terminal
### Vertical PCB

### TECHNICAL INFORMATION

**Electrical:**
16A, 300V, 22-12 AWG
**Housing Material:**
Glass-filled Polycarbonate
**Terminal Block Material:**
Glass-filled Polyamide
**Temperature Range:**
Up to 115°C (239°F), Housing 290°C (554°F), Terminals
**Flammability Rating:**
UL94 V-O
**Color:** Light Gray

**Terminal Type:**
Screw / Rising Clamp
**Terminal Screw Size:**
M3.5
**Recommended Torque:**
0.8Nm
**Max. PCB's:**
(4) Vertical
**Mounting:**
35mm DIN Rail

### ORDERING INFORMATION

| Part Number | Type | Terminals | PCB Connection |
|---|---|---|---|
| 90.920 | KO4324 | Fixed Screw | Machine Solder |
| 90.923 | KO4324stS | Pluggable Screw | Machine Solder |
| 90.925 | KO4324stK | Pluggable Spring | Machine Solder |

### ACCESSORIES

| Accessories | Part Number | Type |
|---|---|---|
| 1 Meter DIN Rail | 2511120/1M | TS35x7.5/1M |

### ENCLOSURE DRAWING (To convert to inches divide by 25.4.)

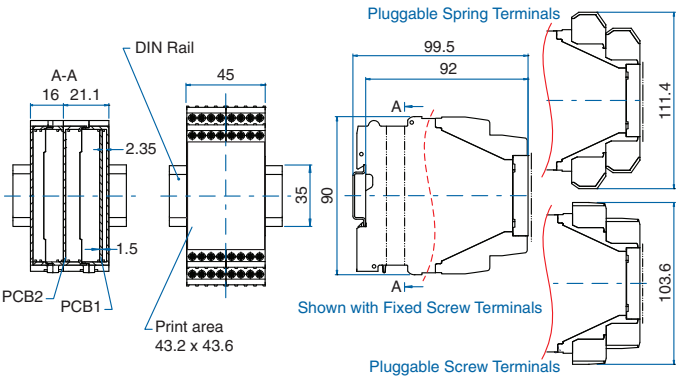


### PCB DRAWING (To convert to inches divide by 25.4.)

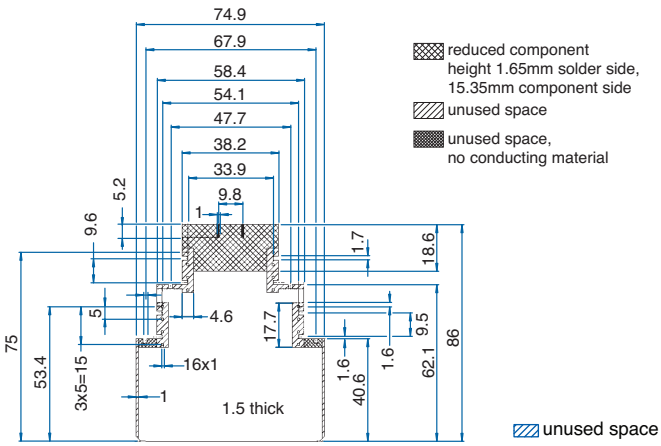


## 32 Terminal
### Tall Vertical PCB

### TECHNICAL INFORMATION

**Electrical:**
16A, 300V, 22-12 AWG
**Housing Material:**
Glass-filled Polycarbonate
**Terminal Block Material:**
Glass-filled Polyamide
**Temperature Range:**
Up to 115°C (239°F), Housing 290°C (554°F), Terminals
**Flammability Rating:**
UL94 V-O
**Color:** Light Gray

**Terminal Type:**
Screw / Rising Clamp
**Terminal Screw Size:**
M3.5
**Recommended Torque:**
0.8Nm
**Max. PCB's:**
(4) Vertical
**Mounting:**
35mm DIN Rail

### ORDERING INFORMATION

| Part Number | Type | Terminals | PCB Connection |
|---|---|---|---|
| 90.930 | KO4304 | Fixed Screw | Machine Solder |
| 90.933 | KO4304stS | Pluggable Screw | Machine Solder |
| 90.935 | KO4304stK | Pluggable Spring | Machine Solder |

### ACCESSORIES

| Accessories | Part Number | Type |
|---|---|---|
| 1 Meter DIN Rail | 2511120/1M | TS35x7.5/1M |

### ENCLOSURE DRAWING (To convert to inches divide by 25.4.)

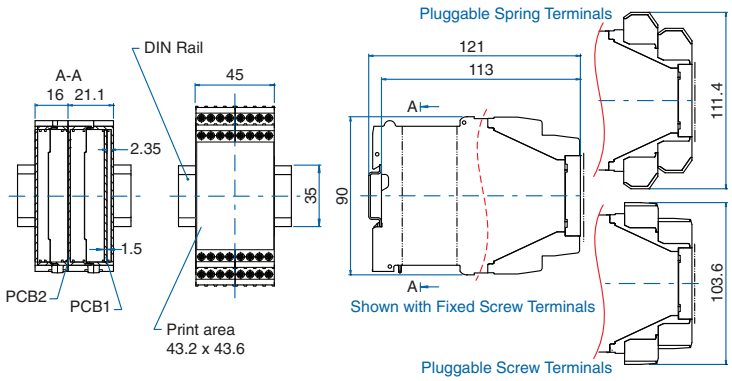


### PCB DRAWING (To convert to inches divide by 25.4.)

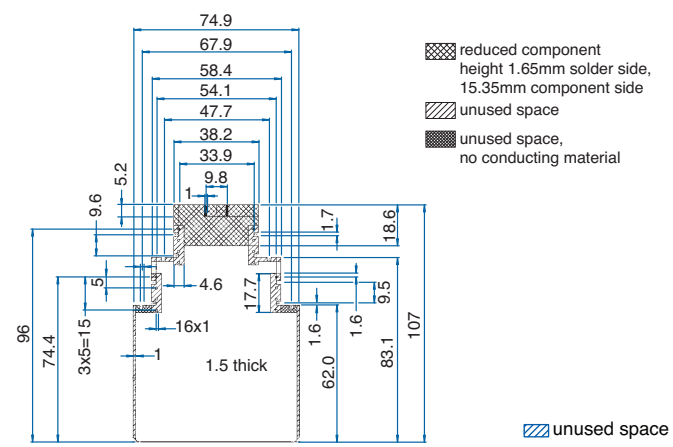

## 48 Terminal
### Vertical PCB

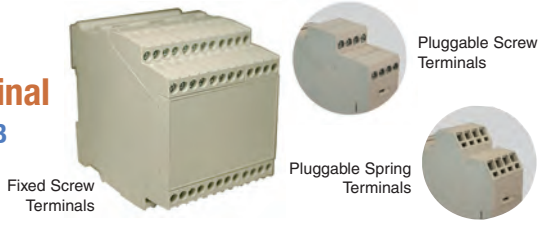


### TECHNICAL INFORMATION

**Electrical:**
16A, 300V, 22-12 AWG
**Housing Material:**
Glass-filled Polycarbonate
**Terminal Block Material:**
Glass-filled Polyamide
**Temperature Range:**
Up to 115°C (239°F), Housing
290°C (554°F), Terminals
**Flammability Rating:**
UL94 V-O
**Color:** Light Gray

**Terminal Type:**
Screw / Rising Clamp
**Terminal Screw Size:**
M3.5
**Recommended Torque:**
0.8Nm
**Max. PCB's:**
(6) Vertical
**Mounting:**
35mm DIN Rail

### ORDERING INFORMATION

| Part Number | Type | Terminals | PCB Connection |
|---|---|---|---|
| 90.940 | KO4325 | Fixed Screw | Machine Solder |
| 90.943 | KO4325stS | Pluggable Screw | Machine Solder |
| 90.945 | KO4325stK | Pluggable Spring | Machine Solder |

### ACCESSORIES

| Accessories | Part Number | Type |
|---|---|---|
| 1 Meter DIN Rail | 2511120/1M | TS35x7.5/1M |

### ENCLOSURE DRAWING (To convert to inches divide by 25.4.)

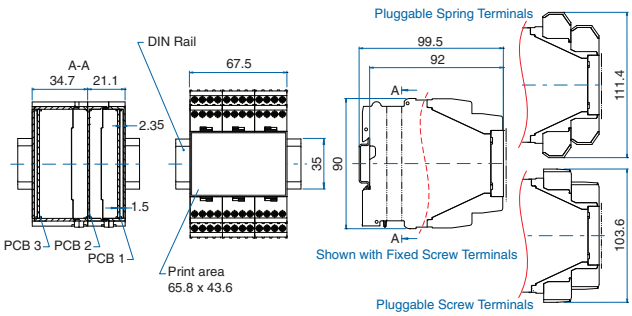


### PCB DRAWING (To convert to inches divide by 25.4.)

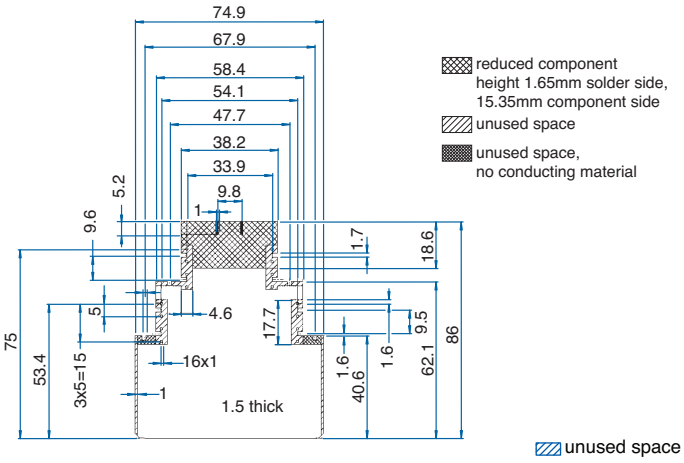


## 48 Terminal
### Tall Vertical PCB

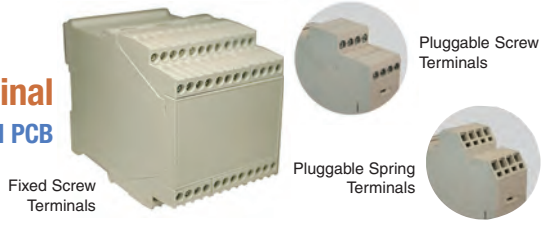


### TECHNICAL INFORMATION

**Electrical:**
16A, 300V, 22-12 AWG
**Housing Material:**
Glass-filled Polycarbonate
**Terminal Block Material:**
Glass-filled Polyamide
**Temperature Range:**
Up to 115°C (239°F), Housing
290°C (554°F), Terminals
**Flammability Rating:**
UL94 V-O
**Color:** Light Gray

**Terminal Type:**
Screw / Rising Clamp
**Terminal Screw Size:**
M3.5
**Recommended Torque:**
0.8Nm
**Max. PCB's:**
(6) Vertical
**Mounting:**
35mm DIN Rail

### ORDERING INFORMATION

| Part Number | Type | Terminals | PCB Connection |
|---|---|---|---|
| 90.950 | KO4305 | Fixed Screw | Machine Solder |
| 90.953 | KO4305stS | Pluggable Screw | Machine Solder |
| 90.955 | KO4305stK | Pluggable Spring | Machine Solder |

### ACCESSORIES

| Accessories | Part Number | Type |
|---|---|---|
| 1 Meter DIN Rail | 2511120/1M | TS35x7.5/1M |

### ENCLOSURE DRAWING (To convert to inches divide by 25.4.)

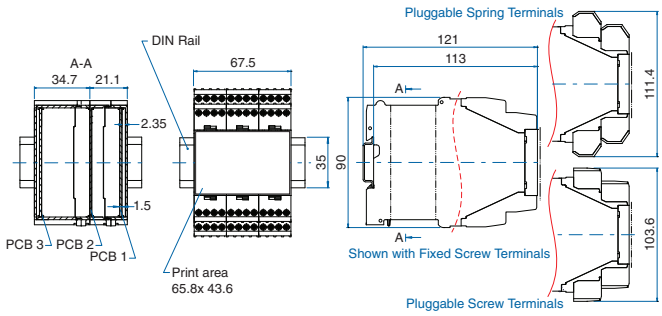


### PCB DRAWING (To convert to inches divide by 25.4.)

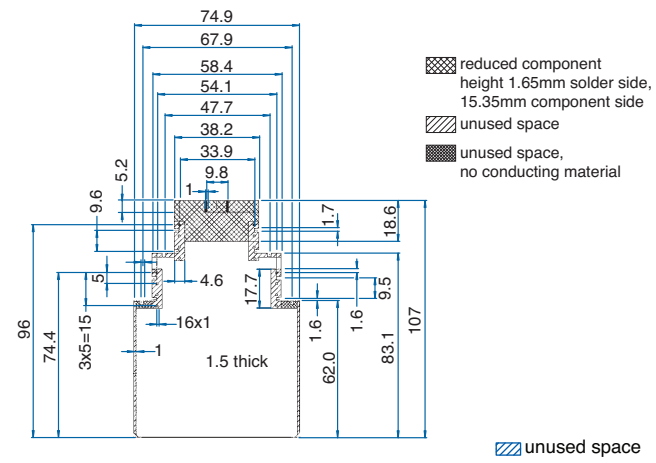

## 64 Terminal
### Vertical PCB

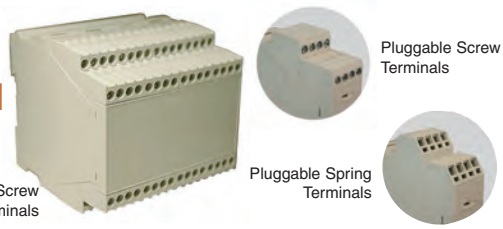


### TECHNICAL INFORMATION

**Electrical:**
16A, 300V, 22-12 AWG
**Housing Material:**
Glass-filled Polycarbonate
**Terminal Block Material:**
Glass-filled Polyamide
**Temperature Range:**
Up to 115°C (239°F), Housing 290°C (554°F), Terminals
**Flammability Rating:**
UL94 V-O
**Color:** Light Gray

**Terminal Type:**
Screw / Rising Clamp
**Terminal Screw Size:**
M3.5
**Recommended Torque:**
0.8Nm
**Max. PCB's:**
(8) Vertical
**Mounting:**
35mm DIN Rail

### ORDERING INFORMATION

| Part Number | Type | Terminals | PCB Connection |
|---|---|---|---|
| 90.960 | KO4326 | Fixed Screw | Machine Solder |
| 90.963 | KO4326stS | Pluggable Screw | Machine Solder |
| 90.965 | KO4326stK | Pluggable Spring | Machine Solder |

### ACCESSORIES

| Accessories | Part Number | Type |
|---|---|---|
| 1 Meter DIN Rail | 2511120/1M | TS35x7.5/1M |

### ENCLOSURE DRAWING (To convert to inches divide by 25.4.)

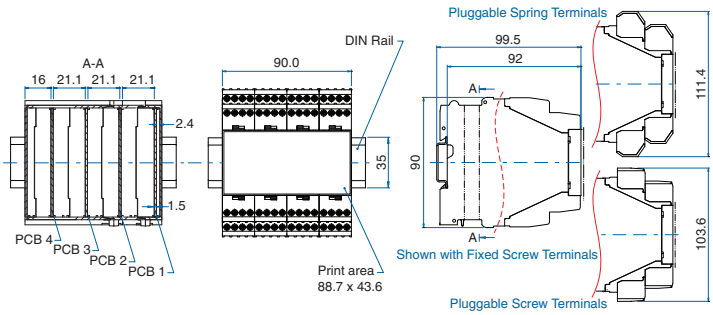


### PCB DRAWING (To convert to inches divide by 25.4.)

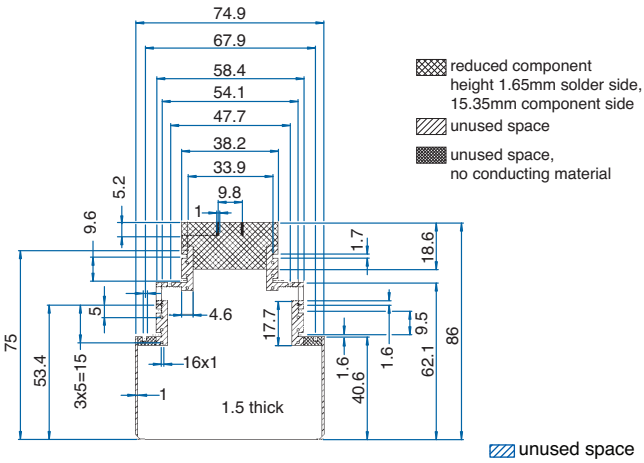


## 64 Terminal
### Tall Vertical PCB

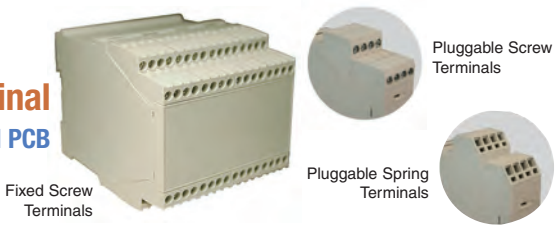


### TECHNICAL INFORMATION

**Electrical:**
16A, 300V, 22-12 AWG
**Housing Material:**
Glass-filled Polycarbonate
**Terminal Block Material:**
Glass-filled Polyamide
**Temperature Range:**
Up to 115°C (239°F), Housing 290°C (554°F), Terminals
**Flammability Rating:**
UL94 V-O
**Color:** Light Gray

**Terminal Type:**
Screw / Rising Clamp
**Terminal Screw Size:**
M3.5
**Recommended Torque:**
0.8Nm
**Max. PCB's:**
(8) Vertical
**Mounting:**
35mm DIN Rail

### ORDERING INFORMATION

| Part Number | Type | Terminals | PCB Connection |
|---|---|---|---|
| 90.970 | KO4306 | Fixed Screw | Machine Solder |
| 90.973 | KO4306stS | Pluggable Screw | Machine Solder |
| 90.975 | KO4306stK | Pluggable Spring | Machine Solder |

### ACCESSORIES

| Accessories | Part Number | Type |
|---|---|---|
| 1 Meter DIN Rail | 2511120/1M | TS35x7.5/1M |

### ENCLOSURE DRAWING (To convert to inches divide by 25.4.)

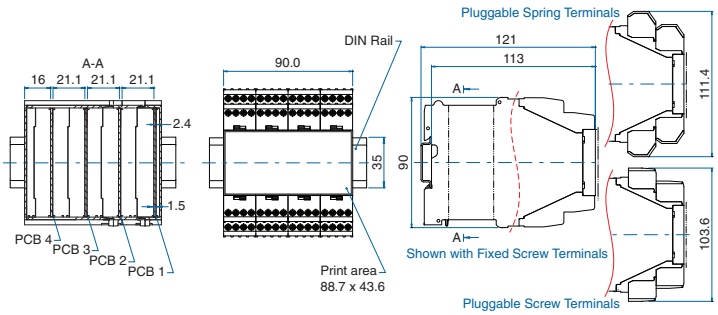


### PCB DRAWING (To convert to inches divide by 25.4.)

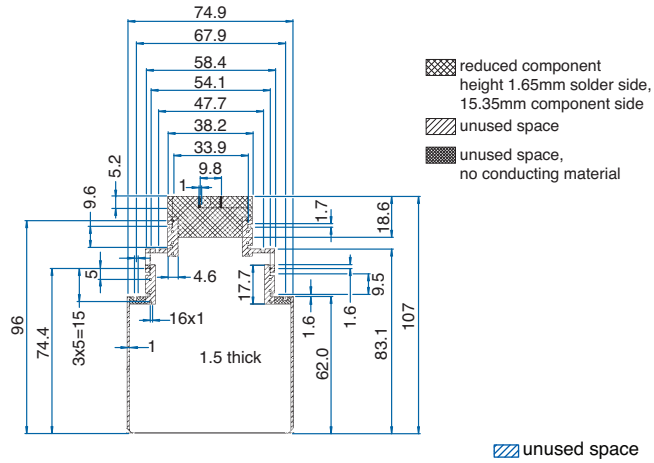

# KO4070 Series

Economical, compact KO4070 enclosures are supplied as easy to assemble kits. They are ideal for housing I/O circuits, relays, timers and other small devices. Each kit consists of two housing half shells and 4 to 16 machine solderable terminals with standard or extended length pins.

## MATERIALS

Housing Shell: Polycarbonate, 10% Glass Filled
Terminal: Tinned Bronze
Terminal Screw: Chromated Steel

## Temperature Rating:

125°C (257°F) UL94 VO
Standard Color: Light Gray

## PROTECTION

KO4070 enclosures have an IP20 rating (finger protected) and meet VBG4 and other European accident prevention requirements.

## CONSTRUCTION

The KO4070 enclosures consist of two housing shells that snap together, and sectional, snap-together terminals. The maximum preassembled number of terminals are part of the enclosure kit. Potting is not recommended. Enclosures with removable center cover sections are available upon request.

## BOARD PLACEMENT

Each enclosure can accept two boards, each up to 1.5mm (.0625 in.) thick, inserted vertically (parallel to the DIN rail) facing the terminals. These boards can be machine soldered to the terminals. Enclosure types KO4074 through KO4079, accept larger boards that can be screwed to the sidewalls of the housing shells (vertically, perpendicular to the DIN rail) using molded-in standoffs and 2 screws. Boards mounted on the sides can be 1mm (.04 in.) thick and require a wire jumper connection.

## TERMINALS

Box clamp design terminal blocks are used with the KO4070 series enclosures. Wire(s) to be terminated are squeezed between the bottom of the clamp and the busbar for reliable, gastight connections. The terminal blocks can be machine soldered to the board in the same step as the other components to save time and labor. Enclosures with extended length pins are available to increase enclosure cavity for large components. All terminals have funnel shaped wire openings to eliminate wire fraying. The terminal screws can be turned with a flat tip or a #1 or #2 Philips screwdriver.

## MOUNTING

The KO4070 series have integral mounting feet that snap onto standard 35mm DIN rail. They cannot be panel mounted.

## MARKING

Silk screen or attach label to the face of the enclosure.

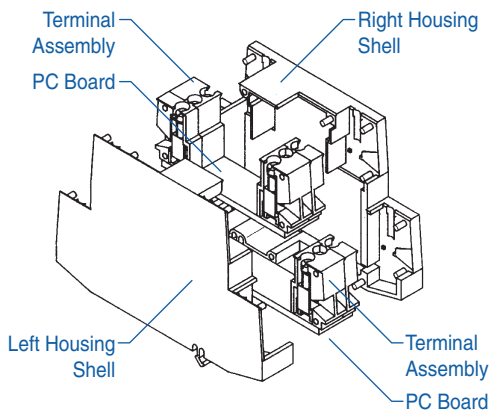

## 4 Terminal

### TECHNICAL INFORMATION

**Electrical:**
16A, 300V, 22-12 AWG
**Housing Material:**
Glass-filled Polycarbonate
**Temperature Range:**
Up to 125°C (257°F)
**Flammability Rating:**
UL94 V-O
**Color:**
Light Gray

**Terminal Type:**
Box Clamp
**Terminal Screw Size:**
M3.5
**Recommended Torque:**
0.8Nm
**PCB Locations:**
(2) Vertical, Parallel
**Mounting:**
35mm DIN Rail

### ORDERING INFORMATION

| Part Number | Type | Description | PCB Connection |
|---|---|---|---|
| 91.001 | KO4071 | Standard Length Pins | Solder Pins |

### ACCESSORIES

| Accessories | Part Number | Type |
|---|---|---|
| 1 Meter DIN Rail | 2511120/1M | TS35x7.5/1M |

### ENCLOSURE DRAWING (To convert to inches divide by 25.4.)

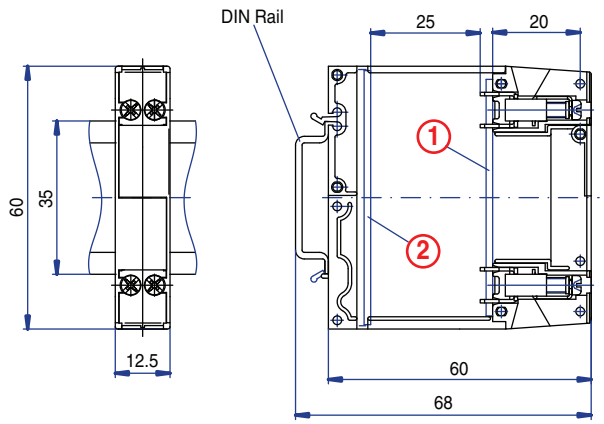


### PCB DRAWING (To convert to inches divide by 25.4.)

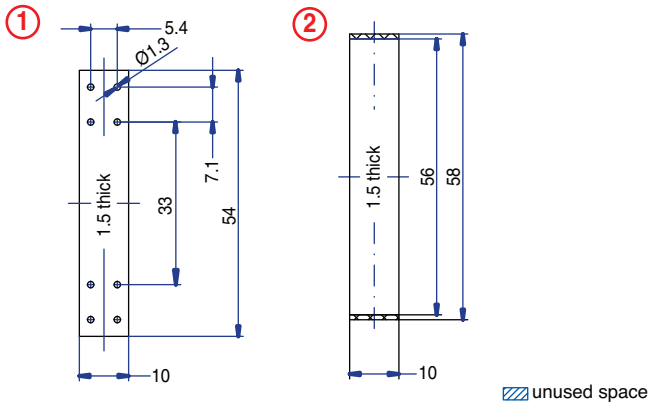


## 6 Terminal

### TECHNICAL INFORMATION

**Electrical:**
16A, 300V, 22-12 AWG
**Housing Material:**
Glass-filled Polycarbonate
**Temperature Range:**
Up to 125°C (257°F)
**Flammability Rating:**
UL94 V-O
**Color:**
Light Gray

**Terminal Type:**
Box Clamp
**Terminal Screw Size:**
M3.5
**Recommended Torque:**
0.8Nm
**PCB Locations:**
(2) Vertical, Parallel
**Mounting:**
35mm DIN Rail

### ORDERING INFORMATION

| Part Number | Type | Description | PCB Connection |
|---|---|---|---|
| 91.010 | KO4072 | Standard Length Pins | Solder Pins |

### ACCESSORIES

| Accessories | Part Number | Type |
|---|---|---|
| 1 Meter DIN Rail | 2511120/1M | TS35x7.5/1M |

### ENCLOSURE DRAWING (To convert to inches divide by 25.4.)

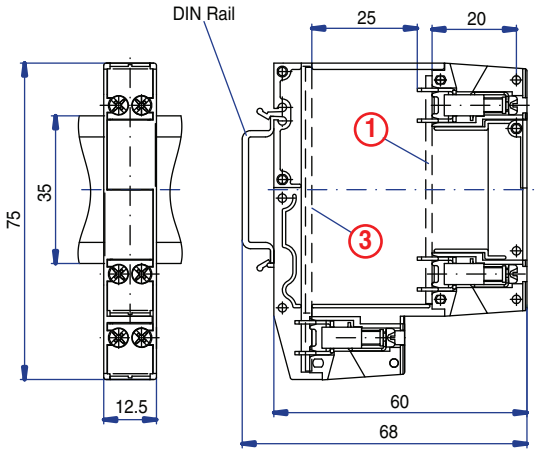


### PCB DRAWING (To convert to inches divide by 25.4.)

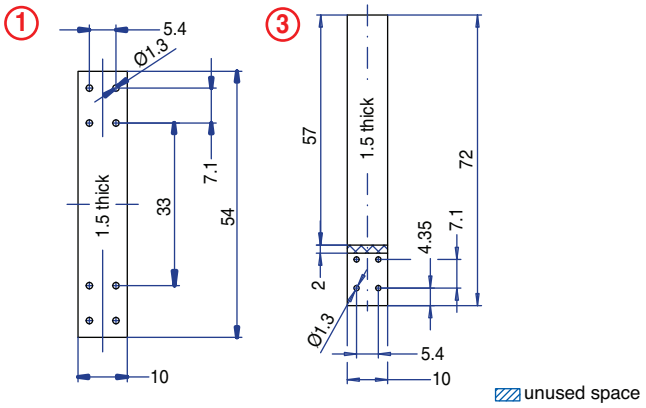

## 6 Terminal

### TECHNICAL INFORMATION

**Electrical:**
16A, 300V, 22-12 AWG
**Housing Material:**
Glass-filled Polycarbonate
**Temperature Range:**
Up to 125°C (257°F)
**Flammability Rating:**
UL94 V-O
**Color:**
Light Gray

**Terminal Type:**
Box Clamp
**Terminal Screw Size:**
M3.5
**Recommended Torque:**
0.8Nm
**PCB Locations:**
(1) Vertical, Perpendicular
(2) Vertical, Parallel
**Mounting:**
35mm DIN Rail

### ORDERING INFORMATION

| Part Number | Type | Description | PCB Connection |
|---|---|---|---|
| 91.020 | KO4074 | Standard Length Pins | Solder Pins |

### ACCESSORIES

| Accessories | Part Number | Type |
|---|---|---|
| 1 Meter DIN Rail | 2511120/1M | TS35x7.5/1M |

### ENCLOSURE DRAWING (To convert to inches divide by 25.4.)

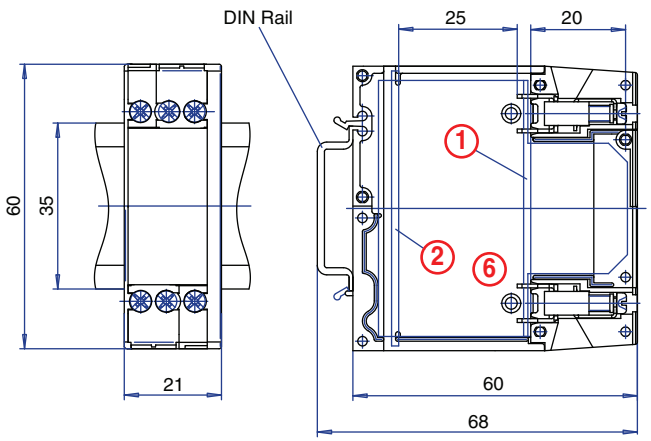


### PCB DRAWING (To convert to inches divide by 25.4.)

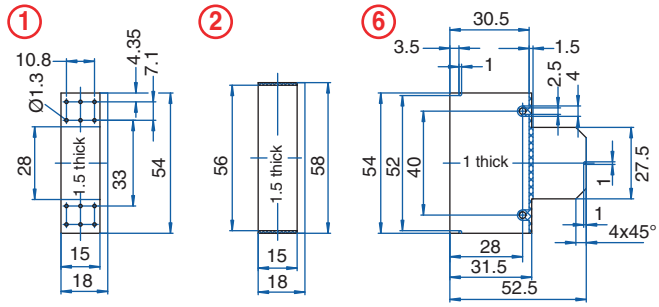


## 8 Terminal

### TECHNICAL INFORMATION

**Electrical:**
16A, 300V, 22-12 AWG
**Housing Material:**
Glass-filled Polycarbonate
**Temperature Range:**
Up to 125°C (257°F)
**Flammability Rating:**
UL94 V-O
**Color:**
Light Gray

**Terminal Type:**
Box Clamp
**Terminal Screw Size:**
M3.5
**Recommended Torque:**
0.8Nm
**PCB Locations:**
(2) Vertical, Parallel
**Mounting:**
35mm DIN Rail

### ORDERING INFORMATION

| Part Number | Type | Description | PCB Connection |
|---|---|---|---|
| 91.030 | KO4073 | Standard Length Pins | Solder Pins |

### ACCESSORIES

| Accessories | Part Number | Type |
|---|---|---|
| 1 Meter DIN Rail | 2511120/1M | TS35x7.5/1M |

### ENCLOSURE DRAWING (To convert to inches divide by 25.4.)

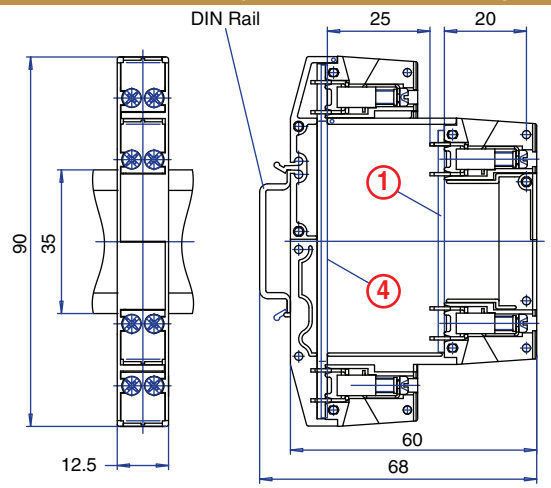


### PCB DRAWING (To convert to inches divide by 25.4.)

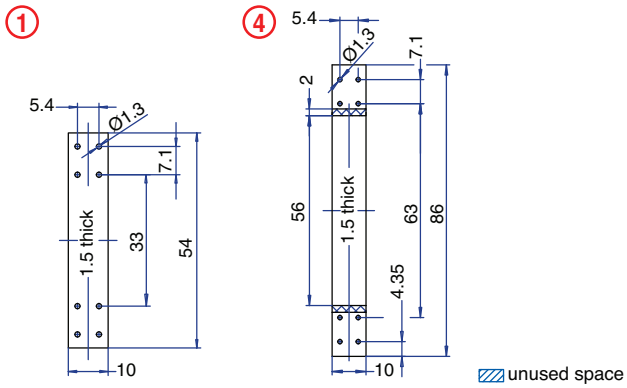

## 8 Terminal

### TECHNICAL INFORMATION

**Electrical:**
16A, 300V, 22-12 AWG
**Housing Material:**
Glass-filled Polycarbonate
**Temperature Range:**
Up to 125°C (257°F)
**Flammability Rating:**
UL94 V-O
**Color:**
Light Gray

**Terminal Type:**
Box Clamp
**Terminal Screw Size:**
M3.5
**Recommended Torque:**
0.8Nm
**PCB Locations:**
(2) Vertical, Perpendicular
(2) Vertical, Parallel
**Mounting:**
35mm DIN Rail

### ORDERING INFORMATION

| Part Number | Type | Description | PCB Connection |
|---|---|---|---|
| 91.040 | KO4077 | Standard Length Pins | Solder Pins |

### ACCESSORIES

| Accessories | Part Number | Type |
|---|---|---|
| 1 Meter DIN Rail | 2511120/1M | TS35x7.5/1M |

### ENCLOSURE DRAWING (To convert to inches divide by 25.4.)

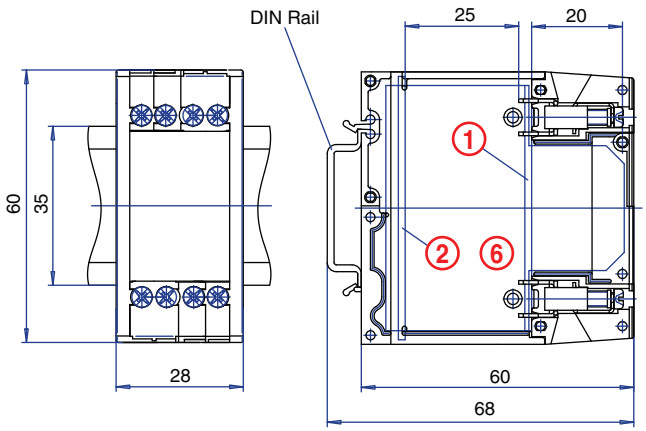


### PCB DRAWING (To convert to inches divide by 25.4.)

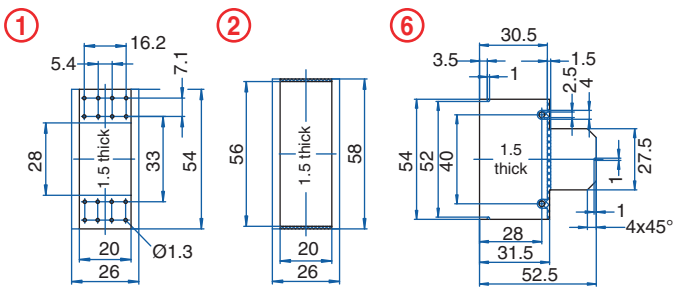


unused space

## 9 Terminal

### TECHNICAL INFORMATION

**Electrical:**
16A, 300V, 22-12 AWG
**Housing Material:**
Glass-filled Polycarbonate
**Temperature Range:**
Up to 125°C (257°F)
**Flammability Rating:**
UL94 V-O
**Color:**
Light Gray

**Terminal Type:**
Box Clamp
**Terminal Screw Size:**
M3.5
**Recommended Torque:**
0.8Nm
**PCB Locations:**
(1) Vertical, Perpendicular
(2) Vertical, Parallel
**Mounting:**
35mm DIN Rail

### ORDERING INFORMATION

| Part Number | Type | Description | PCB Connection |
|---|---|---|---|
| 91.050 | KO4075 | Standard Length Pins | Solder Pins |

### ACCESSORIES

| Accessories | Part Number | Type |
|---|---|---|
| 1 Meter DIN Rail | 2511120/1M | TS35x7.5/1M |

### ENCLOSURE DRAWING (To convert to inches divide by 25.4.)

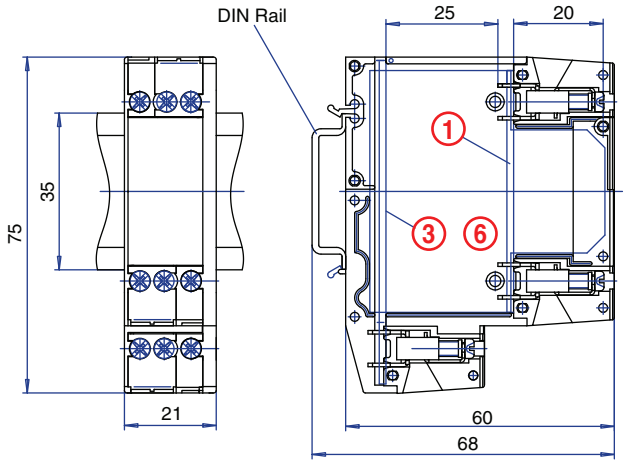


### PCB DRAWING (To convert to inches divide by 25.4.)

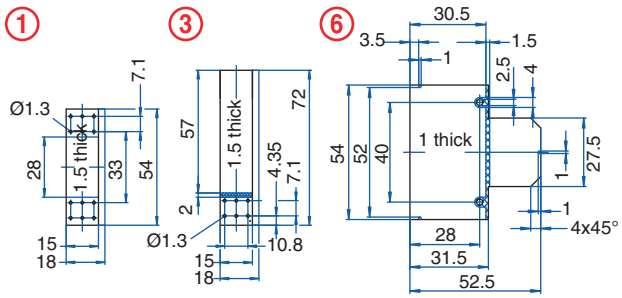


unused space

## 12 Terminal

### TECHNICAL INFORMATION

**Electrical:**
16A, 300V, 22-12 AWG
**Housing Material:**
Glass-filled Polycarbonate
**Temperature Range:**
Up to 125°C (257°F)
**Flammability Rating:**
UL94 V-O
**Color:**
Light Gray

**Terminal Type:**
Box Clamp
**Terminal Screw Size:**
M3.5
**Recommended Torque:**
0.8Nm
**PCB Locations:**
(1) Vertical, Perpendicular
(2) Vertical, Parallel
**Mounting:**
35mm DIN Rail

### ORDERING INFORMATION

| Part Number | Type | Description | PCB Connection |
|---|---|---|---|
| 91.060 | KO4076 | Standard Length Pins | Solder Pins |

### ACCESSORIES

| Accessories | Part Number | Type |
|---|---|---|
| 1 Meter DIN Rail | 2511120/1M | TS35x7.5/1M |

### ENCLOSURE DRAWING (To convert to inches divide by 25.4.)

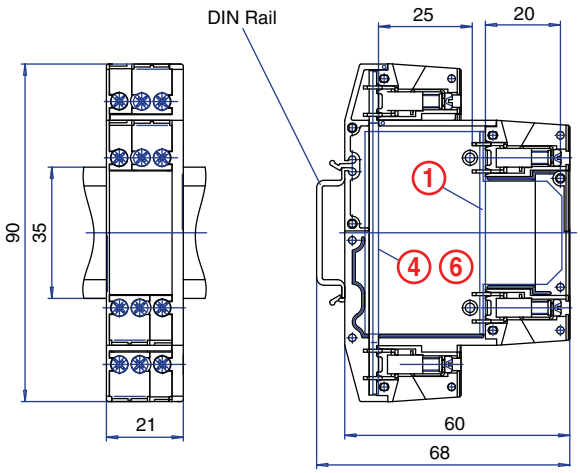


### PCB DRAWING (To convert to inches divide by 25.4.)

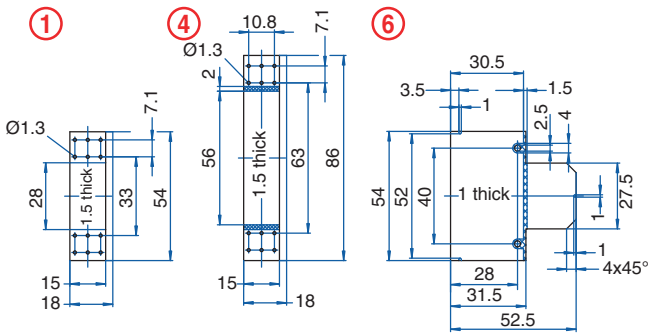


unused space

## 12 Terminal

### TECHNICAL INFORMATION

**Electrical:**
16A, 300V, 22-12 AWG
**Housing Material:**
Glass-filled Polycarbonate
**Temperature Range:**
Up to 125°C (257°F)
**Flammability Rating:**
UL94 V-O
**Color:**
Light Gray

**Terminal Type:**
Box Clamp
**Terminal Screw Size:**
M3.5
**Recommended Torque:**
0.8Nm
**PCB Locations:**
(2) Vertical, Perpendicular
(2) Vertical, Parallel
**Mounting:**
35mm DIN Rail

### ORDERING INFORMATION

| Part Number | Type | Description | PCB Connection |
|---|---|---|---|
| 91.070 | KO4078 | Standard Length Pins | Solder Pins |

### ACCESSORIES

| Accessories | Part Number | Type |
|---|---|---|
| 1 Meter DIN Rail | 2511120/1M | TS35x7.5/1M |

### ENCLOSURE DRAWING (To convert to inches divide by 25.4.)

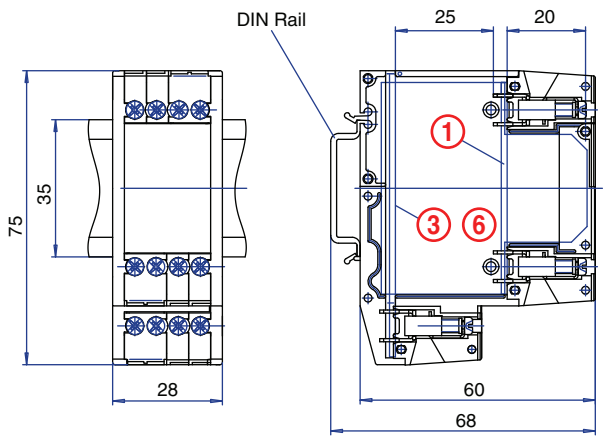


### PCB DRAWING (To convert to inches divide by 25.4.)

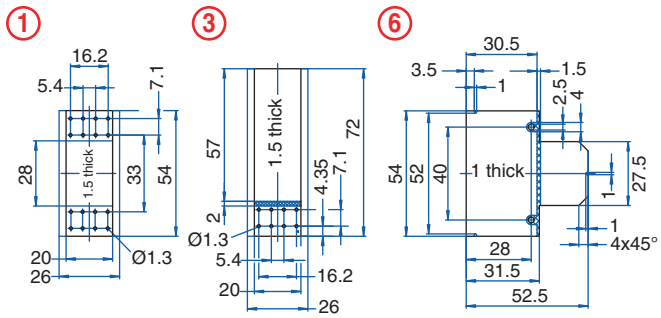


unused space

## 16 Terminal

### TECHNICAL INFORMATION

**Electrical:**
16A, 300V, 22-12 AWG

**Housing Material:**
Glass-filled Polycarbonate

**Temperature Range:**
Up to 125°C (257°F)

**Flammability Rating:**
UL94 V-O

**Color:**
Light Gray

**Terminal Type:**
Box Clamp

**Terminal Screw Size:**
M3.5

**Recommended Torque:**
0.8Nm

**PCB Locations:**
(2) Vertical, Perpendicular
(2) Vertical, Parallel

**Mounting:**
35mm DIN Rail

### ORDERING INFORMATION

| Part Number | Type | Description | PCB Connection |
|---|---|---|---|
| 91.080 | KO4079 | Standard Length Pins | Solder Pins |

### ACCESSORIES

| Accessories | Part Number | Type |
|---|---|---|
| 1 Meter DIN Rail | 2511120/1M | TS35x7.5/1M |

### ENCLOSURE DRAWING (To convert to inches divide by 25.4.)

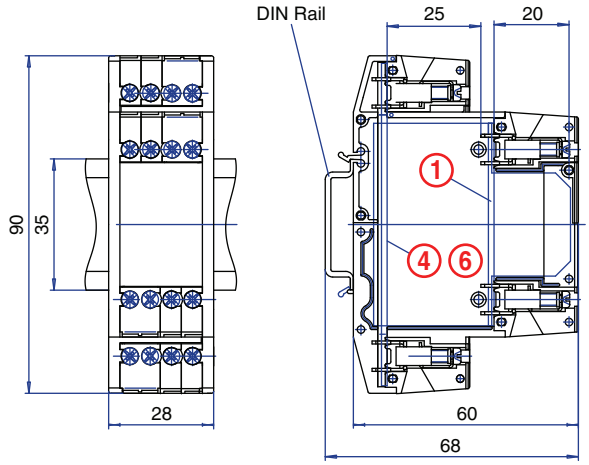


### PCB DRAWING (To convert to inches divide by 25.4.)

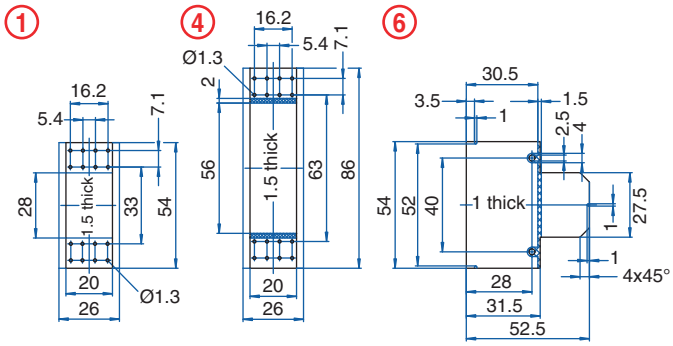


unused space

# *In-Rail Bus System*

The In-Rail Bus System is an extremely flexible bus system suitable for data transmission and power supply. The principle is a printed circuit board with 5 bus lines that is installed into a DIN rail. This bus system can carry 5A per trace with a voltage of up to 63V. Spring contact blocks can be installed in almost any DIN enclosure for connection to the bus system. Contact security is ensured due to the high spring force of the gold plated, double contact springs.

**Features:**

- Universal Bus system useable with most DIN enclosure types*
- 5 Bus lines per Bus PCB
- 5A per bus, 25A max per PCB rail
- Quick and easy mounting in the DIN rail
- Gold plated contact surfaces
- Contact block springs with double contacts
- High spring force on the contact springs
- Max temperature 70°C
- Can be used for internal busing
- Standard DIN profiles, 7.5mm and 15mm
- UL approval
- 250 mm piece components can be supplied in lengths up to 1 meter

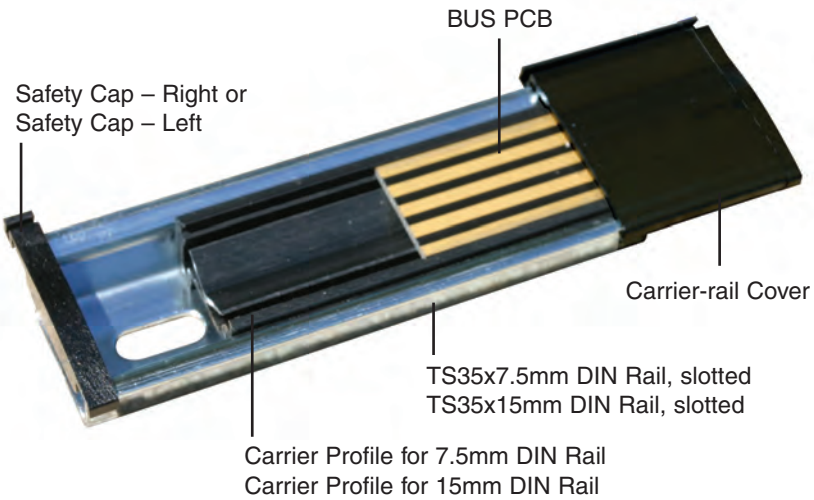


**Ordering Information**

| Part Number | Description |
|---|---|
| 91.905/250mm | Carrier Profile for 7.5mm DIN Rail, 250 mm length |
| 91.915/250mm | Carrier Profile for 15mm DIN Rail, 250 mm length |
| 91.925/250mm | BUS PCB, 250 mm length |
| 91.935/250mm | Carrier-rail Cover, 250 mm length |
| 91.945 | Safety Cap – Right |
| 91.946 | Safety Cap – Left |
| 91.955 | Spring Contact Block |
| 2511120/1M | TS35x7.5mm DIN Rail, slotted, 1 meter length |
| CA701-15/S | TS35x15mm DIN Rail, slotted, 1 meter length |

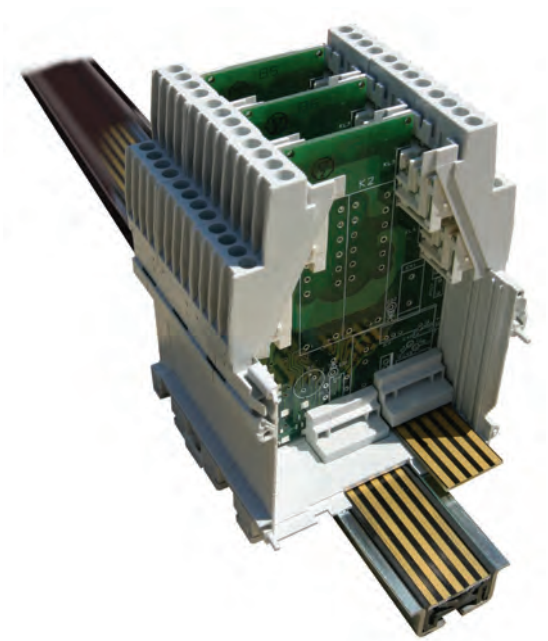

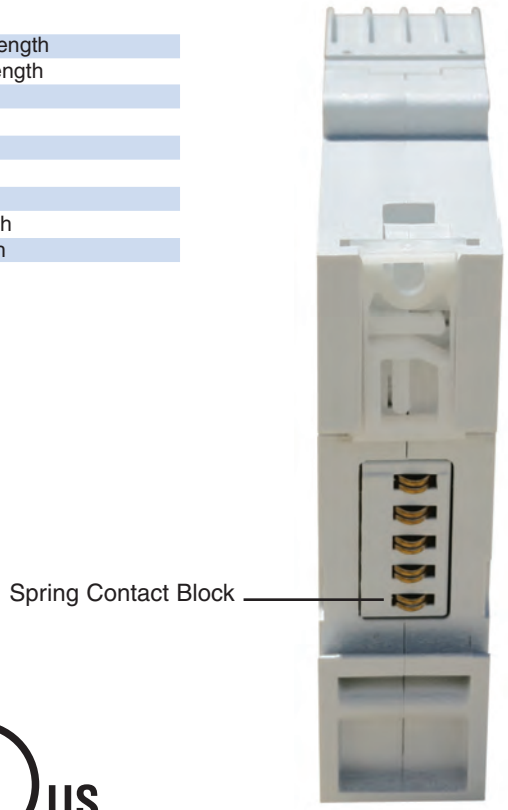


c UL US
E249129

* Hole must be milled in enclosure base to accept spring contact block.

| Part No. | Page |
|---|---|
| 90.900 | 86 |
| 90.903 | 86 |
| 90.905 | 86 |
| 90.910 | 86 |
| 90.913 | 86 |
| 90.915 | 86 |
| 90.920 | 87 |
| 90.923 | 87 |
| 90.925 | 87 |
| 90.930 | 87 |
| 90.933 | 87 |
| 90.935 | 87 |
| 90.940 | 88 |
| 90.943 | 88 |
| 90.945 | 88 |
| 90.950 | 88 |
| 90.953 | 88 |
| 90.955 | 88 |
| 90.960 | 89 |
| 90.963 | 89 |
| 90.965 | 89 |
| 90.970 | 89 |
| 90.973 | 89 |
| 90.975 | 89 |
| 91.945 | 96 |
| 91.946 | 96 |
| 91.955 | 96 |
| 90.001 | 42 |
| 90.001.1 | 42 |
| 90.001.2 | 42 |
| 90.010 | 42 |
| 90.010.1 | 43 |
| 90.020 | 43 |
| 90.020.1 | 43 |
| 90.020.2 | 43 |
| 90.030 | 43 |
| 90.040 | 44 |
| 90.040.1 | 44 |
| 90.050 | 44 |
| 90.050.1 | 44-45 |
| 90.050.5 | 45 |
| 90.060 | 45 |
| 90.070 | 46 |
| 90.080 | 46 |
| 90.080.1 | 46-47 |
| 90.090 | 47 |
| 90.100 | 47 |
| 90.100.1 | 47 |
| 90.120 | 5 |
| 90.121 | 5 |
| 90.122 | 5 |
| 90.130 | 6 |
| 90.131 | 6 |
| 90.132 | 6 |
| 90.140 | 7 |
| 90.141 | 7 |
| 90.142 | 7 |
| 90.150 | 8 |
| 90.151 | 8 |
| 90.152 | 8 |
| 90.160 | 9 |
| 90.161 | 9 |

| Part No. | Page |
|---|---|
| 90.162 | 9 |
| 90.170 | 10 |
| 90.171 | 10 |
| 90.172 | 10 |
| 90.180 | 11 |
| 90.181 | 11 |
| 90.182 | 11 |
| 90.190 | 5-11 |
| 90.191 | 5-11 |
| 90.192 | 5-11 |
| 90.201 | 15 |
| 90.201.1 | 15 |
| 90.201.2 | 15 |
| 90.202 | 15 |
| 90.202.1 | 15 |
| 90.202.2 | 15 |
| 90.215 | 16 |
| 90.230 | 16 |
| 90.290 | 17 |
| 90.291 | 17 |
| 90.292 | 17 |
| 90.300 | 17 |
| 90.301 | 17 |
| 90.302 | 17 |
| 90.320 | 18 |
| 90.321 | 18 |
| 90.322 | 18 |
| 90.350 | 18 |
| 90.351 | 18 |
| 90.352 | 18 |
| 90.380 | 19 |
| 90.381 | 19 |
| 90.382 | 19 |
| 90.410 | 20 |
| 90.411 | 20 |
| 90.412 | 20 |
| 90.440 | 21 |
| 90.441 | 21 |
| 90.442 | 21 |
| 90.470 | 22 |
| 90.471 | 22 |
| 90.472 | 22 |
| 90.500 | 23 |
| 90.501 | 23 |
| 90.502 | 23 |
| 90.530 | 24 |
| 90.531 | 24 |
| 90.532 | 24 |
| 90.560 | 25 |
| 90.590 | 26 |
| 90.591 | 26 |
| 90.592 | 26 |
| 90.620 | 27 |
| 90.621 | 27 |
| 90.622 | 27 |
| 90.680 | 28 |
| 90.681 | 28 |
| 90.682 | 28 |
| 90.710 | 29 |
| 90.740 | 30 |
| 90.770 | 31 |
| 90.800 | 33-39 |

| Part No. | Page |
|---|---|
| 90.803 | 33-39 |
| 90.804 | 33-39 |
| 90.807 | 33-39 |
| 90.808 | 34-37 |
| 90.810 | 33 |
| 90.810.1 | 33 |
| 90.810.2 | 33 |
| 90.810.3 | 33 |
| 90.810.4 | 33 |
| 90.810.5 | 33 |
| 90.815 | 32 |
| 90.820 | 35 |
| 90.820.1 | 35 |
| 90.820.2 | 34-35 |
| 90.820.3 | 34-35 |
| 90.820.4 | 34-35 |
| 90.820.5 | 34-35 |
| 90.825 | 34 |
| 90.825.1 | 34 |
| 90.830 | 36,38 |
| 90.830.1 | 38 |
| 90.830.2 | 38 |
| 90.830.3 | 38 |
| 90.830.4 | 38 |
| 90.830.5 | 38 |
| 90.830.6 | 36 |
| 90.840 | 39 |
| 90.840.1 | 39 |
| 90.840.2 | 39 |
| 90.840.3 | 39 |
| 90.840.4 | 39 |
| 90.840.5 | 39 |
| 90.845 | 37 |
| 90.845.6 | 37 |
| 91.001 | 91 |
| 91.010 | 91 |
| 91.020 | 92 |
| 91.030 | 92 |
| 91.040 | 93 |
| 91.050 | 93 |
| 91.060 | 94 |
| 91.070 | 94 |
| 91.080 | 95 |
| 91.201 | 50 |
| 91.201.1 | 50-72 |
| 91.202 | 50 |
| 91.203 | 52 |
| 91.220 | 54 |
| 91.230 | 63 |
| 91.235 | 64 |
| 91.240 | 54 |
| 91.243 | 56 |
| 91.250 | 63 |
| 91.255 | 64 |
| 91.260 | 60 |
| 91.270 | 65 |
| 91.280 | 60 |
| 91.283 | 62 |
| 91.290 | 65 |
| 91.300 | 69 |
| 91.310 | 68 |
| 91.320 | 69 |

| Part No. | Page |
|---|---|
| 91.330 | 68 |
| 91.340 | 70 |
| 91.345 | 71 |
| 91.360 | 70 |
| 91.365 | 71 |
| 91.380 | 72 |
| 91.400 | 72 |
| 91.420 | 57 |
| 91.440 | 57 |
| 91.443 | 58 |
| 91.501 | 51 |
| 91.502 | 51 |
| 91.503 | 52 |
| 91.520 | 55 |
| 91.540 | 55 |
| 91.543 | 56 |
| 91.560 | 61 |
| 91.570 | 66 |
| 91.580 | 61 |
| 91.583 | 62 |
| 91.590 | 66 |
| 91.600 | 73 |
| 91.610 | 73 |
| 91.710 | 53 |
| 91.720 | 53 |
| 91.730 | 59 |
| 91.740 | 59 |
| 91.750 | 67 |
| 91.760 | 67 |
| 91.800 | 75 |
| 91.801 | 75 |
| 91.801.1 | 75-84 |
| 91.802 | 76 |
| 91.803 | 76 |
| 91.810 | 77 |
| 91.811 | 77 |
| 91.812 | 78 |
| 91.813 | 78 |
| 91.820 | 79 |
| 91.821 | 79 |
| 91.822 | 80 |
| 91.830 | 80 |
| 91.831 | 81 |
| 91.832 | 81 |
| 91.840 | 82 |
| 91.841 | 82 |
| 91.842 | 83 |
| 91.850 | 83 |
| 91.851 | 84 |
| 91.852 | 84 |
| 91.905/250mm | 96 |
| 91.915/250mm | 96 |
| 91.925/250mm | 96 |
| 91.935/250mm | 96 |
| 93.001.2 | 15,18-39 |
| 93.001.5 | 50-73 |
| 2511120/1M | 5-95 |
| CA701-15/S | 96 |

# STANDARD TERMS AND CONDITIONS OF SALE

**TITLE** - Title to the products of ALTECH shall remain with ALTECH until payment is made in full by Customer. Such reservation of title is for the purpose of securing the purchase price and shall not relieve Customer of the duty to inspect the products upon receipt, to notify ALTECH of any deficiencies or defects, and to exercise due care in the use, installation, operation, and maintenance of the products when on the premise of the Customer or under the control of the Customer. Notwithstanding any reservation of title by ALTECH, risk of loss shall pass to customer at any time of shipment.

**SHIPMENT AND DELIVERY** - All orders for destination in the mainland United States (less Hawaii, Alaska and non-continental United States possessions) will be shipped F.O.B. Flemington, N.J. All destination, shipping and other charges shall be paid by the Customer in accordance with ALTECH's then current shipping and billing practices.

Delivery dates given in the acceptance of any order are approximate. ALTECH shall not be liable for delays in delivery or in performance due to causes beyond its reasonable control including acts of God, acts of Customer, acts of civil or military authority, fires, strikes or other labor disturbances, war, riot or delays in transportation. In the event of such delay, the date of delivery or performance shall be extended for a period equal to the time lost by reason of the delay.

**PRICE** - PRICES in any ALTECH publication are subject to change without prior notification. Catalog prices are based on prices published in the current price list. All written quotations are valid for thirty (30) days from the date of quotation. Customer shall pay all sales, use, excise or similar taxes whenever ALTECH must itself pay and/or collect such tax from Customer arising out of the sale.

**PAYMENT** - Customer agrees to make payment within thirty (30) days of date of the invoice from ALTECH. Customer agrees to pay a late payment charge of one and one-half percent (1.5% per month, or the maximum late payment charge permitted by applicable law, whichever is less, on any unpaid amount for each calendar month (or fraction thereof) that such payment is in default. Orders amounting to less than $100.00 will be billed at $100.00 plus freight. Full carton purchases are required. In the event of referral to an attorney for collection, reasonable attorney's fees for collection of the overdue amount shall be paid by Customer. In the event payment is not received within 30 days from the date of invoice, any discount shall be cancelled and the full list price will be due.

**LIMITED WARRANTY** - ALTECH warrants to Customer that the equipment purchases shall be free from defects in material and workmanship under normal use and service for a period of one year from shipment.

Written notice as an explanation of the circumstances of any claim that the equipment has proved defective in material or workmanship shall be given promptly by the Customer to ALTECH.

ALTECH will not be liable for any misuse, improper operations, improper installation, improper maintenance, alteration, modification, accident or unusual degradation of the equipment or parts due to an unsuitable installation environment.

No representation of other affirmation of facts, including but not limited to statements regarding capacity, suitability for use or performance of the equipment, shall be or be deemed to be a warranty or representation by ALTECH for any purpose, nor give rise to any liability or obligation of ALTECH whatsoever.

Customer's sole and exclusive remedy in the event of breach of warranty, as set forth herein, is expressly limited to (1) the correction of the defect by adjustment, repair, modification, or replacement, or (2) issuance of a credit or refund of the purchase price for the defective equipment at ALTECH's election and sole expense.

EXCEPT AS SPECIFICALLY PROVIDED IN THIS AGREEMENT, THERE ARE NO OTHER WARRANTIES EXPRESSED OR IMPLIED INCLUDING BUT NOT LIMITED TO ANY IMPLIED WARRANTIES OR MERCHANTABILITY OR FITNESS FOR A PARTICULAR PURPOSE.

THIS WARRANTY EXTENDS ONLY TO THE CUSTOMER FROM ALTECH OR ITS AUTHORIZED DISTRIBUTOR.

**LIMITATION OF LIABILITY** - IN NO EVENT, SHALL ALTECH BE LIABLE FOR LOSS OF PROFITS, INDIRECT, SPECIAL, CONSEQUENTIAL OR OTHER SIMILAR DAMAGES ARISING OUT OF ANY BREACH OF THIS AGREEMENT OR OBLIGATIONS UNDER THE AGREEMENT.

ALTECH SHALL NOT BE LIABLE FOR ANY DAMAGES CAUSED BY DELAY IN SHIPMENT, INSTALLATION OR FURNISHING OF EQUIPMENT OR SERVICES UNDER THIS AGREEMENT.

No action arising out of any claimed breach of this Agreement may be brought by either party more than two (2) years after the cause of action has accrued.

**PATENT INDEMNITY** - ALTECH shall defend or settle any suit or proceeding brought against Customer based on a claim that any equipment made to ALTECH design and furnished hereunder constitutes an infringement of any existing United States patent, provided (ALTECH) is notified promptly in writing and is given complete authorization and information required for the defense, and ALTECH shall pay all damages and costs awarded against Customer, but shall not be responsible for any costs, expense or compromise incurred or made by Customer without ALTECH's prior written consent. If any equipment is in ALTECH's opinion likely to or does become the subject of a claim for patent infringement, ALTECH may at its option and expense procure for Customer the right to continue using the device, modify it to become non-infringing, but in the event ALTECH is not reasonably able to modify, substitute, or otherwise procure for Customer the right to continue using it, ALTECH will remove such equipment and refund to Customer the amount paid in excess of a reasonable rental for past use.

ALTECH shall not be liable for any infringement or claim based upon use of the equipment in combination with other equipment not supplied by ALTECH or with modifications made by Customer.

The foregoing states the entire liability of ALTECH to Customer arising from patent infringement.

**SELLER'S REMEDIES** - Should Customer fail to make any payment within ten (10) days of its due date, or fail to perform any other of the Customer's obligation hereunder upon thirty (30) days written notice, or should Customer be or become insolvent or be a party to any bankruptcy receivership proceeding prior to full payment of all amounts payable hereunder, ALTECH may: (a) with or without demand or notice to customer declare the entire amount unpaid immediately due and payable; (b) enter upon the premises where the equipment may be found and remove it (Customer shall assemble the equipment and make it available to ALTECH at a place reasonably convenient to both parties and shall permit and assist ALTECH in effecting the retaking and removal of the equipment); and (c) sell any or all the equipment as permitted under applicable law, applying the proceeds of the sale to payment of the expenses of retaking, repairing and selling the equipment, reasonable attorney fees and to the satisfaction of all indebtedness then due and unpaid under this Agreement. Any surplus shall be paid to Customer and any deficiency shall be paid to ALTECH by Customer.

The remedies provided herein shall be cumulative and in addition to all other remedies provided by law or equity or under the Uniform Commercial Code.

**GOVERNING LAW** - This agreement will be governed by the Laws of the State of New Jersey.

**GENERAL** - This Agreement shall only become effective and binding when either (a) it has been accepted and executed by an authorized representative of ALTECH, or (b) the equipment has been shipped to Customer, with or without acceptance in writing hereon. Notice of acceptance is hereby waived by Customer. Customer hereby acknowledges receipt of a true and complete copy hereof.

No addition to or modification of any of the Terms and Conditions of Sale as they appear herein shall be binding upon ALTECH unless signed in writing by duly authorized representative of ALTECH in Flemington, N.J.

Typographical and clerical errors in quotations, orders and acknowledgments are subject to correction.

This Agreement is not assignable without the prior written consent of ALTECH. Any attempt to assign any of the rights, duties or obligations of this Agreement without such consent is void.

If any provision or provisions of this Agreement shall be held to be invalid, illegal or unenforceable, the validity, legality and enforceability, of the remaining provisions shall not in any way be affected or impaired thereby.

ALTECH is not responsible for failure to fulfill its obligation under this Agreement due to causes beyond its control, or except as agreed herein.

THE CUSTOMER ACKNOWLEDGES THAT HE HAS READ THE AGREEMENT, UNDERSTANDS IT, AND AGREES TO BE BOUND BY ITS TERMS AND CONDITIONS. FURTHERMORE, THE CUSTOMER AGREES THAT IT IS THE COMPLETE AND EXCLUSIVE STATEMENT OF THE AGREEMENT BETWEEN THE PARTIES, WHICH SUPERSEDES ALL PROPOSALS OR PRIOR AGREEMENTS, ORAL OR WRITTEN, EXPRESSED OR IMPLIED, AND ALL OTHER COMMUNICATIONS BETWEEN THE PARTIES RELATING TO THE SUBJECT MATTER OF THIS AGREEMENT.

# Here are other great catalogs available from Altech!

### *Circuit Protection Devices*

Altech carries DIN Rail mounted UL508 Manual Motor Controllers/ Miniature Circuit Breakers, UL489 Miniature Circuit Breakers and UL1077 Supplementary Protectors. The UL489 versions are 17.5mm wide, thermal magnetic, 240V, 480Y/277V AC, 50/60Hz, 125 and 250 VDC models, with short circuit interrupt capacity of 10kA, a positive trip indicator, and are line/load reversible. The UL1077 versions are DIN rail mounted, 17.5mm wide, thermal magnetic, 480Y/277V AC, 50/60Hz, a short circuit withstand capacity 10kA, have a positive trip indicator.

**Altech Corp.®**
35 Royal Rd., Flemington, NJ 08822
908-806-9400
FAX 908-806-9490
www.altechcorp.com

### *Interface Modules and Power Supplies*

Altech offers a wide range of DIN Rail or panel mount cable interface modules, relay interface modules, carrier modules, custom designed modules and industrial relays. Cable to connector models include: D-Sub connectors, ribbon cable connectors, and Dip socket connectors to terminals. Standard relay modules from 1 to 16 channels, and safety relay modules from 1 to 16 channels and up to 10 poles are included. The catalog also contains industrial and slimline relays and custom designed interface modules.

**Altech Corp.®**
35 Royal Rd., Flemington, NJ 08822
908-806-9400
FAX 908-806-9490
www.altechcorp.com

### *Contactors and More!*

Altech's now carries contactors, mini contactors, definite purpose contactors & overload relays. The contactors come in 3 and 4 pole configurations at 9A to 800A. Available in Single Phase (115 -230V) and Three Phase (200 - 575V) AC and DC models. A large variety of coil voltages are supported and the accessories are auxiliary contacts and overload relays. The mini contactors come in screw clamp, fast-on, cage clamp and solder pin types.

**Altech Corp.®**
35 Royal Rd., Flemington, NJ 08822
908-806-9400
FAX 908-806-9490
www.altechcorp.com

### *Terminal Blocks*

Altech offers a NEW Terminal Block catalog with the most competitively priced blocks in the industry. We feature screw and spring clamp models for DIN rail and panel mount applications. This advanced line of wire termination products will increase your design options and help to get the job done more efficiently. Our line of blocks include feed-through (single, double or triple level), distribution, ground, fuse, disconnect, thermocouple, surge suppressor and indicator. A wide variety of accessories, tools and ferrules are available.

**Altech Corp.®**
35 Royal Rd., Flemington, NJ 08822
908-806-9400
FAX 908-806-9490
www.altechcorp.com

### *Industrial Enclosures*

Altech's expanded it's line of TK Industrial Enclosures with metric knockouts and also added the versatile TG Enclosure series. Now our entire line of industrial enclosures is in metric. Metric knockouts align with international standards making selection easier and more universal. Plus the PG standard is still available. All of Altech's enclosures are internationally accepted and stand up to the harshest environments. They protect against dust, water and corrosion while enhancing the value of your product. Rated up to IP66 (NEMA type 4x), Altech enclosures are available in a wide range of sizes.

**Altech Corp.®**
35 Royal Rd., Flemington, NJ 08822
908-806-9400
FAX 908-806-9490
www.altechcorp.com

### *Liquid Tight Strain Reliefs*

This 50-page catalog introduces Altech's full line of Liquid Tight Strain Reliefs (Cord Grips) which are used to seal cable entries, keep contaminant's from entering enclosures, provide strain relief and thus reduce stress on components and termination points inside enclosures. Functions include Straight-Through, Increased Strain Relief, Bend Protection, Pull/Bend Protection, Multi-conductor, Flat Cable, Atex and EMI/RFI. They can be used with almost any type of cable, cord or conductor - solid, stranded, flat, shielded, high temperature, etc.

**Altech Corp.®**
35 Royal Rd., Flemington, NJ 08822
908-806-9400
FAX 908-806-9490
www.altechcorp.com

### *DIN Rail Power Supplies*

Altech DIN RAIL mountable power supplies have Universal AC input. They are suitable for industrial and automation applications.

- UL508 Listed
- Installed on DIN rail TS35/ 7.5 or 15
- Available from 30-960W
- Protections: Short circuit / Overload / Over-voltage / Over temperature
- Cooling by free air convection
- Worldwide approvals
- 3 year warranty
- NEW DC-UPS Solutions and Battery Chargers

**Altech Corp.®**
35 Royal Rd., Flemington, NJ 08822
908-806-9400
FAX 908-806-9490
www.altechcorp.com

### *Motor Disconnect Switches*

Altech's line of Motor Disconnect Switches are UL 508 listed as Manual Motor Controllers for AC Motor Starting Across-the-line and AC General use. This new 24 page catalog includes the 3 different handle designs, which are all available in gray/black or yellow/red housings. Electrical ratings are 25-150A / 600V. The switches are non-fused DIN Rail mountable. Neat features include: snap-on auxiliary switches, door mounting kit and a retrofit 30A fuse holder. Also featured are Enclosed Motor Disconnect Switches & Fused (plastic only) versions (30A), available in plastic, aluminum, sheet metal or stainless steel.

**Altech Corp.®**
35 Royal Rd., Flemington, NJ 08822
908-806-9400 • FAX 908-806-9490
www.altechcorp.com

# altechcorp.com

Altech Corporation
35 Royal Road
Flemington, NJ 08822-6000
P 908.806.9400 • F 908.806.9490
www.altechcorp.com

Altech Corp.® 380-042014-3M
Printed April 2014

Мы молодая и активно развивающаяся компания в области поставок электронных компонентов. Мы поставляем электронные компоненты отечественного и импортного производства напрямую от производителей и с крупнейших складов мира.

Благодаря сотрудничеству с мировыми поставщиками мы осуществляем комплексные и плановые поставки широчайшего спектра электронных компонентов.

Собственная эффективная логистика и склад в обеспечивает надежную поставку продукции в точно указанные сроки по всей России.

Мы осуществляем техническую поддержку нашим клиентам и предпродажную проверку качества продукции. На все поставляемые продукты мы предоставляем гарантию .

Осуществляем поставки продукции под контролем ВП МО РФ на предприятия военно-промышленного комплекса России , а также работаем в рамках 275 ФЗ с открытием отдельных счетов в уполномоченном банке. Система менеджмента качества компании соответствует требованиям ГОСТ ISO 9001.

Минимальные сроки поставки, гибкие цены, неограниченный ассортимент и индивидуальный подход к клиентам являются основой для выстраивания долгосрочного и эффективного сотрудничества с предприятиями радиоэлектронной промышленности, предприятиями ВПК и научно-исследовательскими институтами России.

С нами вы становитесь еще успешнее!

**Наши контакты:**

**Телефон:** +7 812 627 14 35

**Электронная почта:** sales@st-electron.ru

**Адрес:** 198099, Санкт-Петербург, Промышленная ул, дом № 19, литера Н, помещение 100-Н Офис 331