RFMD

rfmd.com

SGA3563Z

DC to 5000 MHz, CASCADABLE SiGe HBT MMIC AMPLIFIER

Package: SOT-363

Product Description

The SGA3563Z is a high performance SiGe HBT MMIC Amplifier. A Darlington configuration featuring one-micron emitters provides high F_T and excellent thermal performance. The heterojunction increases breakdown voltage and minimizes leakage current between junctions. Cancellation of emitter junction non-linearities results in higher suppression of intermodulation products. Only two DC-blocking capacitors, a bias resistor, and an optional RF choke are required for operation.

Optimum Technology Matching® Applied

- ☐ GaAs HBT
- ☐ GaAs MESFET
- ☐ InGaP HBT
- ☐ SiGe BiCMOS
- ☐ Si BiCMOS
- ☑ SiGe HBT
- ☐ GaAs pHEMT
- ☐ Si CMOS
- ☐ Si BJT
- ☐ GaN HEMT
- ☐ RF MEMS

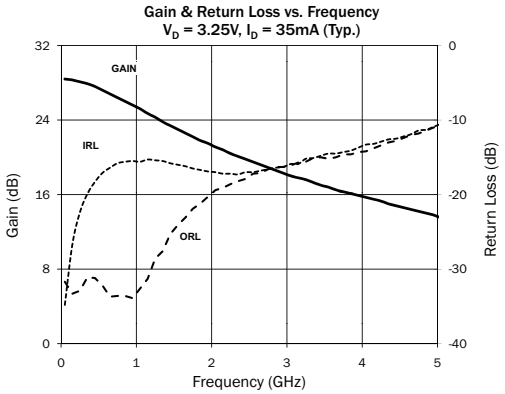

Features

- High Gain: 25.5 dB at 850 MHz
- Cascadable 50Ω Gain Block
- High Output IP_3: 24.5 dBm typ. at 1950 MHz
- Low Noise Figure: 2.7 dB typ. at 1950 MHz
- Low Current Draw: 35 mA typ.
- Single Voltage Supply Operation

Applications

- PA Driver Amplifier
- Cellular, PCS, GSM, UMTS
- IF Amplifier
- Wireless Data, Satellite

Parameter	Specification			Unit	Condition
	Min.	Typ.	Max.		
Small Signal Gain	23.5	25.5	27.5	dB	850 MHz
	19.5	21.5	23.5	dB	1950 MHz
		20.0		dB	2400 MHz
Output Power at 1dB Compression		13.0		dBm	850 MHz
	11.0	12.5		dBm	1950 MHz
Output Third Intercept Point		24.0		dBm	850 MHz
	22.5	24.5		dBm	1950 MHz
Bandwidth Determined by Return Loss		5000		MHz	>10 dB
Input Return Loss	11.2	15.5		dB	1950 MHz
Output Return Loss	11.2	20.0		dB	1950 MHz
Noise Figure		2.7	3.7	dB	1950 MHz
Device Operating Voltage	3.0	3.25	3.5	V	
Device Operating Current	31	35	39	mA	
Thermal Resistance (Junction - Lead)		255		°C/W	

Test Conditions: I_D = 35 mA Typ., T_L = 25 °C, Z_S = Z_L = 50Ω, P_{OUT} per tone = -5 dBm, OIP_3 Tone Spacing = 1 MHz

RF MICRO DEVICES®, RFMD®, Optimum Technology Matching®, Enabling Wireless Connectivity™, PowerStar®, POLARIS™ TOTAL RADIO™ and UltimateBlue™ are trademarks of RFMD, LLC. BLUETOOTH is a trademark owned by Bluetooth SIG, Inc., U.S.A. and licensed for use by RFMD. All other trade names, trademarks and registered trademarks are the property of their respective owners. ©2006, RF Micro Devices, Inc.

7628 Thorndike Road, Greensboro, NC 27409-9421 · For sales or technical support, contact RFMD at (+1) 336-678-5570 or sales-support@rfmd.com.

Absolute Maximum Ratings

Parameter	Rating	Unit
Max Device Current (I_D)	70	mA
Max Device Voltage (V_D)	6	V
Max RF Input Power	+18	dBm
Max Junction Temp (T_J)	+150	°C
Operating Temp Range (T_L)	-40 to +85	°C
Max Storage Temp	+150	°C
ESD Rating - Human Body Model (HBM)	Class 1A	
Moisture Sensitivity Level (MSL)	MSL 1	

Operation of this device beyond any one of these limits may cause permanent damage. For reliable continuous operation, the device voltage and current must not exceed the maximum operating values specified in the table on page one.
Bias Conditions should also satisfy the following expression:
$I_D V_D < (T_J - T_L) / R_{TH}$, j-l

Caution! ESD sensitive device.

Exceeding any one or a combination of the Absolute Maximum Rating conditions may cause permanent damage to the device. Extended application of Absolute Maximum Rating conditions to the device may reduce device reliability. Specified typical performance or functional operation of the device under Absolute Maximum Rating conditions is not implied.

The information in this publication is believed to be accurate and reliable. However, no responsibility is assumed by RF Micro Devices, Inc. ("RFMD") for its use, nor for any infringement of patents, or other rights of third parties, resulting from its use. No license is granted by implication or otherwise under any patent or patent rights of RFMD. RFMD reserves the right to change component circuitry, recommended application circuitry and specifications at any time without prior notice.

RFMD Green: RoHS compliant per EU Directive 2002/95/EC, halogen free per IEC 61249-2-21, < 1000 ppm each of antimony trioxide in polymeric materials and red phosphorus as a flame retardant, and <2% antimony in solder.

Typical Performance at Key Operating Frequencies

Parameter	Unit	100 MHz	500 MHz	850 MHz	1950 MHz	2400 MHz	3500 MHz
Small Signal Gain	dB	28.5	27.5	25.5	21.5	20.0	17.0
Output Third Order Intercept Point	dBm	24.0	23.6	24.0	24.5	24.0	22.0
Output Power at 1dB Compression	dBm	13.0	13.0	13.0	12.5	12.0	10.0
Input Return Loss	dB	29.7	17.6	15.6	15.5	17.2	14.7
Output Return Loss	dB	31.8	31.1	33.6	20.0	17.9	15.0
Reverse Isolation	dB	29.4	29.3	28.6	25.5	23.9	21.3
Noise Figure	dB	2.3	2.3	2.3	2.7		

Test Conditions: I_D = 35 mA Typ., OIP_3 Tone Spacing = 1 MHz, P_{OUT} per tone = -5 dBm, R_{BIAS} = 100 Ω, T_L = 25 °C, $Z_S = Z_L$ = 50 Ω

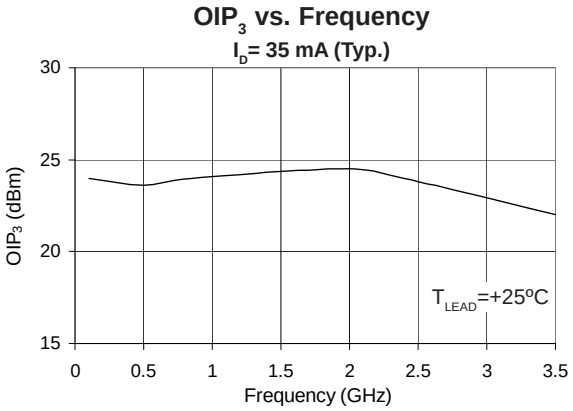
OIP3 vs. Frequency
ID= 35 mA (Typ.)
OIP3 (dBm)
30
25
20
15
0
0.5
1
1.5
2
2.5
3
3.5
Frequency (GHz)
TLEAD=+25ºC

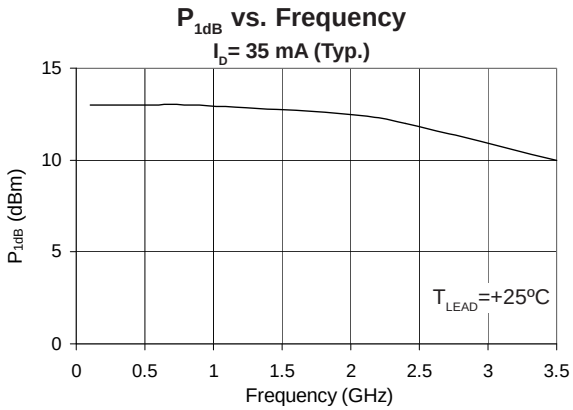
P1dB vs. Frequency
ID= 35 mA (Typ.)
P1dB (dBm)
15
10
5
0
0
0.5
1
1.5
2
2.5
3
3.5
Frequency (GHz)
TLEAD=+25ºC

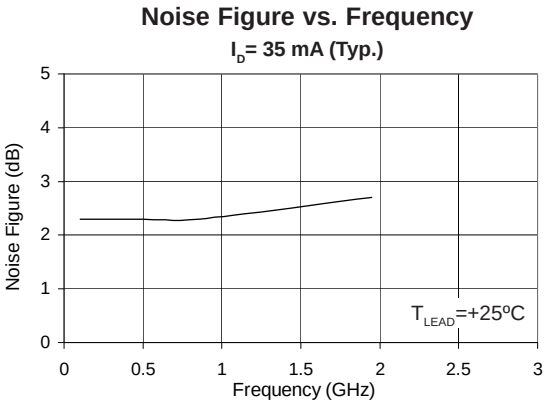
Noise Figure vs. Frequency
ID= 35 mA (Typ.)
Noise Figure (dB)
5
4
3
2
1
0
0
0.5
1
1.5
2
2.5
3
Frequency (GHz)
TLEAD=+25ºC

Typical RF Performance Over Lead Temperature – Bias: ID= 35 mA (Typ.) at TLEAD = +25ºC

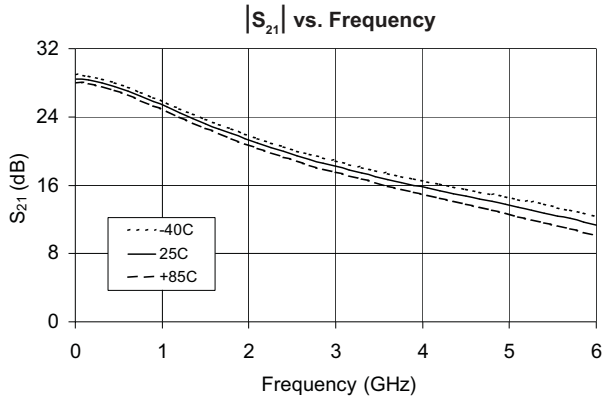

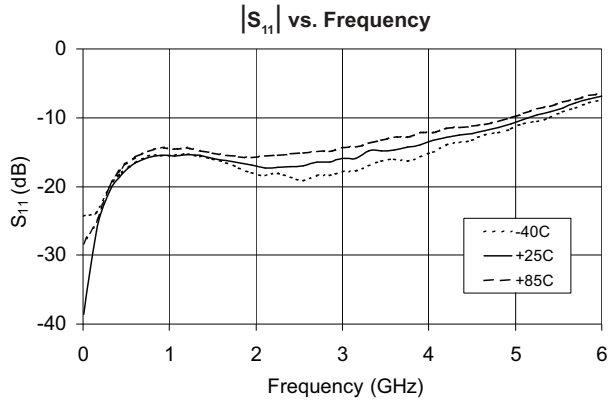

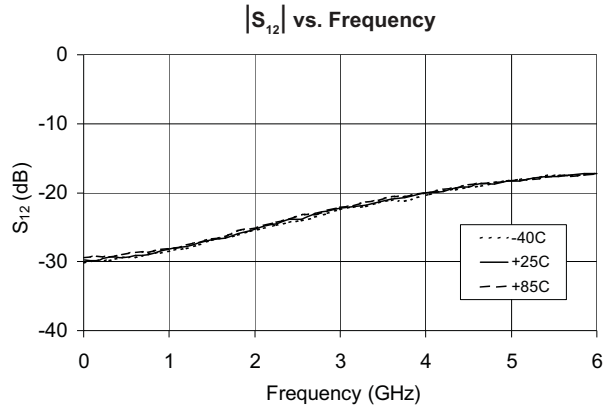

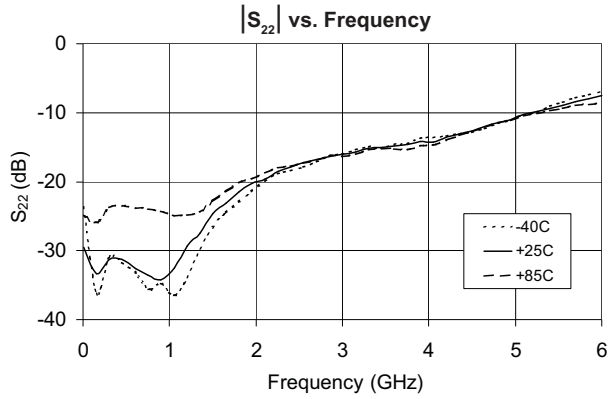

7628 Thorndike Road, Greensboro, NC 27409-9421 · For sales or technical support, contact RFMD at (+1) 336-678-5570 or sales-support@rfmd.com.

Pin	Function	Description
3	RF IN	RF input pin. This pin requires the use of an external DC-blocking capacitor chosen for the frequency of operation.
1, 2, 4, 5	GND	Connection to ground. For optimum RF performance, use via holes as close to ground leads as possible to reduce lead inductance.
6	RF OUT/BIAS	RF output and bias pin. DC voltage is present on this pin, therefor a DC-blocking capacitor is necessary for proper operation.

Suggested Pad Layout

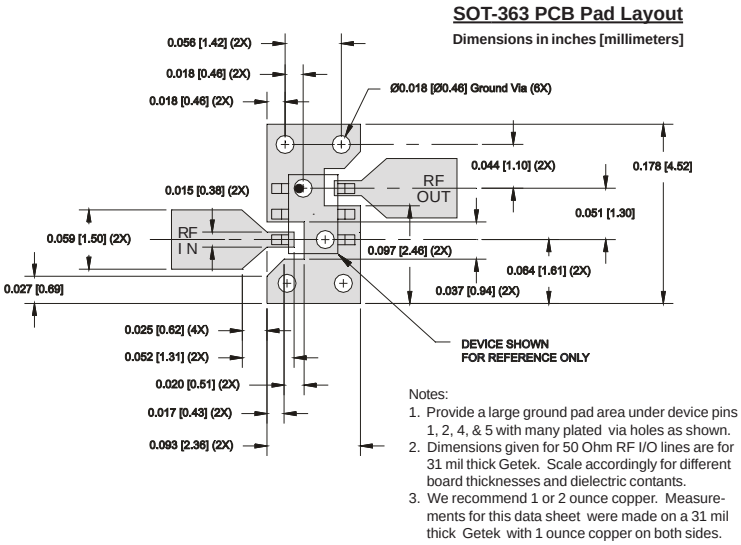

Notes:
1. Provide a large ground pad area under device pins 1, 2, 4, & 5 with many plated via holes as shown.
2. Dimensions given for 50 Ohm RF I/O lines are for 31 mil thick Getek. Scale accordingly for different board thicknesses and dielectric contants.
3. We recommend 1 or 2 ounce copper. Measurements for this data sheet were made on a 31 mil thick Getek with 1 ounce copper on both sides.

Package Drawing

Dimensions in inches (millimeters)

Refer to drawing posted at www.rfmd.com for tolerances.

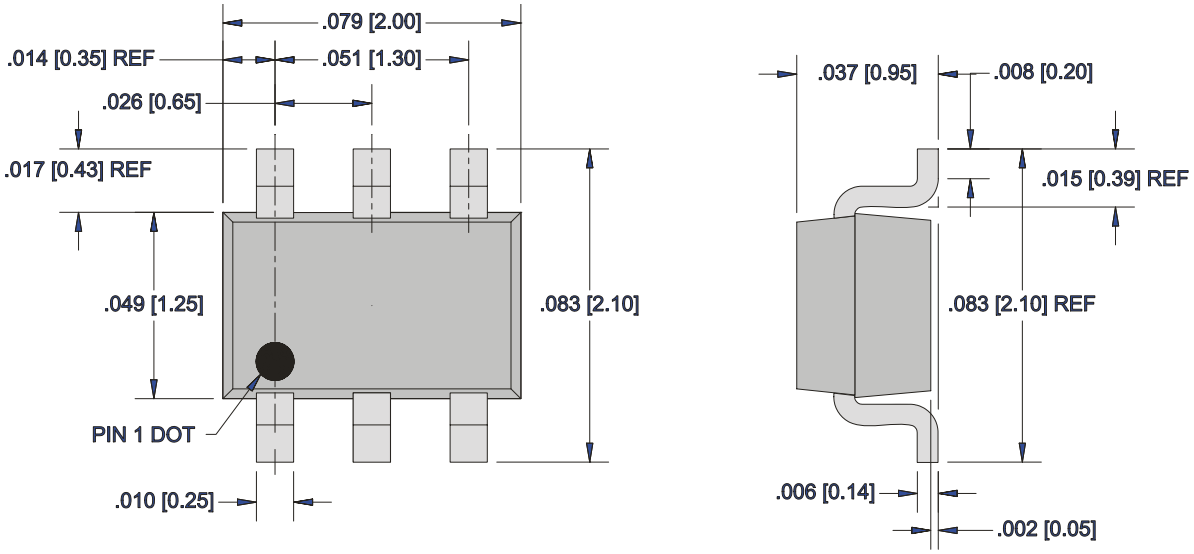

RFMD
rfmd.com

Application Schematic

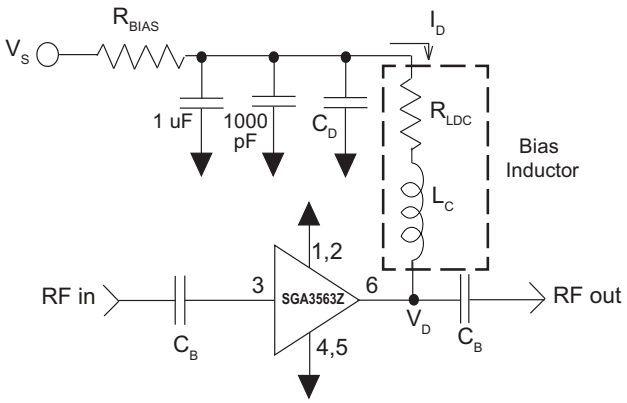

Application Circuit Element Values						
Reference Designator	Frequency (Mhz)					
	100	500	850	1950	2400	3500
C_B	1000 pF	220 pF	100 pF	68 pF	56 pF	39 pF
C_D	100 pF	100 pF	68 pF	22 pF	22 pF	15 pF
L_C	470 nH	68 nH	33 nH	22 nH	18 nH	15 nH

Recommended Bias Resistance for I_D = 35 mA							
Supply Voltage (V_S) (Volts)	< 5	5	6	7	8	9	10
Bias Resistance* (Ohms)	N/R	50	79	107	136	164	193

*** Bias Resistance = R_{BIAS} + R_{LDC} = (V_S-V_D) / I_D**

Select **R_{BIAS}** so that **R_{BIAS}** + **R_{LDC}** ~ the recommended bias resistance. Use 1% or 5 % tolerance resisistors or parallel combinations to attain the recommended bias resistance +/- 3%. **R_{BIAS}** provides current stability over temperature.

* N/R=Not Recommended. Contact Sirenza technical support for guidance when available supply voltage is less than 5 Volts.

Evaluation Board Layout

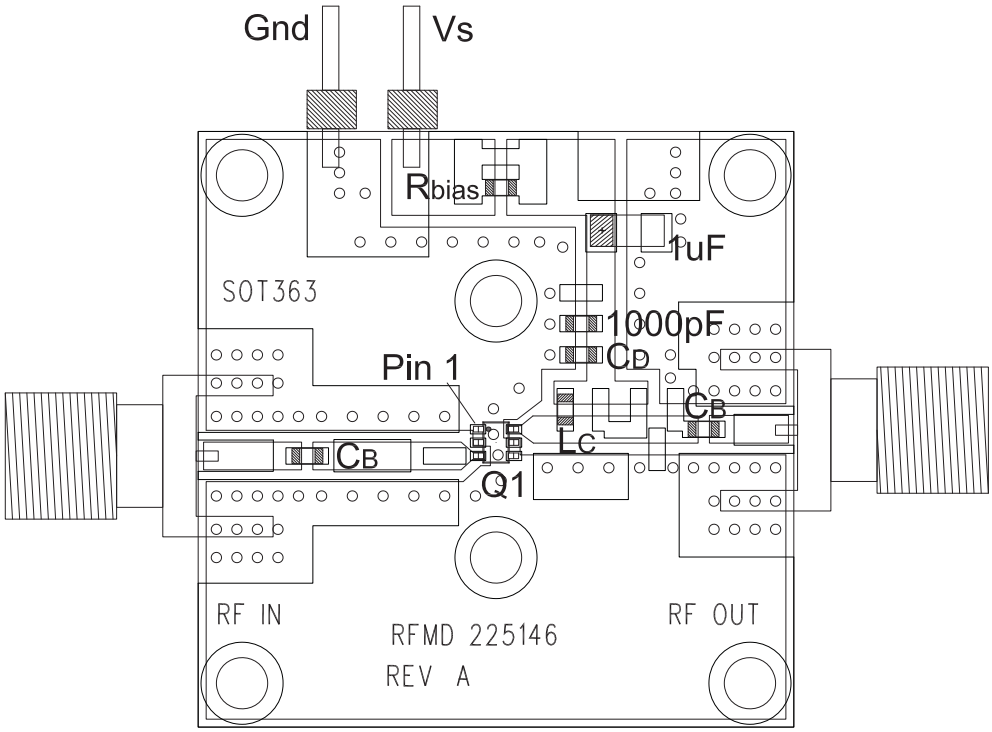

7628 Thorndike Road, Greensboro, NC 27409-9421 · For sales or technical support, contact RFMD at (+1) 336-678-5570 or sales-support@rfmd.com.

Part Identification

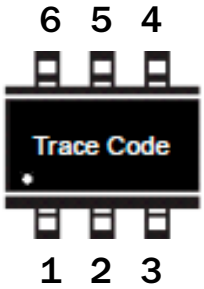

Ordering Information

Ordering Code	Description
SGA3563Z	7" Reel with 3000 pieces
SGA3563ZSQ	Sample Bag with 25 pieces
SGA3563ZSR	7” Reel with 100 pieces
SGA3563ZPCK1	850MHz, 5V Operation PCBA with 5-piece sample bag

Мы молодая и активно развивающаяся компания в области поставок электронных компонентов. Мы поставляем электронные компоненты отечественного и импортного производства напрямую от производителей и с крупнейших складов мира.

Благодаря сотрудничеству с мировыми поставщиками мы осуществляем комплексные и плановые поставки широчайшего спектра электронных компонентов.

Собственная эффективная логистика и склад в обеспечивает надежную поставку продукции в точно указанные сроки по всей России.

Мы осуществляем техническую поддержку нашим клиентам и предпродажную проверку качества продукции. На все поставляемые продукты мы предоставляем гарантию .

Осуществляем поставки продукции под контролем ВП МО РФ на предприятия военно-промышленного комплекса России , а также работаем в рамках 275 ФЗ с открытием отдельных счетов в уполномоченном банке. Система менеджмента качества компании соответствует требованиям ГОСТ ISO 9001.

Минимальные сроки поставки, гибкие цены, неограниченный ассортимент и индивидуальный подход к клиентам являются основой для выстраивания долгосрочного и эффективного сотрудничества с предприятиями радиоэлектронной промышленности, предприятиями ВПК и научно-исследовательскими институтами России.

С нами вы становитесь еще успешнее!

Наши контакты:

Телефон: +7 812 627 14 35

Электронная почта: sales@st-electron.ru

Адрес: 198099, Санкт-Петербург, Промышленная ул, дом № 19, литера Н, помещение 100-Н Офис 331