74LV123

Dual retriggerable monostable multivibrator with reset

Rev. 8 — 4 March 2016 Product data sheet

1. General description

The 74LV123 is a low-voltage Si-gate CMOS device and is pin and function compatible with the 74HC123; 74HCT123. It is a dual retriggerable monostable multivibrator which uses three methods to control the output pulse width:

1. The basic pulse time is programmed by the selection of an external resistor (R_{EXT}) and capacitor (C_{EXT}). These are normally connected as shown in Figure 9.
2. Once triggered, the basic output pulse width may be extended by retriggering the gated active LOW-going edge input ($n\overline{A}$) or the active HIGH-going edge input (nB). By repeating this process, the output pulse period (nQ = HIGH, $n\overline{Q}$ = LOW) can be made as long as desired (see Figure 12).
3. Alternatively, an output delay can be terminated at any time by a LOW-going edge on input $n\overline{R}D$, which also inhibits the triggering (see Figure 13).

Schmitt-trigger action in the $n\overline{A}$ and nB inputs makes the circuit highly tolerant of slower input rise and fall times.

2. Features and benefits

- Optimized for low-voltage applications: 1.0 V to 5.5 V
- Accepts TTL input levels between V_{CC} = 2.7 V and V_{CC} = 3.6 V
- Typical output ground bounce: < 0.8 V at V_{CC} = 3.3 V and T_{amb} = 25 °C
- Typical HIGH-level output voltage (V_{OH}) undershoot: > 2 V at V_{CC} = 3.3 V and T_{amb} = 25 °C
- DC triggered from active HIGH or active LOW inputs
- Retriggerable for very long pulses up to 100 % duty factor
- Direct reset terminates output pulses
- Schmitt-trigger action on all inputs except for the reset input

3. Ordering information

Table 1. Ordering information

Type number	Package			
	Temperature range	Name	Description	Version
74LV123D	–40 °C to +125 °C	SO16	plastic small outline package; 16 leads; body width 3.9 mm	SOT109-1
74LV123DB	–40 °C to +125 °C	SSOP16	plastic shrink small outline package; 16 leads; body width 5.3 mm	SOT338-1
74LV123PW	–40 °C to +125 °C	TSSOP16	plastic thin shrink small outline package; 16 leads; body width 4.4 mm	SOT403-1
74LV123BQ	–40 °C to +125 °C	DHVQFN16	plastic dual in-line compatible thermal enhanced very thin quad flat package; no leads; 16 terminals; body 2.5 × 3.5 × 0.85 mm	SOT763-1

4. Functional diagram

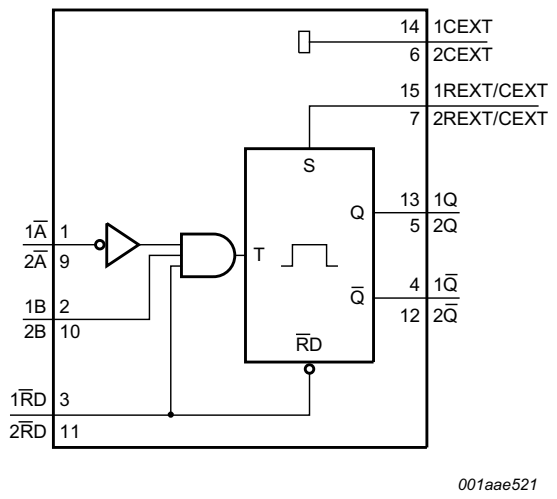

Fig 1. Logic symbol

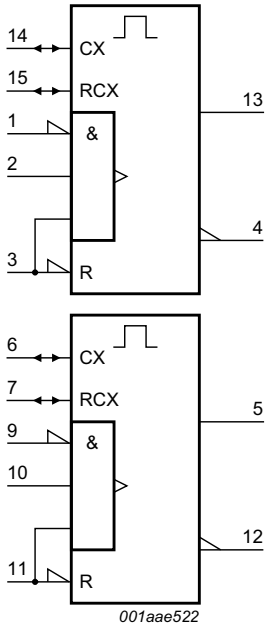

Fig 2. IEC logic symbol

All information provided in this document is subject to legal disclaimers.

© Nexperia B.V. 2017. All rights reserved

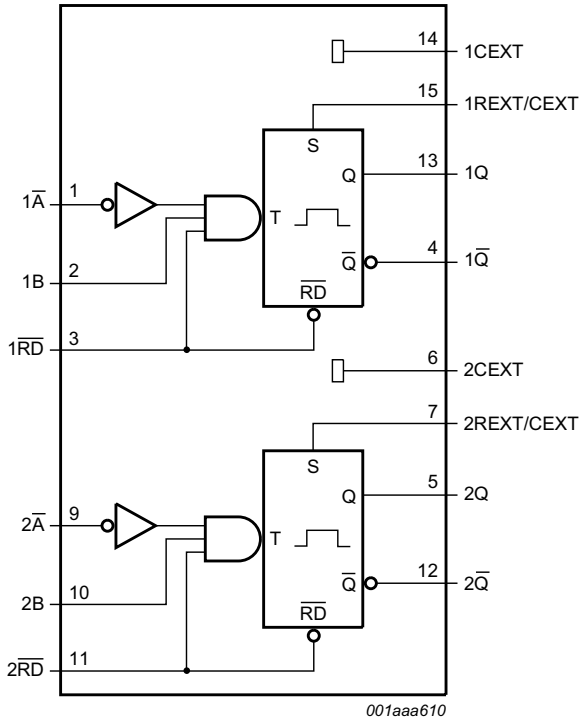

Fig 3. Functional diagram

All information provided in this document is subject to legal disclaimers.

© Nexperia B.V. 2017. All rights reserved

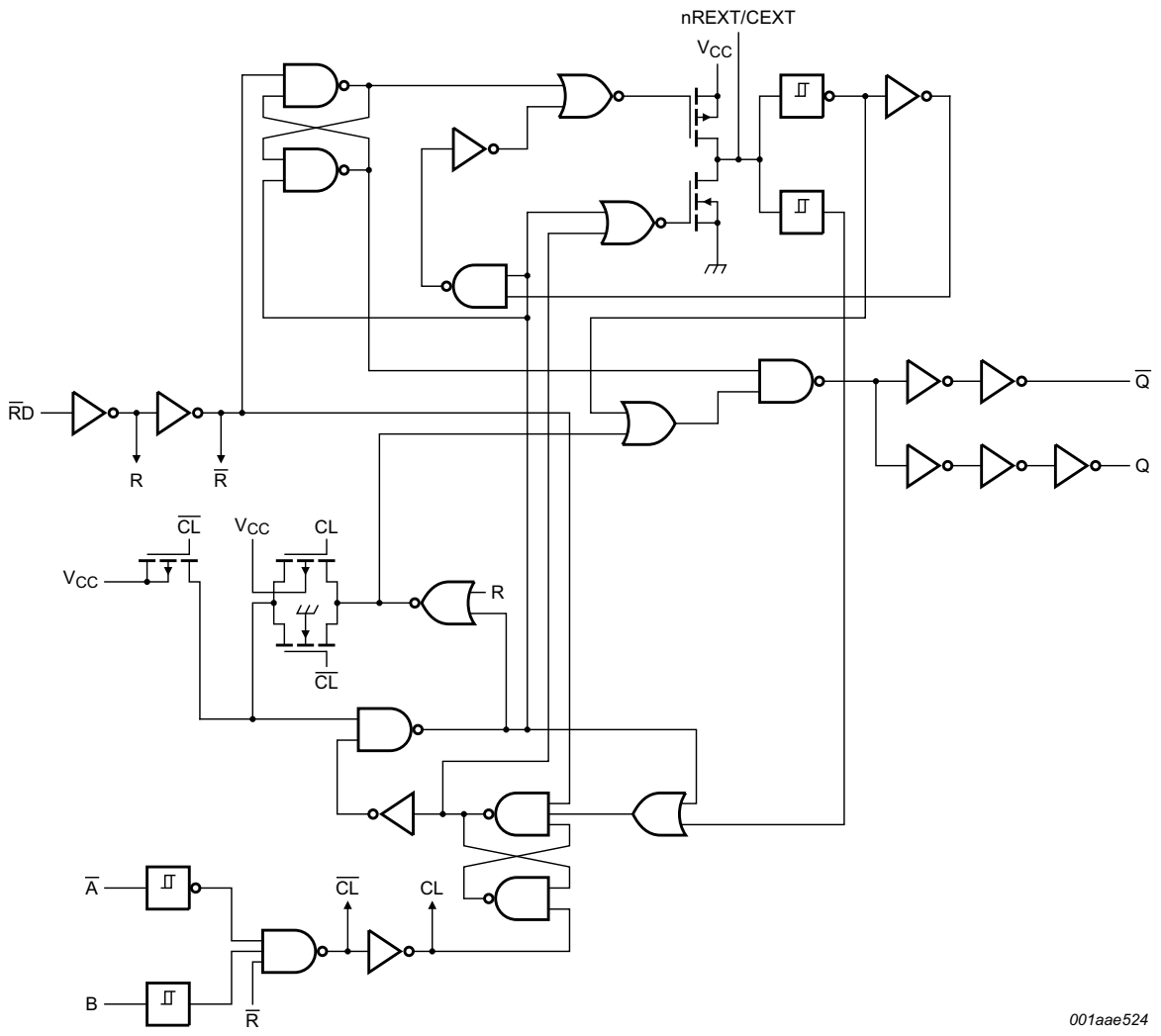

Fig 4. Logic diagram

All information provided in this document is subject to legal disclaimers.

© Nexperia B.V. 2017. All rights reserved

5. Pinning information

5.1 Pinning

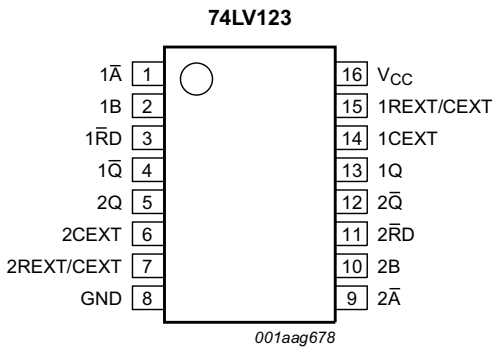

Fig 5. Pin configuration for SO16 and (T)SSOP16

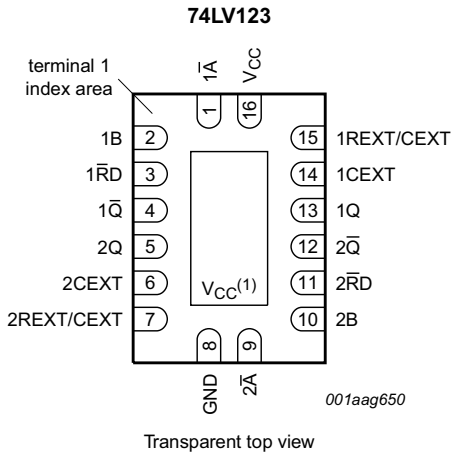

(1) This is not a supply pin. The substrate is attached to this pad using conductive die attach material. There is no electrical or mechanical requirement to solder this pad. However, if it is soldered, the solder land should remain floating or be connected to V_{CC}.

Fig 6. Pin configuration for DHVQFN16

5.2 Pin description

Table 2. Pin description

Symbol	Pin	Description
1Ā	1	negative-edge triggered input 1
1B	2	positive-edge triggered input 1
1R̄D	3	direct reset LOW and positive-edge triggered input 1
1Q̄	4	active LOW output 1
2Q	5	active HIGH output 2
2CEXT	6	external capacitor connection 2
2REXT/CEXT	7	external resistor and capacitor connection 2
GND	8	ground (0 V)
2Ā	9	negative-edge triggered input 2
2B	10	positive-edge triggered input 2
2R̄D	11	direct reset LOW and positive-edge triggered input 2
2Q̄	12	active LOW output 2
1Q	13	active HIGH output 1
1CEXT	14	external capacitor connection 1
1REXT/CEXT	15	external resistor and capacitor connection 1
V_{CC}	16	supply voltage

All information provided in this document is subject to legal disclaimers.

© Nexperia B.V. 2017. All rights reserved

6. Functional description

Table 3. Function table[1]

Input			Output	
n$\overline{RD}$	**n$\overline{A}$**	**nB**	**nQ**	**n$\overline{Q}$**
L	X	X	L	H
X	H	X	L[2]	H[2]
X	X	L	L[2]	H[2]
H	L	↑	⎍	⎎
H	↓	H	⎍	⎎
↑	L	H	⎍	⎎

[1] H = HIGH voltage level;
L = LOW voltage level;
X = don't care;
↑ = LOW-to-HIGH transition;
↓ = HIGH-to-LOW transition;
⎍ = one HIGH level output pulse
⎎ = one LOW level output pulse

[2] If the monostable multivibrator was triggered before this condition was established, the pulse will continue as programmed.

All information provided in this document is subject to legal disclaimers.

© Nexperia B.V. 2017. All rights reserved

7. Limiting values

Table 4. Limiting values

In accordance with the Absolute Maximum Rating System (IEC 60134). Voltages are referenced to GND (ground = 0 V).

Symbol	Parameter	Conditions		Min	Max	Unit
V_{CC}	supply voltage			–0.5	+7	V
I_{IK}	input clamping current	V_I < –0.5 V or V_I > V_{CC} + 0.5 V	[1]	-	±20	mA
I_{OK}	output clamping current	V_O < –0.5 V or V_O > V_{CC} + 0.5 V	[1]	-	±50	mA
I_O	output current	except for pins nREXT/CEXT; V_O = –0.5 V to (V_{CC} + 0.5 V)	[1]	-	±25	mA
I_{CC}	supply current			-	+50	mA
I_{GND}	ground current			–50	-	mA
T_{stg}	storage temperature			–65	+150	°C
P_{tot}	total power dissipation	T_{amb} = –40 °C to +125 °C				
		SO16 package	[2]	-	500	mW
		SSOP16 package	[3]	-	500	mW
		TSSOP16 package	[3]	-	500	mW
		DHVQFN16 package	[4]	-	500	mW

[1] The input and output voltage ratings may be exceeded if the input and output current ratings are observed.

[2] For SO16 package: P_{tot} derates linearly with 8 mW/K above 70 °C.

[3] For SSOP16 and TSSOP16 packages: P_{tot} derates linearly with 5.5 mW/K above 60 °C.

[4] For DHVQFN16 package: P_{tot} derates linearly with 4.5 mW/K above 60 °C.

8. Recommended operating conditions

Table 5. Recommended operating conditions

Symbol	Parameter	Conditions		Min	Typ	Max	Unit
V_{CC}	supply voltage		[1]	1.0	3.3	5.5	V
V_I	input voltage			0	-	V_{CC}	V
V_O	output voltage			0	-	V_{CC}	V
T_{amb}	ambient temperature	in free air		–40	+25	+125	°C
$\Delta t/\Delta V$	input transition rise and fall rate	V_{CC} = 1.0 V to 2.0 V	[2]	-	-	500	ns/V
		V_{CC} = 2.0 V to 2.7 V		-	-	200	ns/V
		V_{CC} = 2.7 V to 3.6 V		-	-	100	ns/V
		V_{CC} = 3.6 V to 5.5 V		-	-	50	ns/V

[1] The 74LV123 is guaranteed to function down to V_{CC} = 1.0 V (input levels GND or V_{CC}); Section 9 "Static characteristics" are guaranteed from V_{CC} = 1.2 V to V_{CC} = 5.5 V.

[2] Except for Schmitt-trigger inputs n$\overline{A}$ and nB.

All information provided in this document is subject to legal disclaimers.

© Nexperia B.V. 2017. All rights reserved

9. Static characteristics

Table 6. Static characteristics

At recommended operating conditions; voltages are referenced to GND (ground = 0 V).

Symbol	Parameter	Conditions	Min	Typ[1]	Max	Unit
T_{amb} = –40 °C to +85 °C						
V_{IH}	HIGH-level input voltage	V_{CC} = 1.2 V	0.9	-	-	V
		V_{CC} = 2.0 V	1.4	-	-	V
		V_{CC} = 2.7 V to 3.6 V	2.0	-	-	V
		V_{CC} = 4.5 V to 5.5 V	0.7 × V_{CC}	-	-	V
V_{IL}	LOW-level input voltage	V_{CC} = 1.2 V	-	-	0.3	V
		V_{CC} = 2.0 V	-	-	0.6	V
		V_{CC} = 2.7 V to 3.6 V	-	-	0.8	V
		V_{CC} = 4.5 V to 5.5 V	-	-	0.3 × V_{CC}	V
V_{OH}	HIGH-level output voltage	V_I = V_{IH} or V_{IL}				
		I_O = –100 μA; V_{CC} = 1.2 V	-	1.2	-	V
		I_O = –100 μA; V_{CC} = 2.0 V	1.8	2.0	-	V
		I_O = –100 μA; V_{CC} = 2.7 V	2.5	2.7	-	V
		I_O = –100 μA; V_{CC} = 3.0 V	2.8	3.0	-	V
		I_O = –100 μA; V_{CC} = 4.5 V	4.3	4.5	-	V
		I_O = –6 mA; V_{CC} = 3.0 V	2.40	2.82	-	V
		I_O = –12 mA; V_{CC} = 4.5 V	3.60	4.20	-	V
V_{OL}	LOW-level output voltage	V_I = V_{IH} or V_{IL}				
		I_O = 100 μA; V_{CC} = 1.2 V	-	0	-	V
		I_O = 100 μA; V_{CC} = 2.0 V	-	0	0.2	V
		I_O = 100 μA; V_{CC} = 2.7 V	-	0	0.2	V
		I_O = 100 μA; V_{CC} = 3.0 V	-	0	0.2	V
		I_O = 100 μA; V_{CC} = 4.5 V	-	0	0.2	V
		I_O = 6 mA; V_{CC} = 3.0 V	-	0.25	0.40	V
		I_O = 12 mA; V_{CC} = 4.5 V	-	0.35	0.55	V
I_I	input leakage current	V_I = V_{CC} or GND; V_{CC} = 5.5 V	-	-	1.0	μA
I_{CC}	supply current	V_I = V_{CC} or GND; I_O = 0 A; V_{CC} = 5.5 V	-	-	20.0	μA
ΔI_{CC}	additional supply current	V_I = V_{CC} – 0.6 V; V_{CC} = 2.7 V to 3.6 V	-	-	500	μA
C_I	input capacitance		-	3.5	-	pF

All information provided in this document is subject to legal disclaimers.

© Nexperia B.V. 2017. All rights reserved

Table 6. Static characteristics *...continued*

At recommended operating conditions; voltages are referenced to GND (ground = 0 V).

Symbol	Parameter	Conditions	Min	Typ[1]	Max	Unit
T_{amb} = –40 °C to +125 °C						
V_{IH}	HIGH-level input voltage	V_{CC} = 1.2 V	0.9	-	-	V
		V_{CC} = 2.0 V	1.4	-	-	V
		V_{CC} = 2.7 V to 3.6 V	2.0	-	-	V
		V_{CC} = 4.5 V to 5.5 V	0.7 × V_{CC}	-	-	V
V_{IL}	LOW-level input voltage	V_{CC} = 1.2 V	-	-	0.3	V
		V_{CC} = 2.0 V	-	-	0.6	V
		V_{CC} = 2.7 V to 3.6 V	-	-	0.8	V
		V_{CC} = 4.5 V to 5.5 V	-	-	0.3 × V_{CC}	V
V_{OH}	HIGH-level output voltage	V_I = V_{IH} or V_{IL}				
		I_O = –100 μA; V_{CC} = 1.2 V	-	-	-	V
		I_O = –100 μA; V_{CC} = 2.0 V	1.8	-	-	V
		I_O = –100 μA; V_{CC} = 2.7 V	2.5	-	-	V
		I_O = –100 μA; V_{CC} = 3.0 V	2.8	-	-	V
		I_O = –100 μA; V_{CC} = 4.5 V	4.3	-	-	V
		I_O = –6 mA; V_{CC} = 3.0 V	2.2	-	-	V
		I_O = –12 mA; V_{CC} = 4.5 V	3.5	-	-	V
V_{OL}	LOW-level output voltage	V_I = V_{IH} or V_{IL}				
		I_O = 100 μA; V_{CC} = 1.2 V	-	-	-	V
		I_O = 100 μA; V_{CC} = 2.0 V	-	-	0.2	V
		I_O = 100 μA; V_{CC} = 2.7 V	-	-	0.2	V
		I_O = 100 μA; V_{CC} = 3.0 V	-	-	0.2	V
		I_O = 100 μA; V_{CC} = 4.5 V	-	-	0.2	V
		I_O = 6 mA; V_{CC} = 3.0 V	-	-	0.5	V
		I_O = 12 mA; V_{CC} = 4.5 V	-	-	0.65	V
I_I	input leakage current	V_I = V_{CC} or GND; V_{CC} = 5.5 V	-	-	1.0	μA
I_{CC}	supply current	V_I = V_{CC} or GND; I_O = 0 A; V_{CC} = 5.5 V	-	-	160	μA
ΔI_{CC}	additional supply current	V_I = V_{CC} – 0.6 V; V_{CC} = 2.7 V to 3.6 V	-	-	850	μA

[1] All typical values are measured at T_{amb} = 25 °C.

All information provided in this document is subject to legal disclaimers.

© Nexperia B.V. 2017. All rights reserved

10. Dynamic characteristics

Table 7. Dynamic characteristics

GND = 0 V; $t_r = t_f \leq 2.5$ ns; for test circuit see Figure 8.

Symbol	Parameter	Conditions	–40 °C to +85 °C			–40 °C to +125 °C		Unit
			Min	Typ[1]	Max	Min	Max	
Propagation delay; see Figure 7								
t_{pd}	propagation delay	$n\overline{RD}$, $n\overline{A}$ and nB to $n\overline{Q}$ [2]						
		V_{CC} = 1.2 V	-	120	-	-	-	ns
		V_{CC} = 2.0 V	-	40	76	-	92	ns
		V_{CC} = 2.7 V	-	30	56	-	68	ns
		V_{CC} = 3.0 V to 3.6 V	-	25	48	-	57	ns
		V_{CC} = 4.5 V to 5.5 V	-	18	40	-	46	ns
		$n\overline{RD}$ to nQ (reset) [2]						
		V_{CC} = 1.2 V	-	100	-	-	-	ns
		V_{CC} = 2.0 V	-	30	57	-	68	ns
		V_{CC} = 2.7 V	-	23	43	-	51	ns
		V_{CC} = 3.0 V to 3.6 V	-	20	38	-	45	ns
		V_{CC} = 4.5 V to 5.5 V	-	14	31	-	36	ns
Inputs $n\overline{A}$, nB and $n\overline{RD}$; see Figure 7								
t_W	pulse width	$n\overline{A}$ = LOW						
		V_{CC} = 2.0 V	30	5	-	40	-	ns
		V_{CC} = 2.7 V	25	3.5	-	30	-	ns
		V_{CC} = 3.0 V to 3.6 V	20	3.0	-	25	-	ns
		V_{CC} = 4.5 V to 5.5 V	15	2.5	-	20	-	ns
		nB = HIGH						
		V_{CC} = 2.0 V	30	13	-	40	-	ns
		V_{CC} = 2.7 V	25	8	-	30	-	ns
		V_{CC} = 3.0 V to 3.6 V	20	7	-	25	-	ns
		V_{CC} = 4.5 V to 5.5 V	15	5	-	20	-	ns
		$n\overline{RD}$ = LOW; see Figure 13						
		V_{CC} = 2.0 V	35	6	-	45	-	ns
		V_{CC} = 2.7 V	30	5	-	40	-	ns
		V_{CC} = 3.0 V to 3.6 V	25	4	-	30	-	ns
		V_{CC} = 4.5 V to 5.5 V	20	3	-	25	-	ns
t_{rtrig}	retrigger time	nB to $n\overline{A}$; see Figure 12						
		V_{CC} = 2.0 V	-	70	-	-	-	ns
		V_{CC} = 2.7 V	-	55	-	-	-	ns
		V_{CC} = 3.0 V to 3.6 V	-	45	-	-	-	ns
		V_{CC} = 4.5 V to 5.5 V	-	40	-	-	-	ns

All information provided in this document is subject to legal disclaimers.

© Nexperia B.V. 2017. All rights reserved

Table 7. Dynamic characteristics *...continued*

GND = 0 V; $t_r = t_f \leq 2.5$ ns; for test circuit see Figure 8.

Symbol	Parameter	Conditions	–40 °C to +85 °C			–40 °C to +125 °C		Unit
			Min	Typ[1]	Max	Min	Max	
Outputs; $n\overline{Q}$ = LOW and nQ = HIGH, see Figure 7								
t_W	pulse width	C_{EXT} = 100 nF; R_{EXT} = 10 kΩ						
		V_{CC} = 2.0 V	-	470	-	-	-	ns
		V_{CC} = 2.7 V	-	460	-	-	-	ns
		V_{CC} = 3.0 V to 3.6 V	-	450	-	-	-	ns
		V_{CC} = 4.5 V to 5.5 V	-	430	-	-	-	ns
		C_{EXT} = 0 pF; R_{EXT} = 5 kΩ						
		V_{CC} = 2.0 V	-	100	-	-	-	ns
		V_{CC} = 2.7 V	-	90	-	-	-	ns
		V_{CC} = 3.0 V to 3.6 V	-	80	-	-	-	ns
		V_{CC} = 4.5 V to 5.5 V	-	70	-	-	-	ns
External components								
R_{EXT}	external resistance	see Figure 11 [3]						
		V_{CC} = 1.2 V	10	-	1000	-	-	kΩ
		V_{CC} = 2.0 V	5	-	1000	-	-	kΩ
		V_{CC} = 2.7 V	3	-	1000	-	-	kΩ
		V_{CC} = 3.0 V to 3.6 V	2	-	1000	-	-	kΩ
		V_{CC} = 4.5 V to 5.5 V	2	-	1000	-	-	kΩ
C_{EXT}	external capacitance	see Figure 11 [3] [4]						
		V_{CC} = 1.2 V	-	-	-	-	-	pF
		V_{CC} = 2.0 V	-	-	-	-	-	pF
		V_{CC} = 2.7 V	-	-	-	-	-	pF
		V_{CC} = 3.0 V to 3.6 V	-	-	-	-	-	pF
		V_{CC} = 4.5 V to 5.5 V	-	-	-	-	-	pF
Dynamic power dissipation								
C_{PD}	power dissipation capacitance	V_{CC} = 3.3 V; V_I = GND to V_{CC} [5]	-	60	-	-	-	pF

[1] All typical values are measured at T_{amb} = 25 °C and nominal supply values (V_{CC} = 3.3 V and 5.0 V).

[2] t_{pd} is the same as t_{PLH} and t_{PHL}; C_{EXT} = 0 pF; R_{EXT} = 5 kΩ.

[3] For other R_{EXT} and C_{EXT} combinations see Figure 11 and Section 12.1.1 "Basic timing".

[4] C_{EXT} has no limits.

[5] C_{PD} is used to determine the dynamic power dissipation (P_D in μW).

$P_D = C_{PD} \times V_{CC}^2 \times f_i \times N + \Sigma(C_L \times V_{CC}^2 \times f_o)$ where:

f_i = input frequency in MHz;

f_o = output frequency in MHz;

C_L = output load capacitance in pF;

V_{CC} = supply voltage in V;

N = number of inputs switching;

$\Sigma(C_L \times V_{CC}^2 \times f_o)$ = sum of the outputs.

All information provided in this document is subject to legal disclaimers.

© Nexperia B.V. 2017. All rights reserved

11. Waveforms

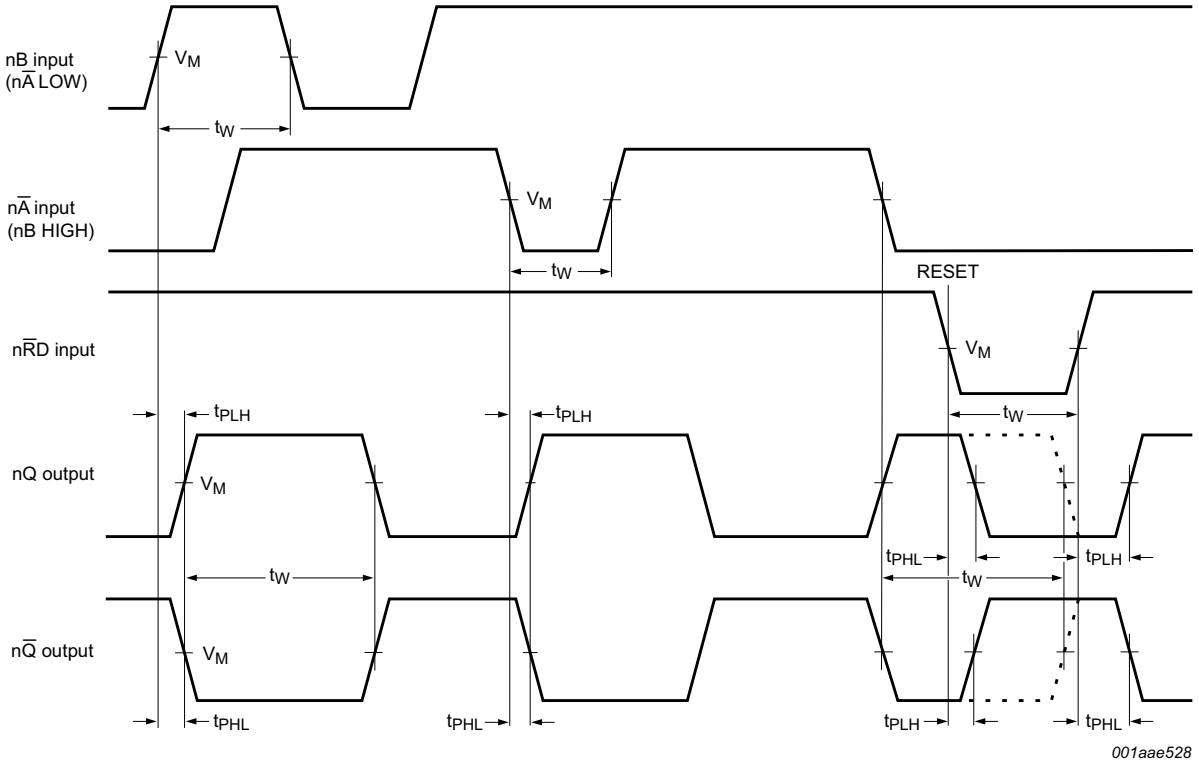

Measurement points are given in Table 8.

Fig 7. Propagation delays from inputs (nA, nB, nRD) to outputs (nQ, nQ)

Table 8. Measurement points

V_{CC}	V_M
≥ 2.7 V	1.5 V
< 2.7 V	0.5 × V_{CC}

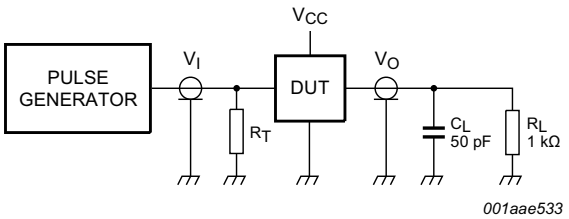

Test data is given in Table 9.

Definitions for test circuit:

R_L = Load resistance.

C_L = Load capacitance including jig and probe capacitance.

R_T = Termination resistance should be equal to Z_o of the pulse generator.

Fig 8. Test circuit for measuring switching times

All information provided in this document is subject to legal disclaimers.

© Nexperia B.V. 2017. All rights reserved

Table 9. Test data

Supply voltage	Input		Load		Test
V_{CC}	V_I	t_r, t_f	C_L	R_L	
< 2.7 V	V_{CC}	≤ 2.5 ns	50 pF	1 kΩ	t_{PHL}, t_{PLH}
2.7 V to 3.6 V	2.7 V	≤ 2.5 ns	50 pF	1 kΩ	t_{PHL}, t_{PLH}
≥ 4.5 V	V_{CC}	≤ 2.5 ns	50 pF	1 kΩ	t_{PHL}, t_{PLH}

12. Application information

12.1 Timing components

12.1.1 Basic timing

The basic output pulse width is essentially determined by the values of the external timing components R_{EXT} and C_{EXT}.

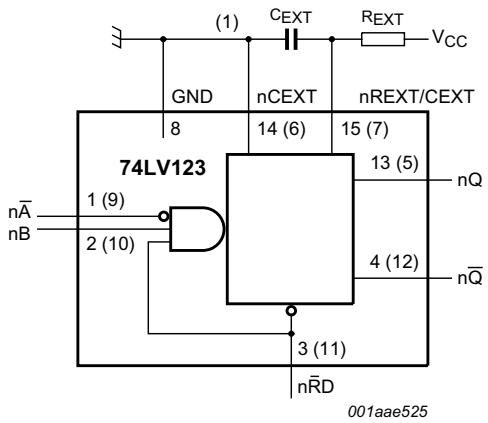

(1) For minimum noise generation it is recommended to ground pins 6 (2CEXT) and 14 (1CEXT) externally to pin 8 (GND).

Fig 9. Timing components connections

If C_{EXT} > 10 nF, the following formula is valid: $t_W = K \times R_{EXT} \times C_{EXT}$ (typ.) where:

t_W = output pulse width in ns

R_{EXT} = external resistor in kΩ

C_{EXT} = external capacitor in pF

K = constant: this is 0.45 for V_{CC} = 5.0 V and 0.48 for V_{CC} = 2.0 V (see Figure 10)

The inherent test jig and pin capacitance at pin 15 and pin 7 (nREXT/CEXT) is approximately 7 pF.

All information provided in this document is subject to legal disclaimers.

© Nexperia B.V. 2017. All rights reserved

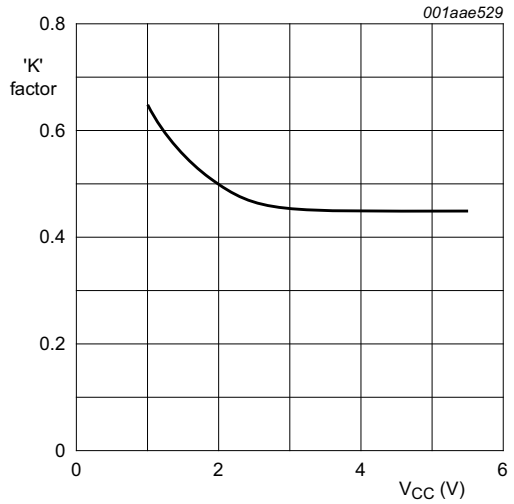

C_{EXT} = 10 nF; R_{EXT} = 10 kΩ to 100 kΩ

Fig 10. Typical 'K' factor as a function of V_{CC}

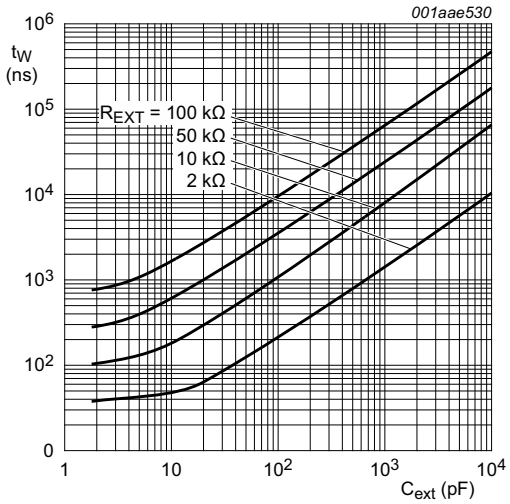

V_{CC} = 3.3 V and T_{amb} = 25 °C

Fig 11. Typical output pulse width as a function of the external capacitance values

12.1.2 Retrigger timing

The time to retrigger the monostable multivibrator depends on the values of R_{EXT} and C_{EXT}. The output pulse width will only be extended when the time between the active going edges of the trigger pulses meets the minimum retrigger time. If C_{EXT} > 10 pF, the next formula for the set-up time of a retrigger pulse is valid:

at V_{CC} = 5.0 V: $t_{rtrig} = 30 + 0.19R_{EXT} \times C_{EXT}^{0.9} + 13 \times R_{EXT1.05}$ (typ.)

at V_{CC} = 3.0 V: $t_{rtrig} = 41 + 0.15R_{EXT} \times C_{EXT}^{0.9} \times 1 \times R_{EXT}$ (typ.)

where:

t_{rtrig} = retrigger time in ns

C_{EXT} = external capacitor in pF

R_{EXT} = external resistor in kΩ

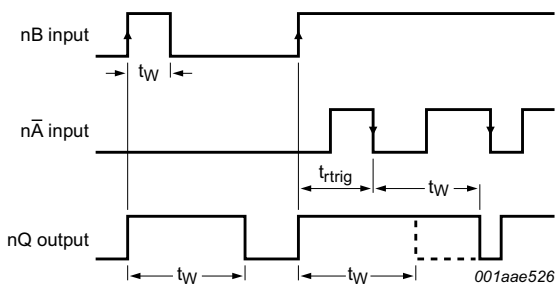

$n\overline{R}D$ = HIGH

Fig 12. Output pulse control using retrigger pulse $n\overline{A}$

All information provided in this document is subject to legal disclaimers.

© Nexperia B.V. 2017. All rights reserved

12.1.3 Reset timing

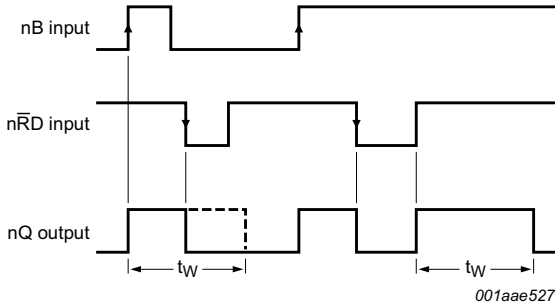

nĀ = LOW

Fig 13. Output pulse control using reset input nR̄D

12.2 Power considerations

12.2.1 Power-up

When the monostable multivibrator is powered-up, it may produce an output pulse with a pulse width defined by the values of R_{EXT} and C_{EXT}. This output pulse can be eliminated using the RC circuit on pin nR̄D shown in Figure 14.

12.2.2 Power-down

A large capacitor (C_{EXT}) may cause problems when powering-down the monostable due to the energy stored in this capacitor. When a system containing this device is powered-down or a rapid decrease of V_{CC} to zero occurs, the monostable may sustain damage, due to the capacitor discharging through the input protection diodes. To avoid this possibility, connect a damping diode D_{EXT} (preferably a germanium or Schottky type diode) able to withstand large current surges - see Figure 14.

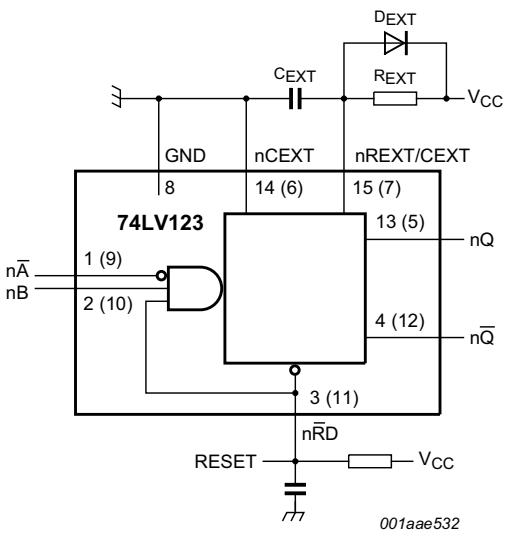

Fig 14. Power-up and power-down circuit

All information provided in this document is subject to legal disclaimers.

© Nexperia B.V. 2017. All rights reserved

13. Package outline

SO16: plastic small outline package; 16 leads; body width 3.9 mm **SOT109-1**

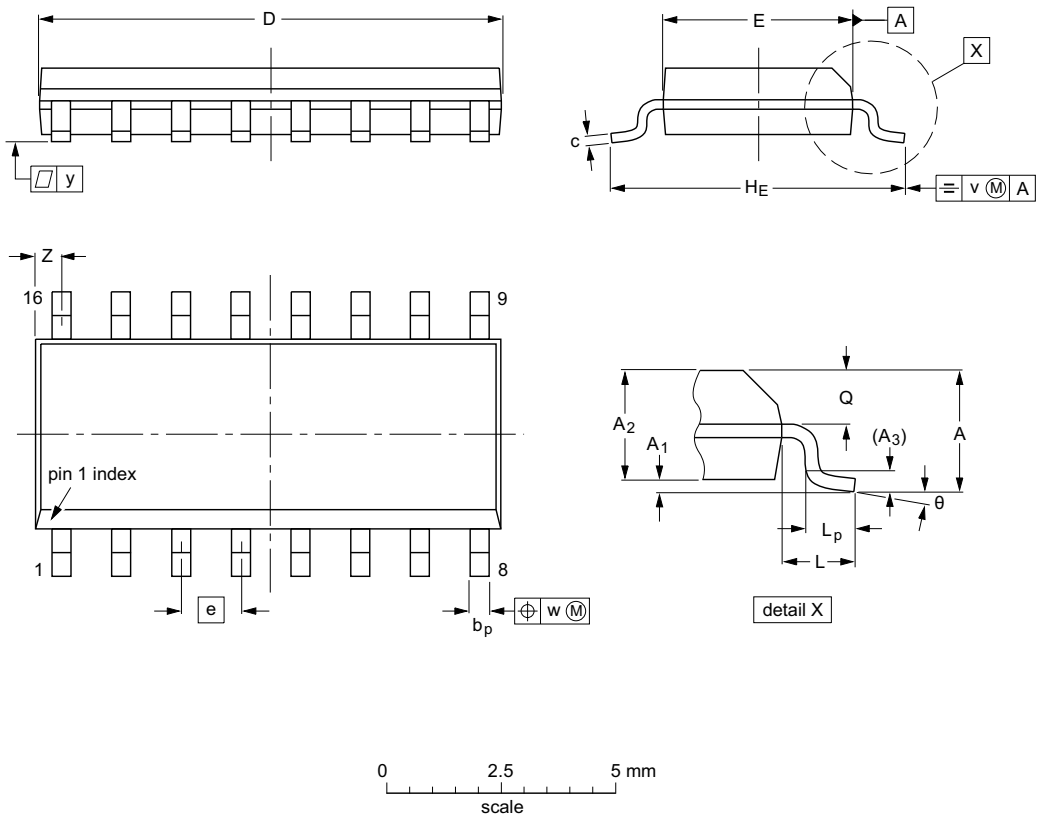

DIMENSIONS (inch dimensions are derived from the original mm dimensions)

UNIT	A max.	A_1	A_2	A_3	b_p	c	D(1)	E(1)	e	H_E	L	L_p	Q	v	w	y	Z(1)	θ
mm	1.75	0.25 0.10	1.45 1.25	0.25	0.49 0.36	0.25 0.19	10.0 9.8	4.0 3.8	1.27	6.2 5.8	1.05	1.0 0.4	0.7 0.6	0.25	0.25	0.1	0.7 0.3	8° 0°
inches	0.069	0.010 0.004	0.057 0.049	0.01	0.019 0.014	0.0100 0.0075	0.39 0.38	0.16 0.15	0.05	0.244 0.228	0.041	0.039 0.016	0.028 0.020	0.01	0.01	0.004	0.028 0.012	

Note

1. Plastic or metal protrusions of 0.15 mm (0.006 inch) maximum per side are not included.

OUTLINE VERSION	REFERENCES				EUROPEAN PROJECTION	ISSUE DATE
	IEC	JEDEC	JEITA			
SOT109-1	076E07	MS-012				~~99-12-27~~ 03-02-19

Fig 15. Package outline SOT109-1 (SO16)

All information provided in this document is subject to legal disclaimers.

© Nexperia B.V. 2017. All rights reserved

SSOP16: plastic shrink small outline package; 16 leads; body width 5.3 mm **SOT338-1**

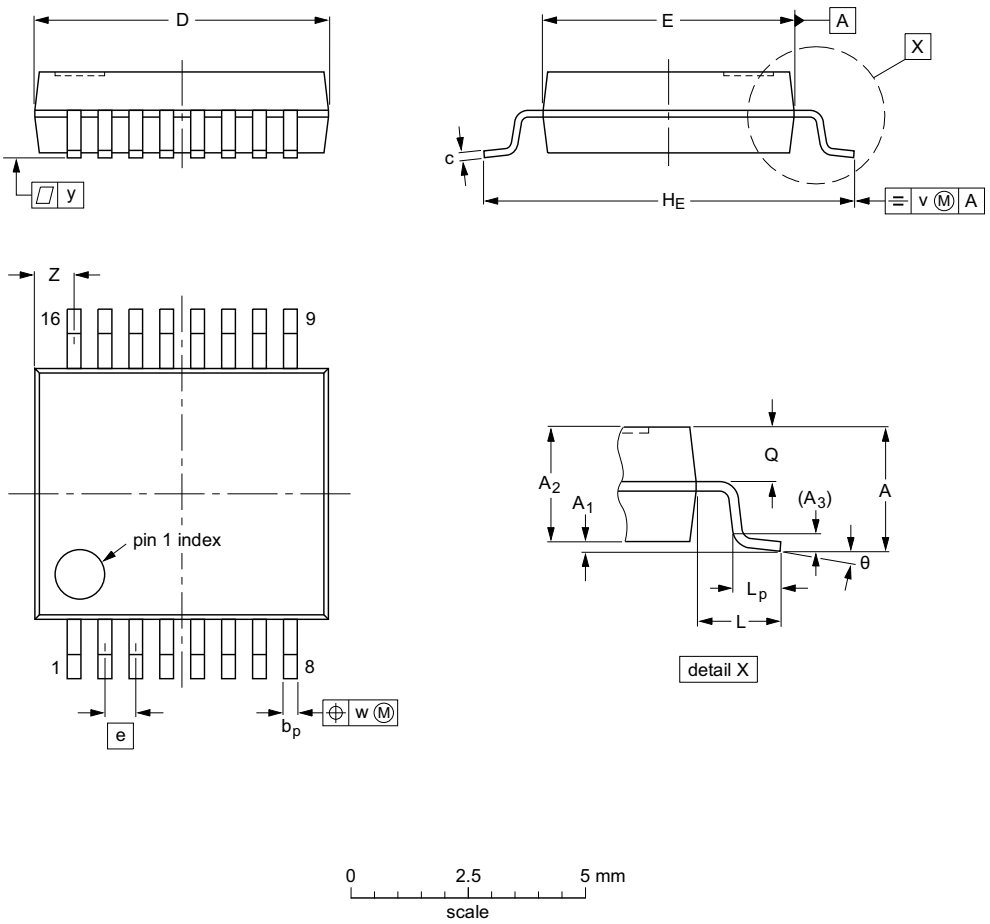

DIMENSIONS (mm are the original dimensions)

UNIT	A max.	A_1	A_2	A_3	b_p	c	D (1)	E (1)	e	H_E	L	L_p	Q	v	w	y	Z (1)	θ
mm	2	0.21 0.05	1.80 1.65	0.25	0.38 0.25	0.20 0.09	6.4 6.0	5.4 5.2	0.65	7.9 7.6	1.25	1.03 0.63	0.9 0.7	0.2	0.13	0.1	1.00 0.55	8° 0°

Note

1. Plastic or metal protrusions of 0.25 mm maximum per side are not included.

OUTLINE VERSION	REFERENCES				EUROPEAN PROJECTION	ISSUE DATE
	IEC	JEDEC	JEITA			
SOT338-1		MO-150				~~99-12-27~~ 03-02-19

Fig 16. Package outline SOT338-1 (SSOP16)

All information provided in this document is subject to legal disclaimers.

© Nexperia B.V. 2017. All rights reserved

TSSOP16: plastic thin shrink small outline package; 16 leads; body width 4.4 mm **SOT403-1**

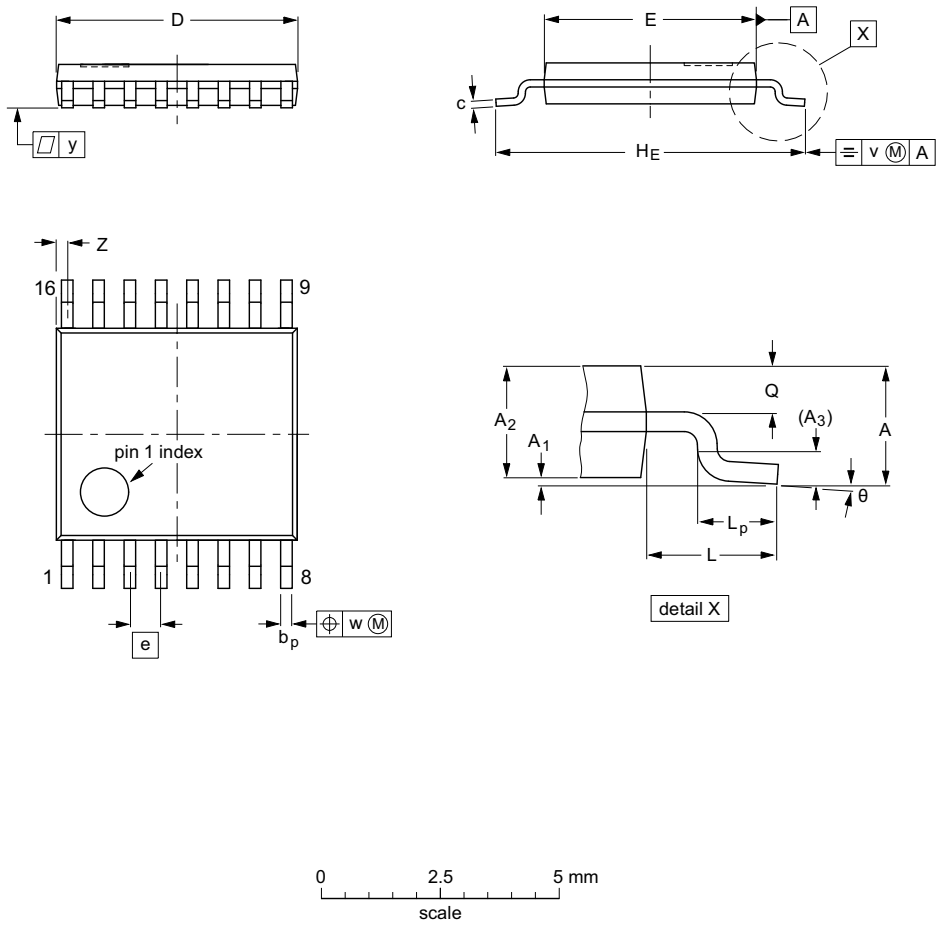

DIMENSIONS (mm are the original dimensions)

UNIT	A max.	A_1	A_2	A_3	b_p	c	D (1)	E (2)	e	H_E	L	L_p	Q	v	w	y	Z (1)	θ
mm	1.1	0.15 0.05	0.95 0.80	0.25	0.30 0.19	0.2 0.1	5.1 4.9	4.5 4.3	0.65	6.6 6.2	1	0.75 0.50	0.4 0.3	0.2	0.13	0.1	0.40 0.06	8° 0°

Notes

1. Plastic or metal protrusions of 0.15 mm maximum per side are not included.
2. Plastic interlead protrusions of 0.25 mm maximum per side are not included.

OUTLINE VERSION	REFERENCES				EUROPEAN PROJECTION	ISSUE DATE
	IEC	JEDEC	JEITA			
SOT403-1		MO-153				~~99-12-27~~ 03-02-18

Fig 17. Package outline SOT403-1 (TSSOP16)

All information provided in this document is subject to legal disclaimers.

© Nexperia B.V. 2017. All rights reserved

DHVQFN16: plastic dual in-line compatible thermal enhanced very thin quad flat package; no leads; 16 terminals; body 2.5 x 3.5 x 0.85 mm **SOT763-1**

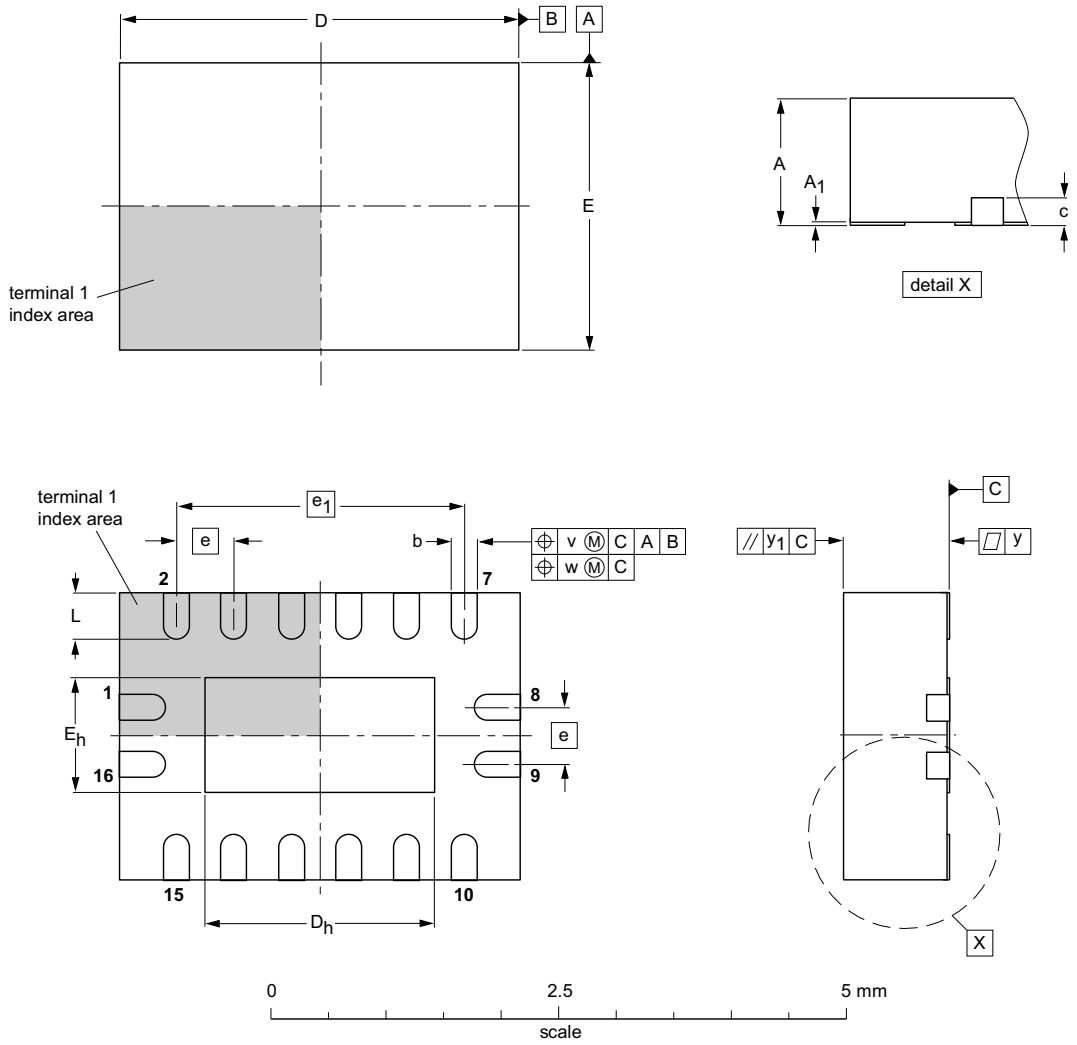

DIMENSIONS (mm are the original dimensions)

UNIT	A(1) max.	A_1	b	c	D(1)	D_h	E(1)	E_h	e	e_1	L	v	w	y	y_1
mm	1	0.05 0.00	0.30 0.18	0.2	3.6 3.4	2.15 1.85	2.6 2.4	1.15 0.85	0.5	2.5	0.5 0.3	0.1	0.05	0.05	0.1

Note

1. Plastic or metal protrusions of 0.075 mm maximum per side are not included.

OUTLINE VERSION	REFERENCES				EUROPEAN PROJECTION	ISSUE DATE
	IEC	JEDEC	JEITA			
SOT763-1	- - -	MO-241	- - -			~~02-10-17~~ 03-01-27

Fig 18. Package outline SOT763-1 (DHVQFN16)

All information provided in this document is subject to legal disclaimers.

© Nexperia B.V. 2017. All rights reserved

14. Abbreviations

Table 10. Abbreviations

Acronym	Description
CMOS	Complementary Metal Oxide Semiconductor
DUT	Device Under Test

15. Revision history

Table 11. Revision history

Document ID	Release date	Data sheet status	Change notice	Supersedes
74LV123 v.8	20160304	Product data sheet	-	74LV123 v.7
Modifications:	• Type numbers 74LV123N (SOT38-4) removed.			
74LV123 v.7	20111212	Product data sheet	-	74LV123 v.6
Modifications:	• Legal pages updated.			
74LV123 v.6	20110826	Product data sheet	-	74LV123 v.5
74LV123 v.5	20071108	Product data sheet	-	74LV123 v.4
74LV123 v.4	20070919	Product specification	-	74LV123 v.3
74LV123 v.3	20030313	Product specification	-	74LV123 v.2
74LV123 v.2	19980420	Product specification	-	74LV123 v.1
74LV123 v.1	19970204	Product specification	-	-

All information provided in this document is subject to legal disclaimers.

© Nexperia B.V. 2017. All rights reserved

16. Legal information

16.1 Data sheet status

Document status[1][2]	Product status[3]	Definition
Objective [short] data sheet	Development	This document contains data from the objective specification for product development.
Preliminary [short] data sheet	Qualification	This document contains data from the preliminary specification.
Product [short] data sheet	Production	This document contains the product specification.

[1] Please consult the most recently issued document before initiating or completing a design.

[2] The term 'short data sheet' is explained in section "Definitions".

[3] The product status of device(s) described in this document may have changed since this document was published and may differ in case of multiple devices. The latest product status information is available on the Internet at URL http://www.nexperia.com.

16.2 Definitions

Draft — The document is a draft version only. The content is still under internal review and subject to formal approval, which may result in modifications or additions. Nexperia does not give any representations or warranties as to the accuracy or completeness of information included herein and shall have no liability for the consequences of use of such information.

Short data sheet — A short data sheet is an extract from a full data sheet with the same product type number(s) and title. A short data sheet is intended for quick reference only and should not be relied upon to contain detailed and full information. For detailed and full information see the relevant full data sheet, which is available on request via the local Nexperia sales office. In case of any inconsistency or conflict with the short data sheet, the full data sheet shall prevail.

Product specification — The information and data provided in a Product data sheet shall define the specification of the product as agreed between Nexperia and its customer, unless Nexperia and customer have explicitly agreed otherwise in writing. In no event however, shall an agreement be valid in which the Nexperia product is deemed to offer functions and qualities beyond those described in the Product data sheet.

16.3 Disclaimers

Limited warranty and liability — Information in this document is believed to be accurate and reliable. However, Nexperia does not give any representations or warranties, expressed or implied, as to the accuracy or completeness of such information and shall have no liability for the consequences of use of such information. Nexperia takes no responsibility for the content in this document if provided by an information source outside of Nexperia.

In no event shall Nexperia be liable for any indirect, incidental, punitive, special or consequential damages (including - without limitation - lost profits, lost savings, business interruption, costs related to the removal or replacement of any products or rework charges) whether or not such damages are based on tort (including negligence), warranty, breach of contract or any other legal theory.

Notwithstanding any damages that customer might incur for any reason whatsoever, Nexperia's aggregate and cumulative liability towards customer for the products described herein shall be limited in accordance with the *Terms and conditions of commercial sale* of Nexperia.

Right to make changes — Nexperia reserves the right to make changes to information published in this document, including without limitation specifications and product descriptions, at any time and without notice. This document supersedes and replaces all information supplied prior to the publication hereof.

Suitability for use — Nexperia products are not designed, authorized or warranted to be suitable for use in life support, life-critical or safety-critical systems or equipment, nor in applications where failure or malfunction of a Nexperia product can reasonably be expected to result in personal injury, death or severe property or environmental damage. Nexperia and its suppliers accept no liability for inclusion and/or use of Nexperia products in such equipment or applications and therefore such inclusion and/or use is at the customer's own risk.

Applications — Applications that are described herein for any of these products are for illustrative purposes only. Nexperia makes no representation or warranty that such applications will be suitable for the specified use without further testing or modification.

Customers are responsible for the design and operation of their applications and products using Nexperia products, and Nexperia accepts no liability for any assistance with applications or customer product design. It is customer's sole responsibility to determine whether the Nexperia product is suitable and fit for the customer's applications and products planned, as well as for the planned application and use of customer's third party customer(s). Customers should provide appropriate design and operating safeguards to minimize the risks associated with their applications and products.

Nexperia does not accept any liability related to any default, damage, costs or problem which is based on any weakness or default in the customer's applications or products, or the application or use by customer's third party customer(s). Customer is responsible for doing all necessary testing for the customer's applications and products using Nexperia products in order to avoid a default of the applications and the products or of the application or use by customer's third party customer(s). Nexperia does not accept any liability in this respect.

Limiting values — Stress above one or more limiting values (as defined in the Absolute Maximum Ratings System of IEC 60134) will cause permanent damage to the device. Limiting values are stress ratings only and (proper) operation of the device at these or any other conditions above those given in the Recommended operating conditions section (if present) or the Characteristics sections of this document is not warranted. Constant or repeated exposure to limiting values will permanently and irreversibly affect the quality and reliability of the device.

Terms and conditions of commercial sale — Nexperia products are sold subject to the general terms and conditions of commercial sale, as published at http://www.nexperia.com/profile/terms, unless otherwise agreed in a valid written individual agreement. In case an individual agreement is concluded only the terms and conditions of the respective agreement shall apply. Nexperia hereby expressly objects to applying the customer's general terms and conditions with regard to the purchase of Nexperia products by customer.

No offer to sell or license — Nothing in this document may be interpreted or construed as an offer to sell products that is open for acceptance or the grant, conveyance or implication of any license under any copyrights, patents or other industrial or intellectual property rights.

All information provided in this document is subject to legal disclaimers.

© Nexperia B.V. 2017. All rights reserved

Export control — This document as well as the item(s) described herein may be subject to export control regulations. Export might require a prior authorization from competent authorities.

Non-automotive qualified products — Unless this data sheet expressly states that this specific Nexperia product is automotive qualified, the product is not suitable for automotive use. It is neither qualified nor tested in accordance with automotive testing or application requirements. Nexperia accepts no liability for inclusion and/or use of non-automotive qualified products in automotive equipment or applications.

In the event that customer uses the product for design-in and use in automotive applications to automotive specifications and standards, customer (a) shall use the product without Nexperia's warranty of the product for such automotive applications, use and specifications, and (b) whenever customer uses the product for automotive applications beyond Nexperia's specifications such use shall be solely at customer's own risk, and (c) customer fully indemnifies Nexperia for any liability, damages or failed product claims resulting from customer design and use of the product for automotive applications beyond Nexperia's standard warranty and Nexperia's product specifications.

Translations — A non-English (translated) version of a document is for reference only. The English version shall prevail in case of any discrepancy between the translated and English versions.

16.4 Trademarks

Notice: All referenced brands, product names, service names and trademarks are the property of their respective owners.

17. Contact information

For more information, please visit: **http://www.nexperia.com**

For sales office addresses, please send an email to: **salesaddresses@nexperia.com**

All information provided in this document is subject to legal disclaimers.

© Nexperia B.V. 2017. All rights reserved

18. Contents

1 General description 1
2 Features and benefits 1
3 Ordering information 2
4 Functional diagram 2
5 Pinning information 5
5.1 Pinning 5
5.2 Pin description 5
6 Functional description 6
7 Limiting values 7
8 Recommended operating conditions 7
9 Static characteristics 8
10 Dynamic characteristics 10
11 Waveforms 12
12 Application information 13
12.1 Timing components 13
12.1.1 Basic timing 13
12.1.2 Retrigger timing 14
12.1.3 Reset timing 15
12.2 Power considerations 15
12.2.1 Power-up 15
12.2.2 Power-down 15
13 Package outline 16
14 Abbreviations 20
15 Revision history 20
16 Legal information 21
16.1 Data sheet status 21
16.2 Definitions 21
16.3 Disclaimers 21
16.4 Trademarks 22
17 Contact information 22
18 Contents 23

© Nexperia B.V. 2017. All rights reserved

For more information, please visit: http://www.nexperia.com
For sales office addresses, please send an email to: salesaddresses@nexperia.com
Date of release: 04 March 2016

Мы молодая и активно развивающаяся компания в области поставок электронных компонентов. Мы поставляем электронные компоненты отечественного и импортного производства напрямую от производителей и с крупнейших складов мира.

Благодаря сотрудничеству с мировыми поставщиками мы осуществляем комплексные и плановые поставки широчайшего спектра электронных компонентов.

Собственная эффективная логистика и склад в обеспечивает надежную поставку продукции в точно указанные сроки по всей России.

Мы осуществляем техническую поддержку нашим клиентам и предпродажную проверку качества продукции. На все поставляемые продукты мы предоставляем гарантию .

Осуществляем поставки продукции под контролем ВП МО РФ на предприятия военно-промышленного комплекса России , а также работаем в рамках 275 ФЗ с открытием отдельных счетов в уполномоченном банке. Система менеджмента качества компании соответствует требованиям ГОСТ ISO 9001.

Минимальные сроки поставки, гибкие цены, неограниченный ассортимент и индивидуальный подход к клиентам являются основой для выстраивания долгосрочного и эффективного сотрудничества с предприятиями радиоэлектронной промышленности, предприятиями ВПК и научно-исследовательскими институтами России.

С нами вы становитесь еще успешнее!

Наши контакты:

Телефон: +7 812 627 14 35

Электронная почта: sales@st-electron.ru

Адрес: 198099, Санкт-Петербург, Промышленная ул, дом № 19, литера Н, помещение 100-Н Офис 331