molex
one company › a world of innovation

This document was generated on 05/14/2010

PLEASE CHECK WWW.MOLEX.COM FOR LATEST PART INFORMATION

Part Number: 0739433200

Status: Active

Overview: hdm

Description: 2.00mm (.079") Pitch HDM® Board-to-Board Backplane Header, Vertical, Solder Tail, Closed End, 144 Circuits

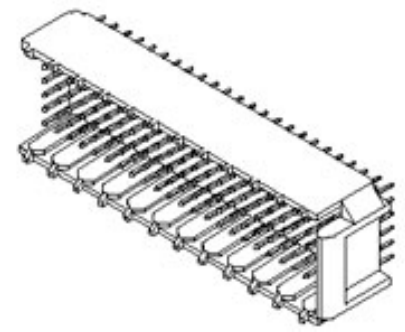

Series

image - Reference only

Documents:

3D Model
Drawing (PDF)
RoHS Certificate of Compliance (PDF)

Agency Certification

CSA	LR19980
UL	E29179

General

Product Family	Backplane Connectors
Series	73943
Application	Backplane
Comments	Solder Tail
Component Type	PCB Header
Overview	hdm
Product Name	HDM®
Style	N/A

Physical

Circuits (Loaded)	144
Circuits (maximum)	144
Color - Resin	Black, Natural
Durability (mating cycles max)	250
First Mate / Last Break	No
Flammability	94V-0
Guide to Mating Part	No
Keying to Mating Part	None
Material - Metal	Phosphor Bronze
Material - Plating Mating	Gold
Material - Plating Termination	Tin
Material - Resin	High Temperature Thermoplastic
Number of Columns	24
Number of Pairs	Open Pin Field
Number of Rows	6
Orientation	Vertical
PC Tail Length (in)	0.098 In
PC Tail Length (mm)	2.50 mm
PCB Retention	None
PCB Thickness Recommended (in)	0.098 In
PCB Thickness Recommended (mm)	2.50 mm
Packaging Type	Tube
Pitch - Mating Interface (in)	0.079 In
Pitch - Mating Interface (mm)	2.00 mm
Plating min: Mating (µin)	30
Plating min: Mating (µm)	0.75
Plating min: Termination (µin)	100
Plating min: Termination (µm)	2.5
Stackable	Yes
Surface Mount Compatible (SMC)	Yes
Temperature Range - Operating	-55°C to +105°C

EU RoHS
ELV and RoHS Compliant
REACH SVHC
Contains SVHC: No
Halogen-Free Status
Not Reviewed

China RoHS

Need more information on product environmental compliance?

Email productcompliance@molex.com
For a multiple part number RoHS Certificate of Compliance, click here

Please visit the Contact Us section for any non-product compliance questions.

Search Parts in this Series
73943Series

Mates With
73632 HDM PLUS® Board-to-Board Daughtercard Receptacle. 73780 HDM® Board-to-Board Daughtercard Receptacle

Application Tooling | **FAQ**

Tooling specifications and manuals are found by selecting the products below. Crimp Height Specifications are then contained in the Application Tooling Specification document.

Global

Description	Product #
HDM® Backplane Insertion Signal Contact Tool	0621001400
Extraction Tool	0621001000

Termination Interface: Style	Through Hole

Electrical

Current - Maximum per Contact	1A
Data Rate	1.0 Gbps
Voltage - Maximum	250V AC

Solder Process Data

Duration at Max. Process Temperature (seconds)	40
Lead-free Process Capability	SMC & Wave Capable (TH only)
Max. Cycles at Max. Process Temperature	3
Process Temperature max. C	260

Material Info

Reference - Drawing Numbers

Packaging Specification	PK-70873-0818
Sales Drawing	SD-73943-001

HDM and High Density Metric are trademarks of Amphenol Corporation

73943

NOTES:

1. MATERIALS: HOUSING--LIQUID CRYSTAL POLYMER (LCP), GLASS FILLED, UL94V-0, COLOR: BLACK, TERMINAL: PHOSPHOR BRONZE.
2. FINISH: 0.75 MICROMETERS MINIMUM SELECTIVE GOLD (Au) IN MATING AREA 2.50 MICROMETERS MINIMUM SELECTIVE TIN (Sn) IN TAIL AREA NICKEL (Ni) UNDERPLATE OVERALL.
3. THIS PART CONFORMS TO MOLEX PRODUCT SPECIFICATION PS-73670-9999.
4. FOR MIXED CONTACT MATING LENGTHS, CONSULT FACTORY FOR AVAILABILITY.
5. PACKAGE PER PK-70873-0818.
6. PARTS MARKED WITH PART NUMBER AND DATE CODE, ON EITHER SIDE, APPROXIMATELY WHERE SHOWN.

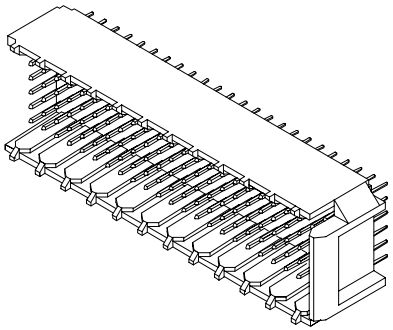

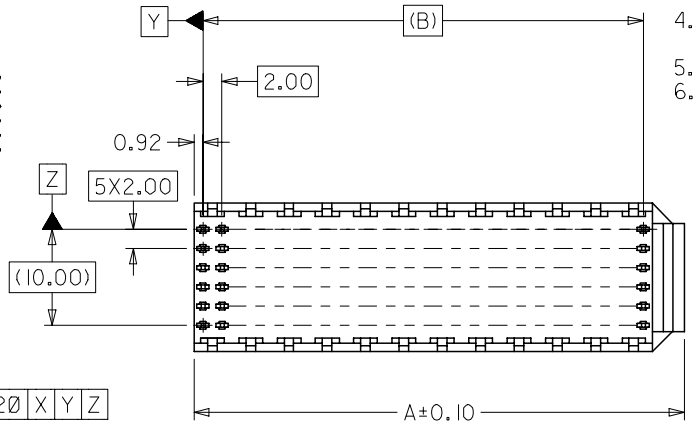

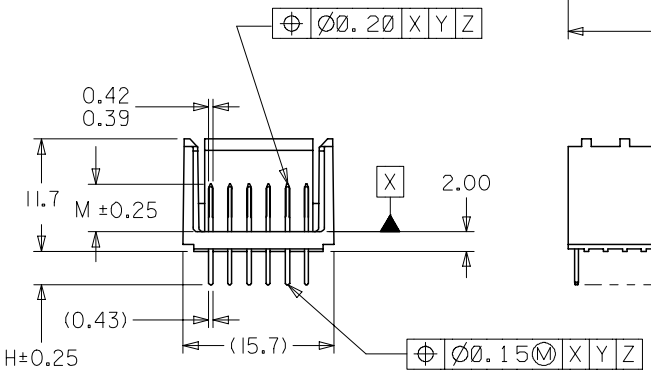

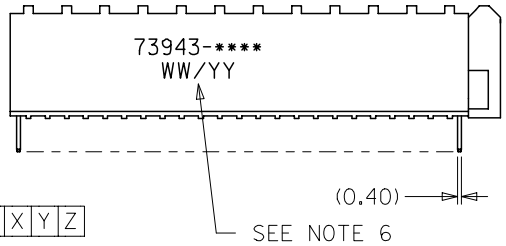

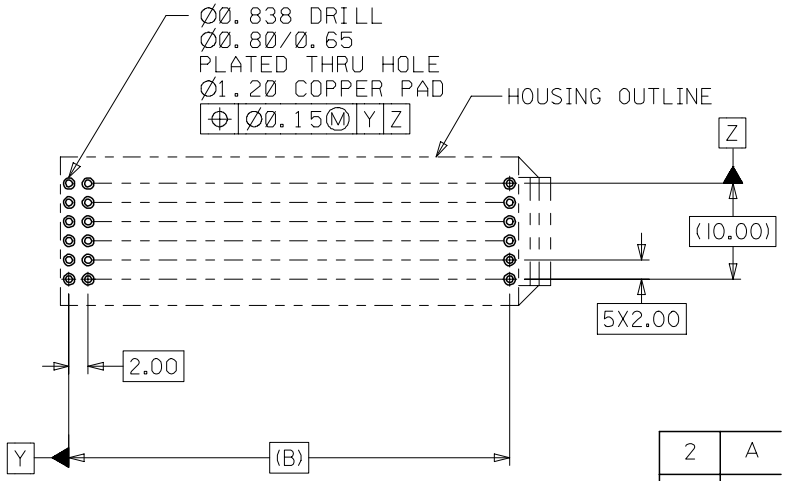

PCB LAYOUT: COMPONENT SIDE
RECOMMENDED PCB THICKNESS: 2.50 MIN

2	A
1	G
SHT	REV

MODIFY FINISH NOTE
EC NO: UCP2007-2259
DRWN:MSIBARRA 2007/03/13
CH'KD:BBARKER 2007/03/21
APPR:SMILLER 2007/03/22
DESCRIPTION
G
REV

QUALITY SYMBOLS
▼=0
▽=0

GENERAL TOLERANCES (UNLESS SPECIFIED)

	mm	INCH
4 PLACES	± ---	± ---
3 PLACES	± ---	± ---
2 PLACES	± 0.05	± ---
1 PLACE	± 0.10	± ---
ANGULAR ±1/2°		

DRAFT WHERE APPLICABLE MUST REMAIN WITHIN DIMENSIONS

DIMENSION STYLE: MM ONLY
SCALE: 2:1
DESIGN UNITS: METRIC
THIRD ANGLE PROJECTION

DRAWN BY: JBINGHAM DATE: 1998/01/13
CHECKED BY: SREED DATE: 1998/01/13
APPROVED BY: CBIXLER DATE: 1998/01/13

TITLE: SALES ASSY HDM BACKPLANE END WALL OPTION SOLDER TAIL VERSION

molex MOLEX INCORPORATED

MATERIAL NO.: SEE CHART
DOCUMENT NO.: SD-73943-001
SHEET NO.: 1 OF 2
SIZE: B

THIS DRAWING CONTAINS INFORMATION THAT IS PROPRIETARY TO MOLEX INCORPORATED AND SHOULD NOT BE USED WITHOUT WRITTEN PERMISSION

MATERIAL NUMBER ASSIGNMENT

73943-* * 0 0

NUMBER	CIRCUIT SIZE	DIM "A"	DIM "B"	DIM "H"
0	72	27.6	22.00	2.0
1	144	51.6	46.00	2.0
2	72	27.6	22.00	2.5
3	144	51.6	46.00	2.5
4	72	27.6	22.00	3.0
5	144	51.6	46.00	3.0
6	72	27.6	22.00	3.5
7	144	51.6	46.00	3.5

NUMBER	DIM "M"
0	5.0
1	5.5
2	6.0

SEE SHEET 1
EC NO. U81577
DRWN: BINGHAM 98/02/03
CH'K: REED 98/02/03
APPR: BIXLER 98/02/03
DESCRIPTION
REV A

QUALITY SYMBOLS
MAJOR =0
CRITICAL (C) =0

GENERAL TOLERANCES: (UNLESS SPECIFIED)

	mm	INCH
4 PLACES	±0.	±.
3 PLACES	±0.	±.
2 PLACES	±0.N/A	±.
1 PLACE	±0.NA/	±.
ANGULAR: ±		°

DRAFT WHERE APPLICABLE MUST REMAIN WITHIN DIMENSIONS

SCALE NO:NE
DESIGN UNITS ☒mm ☐INCH
THIRD ANGLE PROJECTION
DIMENSIONS: ☐ mm/INCH ☐ INCH/mm ☒ mm ONLY
SHT REV
REVISE ON CAD ONLY

DRAWN BY & DATE JBINGHAM 98/01/13
CHECKED BY & DATE SREED 98/01/13
APPROVED BY & DATE CBIXLER 98/01/13

TITLE: SALES ASS'Y, HDM BACKPLANE END WALL OPTION SOLDER TAIL VERSION

molex MOLEX INCORPORATED

CAD FILENAME S73943X2.DGN
MATERIAL NO. SEE CHART
DRAWING NO. SD-73943-001
SHEET NO. 2
SIZE B

THIS DRAWING CONTAINS INFORMATION THAT IS PROPRIETARY TO MOLEX INCORPORATED AND SHOULD NOT BE USED WITHOUT WRITTEN PERMISSION.

Мы молодая и активно развивающаяся компания в области поставок электронных компонентов. Мы поставляем электронные компоненты отечественного и импортного производства напрямую от производителей и с крупнейших складов мира.

Благодаря сотрудничеству с мировыми поставщиками мы осуществляем комплексные и плановые поставки широчайшего спектра электронных компонентов.

Собственная эффективная логистика и склад в обеспечивает надежную поставку продукции в точно указанные сроки по всей России.

Мы осуществляем техническую поддержку нашим клиентам и предпродажную проверку качества продукции. На все поставляемые продукты мы предоставляем гарантию .

Осуществляем поставки продукции под контролем ВП МО РФ на предприятия военно-промышленного комплекса России , а также работаем в рамках 275 ФЗ с открытием отдельных счетов в уполномоченном банке. Система менеджмента качества компании соответствует требованиям ГОСТ ISO 9001.

Минимальные сроки поставки, гибкие цены, неограниченный ассортимент и индивидуальный подход к клиентам являются основой для выстраивания долгосрочного и эффективного сотрудничества с предприятиями радиоэлектронной промышленности, предприятиями ВПК и научно-исследовательскими институтами России.

С нами вы становитесь еще успешнее!

Наши контакты:

Телефон: +7 812 627 14 35

Электронная почта: sales@st-electron.ru

Адрес: 198099, Санкт-Петербург, Промышленная ул, дом № 19, литера Н, помещение 100-Н Офис 331