DATA SHEET

SMV1247-SMV1255 Series: Hyperabrupt Junction Tuning Varactors

Applications

- Low tuning voltage VCOs
- High-volume commercial systems

Features

- High capacitance ratio: $C_{0.3V}/C_{4.7V}$ = 12 typical
- Packages rated MSL1, 260 °C per JEDEC J-STD-020

Skyworks Green™ products are compliant with all applicable legislation and are halogen-free. For additional information, refer to *Skyworks Definition of Green™*, document number SQ04–0074.

Description

The SMV1247-SMV1255 group of silicon hyperabrupt junction varactor diodes is designed for use in Voltage Controlled Oscillators (VCOs) with a low tuning voltage operation. This group of varactors is characterized for capacitance and resistance over temperature.

Table 1 describes the various packages and markings of the SMV1247 to SMV1255 varactors.

Table 1. Packaging and Marking

Single	Single	Single	Common Cathode	Single
SC-79 Green™	SOD-323 Green™	SOT-23	SOT-23	SOD-882 Green™
♦ **SMV1247-079LF** Marking: Cathode and AH				**SMV1247-040LF** Marking: H
SMV1248-079LF Marking: Cathode and CH				
				SMV1248-040LF Marking: 8
♦ **SMV1249-079LF** Marking: Cathode and EH	**SMV1249-011LF** Marking: EF			**SMV1249-040LF** Marking: K
SMV1251-079LF Marking: Cathode and FH	**SMV1251-011LF** Marking: EH			**SMV1251-040LF** Marking: EH1
				SMV1253-040LF Marking: 3
SMV1253-079LF Marking: Cathode and GH	**SMV1253-011LF** Marking: EJ		**SMV1253-004LF** Green™ Marking: EJ3	
				SMV1255-040LF Marking: 4
♦ **SMV1255-079LF** Marking: Cathode and HH	**SMV1255-011LF** Marking: EK	**SMV1255-001LF** Green™ Marking: EK1		
L_S = 0.7 nH	L_S = 1.5 nH	L_S = 1.5 nH	L_S = 1.5 nH	L_S = 0.45 nH

The Pb-free symbol or "LF" in the part number denotes a lead-free, RoHS-compliant package unless otherwise noted as Green™. Tin/lead (Sn/Pb) packaging is not recommended for new designs.

Electrical and Mechanical Specifications

The absolute maximum ratings of the SMV1247-SMV1255 group of varactors are provided in Table 2. Electrical specifications are provided in Table 3. Typical capacitance values are listed in Table 4. Typical performance characteristics of the SMV1247-SMV1255 varactors are illustrated in Figures 1 through 4.

The SPICE model for the SMV1247-SMV1255 varactors is shown in Figure 5, and the associated model parameters are provided in Table 5.

Package dimensions are shown in Figures 6 to 12 (even numbers), and tape and reel dimensions are provided in Figures 7 to 13 (odd numbers).

Package and Handling Information

Instructions on the shipping container label regarding exposure to moisture after the container seal is broken must be followed. Otherwise, problems related to moisture absorption may occur when the part is subjected to high temperature during solder assembly.

The SMV1247-SMV1255 group of varactors are rated to Moisture Sensitivity Level 1 (MSL1) at 260 °C. They can be used for lead or lead-free soldering. For additional information, refer to the Skyworks Application Note, *Solder Reflow Information*, document number 200164.

Care must be taken when attaching this product, whether it is done manually or in a production solder reflow environment. Production quantities of this product are shipped in a standard tape and reel format.

Table 2. SMV1247-SMV1255 Absolute Maximum Ratings[1]

Parameter	Symbol	Minimum	Maximum	Units
Reverse voltage	V_R		15	V
Forward current	I_F		20	mA
Power dissipation	P_{DIS}		250	mW
Operating temperature	T_{OP}	–55	+125	°C
Storage temperature	T_{STG}	–55	+150	°C
Electrostatic discharge:	ESD			
Charged Device Model (CDM), Class 4			1000	V
Human Body Model (HBM), Class 1A			250	V
Machine Model (MM), Class A			<50	V

[1] Exposure to maximum rating conditions for extended periods may reduce device reliability. There is no damage to device with only one parameter set at the limit and all other parameters set at or below their nominal value. Exceeding any of the limits listed here may result in permanent damage to the device.

ESD HANDLING: *Although this device is designed to be as robust as possible, electrostatic discharge (ESD) can damage this device. This device must be protected at all times from ESD when handling or transporting. Static charges may easily produce potentials of several kilovolts on the human body or equipment, which can discharge without detection. Industry-standard ESD handling precautions should be used at all times.*

Table 3. SMV1247-SMV1255 Electrical Specifications[1]
(T_{OP} = 25 °C, Unless Otherwise Noted)

Part Number	C_T @ 0.3 V (pF)		C_T @ 4.7 V (pF)		C_T @ 1 V (pF)	C_T @ 3 V (pF)	C_T @ 0.3 V / C_T @ 4.7 V (Ratio)		C_T @ 1 V / C_T @ 3 V (Ratio)	R_S @ 3 V, 500 MHz (Ω)	Q @ 3 V, 50 MHz
	Min	Typ	Typ	Max	Typ	Typ	Min	Typ	Typ	Max	Typ
SMV1247	6.5	7	0.7	0.78	4.4	0.95	9.5	10.0	4.6	6.0	1500
SMV1248	15.0	17	1.5	1.70	12.3	2.60	10.8	12.0	4.7	3.3	700
SMV1249	28.0	31	2.6	2.80	18.2	3.40	11.0	12.1	5.3	2.2	600
SMV1251	38.0	42	3.4	3.80	28.1	5.80	11.0	12.2	4.8	1.6	400
SMV1253	48.0	53	4.3	4.80	37.0	7.80	11.0	12.3	4.7	1.4	350
SMV1255	58.0	64	5.2	5.80	43.3	8.50	11.0	12.3	5.1	1.3	350

[1] Performance is guaranteed only under the conditions listed in this table.
Reverse voltage V_R (I_R = 10 μA) = 15 V minimum
Reverse current I_R (V_R = 12 V) = 20 nA maximum

Table 4. Capacitance vs Reverse Voltage

V_R (V)	C_T (pF)					
	SMV1247	SMV1248	SMV1249	SMV1251	SMV1253	SMV1255
0	8.86	22.62	37.35	53.65	69.32	81.21
0.5	6.17	16.32	25.88	38.23	50.23	58.28
1.0	4.37	12.33	18.18	28.09	37.07	43.27
1.5	2.96	9.12	12.08	20.13	27.57	31.49
2.0	1.88	6.27	7.27	13.55	19.37	21.50
2.5	1.22	3.93	4.44	8.60	12.39	13.40
3.0	0.95	2.57	3.40	5.78	7.77	8.51
3.5	0.83	1.95	2.96	4.57	5.77	6.51
4.0	0.77	1.71	2.72	3.95	4.86	5.58
4.5	0.73	1.59	2.51	3.58	4.34	5.07
5.0	0.70	1.49	2.38	3.33	4.01	4.76
5.5	0.68	1.44	2.30	3.16	3.78	4.58
6.0	0.67	1.40	2.24	3.03	3.62	4.46
6.5	0.66	1.36	2.19	2.94	3.50	4.39
7.0	0.65	1.33	2.14	2.88	3.41	4.33
7.5	0.64	1.31	2.09	2.83	3.34	4.29
8.0	0.64	1.30	2.03	2.79	3.28	4.26

Typical Performance Characteristics

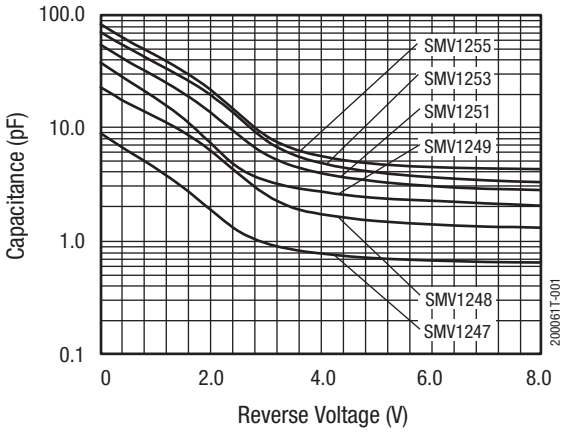

Figure 1. Capacitance vs Reverse Voltage

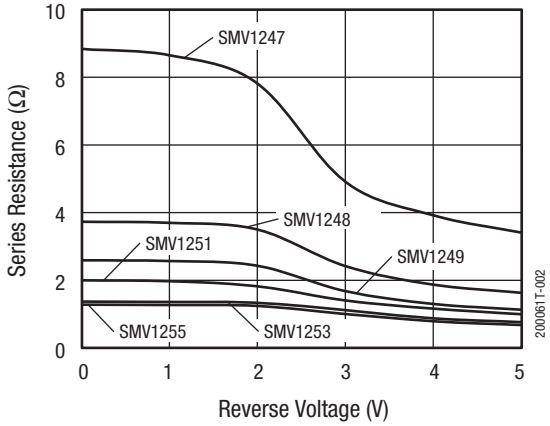

Figure 2. Series Resistance vs Reverse Voltage @ 500 MHz

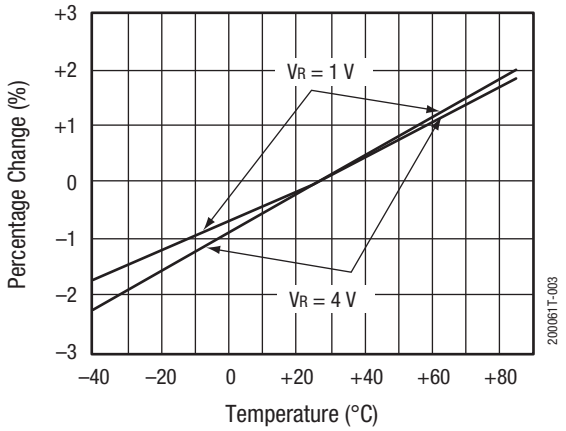

Figure 3. Relative Capacitance Change vs Temperature

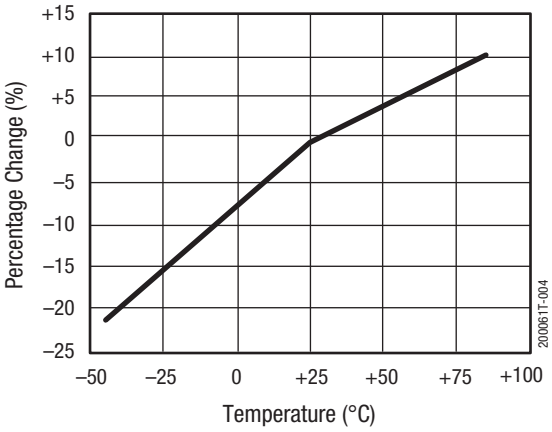

Figure 4. Relative Series Resistance Change vs Temperature @ 500 MHz

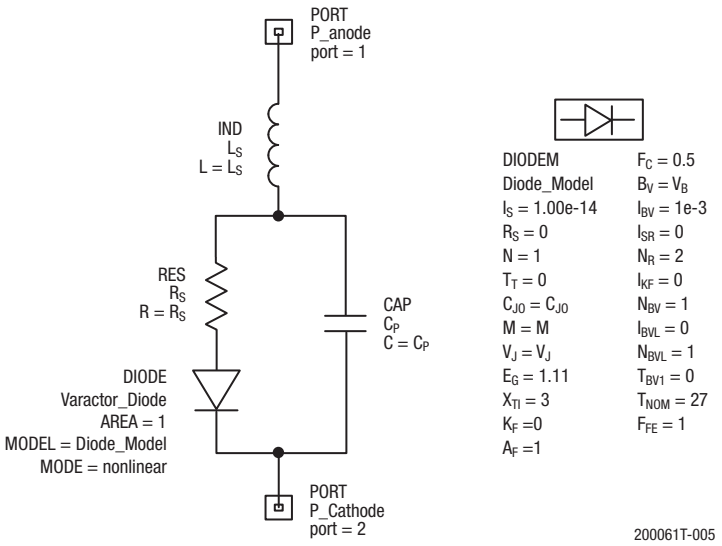

Figure 5. SPICE Model

Table 5. SPICE Model Parameters[1]

Part Number	C_{J0} (pF)	V_J (V)	M	C_P (pF)	R_S (Ω)
SMV1247	8.47	80	70	0.54	4.9
SMV1248	22.12	138	100	0.87	2.4
SMV1249	36.40	80	70	1.68	1.7
SMV1251	52.48	100	76	2.00	1.4
SMV1253	51.8	73.6	48.7	2.7	1.1
SMV1255	80.00	135	100	2.74	1.0

[1] Model was designed to fit measured data in the range of up to 4 V.
For package inductance (L_S), refer to Table 1.
For more details, refer to the Skyworks Application Note, *Varactor SPICE Model for Approved RF VCO Applications*, document number 200315.

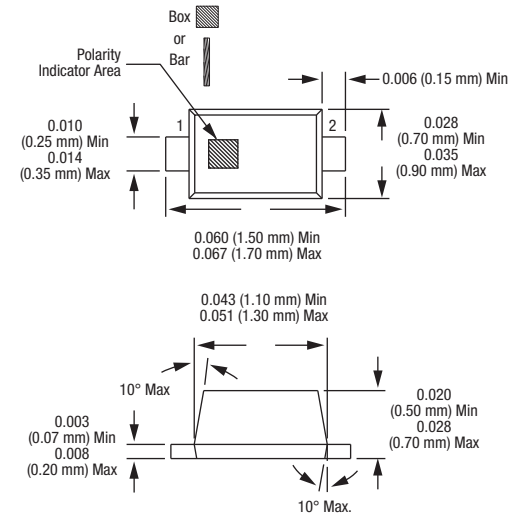

Dimensions are in inches (millimeters shown in parentheses)

200061T-006

Figure 6. SC-79 Package Dimensions

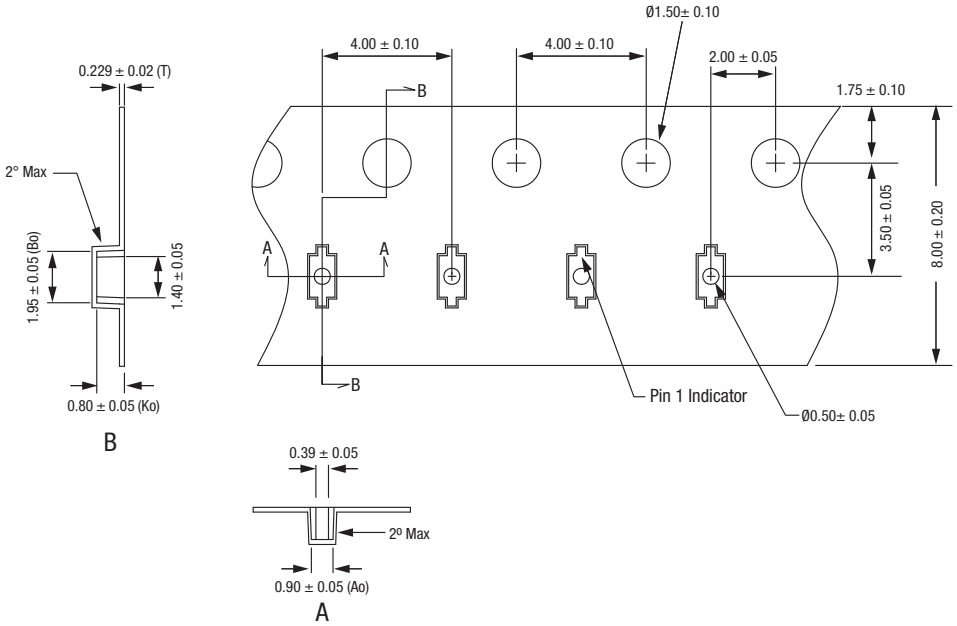

Notes:

1. *Carrier tape: black conductive polycarbonate or polystyrene.*
2. *Cover tape material: transparent conductive PSA.*
3. *Cover tape size: 5.4 mm width.*
4. *ESD-surface resistivity is ≤1 x 10^8 Ohms/square per EIA, JEDEC TNR Specification.*
5. *All measurements are in millimeters.*

200061T-007

Figure 7. SC-79 Tape and Reel Dimensions

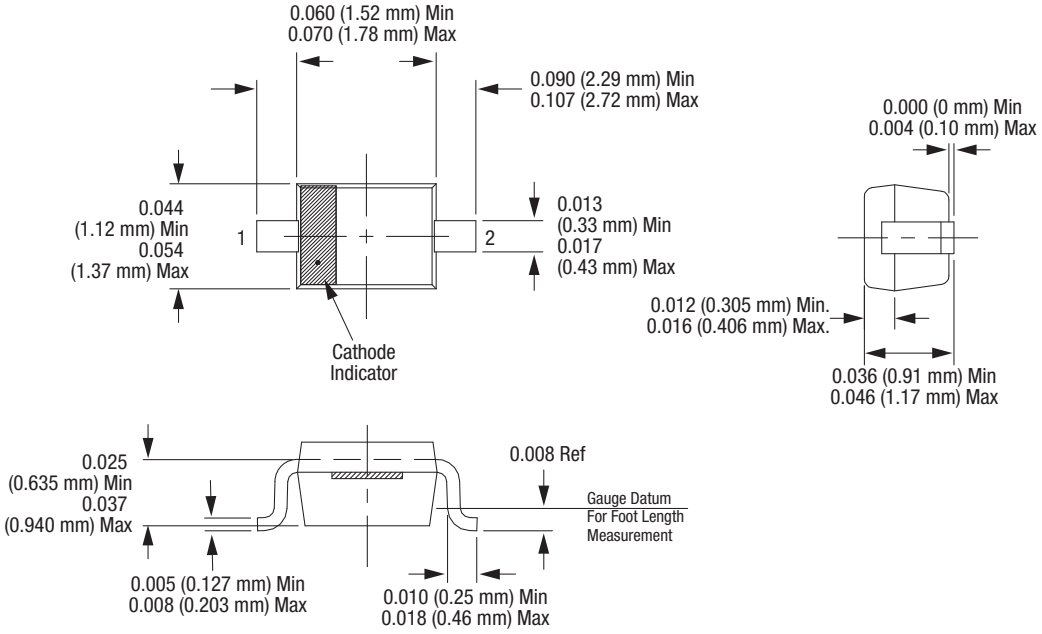

Dimensions are in inches (millimeters shown in parentheses)

200061T-008

Figure 8. SOD-323 Package Dimensions

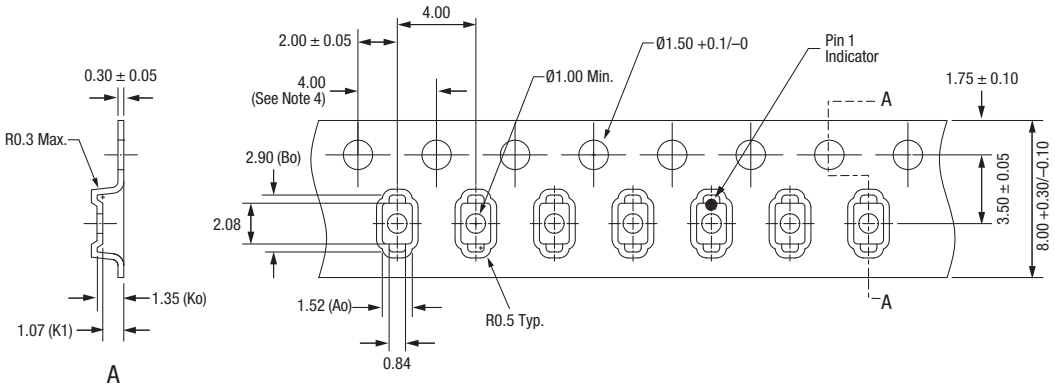

Notes:

1. *Carrier tape: black conductive polystyrene.*
2. *Cover tape: transparent conductive PSA.*
3. *Cover tape size: 5.4 mm width.*
4. *10 sprocket hole pitch cumulative tolerance: ±0.20 mm.*
5. *All measurements are in millimeters.*

200061T-009

Figure 9. SOD-323 Tape and Reel Dimensions

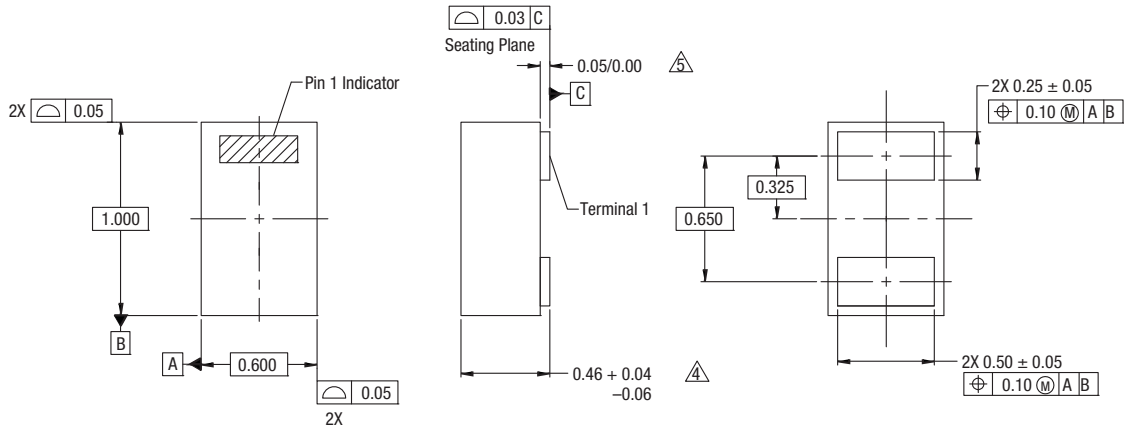

Notes:

1. *All measurements are in millimeters.*
2. *Dimensions and tolerances according to ASME Y14.5M-1994.*
3. *These packages are used principally for discrete devices.*
4. *This dimension includes stand-off height and package body thickness, but does not include attached features, e.g., external heatsink or chip capacitors. An integral heatslug is not considered an attached feature.*
5. *This dimension is primarily terminal plating, but does not include small metal protrusion.*

200061T-010

Figure 10. SOD-882 Package Dimensions

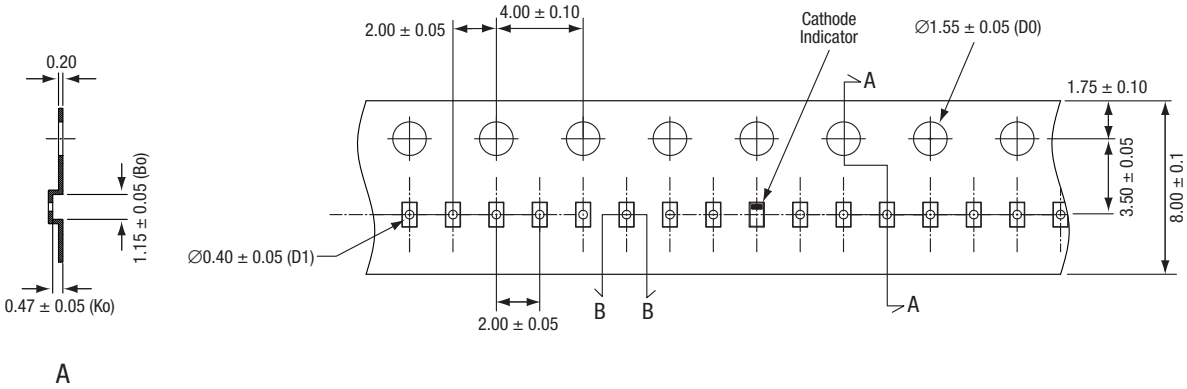

Notes:

1. *Carrier tape: black conductive polycarbonate.*
2. *Cover tape: transparent conductive material.*
3. *Cover tape size: 5.4 mm width.*
4. *ESD surface resistivity is ≥1 x 10^4 ~ ≤ 1 x 10^8 Ohms/square.*
5. *All dimensions are in millimeters.*

200061T-011

Figure 11. SOD-882 Tape and Reel Dimensions

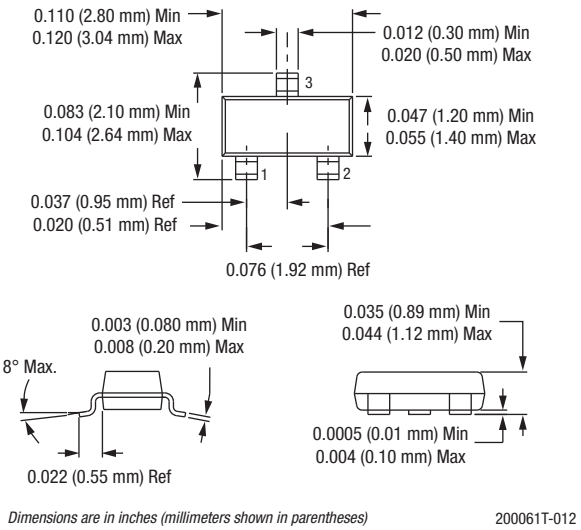

Figure 12. SOT-23 Package Dimensions

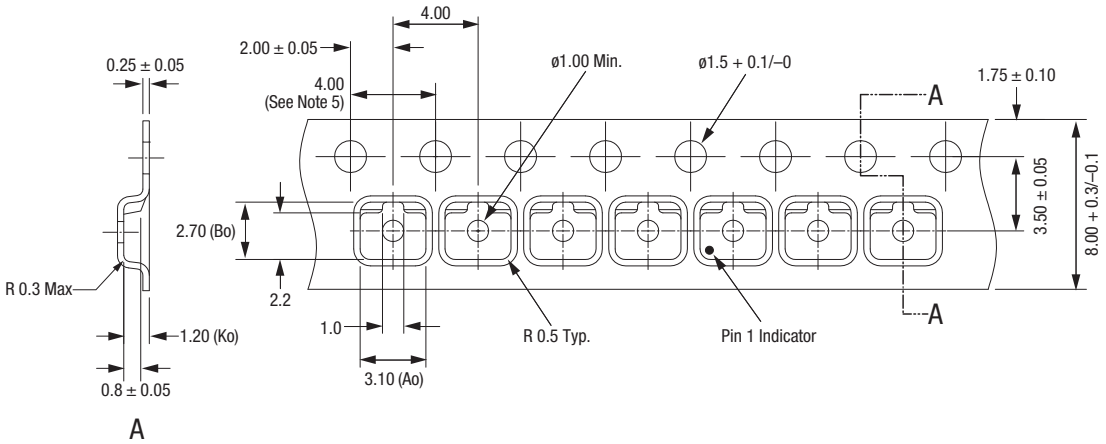

Notes:

1. *Carrier tape: black conductive polycarbonate.*
2. *Cover tape material: transparent conductive PSA.*
3. *Cover tape size: 5.40 mm width.*
4. *Tolerance ±0.10 mm.*
5. *10-sprocket hole pitch cumulative tolerance: ±0.2 mm.*
6. *All measurements are in millimeters.*
7. *Alternative carrier tape dimensions are:*
   Ao = 3.3
   Bo = 2.9
   Ko = 1.22

200061T-013

Figure 13. SOT-23 Tape and Reel Dimensions

Copyright © 2002-2007, 2009-2016 Skyworks Solutions, Inc. All Rights Reserved.

Information in this document is provided in connection with Skyworks Solutions, Inc. (“Skyworks”) products or services. These materials, including the information contained herein, are provided by Skyworks as a service to its customers and may be used for informational purposes only by the customer. Skyworks assumes no responsibility for errors or omissions in these materials or the information contained herein. Skyworks may change its documentation, products, services, specifications or product descriptions at any time, without notice. Skyworks makes no commitment to update the materials or information and shall have no responsibility whatsoever for conflicts, incompatibilities, or other difficulties arising from any future changes.

No license, whether express, implied, by estoppel or otherwise, is granted to any intellectual property rights by this document. Skyworks assumes no liability for any materials, products or information provided hereunder, including the sale, distribution, reproduction or use of Skyworks products, information or materials, except as may be provided in Skyworks Terms and Conditions of Sale.

THE MATERIALS, PRODUCTS AND INFORMATION ARE PROVIDED “AS IS” WITHOUT WARRANTY OF ANY KIND, WHETHER EXPRESS, IMPLIED, STATUTORY, OR OTHERWISE, INCLUDING FITNESS FOR A PARTICULAR PURPOSE OR USE, MERCHANTABILITY, PERFORMANCE, QUALITY OR NON-INFRINGEMENT OF ANY INTELLECTUAL PROPERTY RIGHT; ALL SUCH WARRANTIES ARE HEREBY EXPRESSLY DISCLAIMED. SKYWORKS DOES NOT WARRANT THE ACCURACY OR COMPLETENESS OF THE INFORMATION, TEXT, GRAPHICS OR OTHER ITEMS CONTAINED WITHIN THESE MATERIALS. SKYWORKS SHALL NOT BE LIABLE FOR ANY DAMAGES, INCLUDING BUT NOT LIMITED TO ANY SPECIAL, INDIRECT, INCIDENTAL, STATUTORY, OR CONSEQUENTIAL DAMAGES, INCLUDING WITHOUT LIMITATION, LOST REVENUES OR LOST PROFITS THAT MAY RESULT FROM THE USE OF THE MATERIALS OR INFORMATION, WHETHER OR NOT THE RECIPIENT OF MATERIALS HAS BEEN ADVISED OF THE POSSIBILITY OF SUCH DAMAGE.

Skyworks products are not intended for use in medical, lifesaving or life-sustaining applications, or other equipment in which the failure of the Skyworks products could lead to personal injury, death, physical or environmental damage. Skyworks customers using or selling Skyworks products for use in such applications do so at their own risk and agree to fully indemnify Skyworks for any damages resulting from such improper use or sale.

Customers are responsible for their products and applications using Skyworks products, which may deviate from published specifications as a result of design defects, errors, or operation of products outside of published parameters or design specifications. Customers should include design and operating safeguards to minimize these and other risks. Skyworks assumes no liability for applications assistance, customer product design, or damage to any equipment resulting from the use of Skyworks products outside of stated published specifications or parameters.

Skyworks and the Skyworks symbol are trademarks or registered trademarks of Skyworks Solutions, Inc., in the United States and other countries. Third-party brands and names are for identification purposes only, and are the property of their respective owners. Additional information, including relevant terms and conditions, posted at www.skyworksinc.com, are incorporated by reference.

Мы молодая и активно развивающаяся компания в области поставок электронных компонентов. Мы поставляем электронные компоненты отечественного и импортного производства напрямую от производителей и с крупнейших складов мира.

Благодаря сотрудничеству с мировыми поставщиками мы осуществляем комплексные и плановые поставки широчайшего спектра электронных компонентов.

Собственная эффективная логистика и склад в обеспечивает надежную поставку продукции в точно указанные сроки по всей России.

Мы осуществляем техническую поддержку нашим клиентам и предпродажную проверку качества продукции. На все поставляемые продукты мы предоставляем гарантию .

Осуществляем поставки продукции под контролем ВП МО РФ на предприятия военно-промышленного комплекса России , а также работаем в рамках 275 ФЗ с открытием отдельных счетов в уполномоченном банке. Система менеджмента качества компании соответствует требованиям ГОСТ ISO 9001.

Минимальные сроки поставки, гибкие цены, неограниченный ассортимент и индивидуальный подход к клиентам являются основой для выстраивания долгосрочного и эффективного сотрудничества с предприятиями радиоэлектронной промышленности, предприятиями ВПК и научно-исследовательскими институтами России.

С нами вы становитесь еще успешнее!

Наши контакты:

Телефон: +7 812 627 14 35

Электронная почта: sales@st-electron.ru

Адрес: 198099, Санкт-Петербург, Промышленная ул, дом № 19, литера Н, помещение 100-Н Офис 331