Kxxx0yU SIDAC Series

RoHS

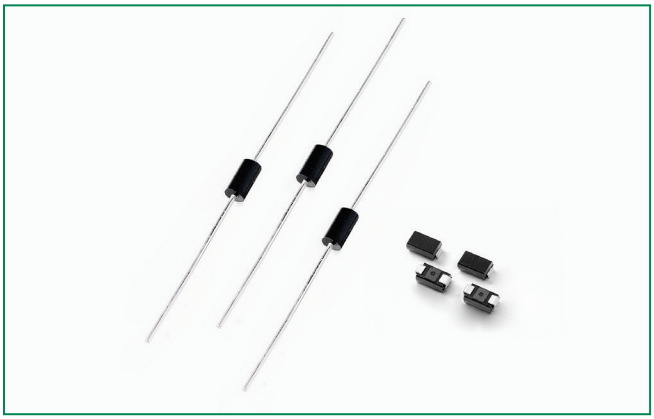

Schematic Symbol

Description

The SIDAC is a silicon unilateral voltage triggered switch. Upon application of a voltage exceeding the SIDAC breakover voltage point, the SIDAC switches on through a negative resistance region to a low on-state voltage. Conduction continues until the current is interrupted or drops below the minimum holding current of the device.

SIDACs feature glass-passivated junctions to ensure a rugged and dependable device capable of withstanding harsh environments.

Features

- Rectified AC/DC Circuit Oriented
- Triggering Voltage of 75V to 260V
- RoHS Compliant

Applications

Suitable for capacitor-discharge HV generator circuit

Electrical Specifications (T_J = 25°C, unless otherwise specified)

Symbol	Parameters	Test Conditions	min	max	Unit
V_{BO}	Breakover/Trigger Voltage	K0820yURP	75	90	V
		K0900yURP	79	97	
		K1050yURP	95	110	
		K1100yURP	104	118	
		K1200yURP	110	125	
		K1300yURP	120	138	
		K1400yURP	130	146	
		K1500yURP	142	157	
		K2000yURP	190	210	
		K2200yURP	210	230	
		K2300yURP	220	240	
		K2400yURP	230	250	
		K2500yURP	240	260	
V_{DRM}	Repetitive Peak Off-state Voltage	K0820yURP	70		V
		K0900yURP	70		
		K1050yURP	90		
		K1100yURP	90		
		K1200yURP	100		
		K1300yURP	110		
		K1400yURP	115		
		K1500yURP	120		
		K2000yURP	170		
		K2200yURP	190		
		K2300yURP	200		
		K2400yURP	210		
		K2500yURP	220		

©2015 Littelfuse, Inc
Specifications are subject to change without notice.

Revised: 08/11/15

Electrical Specifications (T_J = 25°C, unless otherwise specified)

Symbol	Parameters	Test Conditions			Min	Max	Unit
$I_{T(RMS)}$	On-state RMS Current	50/60Hz				1	A
I_{DRM}	Repetitive Peak Off-state Current	$V = V_{DRM}$ 50/60Hz Sine Wave				5	µA
V_{TM}	Peak On-state Voltage	I_T = 1A				1.2	V
I_H	Dynamic Holding Current	R_L = 100Ω 50/60Hz Sine Wave			10	80	mA
R_S	Switching Resistance, $R_S = \frac{(V_{BO} - V_S)}{(I_S - I_{BO})}$	50/60Hz Sine Wave			100		Ω
I_{BO}	Breakover Current	50/60Hz Sine Wave				10	µA
I_{TRM}	Peak Repetitive Pulse Current (refer to figure 4)	K0820yU~ K0900yU	T_P=10µs T_A=125C	60Hz		80	A
				5Hz		160	
		K1050yU~ K2000yU	T_P=10µs T_A=125C	60Hz		120	
				5Hz		280	
		K2200yU~ K2500yU	T_P=10µs T_A=135C	60Hz		120	
				5Hz		280	
I_{TSM}	Peak Non-repetitive Surge Current (refer to figure 5)	Single Cycle		60Hz		20	A
				50Hz		16.7	
di/dt	Critical Rate of Rise of On-state Current					150	A/µs
dv/dt	Critical Rate of Rise of Off-state Voltage				1500		V/µs
T_S	Storage Temperature Range				-40	150	°C
T_J	Junction Temperature Range	K0820yU~K2000yU			-40	125	°C
		K2200yU~K2500yU			-40	150	
$R_{\theta JL}$	Thermal Resistance, Junction to Lead	DO-214				30	°C/W
		DO-15				18	

Figure 1: V-I Characteristics

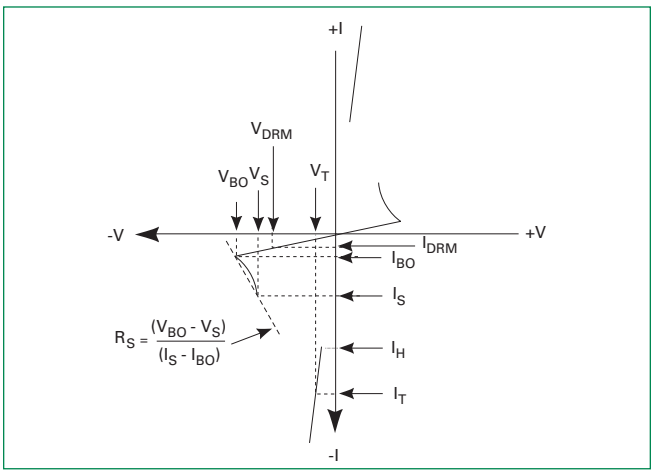

Figure 2: On-state Current vs. On-state Voltage (Typical)

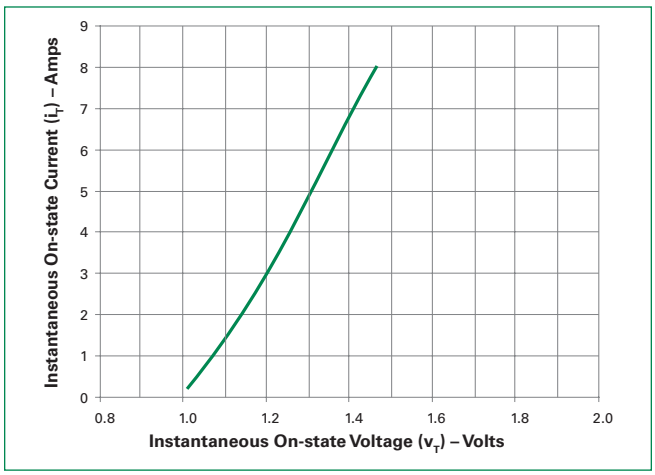

©2015 Littelfuse, Inc
Specifications are subject to change without notice.

Revised: 08/11/15

Figure 3: Power Dissipation vs. On-state Current (Typical)

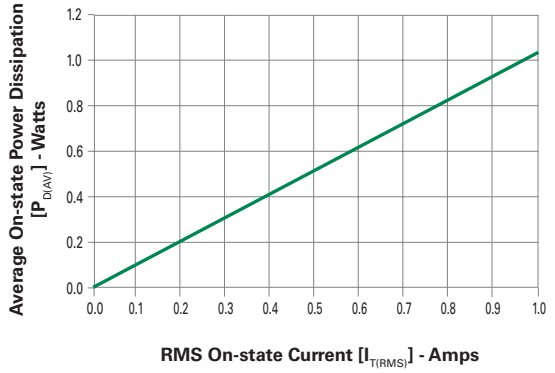

Figure 4: Peak Non-repetitive Surge Current (I_{TSM}) vs. Number of Cycles

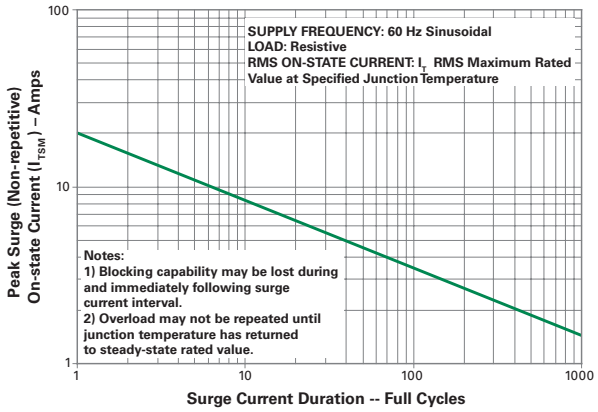

Figure 5: Repetitive Peak On-state Current(ITRM) vs. Pulse Width at Various Frequencies of K0820yU/K0900yU

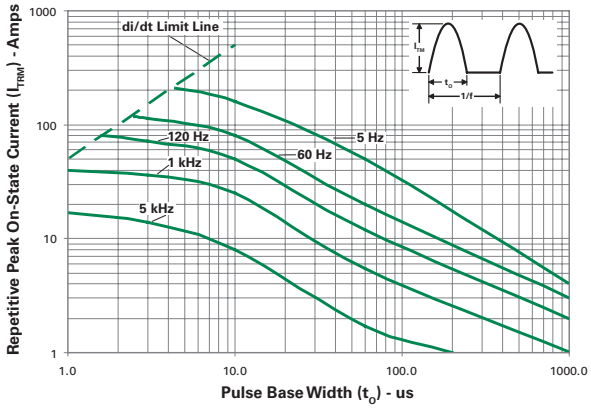

Figure 6: Repetitive Peak On-state Current (ITRM) vs. Pulse Width at Various Frequencies of K1050yU~K2500yU

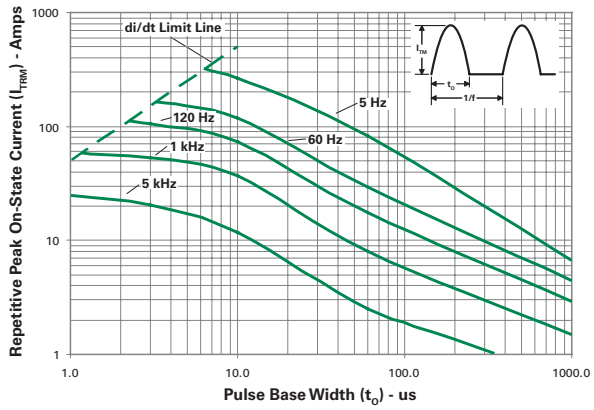

Figure 7: Normalized V_{BO} Change vs. Junction Temperature

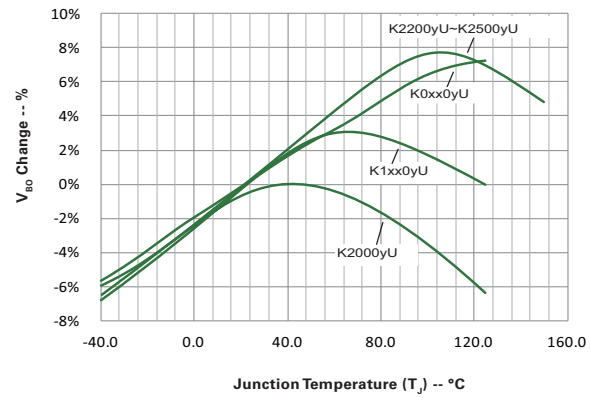

Figure 8: Normalized DC Holding Current vs. Junction Temperature

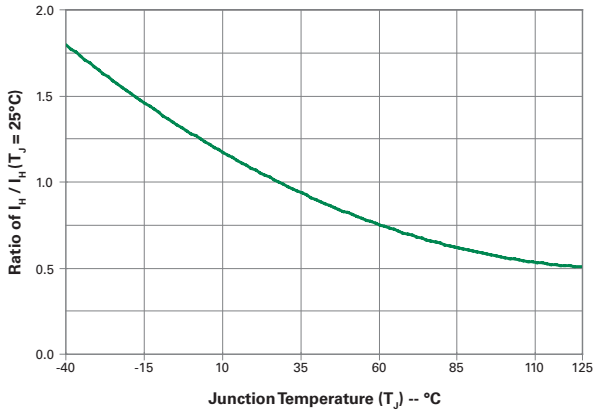

©2015 Littelfuse, Inc
Specifications are subject to change without notice.

Revised: 08/11/15

Figure 9: Maximum Allowable Case Temperature vs. RMS On-State Current

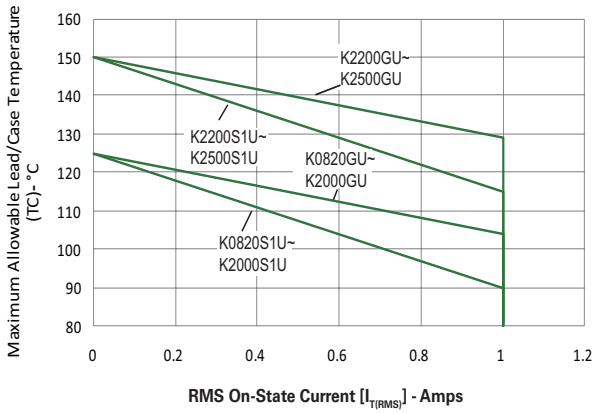

Figure 10: Maximum Allowable Ambient Temperature vs. RMS On-State Current

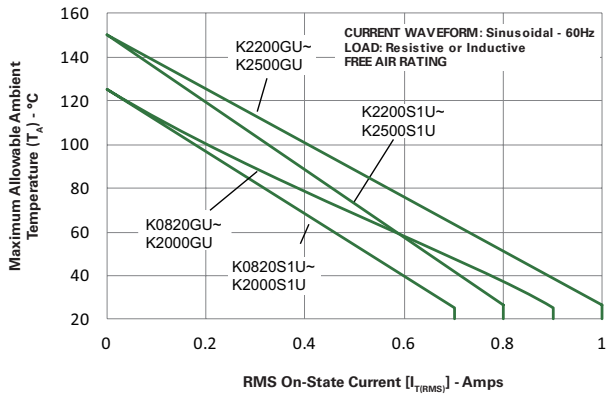

Figure 11: Normalized Repetitive Peak Breakover Current (I_{BO}) vs. Junction Temperature

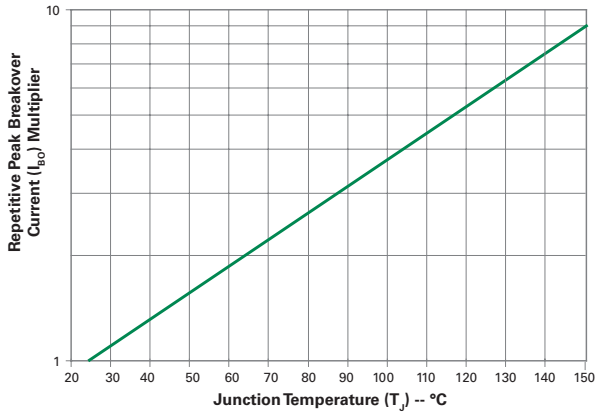

Figure 12: Dynamic Holding Current Test Circuit for SIDACs

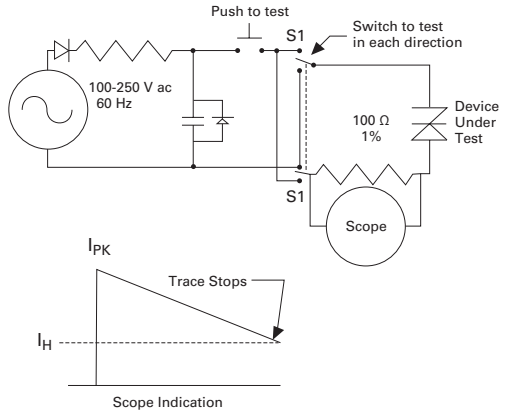

Figure 13: Basic SIDAC Circuit

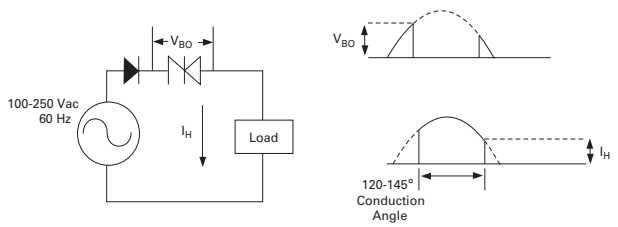

Figure 14: Relaxation Oscillator Using a SIDAC

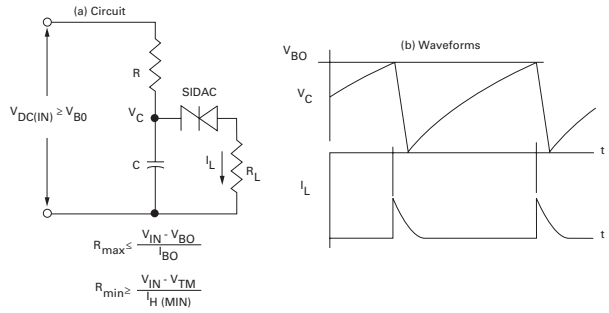

©2015 Littelfuse, Inc
Specifications are subject to change without notice.

Revised: 08/11/15

Figure 15: Low-voltage Input Circuit for Gas Ignition

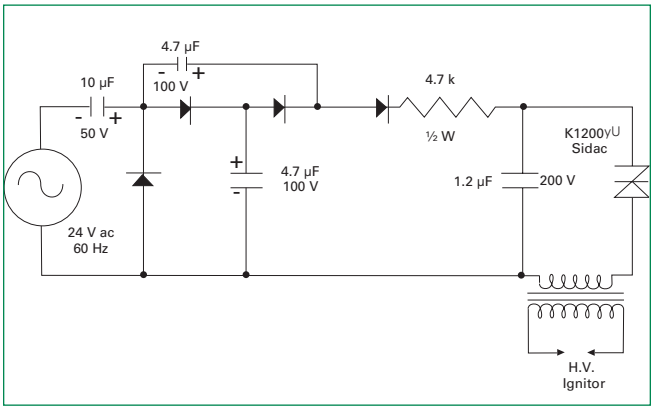

Figure 16: Comparison of SIDAC versus SCR for Gas Ignitor Circuit

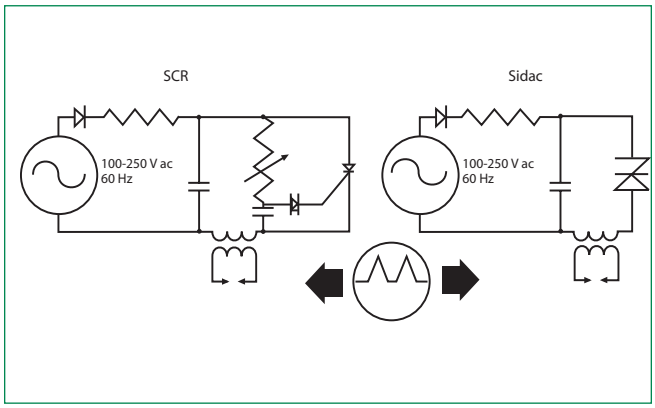

Figure 17: SIDAC Circuit for High-power Igniter

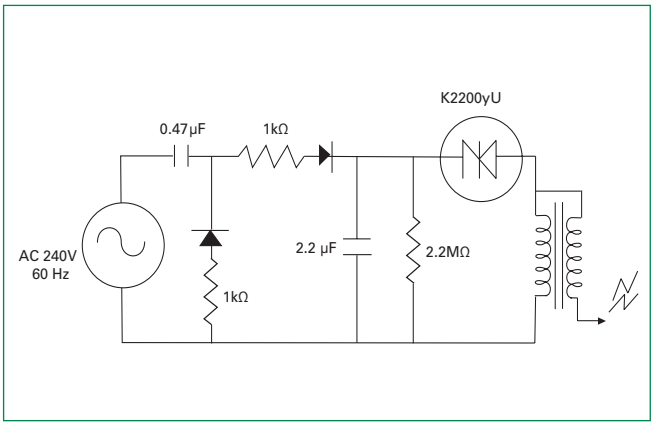

Figure 18: SIDAC Circuit for Gas Ignition

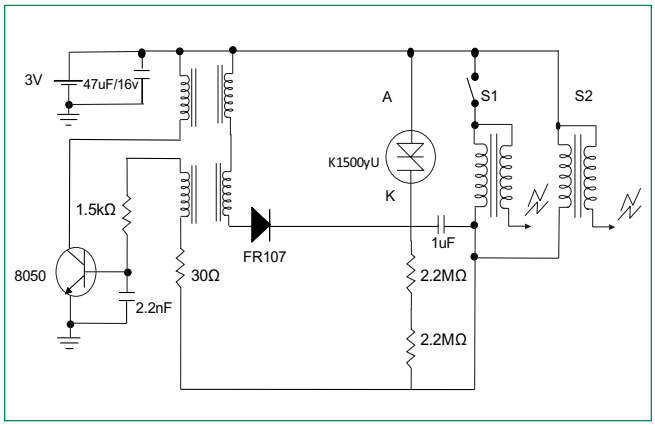

Soldering Parameters

Reflow Condition		Pb – Free assembly
Pre Heat	-Temperature Min ($T_{s(min)}$)	150°C
	-Temperature Max ($T_{s(max)}$)	200°C
	-Time (min to max) (t_s)	60 – 180 secs
Average ramp up rate (Liquidus Temp) (T_L) to peak		5°C/second max
$T_{S(max)}$ to T_L - Ramp-up Rate		5°C/second max
Reflow	-Temperature (T_L) (Liquidus)	217°C
	-Temperature (t_L)	60 – 150 seconds
Peak Temperature (T_P)		$260^{+0/-5}$ °C
Time within 5°C of actual peak Temperature (t_p)		20 – 40 seconds
Ramp-down Rate		5°C/second max
Time 25°C to peak Temperature (T_P)		8 minutes Max.
Do not exceed		280°C

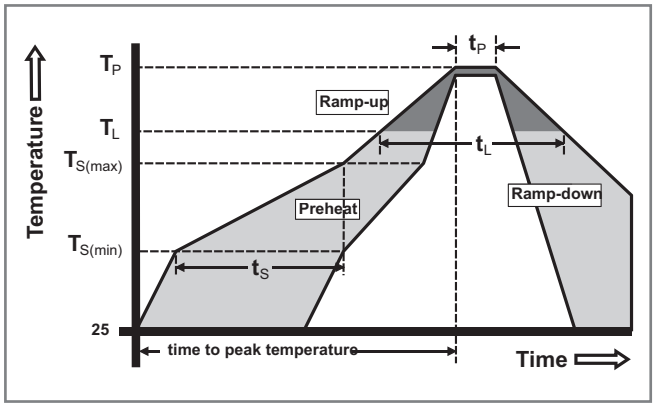

©2015 Littelfuse, Inc
Specifications are subject to change without notice.

Revised: 08/11/15

Physical Specifications

Terminal Finish	100% Matte Tin Plated
Body Material	UL recognized epoxy meeting flammability classification 94V-0
Lead Material	Copper Alloy

Design Considerations

Careful selection of the correct device for the application's operating parameters and environment will go a long way toward extending the operating life of the Thyristor. Overheating and surge currents are the main killers of SIDACs. Correct mounting, soldering, and forming of the leads also help protect against component damage.

Reliability/Environmental Tests

Test	Specifications and Conditions
High Temperature Voltage Blocking	MIL-STD-750: Method 1040, Condition A Rated V_{DRM} (Rectified VAC-peak), T_J, 504 hours
Temperature Cycling	MIL-STD-750: Method 1051 -40°C to 150°C, 15-minute dwell, 100 cycles
Biased Temperature & Humidity	EIA/JEDEC: JESD22-A101 80% min V_{BO} (V_{DC}), 85°C, 85%RH, 1008 hours
High Temp Storage	MIL-STD-750: Method 1031 150°C, 1008 hours
Low-Temp Storage	-40°C, 1008 hours
Thermal Shock	MIL-STD-750: Method 1056 0°C to 100°C, 5-minute dwell, 10-second transfer, 10 cycles
Resistance to Solder Heat	MIL-STD-750: Method 2031 260°C, 10 seconds
Solderability	ANSI/J-STD-002: Category 3
Lead Bend	MIL-STD-750: Method 2036, Condition E

Dimensions

DO-214AC (SMA)

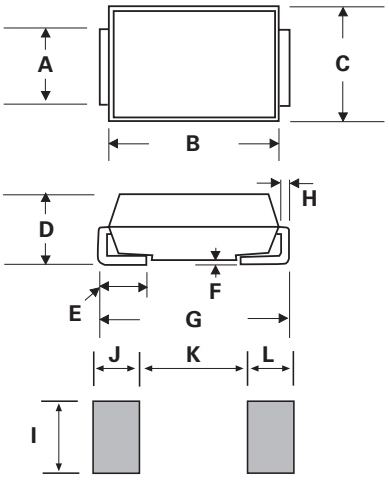

Dimensions	Inches		Millimeters	
	Min	Max	Min	Max
A	0.049	0.065	1.250	1.650
B	0.157	0.177	3.990	4.500
C	0.100	0.110	2.540	2.790
D	0.078	0.090	1.980	2.290
E	0.030	0.060	0.780	1.520
F	-	0.008	-	0.203
G	0.194	0.208	4.930	5.280
H	0.006	0.012	0.152	0.305
I	0.070	-	1.800	-
J	0.082	-	2.100	-
K	-	0.090	-	2.300
L	0.082	-	2.100	-

Dimensions — DO-15

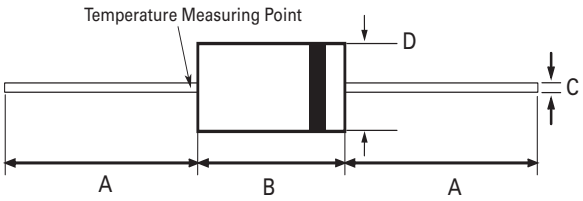

Dimension	Inches		Millimeters	
	Max	Max	Min	Max
A	1.000	-	25.40	-
B	0.230	0.300	5.80	7.60
C	0.028	0.034	0.71	0.86
D	0.104	0.140	2.60	3.60

©2015 Littelfuse, Inc
Specifications are subject to change without notice.

Revised: 08/11/15

Product Selector

Part Number	Switching Voltage Range		Blocking Voltage	Packages	
	V_{BO} Minimum	V_{BO} Maximum	V_{DRM}	DO-15	DO-214
K0820yURP	75	90	70	K0820GURP	K0820S1URP
K0900yURP	79	97	70	K0900GURP	K0900S1URP
K1050yURP	95	110	90	K1050GURP	K1050S1URP
K1100yURP	104	118	90	K1100GURP	K1100S1URP
K1200yURP	110	125	100	K1200GURP	K1200S1URP
K1300yURP	120	138	110	K1300GURP	K1300S1URP
K1400yURP	130	146	115	K1400GURP	K1400S1URP
K1500yURP	142	157	120	K1500GURP	K1500S1URP
K2000yURP	190	210	170	K2000GURP	K2000S1URP
K2200yURP	210	230	190	K2200GURP	K2200S1URP
K2300yURP	220	240	200	K2300GURP	K2300S1URP
K2400yURP	230	250	210	K2400GURP	K2400S1URP
K2500yURP	240	260	220	K2500GURP	K2500S1URP

Packing Options

Part Number	Marking	Weight	Package Mode	Packages	Base Quantity
Kxxx0S1URP	Kxxx	0.062g	Reel Pack	DO-214AC	5000
Kxxx0GURP	Kxxx	0.38g	Reel Pack	DO-15	5000

Part Numbering System

K xxx 0 S1 U RP

DEVICE TYPE
K: Sidac

MEDIAN VOLTAGE
082: 75V~ 90V
090: 79V~ 97V
105: 95V~110V
110: 104V~118V
120: 110V~125V
130: 120V~138V
140: 130V~146V
150: 142V~157V
200: 190V~210V
220: 210V~230V
230: 220V~240V
240: 230V~250V
250: 240V~260V

CONSTRUCTION VARIABLE
0: Single chip SIDAC

PACKAGE TYPE
S1: DO-214AC package
G: DO-15 package

UNIDIRECTIONAL

PACKAGING OPTION
RP: Tape and Reel

Part Marking System

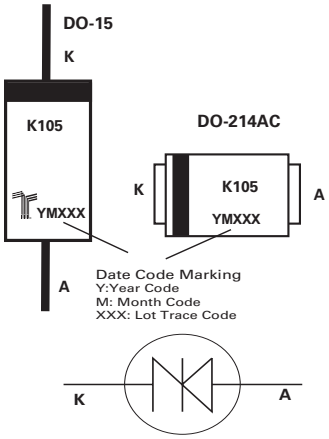

©2015 Littelfuse, Inc
Specifications are subject to change without notice.

Revised: 08/11/15

Tape and Reel Specification — DO-214AC

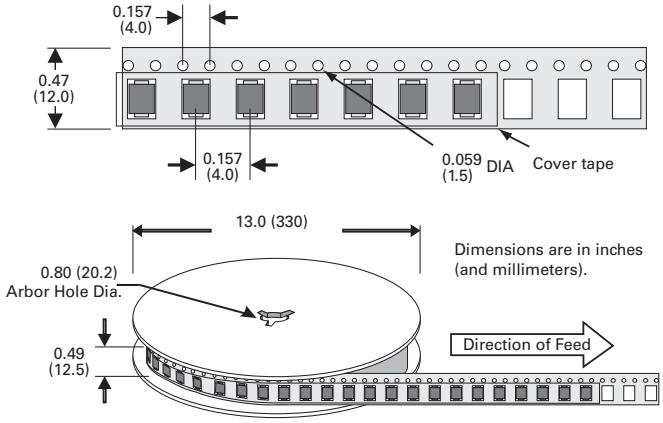

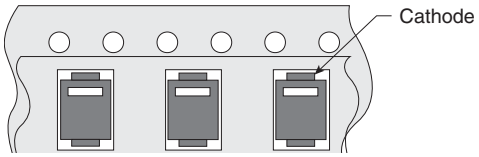

DO-15 Reel Pack (RP) Specifications

Meets all EIA RS-296 Standards

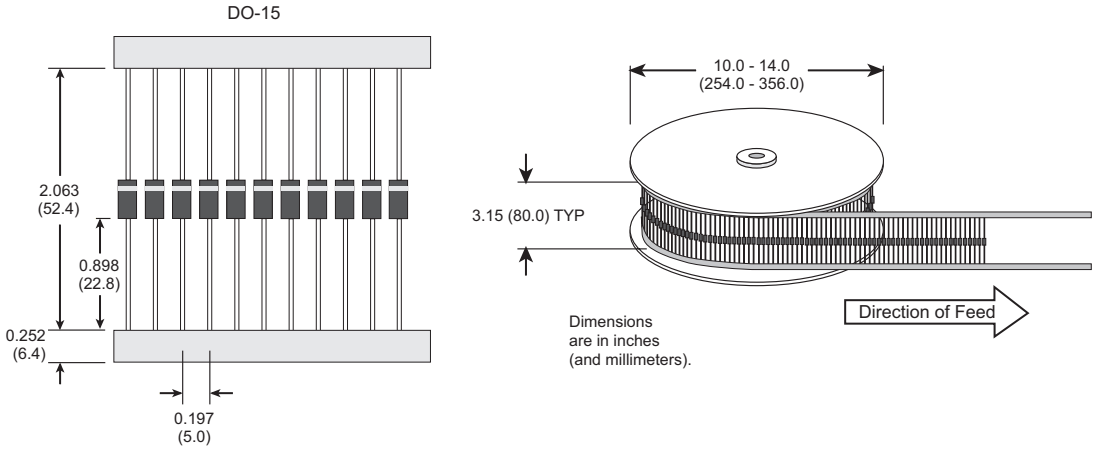

©2015 Littelfuse, Inc
Specifications are subject to change without notice.

Revised: 08/11/15

Мы молодая и активно развивающаяся компания в области поставок электронных компонентов. Мы поставляем электронные компоненты отечественного и импортного производства напрямую от производителей и с крупнейших складов мира.

Благодаря сотрудничеству с мировыми поставщиками мы осуществляем комплексные и плановые поставки широчайшего спектра электронных компонентов.

Собственная эффективная логистика и склад в обеспечивает надежную поставку продукции в точно указанные сроки по всей России.

Мы осуществляем техническую поддержку нашим клиентам и предпродажную проверку качества продукции. На все поставляемые продукты мы предоставляем гарантию .

Осуществляем поставки продукции под контролем ВП МО РФ на предприятия военно-промышленного комплекса России , а также работаем в рамках 275 ФЗ с открытием отдельных счетов в уполномоченном банке. Система менеджмента качества компании соответствует требованиям ГОСТ ISO 9001.

Минимальные сроки поставки, гибкие цены, неограниченный ассортимент и индивидуальный подход к клиентам являются основой для выстраивания долгосрочного и эффективного сотрудничества с предприятиями радиоэлектронной промышленности, предприятиями ВПК и научно-исследовательскими институтами России.

С нами вы становитесь еще успешнее!

Наши контакты:

Телефон: +7 812 627 14 35

Электронная почта: sales@st-electron.ru

Адрес: 198099, Санкт-Петербург, Промышленная ул, дом № 19, литера Н, помещение 100-Н Офис 331