# Internally Trimmed Precision IC Multiplier

Data Sheet

# AD632

## FEATURES

**Pretrimmed to ±0.5% maximum 4-quadrant error**
**All inputs (X, Y, and Z) differential, high impedance for $[(X_1 - X_2)(Y_1 - Y_2)/10] + Z_2$ transfer function**
**Scale-factor adjustable to provide up to ×10 gain**
**Low noise design: 90 mV rms, 10 Hz to 10 kHz**
**Low cost, monolithic construction**
**Excellent long-term stability**

## APPLICATIONS

**High quality analog signal processing**
**Differential ratio and percentage computations**
**Algebraic and trigonometric function synthesis**
**Accurate voltage controlled oscillators and filters**

## FUNCTIONAL BLOCK DIAGRAM

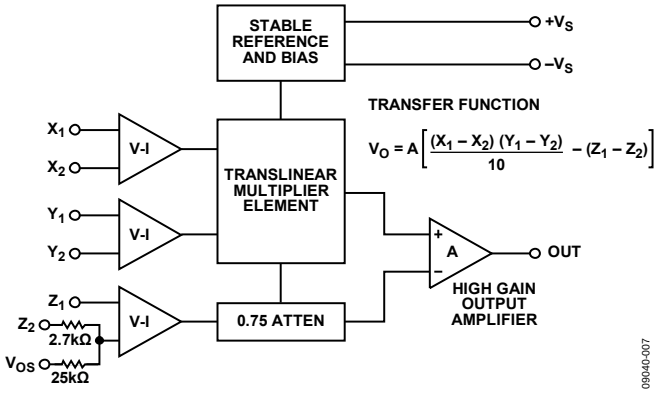


*Figure 1.*

## GENERAL DESCRIPTION

The AD632 is an internally trimmed monolithic four-quadrant multiplier/divider. The AD632B has a maximum multiplying error of ±0.5% without external trims.

Excellent supply rejection, low temperature coefficients, and long-term stability of the on-chip thin film resistors and buried zener reference preserve accuracy even under adverse conditions. The simplicity and flexibility of use provide an attractive alternative approach to the solution of complex control functions.

The AD632 is pin-for-pin compatible with the industry standard AD532 but with improved specifications and a fully differential high impedance Z input. The AD632 is capable of providing gains of up to ×10, frequently eliminating the need for separate instrumentation amplifiers to precondition the inputs. The AD632 can be effectively employed as a variable gain differential input amplifier with high common-mode rejection. The effectiveness of the variable gain capability is enhanced by the inherent low noise of the AD632 at 90 μV rms.

## PRODUCT HIGHLIGHTS

1. Guaranteed performance over temperature.
2. The AD632A and AD632B are specified for maximum multiplying errors of ±1.0% and ±0.5% of full scale, respectively, at +25°C and are rated for operation from −25°C to +85°C.
3. Maximum multiplying errors of ±2.0% (AD632S) and ±1.0% (AD632T) are guaranteed over the extended temperature range of −55°C to +125°C.
4. High reliability.
5. The AD632S and AD632T series are available with MIL-STD-883 Level B screening.
6. All devices are available in either the hermetically sealed TO-100 metal can or ceramic DIP package.

**Rev. C**
**Information furnished by Analog Devices is believed to be accurate and reliable. However, no responsibility is assumed by Analog Devices for its use, nor for any infringements of patents or other rights of third parties that may result from its use. Specifications subject to change without notice. No license is granted by implication or otherwise under any patent or patent rights of Analog Devices. Trademarks and registered trademarks are the property of their respective owners.**

**One Technology Way, P.O. Box 9106, Norwood, MA 02062-9106, U.S.A.**
**Tel: 781.329.4700** **www.analog.com**
**Fax: 781.461.3113** **©1979–2011 Analog Devices, Inc. All rights reserved.**

# TABLE OF CONTENTS

Features ... 1
Applications ... 1
Functional Block Diagram ... 1
General Description ... 1
Product Highlights ... 1
Revision History ... 2
Specifications ... 3
Absolute Maximum Ratings ... 5
Thermal Resistance ... 5
Pin Configurations and Function Descriptions ... 6
Typical Performance Characteristics ... 7
Operation As a Multiplier ... 8
Operation As a Divider ... 9
Outline Dimensions ... 10
Ordering Guide ... 11

## REVISION HISTORY

**12/11—Rev. B to Rev. C**

Updated Format ... Universal
Added Figure 1, Renumbered Sequentially ... 1
Deleted Chip Dimensions and Pad Layout Section ... 5
Changes to Figure 3 and Figure 4 ... 6
Added Table 3 and Table 4 ... 6
Changes to the Operations as a Divider Section ... 9
Updated Outline Dimensions ... 10

**4/10—Rev. A to Rev. B**

Changes to Pin Configurations and Product Highlights Sections ... 1
Changes to Thermal Characteristics Section ... 3
Updated Outline Dimensions ... 6
Changes to Ordering Guide ... 6

# SPECIFICATIONS

@ +25°C, $V_S$ = ±15 V, R ≥ 2 kΩ, unless otherwise noted. Specifications shown in boldface are tested on all production units at final electrical test. Results from those tests are used to calculate outgoing quality levels.

**Table 1.**

| Parameter | AD632A Min | AD632A Typ | AD632A Max | AD632B Min | AD632B Typ | AD632B Max | AD632S Min | AD632S Typ | AD632S Max | AD632T Min | AD632T Typ | AD632T Max | Units |
|---|---|---|---|---|---|---|---|---|---|---|---|---|---|
| MULTIPLIER PERFORMANCE | | | | | | | | | | | | | |
| Transfer Function | $\frac{(X_1-X_2)(Y_1-Y_2)}{10\,V}+Z_2$ | | | $\frac{(X_1-X_2)(Y_1-Y_2)}{10\,V}+Z_2$ | | | $\frac{(X_1-X_2)(Y_1-Y_2)}{10\,V}+Z_2$ | | | $\frac{(X_1-X_2)(Y_1-Y_2)}{10\,V}+Z_2$ | | | |
| Total Error[1] (−10 V ≤ X, Y ≤ +10 V) | | | **±1.0** | | | **±0.5** | | | **±1.0** | | | **±0.5** | % |
| $T_A$ = Min to Max | | **±1.5** | | | **±1.0** | | | | **±2.0** | | | **±1.0** | % |
| Total Error vs. Temperature | | ±0.022 | | | ±0.015 | | | | **±0.02** | | | **±0.01** | %/°C |
| Scale Factor Error | | | | | | | | | | | | | |
| (SF = 10,000 V Nominal)[2] | | ±0.25 | | | ±0.1 | | | ±0.25 | | | ±0.1 | | % |
| Temperature Coefficient of Scaling Voltage | | ±0.02 | | | **±0.01** | | | ±0.2 | | | | **±0.005** | %/°C |
| Supply Rejection (±15 V ± 1 V) | | ±0.01 | | | ±0.01 | | | ±0.01 | | | ±0.01 | | % |
| Nonlinearity | | | | | | | | | | | | | |
| X (X = 20 V p-p, Y = 10 V) | | ±0.4 | | | ±0.2 | ±0.3 | | ±0.4 | | | ±0.2 | ±0.3 | % |
| Y (Y = 20 V p-p, X = 10 V) | | ±0.2 | | | ±0.1 | ±0.1 | | ±0.2 | | | ±0.1 | ±0.1 | % |
| Feedthrough[3] | | | | | | | | | | | | | |
| X (Y Nulled, X = 20 V p-p 50 Hz) | | ±0.3 | | | ±0.15 | ±0.3 | | ±0.3 | | | ±0.15 | ±0.3 | % |
| Y (X Nulled, Y = 20 V p-p 50 Hz) | | ±0.01 | | | ±0.01 | ±0.1 | | ±0.01 | | | ±0.01 | ±0.1 | % |
| Output Offset Voltage | | ±5 | **±30** | | ±2 | ±15 | | ±5 | **±30** | | ±2 | ±15 | mV |
| Output Offset Voltage Drift | | 200 | | | 100 | | | | **500** | | | **300** | μV/°C |
| DYNAMICS | | | | | | | | | | | | | |
| Small Signal BW, ($V_{OUT}$ = 0.1 rms) | | 1 | | | 1 | | | 1 | | | 1 | | MHz |
| 1% Amplitude Error ($C_{LOAD}$ = 1000 pF) | | 50 | | | 50 | | | 50 | | | 50 | | kHz |
| Slew Rate ($V_{OUT}$ 20 p-p) | | 20 | | | 20 | | | 20 | | | 20 | | V/μs |
| Settling Time (to 1%, $\Delta V_{OUT}$ = 20 V) | | 2 | | | 2 | | | 2 | | | 2 | | μs |
| NOISE | | | | | | | | | | | | | |
| Noise Spectral Density | | | | | | | | | | | | | |
| SF = 10 V | | 0.8 | | | 0.8 | | | 0.8 | | | 0.8 | | μV/√Hz |
| SF = 3 V[4] | | 0.4 | | | 0.4 | | | 0.4 | | | 0.4 | | μV/√Hz |
| Wideband Noise | | | | | | | | | | | | | |
| A = 10 Hz to 5 MHz | | 1.0 | | | 1.0 | | | 1.0 | | | 1.0 | | mV/rms |
| P = 10 Hz to 10 kHz | | 90 | | | 90 | | | 90 | | | 90 | | μV/rms |
| OUTPUT | | | | | | | | | | | | | |
| Output Voltage Swing | **±11** | | | **±11** | | | **±11** | | | **±11** | | | V |
| Output Impedance (f ≤ 1 kHz) | | 0.1 | | | 0.1 | | | 0.1 | | | 0.1 | | Ω |
| Output Short-Circuit Current | | | | | | | | | | | | | |
| ($R_L$ = 0, $T_A$ = Min to Max) | | 30 | | | 30 | | | 30 | | | 30 | | mA |
| Amplifier Open-Loop Gain (f = 50 Hz) | | 70 | | | 70 | | | 70 | | | 70 | | dB |
| INPUT AMPLIFIERS (X, Y, and Z)[5] | | | | | | | | | | | | | |
| Signal Voltage Range (Differential or Common-Mode Operating Diff.) | | ±10 | | | ±10 | | | ±10 | | | ±10 | | V |
| Offset Voltage X, Y | | ±12 | | | ±12 | | | ±12 | | | ±12 | | V |
| Offset Voltage Drift X, Y | | ±5 | **±20** | | ±2 | **±10** | | ±5 | **±20** | | ±2 | **±10** | mV |
| Offset Voltage Z | | 100 | | | 50 | | | 100 | | | 150 | | μV/°C |
| Offset Voltage Z | | ±5 | **±30** | | ±2 | **±15** | | ±5 | **±30** | | ±2 | **±15** | mV |
| Offset Voltage Drift Z | | 200 | | | 100 | | | | 500 | | | 300 | μV/°C |

| Parameter | AD632A Min | AD632A Typ | AD632A Max | AD632B Min | AD632B Typ | AD632B Max | AD632S Min | AD632S Typ | AD632S Max | AD632T Min | AD632T Typ | AD632T Max | Units |
|---|---|---|---|---|---|---|---|---|---|---|---|---|---|
| CMRR | **60** | 80 | | **70** | 90 | | **60** | 80 | | **70** | 90 | | dM |
| Bias Current | | 0.8 | **2.0** | | 0.8 | **2.0** | | 0.8 | **2.0** | | 0.8 | **2.0** | µA |
| Offset Current | | 0.1 | | | 0.1 | | | 0.1 | | | 0.1 | | µA |
| Differential Resistance | | 10 | | | 10 | | | 10 | | | 10 | | MΩ |
| DIVIDER PERFORMANCE | | | | | | | | | | | | | |
| Transfer Function($X_1 > X_2$) | | $10\text{V}\frac{(Z_2-Z_1)}{(X_1-X_2)}+Y_1$ | | | $10\text{V}\frac{(Z_2-Z_1)}{(X_1-X_2)}+Y_1$ | | | $10\text{V}\frac{(Z_2-Z_1)}{(X_1-X_2)}+Y_1$ | | | $10\text{V}\frac{(Z_2-Z_1)}{(X_1-X_2)}+Y_1$ | | |
| Total Error[1] | | | | | | | | | | | | | |
| (X = 10 V, −10 V ≤ Z ≤ +10 V) | | ±0.75 | | | ±0.35 | | | ±0.75 | | | ±0.35 | | % |
| (X = 1 V, −1 V ≤ Z ≤ +1 V) | | ±2.0 | | | ±1.0 | | | ±2.0 | | | ±1.0 | | % |
| (0.1 V ≤ X ≤ 10 V, −10 V ≤ Z ≤ 10 V) | | ±2.5 | | | ±1.0 | | | ±2.5 | | | ±1.0 | | % |
| SQUARER PERFORMANCE | | | | | | | | | | | | | |
| Transfer Function | | $\frac{(X_1-X_2)^2}{10\text{V}}+Z_2$ | | | $\frac{(X_1-X_2)^2}{10\text{V}}+Z_2$ | | | $\frac{(X_1-X_2)^2}{10\text{V}}+Z_2$ | | | $\frac{(X_1-X_2)^2}{10\text{V}}+Z_2$ | | |
| Total Error (−10 V ≤ X ≤ 10 V) | | ±0.6 | | | ±0.3 | | | ±0.6 | | | ±0.3 | | % |
| SQUARE-ROOTER PERFORMANCE | | | | | | | | | | | | | |
| Transfer Function, ($Z_1 \le Z_2$) | | $\sqrt{10\text{V}(Z_2-Z_1)+X_2}$ | | | $\sqrt{10\text{V}(Z_2-Z_1)+X_2}$ | | | $\sqrt{10\text{V}(Z_2-Z_1)+X_2}$ | | | $\sqrt{10\text{V}(Z_2-Z_1)+X_2}$ | | |
| Total Error[1] (1 V ≤ Z ≤ 10 V) | | ±1.0 | | | ±0.5 | | | ±1.0 | | | ±0.5 | | % |
| POWER SUPPLY SPECIFICATIONS | | | | | | | | | | | | | |
| Supply Voltage | | | | | | | | | | | | | |
| Rated Performance | | ±15 | | | ±15 | | | ±15 | | | ±15 | | V |
| Operating | ±8 | | **±18** | ±8 | | **±18** | ±8 | | **±22** | ±8 | | **±22** | V |
| Supply Current | | | | | | | | | | | | | |
| Quiescent | | 4 | **6** | | 4 | 6 | | 4 | **6** | | 4 | 6 | mA |

[1] Figures given are percent of full-scale, ±10 V (that is, 0.01% = 1 mV).
[2] Can be reduced to 3 V using an external resistor between $-V_S$ and SF.
[3] Irreducible component due to nonlinearity: excludes effect of offsets.
[4] Using an external resistor adjusted to give a value of SF = 3 V.
[5] See the functional block diagram (Figure 1) for definition of sections.

# ABSOLUTE MAXIMUM RATINGS

## THERMAL RESISTANCE

$\theta_{JA}$ is specified for the worst-case conditions, that is, a device soldered in a circuit board for surface-mount packages.

**Table 2. Thermal Resistance**

| Package Type | $\theta_{JA}$ | $\theta_{JC}$ | Unit |
|---|---|---|---|
| 10-Lead TO-100 | 150 | 25 | °C/W |
| 14-Lead SBDIP | 95 | 25 | °C/W |

# PIN CONFIGURATIONS AND FUNCTION DESCRIPTIONS

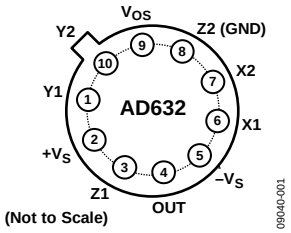


*Figure 2. Pin Configuration, H-Package, TO-100*

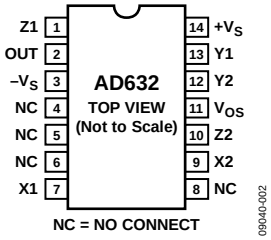


*Figure 3. Pin Configuration, D-Package, SBDIP*

**Table 3. Pin Function Descriptions, 10-Pin TO-100**

| Pin No. | Mnemonic | Description |
|---|---|---|
| 1 | Y1 | Y Multiplicand Noninverting Input. |
| 2 | $+V_S$ | Positive Supply Voltage. |
| 3 | Z1 | Summing Node Noninverting Input. |
| 4 | OUT | Product. |
| 5 | $-V_S$ | Negative Supply Voltage. |
| 6 | X1 | X Multiplicand Noninverting Input. |
| 7 | X2 | X Multiplicand Inverting Input. |
| 8 | Z2 | Summing Node Inverting Input. |
| 9 | $V_{OS}$ | Offset Voltage Adjustment. |
| 10 | Y2 | Y Multiplicand Inverting Input. |

**Table 4. Pin Function Descriptions, 14-Lead SBDIP**

| Pin No. | Mnemonic | Description |
|---|---|---|
| 1 | Z1 | Summing Node Noninverting Input. |
| 2 | OUT | Product. |
| 3 | $-V_S$ | Negative Supply Voltage. |
| 4, 5, 6, 8 | NC | No Connection. Do not connect to this pin. |
| 7 | X1 | X Multiplicand Noninverting Input. |
| 9 | X2 | X Multiplicand Noninverting Input. |
| 10 | Z2 | Summing Node Inverting Input. |
| 11 | $V_{OS}$ | Offset Voltage Adjustment. |
| 12 | Y2 | Y Multiplicand Inverting Input. |
| 13 | Y1 | Y Multiplicand Noninverting Input. |
| 14 | $+V_S$ | Positive Supply Voltage. |

# TYPICAL PERFORMANCE CHARACTERISTICS

Typical @ 25°C with ±$V_S$ = 15 V.

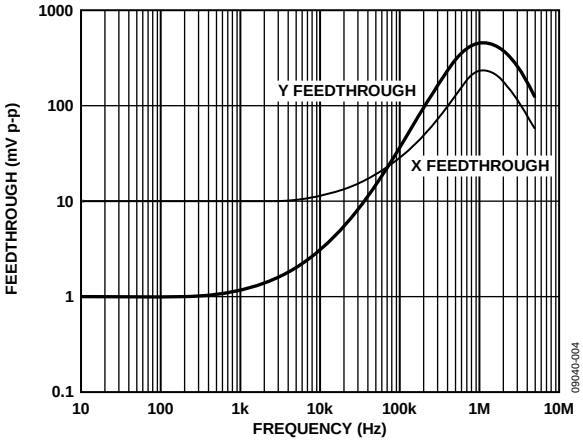


*Figure 4. AC Feedthrough vs. Frequency*

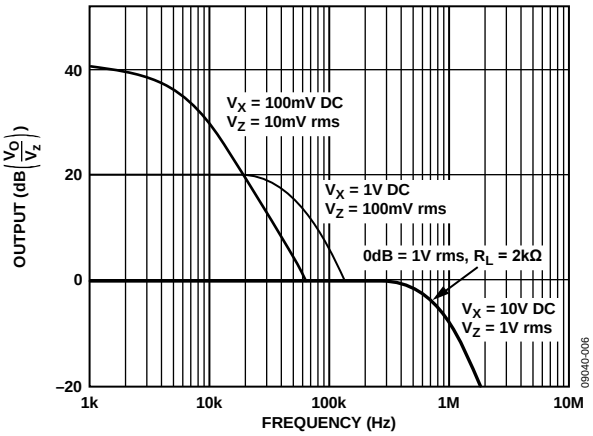


*Figure 6. Frequency Response vs. Divider Denominator Input Voltage*

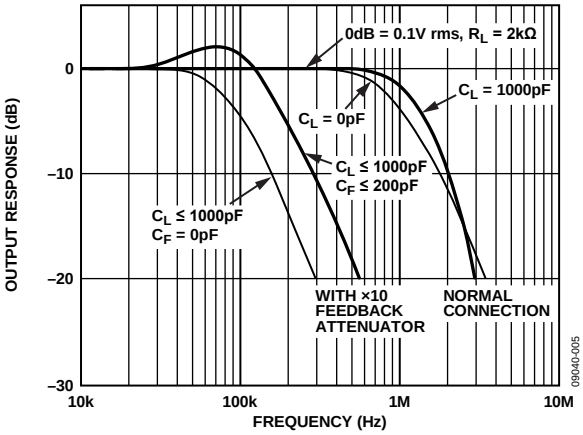


*Figure 5. Frequency Response as a Multiplier*

# OPERATION AS A MULTIPLIER

Figure 7 shows the basic connection for multiplication. Note that the circuit meets all specifications without trimming.

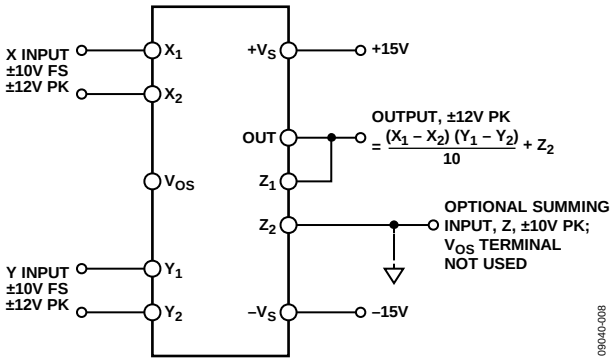


*Figure 7. Basic Multiplier Connection*

When needed, the user can reduce ac feedthrough to a minimum (as in a suppressed carrier modulator) by applying an external trim voltage (±30 mV range required) to the X or Y input. Figure 4 shows the typical ac feedthrough with this adjustment mode. Note that the feedthrough of the Y input is a factor of 10 lower than that of the X input and is to be used for applications where null suppression is critical.

The $Z_2$ terminal of the AD632 can be used to sum an additional signal into the output. In this mode, the output amplifier behaves as a voltage follower with a 1 MHz small signal bandwidth and a 20 V/µs slew rate. Always reference this terminal to the ground point of the driven system, particularly if this is remote. Likewise, reference the differential inputs to their respective signal common potentials to realize the full accuracy of the AD632.

A much lower scaling voltage can be achieved without any reduction of input signal range using a feedback attenuator, as shown in Figure 8. In this example, the scale is such that $V_{OUT} = XY$, so that the circuit can exhibit a maximum gain of 10. This connection results in a reduction of bandwidth to about 80 kHz without the peaking capacitor, $C_F$. In addition, the output offset voltage is increased by a factor of 10 making external adjustments necessary in some applications.

Feedback attenuation also retains the capability for adding a signal to the output. Signals can be applied to the Z terminal, where they are amplified by −10, or to the common ground connection where they are amplified by −1. Input signals can also be applied to the lower end of the 2.7 kΩ resistor, giving a gain of +9.

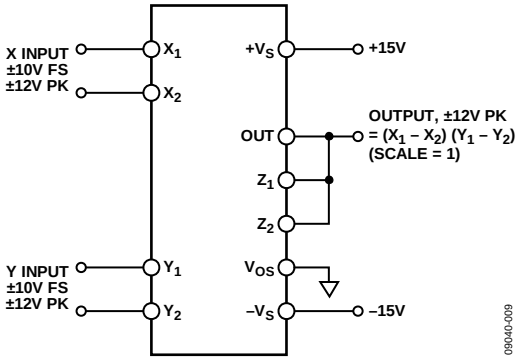


*Figure 8. Connections for Scale Factor of Unity*

# OPERATION AS A DIVIDER

Figure 9 shows the connection required for division. Unlike earlier products, the AD632 provides differential operation on both the numerator and the denominator, allowing the ratio of two floating variables to be generated. Further flexibility results from access to a high impedance summing input to $Y_1$. As with all dividers based on the use of a multiplier in a feedback loop, the bandwidth is proportional to the denominator magnitude, as shown in Figure 6.

The accuracy of the AD632 B-model is sufficient to maintain a 1% error over a 10 V to 1 V denominator range.

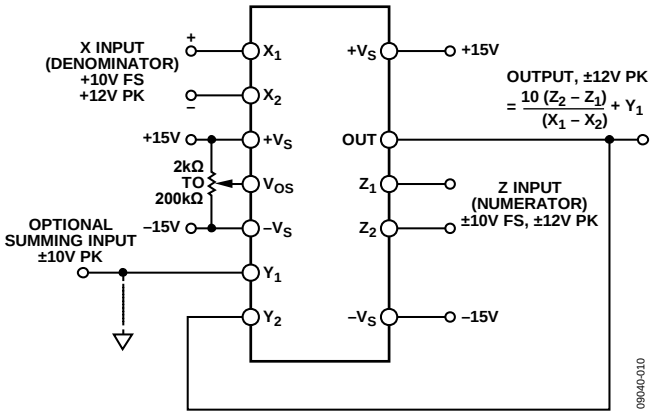


*Figure 9. Basic Divider Connection*

# OUTLINE DIMENSIONS

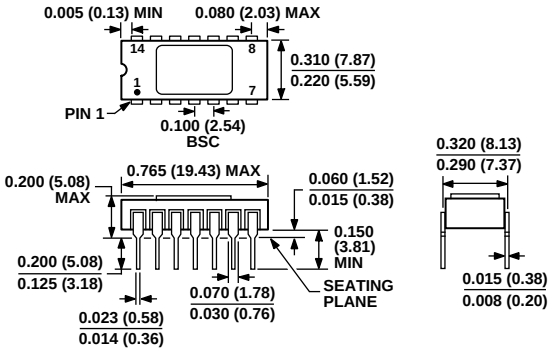


CONTROLLING DIMENSIONS ARE IN INCHES; MILLIMETER DIMENSIONS (IN PARENTHESES) ARE ROUNDED-OFF INCH EQUIVALENTS FOR REFERENCE ONLY AND ARE NOT APPROPRIATE FOR USE IN DESIGN.

*Figure 10. 14-Lead Side-Brazed Ceramic Dual In-Line Package [SBDIP] (D-14)*
*Dimensions shown in inches and (millimeters)*

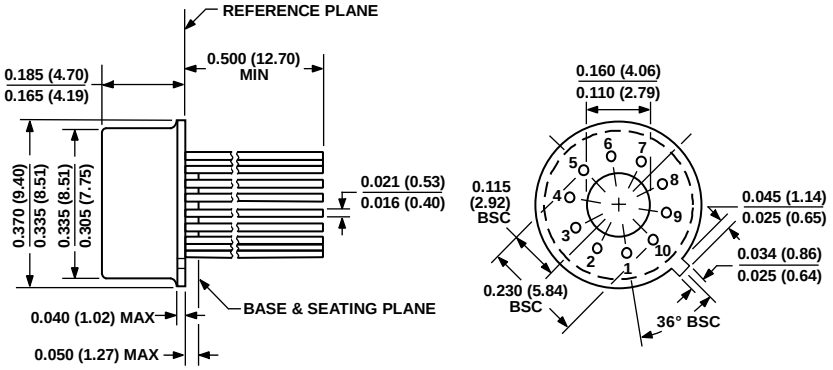


DIMENSIONS PER JEDEC STANDARDS MO-006-AF
CONTROLLING DIMENSIONS ARE IN INCHES; MILLIMETER DIMENSIONS (IN PARENTHESES) ARE ROUNDED-OFF INCH EQUIVALENTS FOR REFERENCE ONLY AND ARE NOT APPROPRIATE FOR USE IN DESIGN.

022306-A

*Figure 11. 10-Pin Metal Header Package [TO-100] (H-10)*
*Dimensions shown in inches and (millimeters)*

## ORDERING GUIDE

| Model[1] | Temperature Range | Package Description | Package Option |
|---|---|---|---|
| AD632AD | −25°C to +85°C | 14-Lead Side-Brazed Ceramic Dual In-Line Package [SBDIP] | D-14 |
| AD632ADZ | −25°C to +85°C | 14-Lead Side-Brazed Ceramic Dual In-Line Package [SBDIP] | D-14 |
| AD632AH | −25°C to +85°C | 10-Pin Metal Header Package [TO-100] | H-10 |
| AD632AHZ | −25°C to +85°C | 10-Pin Metal Header Package [TO-100] | H-10 |
| AD632BD | −25°C to +85°C | 14-Lead Side-Brazed Ceramic Dual In-Line Package [SBDIP] | D-14 |
| AD632BDZ | −25°C to +85°C | 14-Lead Side-Brazed Ceramic Dual In-Line Package [SBDIP] | D-14 |
| AD632BH | −25°C to +85°C | 10-Pin Metal Header Package [TO-100] | H-10 |
| AD632BHZ | −25°C to +85°C | 10-Pin Metal Header Package [TO-100] | H-10 |
| AD632SD | −55°C to +125°C | 14-Lead Side-Brazed Ceramic Dual In-Line Package [SBDIP] | D-14 |
| AD632SH | −55°C to +125°C | 10-Pin Metal Header Package [TO-100] | H-10 |
| AD632SH/883B | −55°C to +125°C | 10-Pin Metal Header Package [TO-100] | H-10 |
| AD632TD | −55°C to +125°C | 14-Lead Side-Brazed Ceramic Dual In-Line Package [SBDIP] | D-14 |
| AD632TD/883B | −55°C to +125°C | 14-Lead Side-Brazed Ceramic Dual In-Line Package [SBDIP] | D-14 |
| AD632TH | −55°C to +125°C | 10-Pin Metal Header Package [TO-100] | H-10 |
| AD632TH/883B | −55°C to +125°C | 10-Pin Metal Header Package [TO-100] | H-10 |

[1] Z = RoHS Compliant Part.

## NOTES

©1979–2011 Analog Devices, Inc. All rights reserved. Trademarks and registered trademarks are the property of their respective owners.
D09040-0-12/11(C)

Мы молодая и активно развивающаяся компания в области поставок электронных компонентов. Мы поставляем электронные компоненты отечественного и импортного производства напрямую от производителей и с крупнейших складов мира.

Благодаря сотрудничеству с мировыми поставщиками мы осуществляем комплексные и плановые поставки широчайшего спектра электронных компонентов.

Собственная эффективная логистика и склад в обеспечивает надежную поставку продукции в точно указанные сроки по всей России.

Мы осуществляем техническую поддержку нашим клиентам и предпродажную проверку качества продукции. На все поставляемые продукты мы предоставляем гарантию .

Осуществляем поставки продукции под контролем ВП МО РФ на предприятия военно-промышленного комплекса России , а также работаем в рамках 275 ФЗ с открытием отдельных счетов в уполномоченном банке. Система менеджмента качества компании соответствует требованиям ГОСТ ISO 9001.

Минимальные сроки поставки, гибкие цены, неограниченный ассортимент и индивидуальный подход к клиентам являются основой для выстраивания долгосрочного и эффективного сотрудничества с предприятиями радиоэлектронной промышленности, предприятиями ВПК и научно-исследовательскими институтами России.

С нами вы становитесь еще успешнее!

**Наши контакты:**

**Телефон:** +7 812 627 14 35

**Электронная почта:** sales@st-electron.ru

**Адрес:** 198099, Санкт-Петербург, Промышленная ул, дом № 19, литера Н, помещение 100-Н Офис 331