MIC2774

Dual Micro-Power Low Voltage Supervisor

General Description

The MIC2774 is a dual power supply supervisor that provides under-voltage monitoring, manual reset capability, and power-on reset generation in a compact 5-pin SOT package. Features include two under-voltage detectors, one fixed and one adjustable, and a choice of reset outputs. One under-voltage detector compares V_{DD} against a fixed threshold. Ten factory-programmed thresholds are available. The second, user-adjustable input is compared against a 300mV reference. This low reference voltage allows monitoring voltages lower than those supported by previous supervisor ICs.

The reset outputs are asserted at power-on and any time either voltage drops below the programmed threshold voltages and remains asserted for 140ms (min.) after they subsequently rise back above the threshold boundaries. Manual reset functionality can be provided by a switch connected between ground and the /MR input. A wide choice of voltage thresholds provides for a variety of supply voltages and tolerances. Hysteresis is included to prevent chattering due to noise. Typical supply current is a low 3.5µA.

Features

- Monitors two independent power supplies for under-voltage conditions
- One fixed and one user adjustable input
- Choice of factory-programmed thresholds
- Adjustable input can monitor supplies as low as 0.3V
- Generates 140ms (minimum) power-on reset pulse
- Manual reset input
- Choice of active-high, active-low, or open-drain active-low reset outputs
- Inputs may be pulled above V_{DD} (7V abs. max.)
- Open-drain output can be pulled above V_{DD} (7V abs max.)
- /RST output valid down to 1.2V
- Ultra-low supply current, 3.5µA typical
- Rejects brief input transients
- IttyBitty™ 5-lead SOT-23 package
- Pin compatible upgrade for MAX6306/09/12

Applications

- Monitoring processor ASIC, or FAGA core and I/O voltages
- PDAs, hand-held PCs
- Embedded controllers
- Telecommunications systems
- Power supplies
- Wireless / Cellular systems
- Networking hardware

Ordering Information

Part Number				Reset Output	Temperature Range	Package
Standard	Marking	Pb-Free	Marking			
MIC2774N-XXBM5	UGXX(1)	MIC2774N-XXYM5	UGXX(1)	Open-Drain. Active-Low (/RST)	-40°C to +85°C	SOT-23-5
MIC2774H-XXBM5	UHXX(1)	MIC2774H-XXYM5	UHXX(1)	Active-High. Complementary (RST)	-40°C to +85°C	SOT-23-5
MIC2774L-XXBM5	UIXX(1)	MIC2774L-XXYM5	UIXX(1)	Active-Low. Complementary (/RST)	-40°C to +85°C	SOT-23-5

Notes:
1. XX = Voltage options, see table on page 2. Underscore indicates a Pb-Free part.

Typical Application

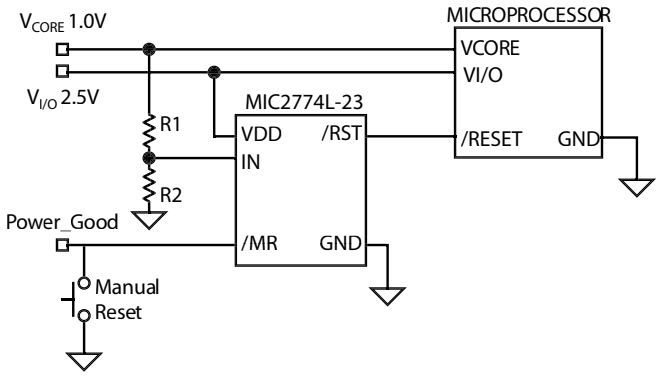

IttyBitty™ is a trademark of Micrel, Inc.

Micrel, Inc. • 2180 Fortune Drive • San Jose, CA 95131 • USA • tel + 1 (408) 944-0800 • fax + 1 (408) 474-1000 • http://www.micrel.com

Standard Voltage Options*

Voltage Code	Typical Application (V_{DD})	Nominal Threshold Voltage (V_{TH})
46	5.0V ±5%	4.68
44	5.0V ±10%	4.43
31	3.3V ±5%	3.09
29	3.3V ±10%	2.93
28	3.0V ±5%	2.81
26	2.85V ±5%	2.67
25	2.70V ±5%	2.53
23	2.5V ±5%	2.34
22	2.4V ±5%	2.25
17	1.8V ±5%	1.69

*There are ten standard versions available with an order increment of 3000 pieces. Samples of standard versions are normally available from stock. Contact factory for information on non-standard versions. Available in tape-and-reel only.

Pin Configuration

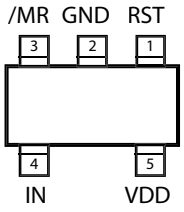

SOT-23-5 (M5)
"H" Version

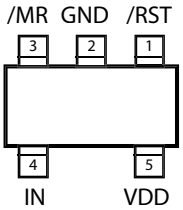

SOT-23-5 (M5)
"L" and "N" Version

Pin Description

Pin Number MIC2774H	Pin Number MIC2774L MIC2774N	Pin Name	Pin Function
1		RST	Digital (Output): Asserted high whenever V_{IN} or V_{DD} falls below the threshold voltage. It will remain asserted for no less than 140ms after V_{IN} and V_{DD} return above the threshold limits.
	1	/RST	Digital (Output): Asserted low whenever V_{IN} or V_{DD} falls below the threshold voltage. It will remain asserted for no less than 140ms after V_{IN} and V_{DD} return above the threshold limits. (open-drain for "N" version)
2	2	GND	Ground
3	3	/MR	Digital (Input): Driving this pin low initiates immediate and unconditional reset. Assuming V_{IN} and V_{DD} are above the thresholds when /MR is released (returns high), the reset output will be de-asserted no less than 140ms later. /MR may be driven by a logic signal or a mechanical switch. /MR has an internal pull-up to V_{DD} and may be left open if unused.
4	4	IN	Analog (Input): The voltage on this pin is compared to the internal 300mV reference. An under-voltage condition will trigger a reset sequence.
5	5	VDD	Analog (Input): Power supply input for internal circuitry and input to the fixed voltage monitor. The voltage on this pin is compared against the internal reference. An undervoltage condition will trigger a reset sequence.

Absolute Maximum Ratings (Note 1)

Supply Voltage (V_{DD}).....–0.3V to +7V
Input Voltages (V_{IN}, $V_{/MR}$) .....–0.3V to +7V
Output Voltages ($V_{/RST}$, V_{RST}).....–0.3V to +7V
RST, (/RST) Current 20mA
Storage Temperature (T_S) ..... –65°C to +150°C
ESD Rating, **Note 3**..... 1.5kV

Operating Ratings (Note 2)

Supply Voltage (V_{DD}) ..... +1.5V to +5.5V
Input Voltages (V_{IN}, $V_{/MR}$) .....–0.3V to +6.0V
Output Voltages
$V_{/RST}$ (N version), ...–0.3V to +6.0V
$V_{/RST}$, V_{RST} (H and L versions).....–0.3V to V_{DD}+0.3V
Ambient Temperature Range (T_A) ..... –40°C to +85°C
Package Thermal Resistance (θ_{JA}).....256°C/W

Electrical Characteristics

Note 5; T_A = +25°C, **bold** values indicate –40°C ≤ T_A ≤ +85°C; unless noted

Symbol	Parameter	Condition	Min	Typ	Max	Units
I_{DD}	Supply Current	$V_{DD} = V_{IN} = V_{TH}$ +1.6%, **Note 5**; /MR, RST, /RST open		3.5		µA
VDD VOLTAGE THRESHOLD						
	Under-Voltage Threshold On V_{DD} (See Standard Voltage Options Table)		**V_{TH}–1.5%**	V_{TH}	**V_{TH}+1.5%**	V
V_{HYST}	Hysteresis Voltage			1		%
IN, UNDER-VOLTAGE DETECTOR INPUT						
V_{REF}	Under-Voltage Threshold	**Note 5**	**295**	300	**305**	mV
V_{HYST}	Hysteresis Voltage			3		mV
I_{IN}	Input Current			5		pA
		$T_{MIN} \le T_A \le T_{MAX}$			**10**	nA
RST, /RST OUTPUTS						
t_{PROP}	Propagation Delay	$V_{IN} = (V_{REF(MAX)}$ + 100mV) to $V_{IN} = (V_{REF(MIN)}$ – 100mV), /MR = open;		20		µs
t_{RST}	Reset Pulse Width	$T_{MIN} \le T_A \le T_{MAX}$	**140**		**280**	ms
V_{OL}	RST or /RST Output Voltage Low	I_{SINK} = 1.6mA; $V_{DD} \ge$ 1.6V			**0.3**	V
		I_{SINK} = 100µA; $V_{DD} \ge$ 1.2V; **Note 4**			**0.3**	V
V_{OH}	RST or /RST Output Voltage High	I_{SOURCE} = 500µA; $V_{DD} \ge$ 1.5V	**$0.8V_{DD}$**			V
	(H and L Version Only)	I_{SOURCE} = 10µA; $V_{DD} \ge$ 1.2V; **Note 4**	**$0.8V_{DD}$**			V
/MR INPUTS						
V_{IH}	Input High Voltage	**Note 5**	**$0.7V_{DD}$**			V
V_{IL}	Input Low Voltage	**Note 5**			**$0.3V_{DD}$**	V
t_{PROP}	Propagation Delay	$V_{/MR} < (V_{IL}$ –100mV); **Note 5**		5		µs
t_{MIN}	Minimum Input Pulse Width	Reset Occurs, $V_{/MR} < V_{IL}$		33		ns
I_{PU}	Internal Pull-up Current	V_{IM} = 0V		100	**250**	nA
I_{IN}	Input Current, /MR	$V_{/MR} < V_{IL}$		100	**250**	nA

Note 1. Exceeding the absolute maximum rating may damage the device.

Note 2. The device is not guaranteed to function outside its operating rating.

Note 3. Devices are ESD sensitive. Handling precautions recommended. Human body model, 1.5k in series with 100pF.

Note 4. V_{DD} operating range is 1.5V to 5.5V. Output is guaranteed to be asserted down to V_{DD} = 1.2V.

Note 5. V_{DD} equals nominal "Typical Application (V_{DD})" as shown in "Standard Voltage Options Table."

Timing Diagram

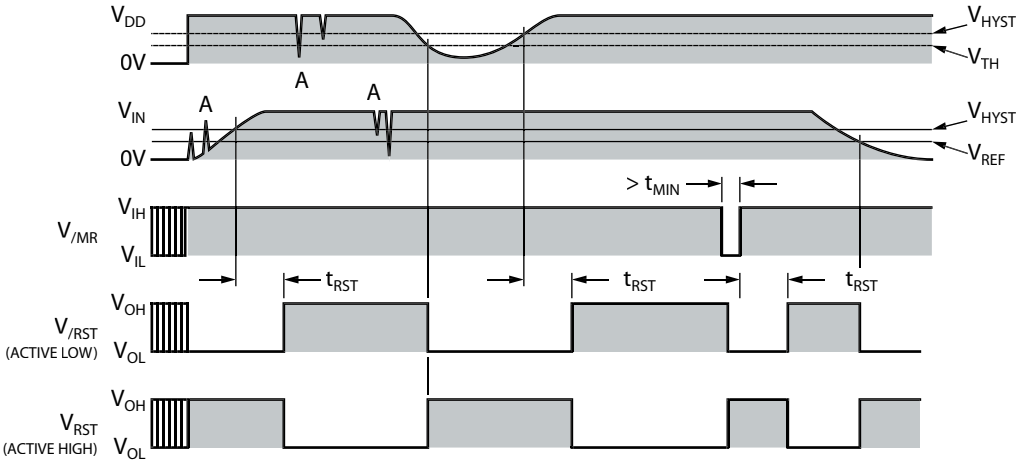

Propagation delays not shown for clarity.

Note A. The MIC2774 ignores very brief transients. See “Applications Information” for details.

Functional Diagram

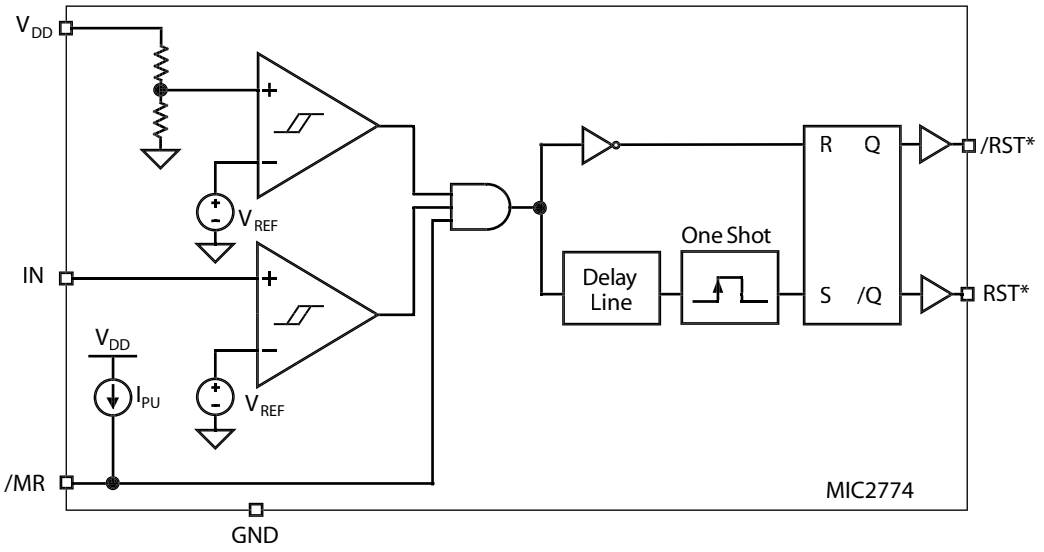

* Pinout and polarity vary by device type.
See ordering information table.

Functional Description

IN, Under-Voltage Detector Input

The voltage present at the IN pin is compared to the internal 300mV reference voltage. A reset is triggered if and when V_{IN} falls below V_{REF}. Typically, a resistor divider is used to scale the input voltage to be monitored such that V_{IN} will fall below V_{REF} as the voltage being monitored falls below the desired trip-point. Hysteresis is employed to prevent chattering due to noise. The comparator on the IN pin is relatively immune to very brief negative-going transients.

V_{DD} Input

The V_{DD} pin is both the power supply terminal and a monitored input voltage. The voltage at this pin is continually compared against the internal reference. The trip-point at which a reset occurs is factory programmed. A reset is triggered if and when V_{DD} falls below the trip-point. Hysteresis is employed to prevent chattering due to noise. The comparator on the V_{DD} input is relatively immune to very brief negative-going transients.

RST, /RST Reset Output

Typically, the MIC2774 is used to monitor the power supplies of intelligent circuits such as microcontrollers and microprocessors. By connecting the appropriate reset output of a MIC2774 to the reset input of a µC or µP, the processor will be properly reset at power-on and during power-down and brown-out conditions. In addition, asserting /MR, the manual reset input, will activate the reset function.

The reset output is asserted any time /MR is asserted or if V_{IN} or V_{DD} drops below the corresponding threshold voltage. The reset output remains asserted for t_{RST}(min) after V_{IN} and/or V_{DD} subsequently return above the threshold boundaries and/or /MR is released. A reset pulse is also generated at power-on. Hysteresis is included in the comparators to prevent chattering of the output due to noise.

/MR, Manual Reset Input

The ability to initiate a reset via external logic or a manual switch is provided in addition to the MIC2774's automatic supervisory functions. Driving the /MR input to a logic low causes an immediate and unconditional reset to occur. Assuming V_{IN} and V_{DD} are within tolerance when /MR is released (returns high), the reset output will be de-asserted no less than t_{RST} later. /MR may be driven by a logic signal, or mechanical switch. Typically, a momentary push-button switch is connected such that /MR is shorted to ground when the switch contacts close. Switch de-bouncing is performed internally; the switch may be connected directly between /MR and GND. /MR is internally pulled-up to V_{DD} and may be left open if unused.

Application Information

Programming the Voltage Threshold

Referring to the "Typical Application Circuit", the voltage threshold on the IN pin is calculated as follows:

$$V_{TH} = V_{REF} \times \frac{(R1 + R2)}{R2}$$

where V_{REF} = 0.300V

In order to provide the additional criteria needed to solve for the resistor values, the resistors can be selected such that the two resistors have a given total value, that is, R1 + R2 = R_{TOTAL}. Imposing this condition on the resistor values provides two equations that can be solved for the two unknown resistor values. A value such as 1MΩ for R_{TOTAL} is a reasonable choice since it keeps quiescent current to a generally acceptable level while not causing any measurable errors due to input bias currents. The larger the resistors, the larger the potential errors due to input bias current (I_{IN}). The maximum recommended value of R_{TOTAL} is 3MΩ.

Applying this criteria and rearranging the V_{TH} expression to solve for the resistor values gives:

$$R2 = \frac{(R_{TOTAL})(V_{REF})}{V_{TH}}$$

$$R1 = R_{TOTAL} - R2$$

Application Example

Figure 1 below illustrates a hypothetical MIC2774L-23 application in which the MIC2774L-23 is used to monitor the core and I/O supplies of a high-performance CPU or DSP. The core supply, V_{CORE}, in the example is 1.0V ±5%. The main power rail and I/O voltage, $V_{I/O}$, is 2.5V ±5%. As shown in Figure 1, the MIC2774 is powered by $V_{I/O}$. The minimum value of $V_{I/O}$ is 2.5V –5% = 2.375V; the maximum is 2.5V +5% = 2.625V. This is well within the device's supply range of 1.5V to 5.5V.

Resistors R1 and R2 must be selected to correspond to the V_{CORE} supply of 1.0V. The goal is to insure that the core supply voltage is adequate to insure proper operation, i.e., V_{CORE} ≥ (1.0V –5%) = 0.950V. Because there is always a small degree of uncertainty due to the accuracy of the resistors, variations in the devices' voltage reference, etc., the threshold will be set slightly below this value. The potential variation in the MIC2774's voltage reference (V_{REF}) is specified as ±1.5%. The resistors chosen will have their own tolerance specification. This example will assume the use of 1% accurate resistors. The potential worst-case error contribution due to input bias current can be calculated once the resistor values are chosen. If the guidelines above regarding the maximum total value of R1+R2 are followed, this error contribution will be very small thanks to the MIC2774's very low input bias current.

To summarize, the various potential error sources are:

- Variation in V_{REF}: specified at ±1.5%
- Resistor tolerance:
  chosen by designer (typically ≤ ±1%)
- Input bias current, I_{IN}:
  calculated once resistor values are known, typically very small

Taking the various potential error sources into account, the threshold voltage will be set slightly below the minimum V_{CORE} specification of 0.950V so that when the actual threshold voltage is at its maximum, it will not intrude into the normal operating range of V_{CORE}. The target threshold voltage will be set as follows:

Given that the total tolerance on V_{TH} for the IN pin is [V_{REF} tolerance] + [resistor tolerance]

= ±1.5% + ±1% = ±2.5%,

and $V_{TH(max)} = V_{CORE(min)}$,

then $V_{CORE(min)} = V_{TH} + 2.5\% \, V_{TH} = 1.025 \, V_{TH}$,

therefore, solving for V_{TH} results in

$$V_{TH} = \frac{V_{CORE(min)}}{1.025} = \frac{0.950}{1.025} = 0.9268V$$

Solving for R1 and R2 using this value for V_{TH} and the equations above yields:

R1 = 676.3kΩ ≈ 673kΩ

R2 = 323.7kΩ ≈ 324kΩ

The resulting circuit is shown in Figure 1.

Input Bias Current Effects

Now that the resistor values are known, it is possible to calculate the maximum potential error due to input bias current, I_{IN}. As shown in the "Electrical Characteristics" table, the maximum value of I_{IN} is 10nA. (Note that the typical value is a much smaller 5pA!) The magnitude of the offset caused by I_{IN} is given by:

$$V_{ERROR} = I_{IN(max)} \times (R1 \,||\, R2) =$$

$$V_{ERROR} = \pm 1 \times 10^{-8} A \times 2.189 \times 10^{5} \Omega =$$

$$V_{ERROR} = \pm 2.189 \times 10^{-3} V =$$

$$V_{ERROR} = \pm 2.189 mV$$

The typical error is about three orders of magnitude lower than this - close to one *microvolt*! Generally, the error due to input bias can be discounted. If it is to be taken into account, simply adjust the target threshold voltage downward by this amount and recalculate R1 and R2. The resulting value will be very close to optimum. If accuracy is more important than the quiescent current in the resistors, simply reduce the value of R_{TOTAL} to minimize offset errors.

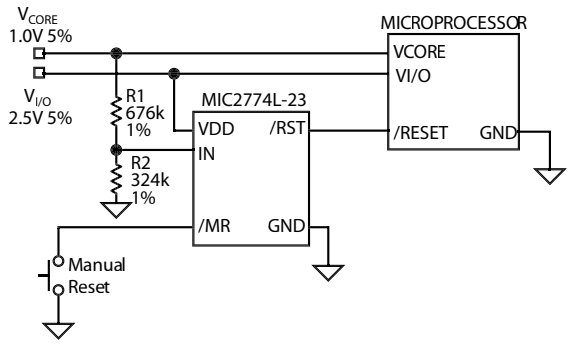

Figure 1. MIC2774 Example Design

Interfacing to Processors With Bidirectional Reset Pins

Some microprocessors have reset signal pins that are bi-directional, rather than input only. The Motorola 68HC11 family is one example. Because the MIC2774N's output is open-drain, it can be connected directly to the processor's reset pin using only the pull-up resistor normally required. See Figure 2.

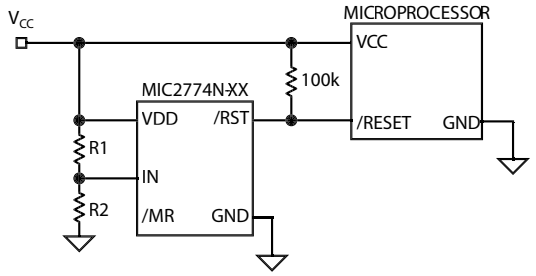

Figure 2. Interfacing to Bidirectional Reset Pin

Transient response

The MIC2774 is inherently immune to very short negative-going "glitches." Very brief transients may exceed the voltage thresholds without tripping the output.

As shown in Figure 3a and 3b, in general the narrower the transient, the deeper the threshold overdrive that will be ignored by the MIC2774. The graphs represent the typical allowable transient duration for a given amount of threshold overdrive that will not generate a reset.

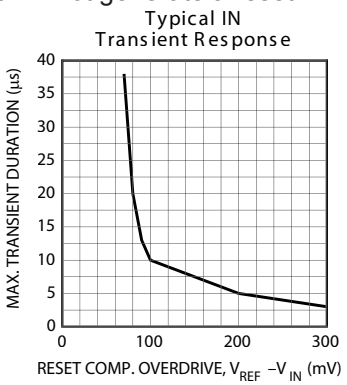

Figure 3a. Typical INPUT Transient Response

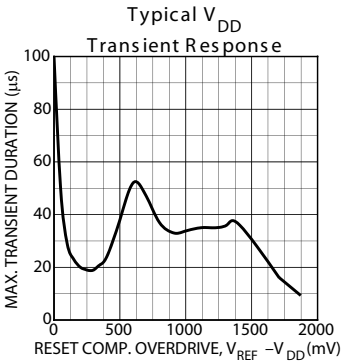

Figure 3b. Typical V_{DD} Transient Response

Ensuring Proper Operation at Low Supply

At levels of V_{DD} below 1.2V, the MIC2774's reset output cannot turn on sufficiently to produce a valid logic-low on /RST. In this situation, circuits driven by /RST could be allowed to float, causing undesired operation. (In most cases, however, it is expected that the circuits driven by the MIC2774L will be similarly inoperative at $V_{DD} \leq 1.2V$.)

If a given application requires that /RST be valid below V_{DD} = 1.2V, this can be accomplished by adding a pull-down resistor to the /RST output. A value of 100kΩ is recommended as this is usually an acceptable compromise of quiescent current and pull-down current. The resistor's value is not critical, however. See Figure 4.

The statements above also apply to the MIC2774H's RST output. That is, to ensure valid RST signal levels at V_{DD} < 1.2V, a pull-up resistor (as opposed to a pull-down) should be added to the RST output. A value of 100kΩ is typical for this application as well. See Figure 5.

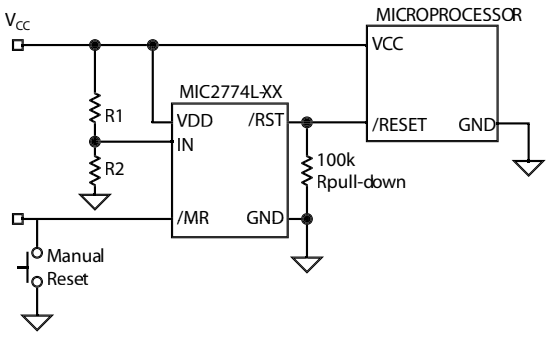

Figure 4. MIC2774L Valid /RST Below 1.2V

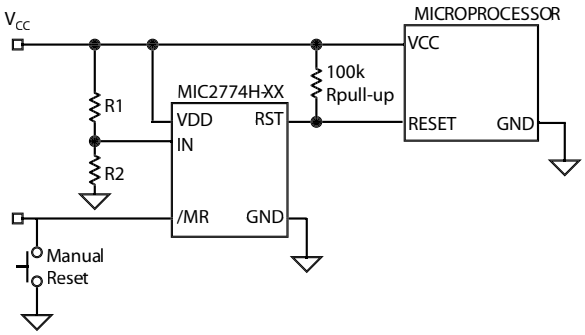

Figure 5. MIC2774H Valid RST Below 1.2V

Package Information

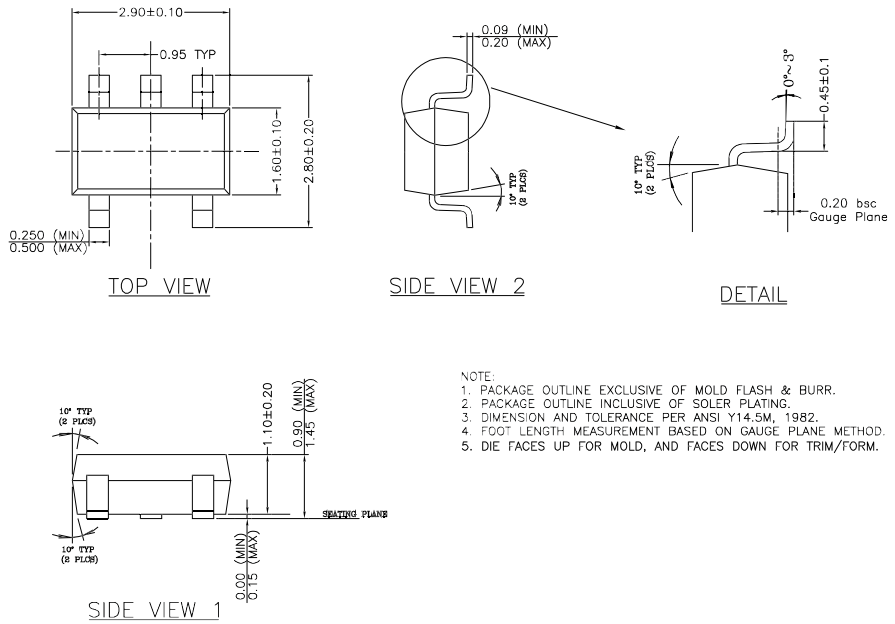

NOTE:
1. PACKAGE OUTLINE EXCLUSIVE OF MOLD FLASH & BURR.
2. PACKAGE OUTLINE INCLUSIVE OF SOLER PLATING.
3. DIMENSION AND TOLERANCE PER ANSI Y14.5M, 1982.
4. FOOT LENGTH MEASUREMENT BASED ON GAUGE PLANE METHOD.
5. DIE FACES UP FOR MOLD, AND FACES DOWN FOR TRIM/FORM.

SOT-23-5 (M5)

MICREL INC. 2180 FORTUNE DRIVE SAN JOSE, CA 95131 USA
TEL + 1 (408) 944-0800 FAX + 1 (408) 474-1000 WEB http://www.micrel.com

This information furnished by Micrel in this data sheet is believed to be accurate and reliable. However no responsibility is assumed by Micrel for its use. Micrel reserves the right to change circuitry and specifications at any time without notification to the customer.

Micrel Products are not designed or authorized for use as components in life support appliances, devices or systems where malfunction of a product can reasonably be expected to result in personal injury. Life support devices or systems are devices or systems that (a) are intended for surgical implant into the body or (b) support or sustain life, and whose failure to perform can be reasonably expected to result in a significant injury to the user. A Purchaser's use or sale of Micrel Products for use in life support appliances, devices or systems is a Purchaser's own risk and Purchaser agrees to fully indemnify Micrel for any damages resulting from such use or sale.

© 2004 Micrel Incorporated

Мы молодая и активно развивающаяся компания в области поставок электронных компонентов. Мы поставляем электронные компоненты отечественного и импортного производства напрямую от производителей и с крупнейших складов мира.

Благодаря сотрудничеству с мировыми поставщиками мы осуществляем комплексные и плановые поставки широчайшего спектра электронных компонентов.

Собственная эффективная логистика и склад в обеспечивает надежную поставку продукции в точно указанные сроки по всей России.

Мы осуществляем техническую поддержку нашим клиентам и предпродажную проверку качества продукции. На все поставляемые продукты мы предоставляем гарантию .

Осуществляем поставки продукции под контролем ВП МО РФ на предприятия военно-промышленного комплекса России , а также работаем в рамках 275 ФЗ с открытием отдельных счетов в уполномоченном банке. Система менеджмента качества компании соответствует требованиям ГОСТ ISO 9001.

Минимальные сроки поставки, гибкие цены, неограниченный ассортимент и индивидуальный подход к клиентам являются основой для выстраивания долгосрочного и эффективного сотрудничества с предприятиями радиоэлектронной промышленности, предприятиями ВПК и научно-исследовательскими институтами России.

С нами вы становитесь еще успешнее!

Наши контакты:

Телефон: +7 812 627 14 35

Электронная почта: sales@st-electron.ru

Адрес: 198099, Санкт-Петербург, Промышленная ул, дом № 19, литера Н, помещение 100-Н Офис 331