SY88022L

11.3Gbps Laser Diode Driver

Description

The SY88022L is a single 3.3V supply, small form factor driver for telecom/datacom applications using FP/DFB lasers at data rates up to 11.3Gbps. The driver can deliver modulation current up to 60mA and a bias current up to 80mA

All support documentation can be found on Micrel's web site at: www.micrel.com.

.

Features

- Operates from a single 3.3V supply
- Operation up to 11.3Gbps
- Modulation current up to 60mA
- Bias current up to 80mA
- Available in a small form factor 3mm x 3mm QFN package

Applications

- Multi-rate LAN, MAN applications up to 11.3Gbps: 8xFC, 10G GbE, SONET OC-192 and SDH STM-64
- SFP+, XFP, XPAK, XENPAK, X2, MSA 300 optical modules

Typical Application

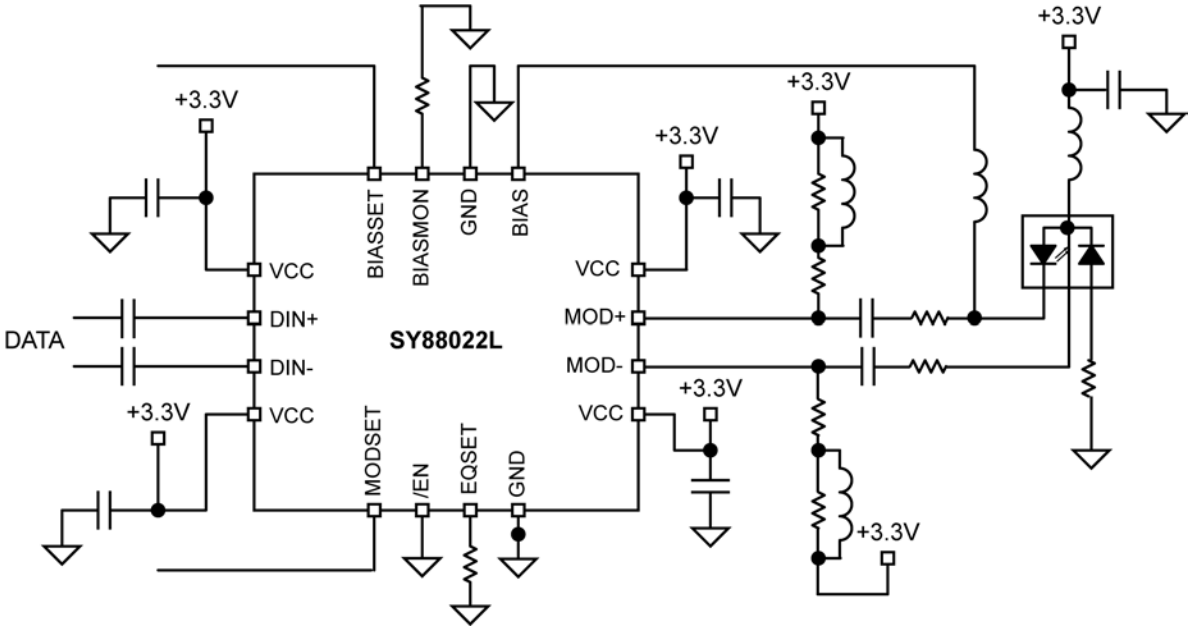

Ordering Information[1]

Part Number	Voltage	Temperature Range	Package	Lead Finish
SY88022LMG	3.3V	–40° to +85°C	QFN-16	NiPdAu Pb-Free
SY88022LMGTR[2]	3.3V	–40° to +85°C	QFN-16	NiPdAu Pb-Free

Notes:

1. Contact factory for die availability. Dice are guaranteed at T_A = +25°C, DC Electricals only.
2. Tape and Reel.

Pin Configuration

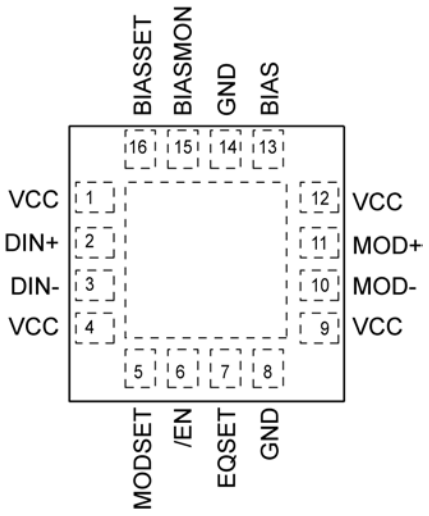

16-Pin QFN

Pin Description

Pin Number	Pin Name	Pin Function
1, 4, 9, 12	VCC	Supply Voltage. Bypass with a 0.1µF//0.01µF low ESR capacitor as close to the VCC pins as possible.
8, 14	GND	Ground. Ground and exposed pad must be connected to the plane of the most negative potential.
2	DIN+	Non-inverting input data. Internally terminated with 50Ω to VCC.
3	DIN–	Inverting input data. Internally terminated with 50Ω to VCC.
5	MODSET	Modulation current setting and control. Apply a voltage within the range 0V to1.2V to this pin to set the modulation current. Input impedance 25kΩ.
6	/EN	Active Low TTL. Internal 75kΩ pull down to GND. The driver is enabled when this pin is unconnected or /EN is asserted low and disabled when /EN asserted high.
7	EQSET	Install a resistor from this pin to GND to set the desired equalization level. 0Ω will provide maximum equalization and 2kΩ or higher will provide negligible equalization. Leave open if no equalization is needed.
10	MOD–	Inverted modulation current output. Provides modulation current when input data is negative.
11	MOD+	Non-inverted modulation current output. Provides modulation current when input data is positive.
13	BIAS	BIAS Current Output.
15	BIASMON	Bias Current Monitor. Install an external resistor from this pin to GND to convert the output current to a voltage proportional to the bias current.
16	BIASSET	Bias current setting and control. Apply a voltage within the range 0V to 1.2V to this pin to set the bias current. Input impedance 25kΩ.

Truth Table

DIN+	DIN-	/EN	MOD+[1]	MOD-	Laser Output[2]
L	H	L	H	L	L
H	L	L	L	H	H
X	X	H	H	H	L

Notes:

1. I_{MOD} = 0 when MOD+ = H.
2. Assuming that the laser cathode is tied to MOD+.

Absolute Maximum Ratings[1]

Supply Voltage (V_{IN}) ..... –0.5V to +4.0V
CML Input Voltage (V_{IN}) ..... V_{CC}–1.2V to V_{CC}+0.5V
TTL Control Input Voltage (V_{IN}) ..... 0V to V_{CC}
Lead Temperature (soldering, 20sec.) ..... +260°C
Storage Temperature (T_s) ..... –65°C to +150°C

Operating Ratings[2]

Supply Voltage (V_{CC}) ..... +3.0V to +3.6V
Ambient Temperature (T_A) ..... –40°C to +85°C
Package Thermal Resistance[3]
QFN
(θ_{JA}) Still-air ..... 60°C/W
(ψ_{JB}) ..... 33°C/W

DC Electrical Characteristics

T_A = –40°C to +85°C and V_{CC} = +3.0V to +3.6V, unless otherwise noted. Typical values are V_{CC} = +3.3V, T_A = 25°C, I_{MOD} = 30mA, I_{BIAS} = 30mA.

Symbol	Parameter	Condition	Min	Typ	Max	Units
I_{CC}	Power Supply Current	Modulation and bias currents excluded		65	95[4]	mA
V_{MOD_MIN}	Minimum Voltage Required at the Driver Output (headroom) for Proper Operation		1.2			V
V_{BIAS_MIN}	Minimum Voltage Required at the BIAS Output (headroom) for Proper Operation		1.2			V
R_{IN}	Input Resistance, Single Ended		45	50	55	Ω
V_{ID}	Differential Input Voltage Swing		100		1000	mV_{pp}
V_{IL}	/EN Input Low				0.8	V
V_{IH}	/EN Input High		2			V
I_{BIAS}	Bias Current		10		80	mA
I_{Bias_OFF}	Bias OFF Current	Current at BIAS when the device is disabled			150	µA
RMODSET	Input Resistance at MODSET Pin			25		kΩ
VMODSET	Voltage Range at MODSET Pin	IMOD range 10mA to 60mA			1.2	V
RBIASSET	Input Resistance at BIASSET Pin			25		kΩ
VBIASSET	Voltage Range at BIASSET Pin	IBIAS range 10mA to 80mA			1.2	V

Notes:

1. Exceeding the absolute maximum rating may damage the device.
2. The device is not guaranteed to function outside its operating rating.
3. Package Thermal Resistance assumes exposed pad is soldered (or equivalent) to the devices most negative potential on the PCB. θ_{JB} uses a 4-layer and θ_{JA} in still air unless otherwise stated.
4. Maximum I_{CC} measured with I_{MOD} = 60mA and I_{BIAS} = 80mA and MOD+/MOD- tied to VCC.

AC Electrical Characteristics

T_A = –40°C to +85°C and V_{CC} = +3.0V to +3.6V, unless otherwise noted. Typical values are V_{CC} = +3.3V, T_A = 25°C, I_{MOD} = 30mA, I_{BIAS} = 30mA.

Symbol	Parameter	Condition	Min	Typ	Max	Units
	Data Rate	NRZ			11.3	Gbps
I_{MOD}[5]	Modulation Current	AC-coupled	10		60[6]	mA
I_{MOD_OFF}	Modulation OFF Current	Current at MOD+ and MOD- when the device is disabled			150	µA
t_r	Output Current Rise Time	20% to 80%, 25Ω load		25	35	ps
t_f	Output Current Fall Time	20% to 80%, 25Ω load		25	35	ps
DJ	Deterministic Jitter	K25.8 pattern at 11.3Gbps, V_{IN} = 200mV_{PP}		4		ps_{PP}
RJ	Random Jitter	K25.8 pattern at 11.3Gbps, V_{IN} = 200mV_{PP}		0.3		ps_{PP}

Notes:

5. **I_{MOD}** is defined as the current going into the external load, which is equal to the total current of the output device subtracted by the current going into the internal 50Ω pull-up.
6. $I_{MOD(MAX)}$ is defined for a 25Ω external load.

Typical Characteristics

IBIAS / IBIASMON vs I_{BIAS}

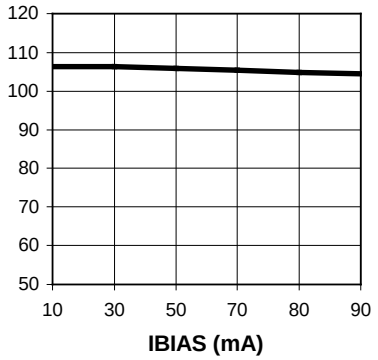

Bias Gain

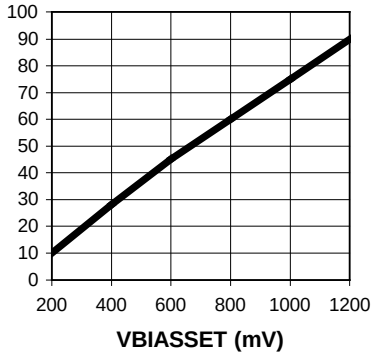

Modulation Gain

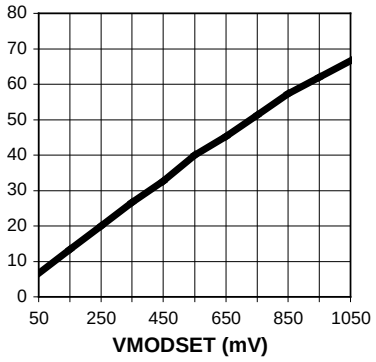

Note:
I_{MOD} is defined for a 25Ω external load.

Functional Characteristics

Electrical Eye Diagram
PRBS 2^7-1 @10.3125Gbps,
R_L = 50Ω, I_{MOD} = 25mA

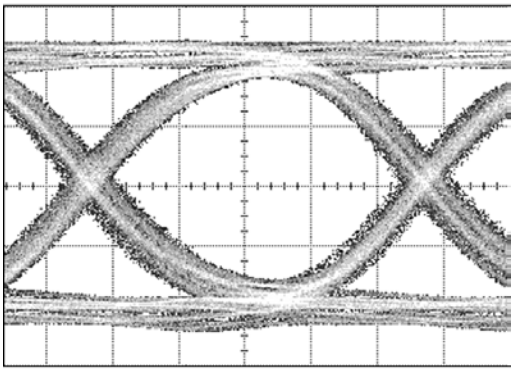

TIME (20ps/div.)

Input and Output Stages

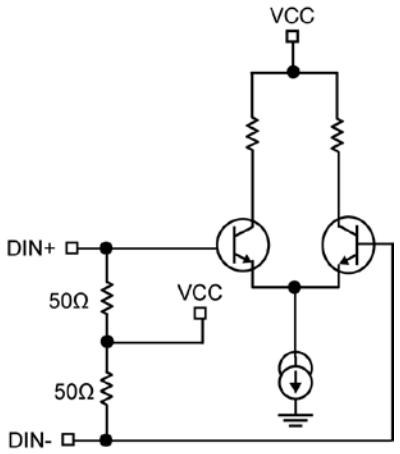

Figure 1a. Simplified Input Stage

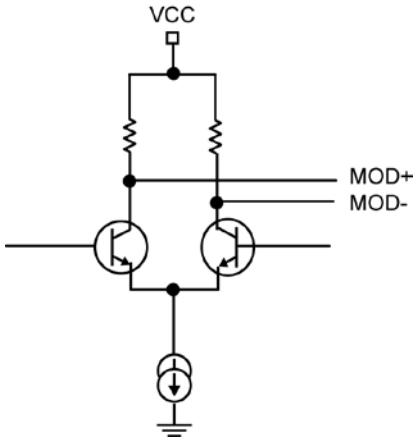

Figure 1b. Simplified Output Stage

Interfacing the Input to Differential Logic Drivers

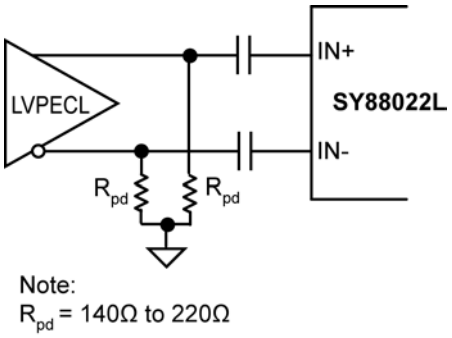

Figure 2a. AC-Coupling to LVPECL Driver

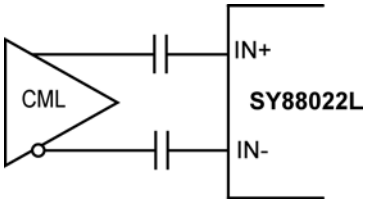

Figure 2b. AC-Coupling to CML Driver

Functional Diagram

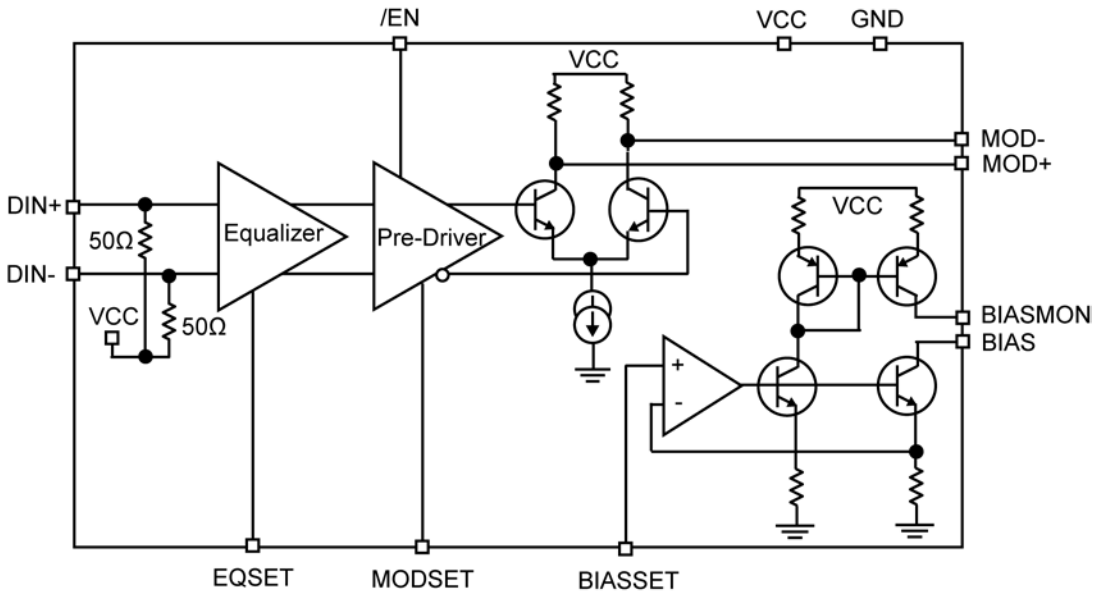

Functional Description

As shown on the block diagram above, the driver is composed from an input equalizer, and a modulation block consisting of a pre-driver, and a current source.

Equalizer

The input equalizer allows for compensation of up to 9" of FR4 microstrip trace or equivalent. The equalization restores the losses in high frequency components of the signal caused by its travel on the line card traces and through the connectors between the line card and the module
before it reaches the input stage. The amount of equalization is programmable with a resistor from pin 7 to ground.

Modulator

The modulator consists of a pre-driver and a current source. The modulation current is set in the pre-driver by applying a voltage within the range 0V to 1.2V to pin 5 (MODSET). The pre-driver provides the current to the output stage, which consists of a current source composed from a differential pair which collectors are connected to MOD+/MOD- pins and have 50Ω internal termination to VCC. The Modulation gain curve on page 6 shows modulation current variation versus the applied voltage at MODSET pin.

Bias

The bias is set by applying a voltage within the range 0V to 1.2V to pin 16 (BIASSET). The bias gain curve on page 6 shows bias current variation versus the applied voltage at pin 16.

The SY88022L driver is designed to work with one of the Micrel's MIC300X series of controllers which have built in APC (Automatic Power Control) circuit and a serial interface for programming modulation and bias, temperature compensation tables, setting registers, and monitoring registers read back. Refer to the MIC3001/MIC3002/MIC3003 datasheets for more details. The applications section below shows how to set up the driver to work correctly with the MIC300X controller.

Application Information

Figure 3, below, illustrates a typical optical transceiver using the SY88022L and one of the Micrel's FOM management IC MIC300X.

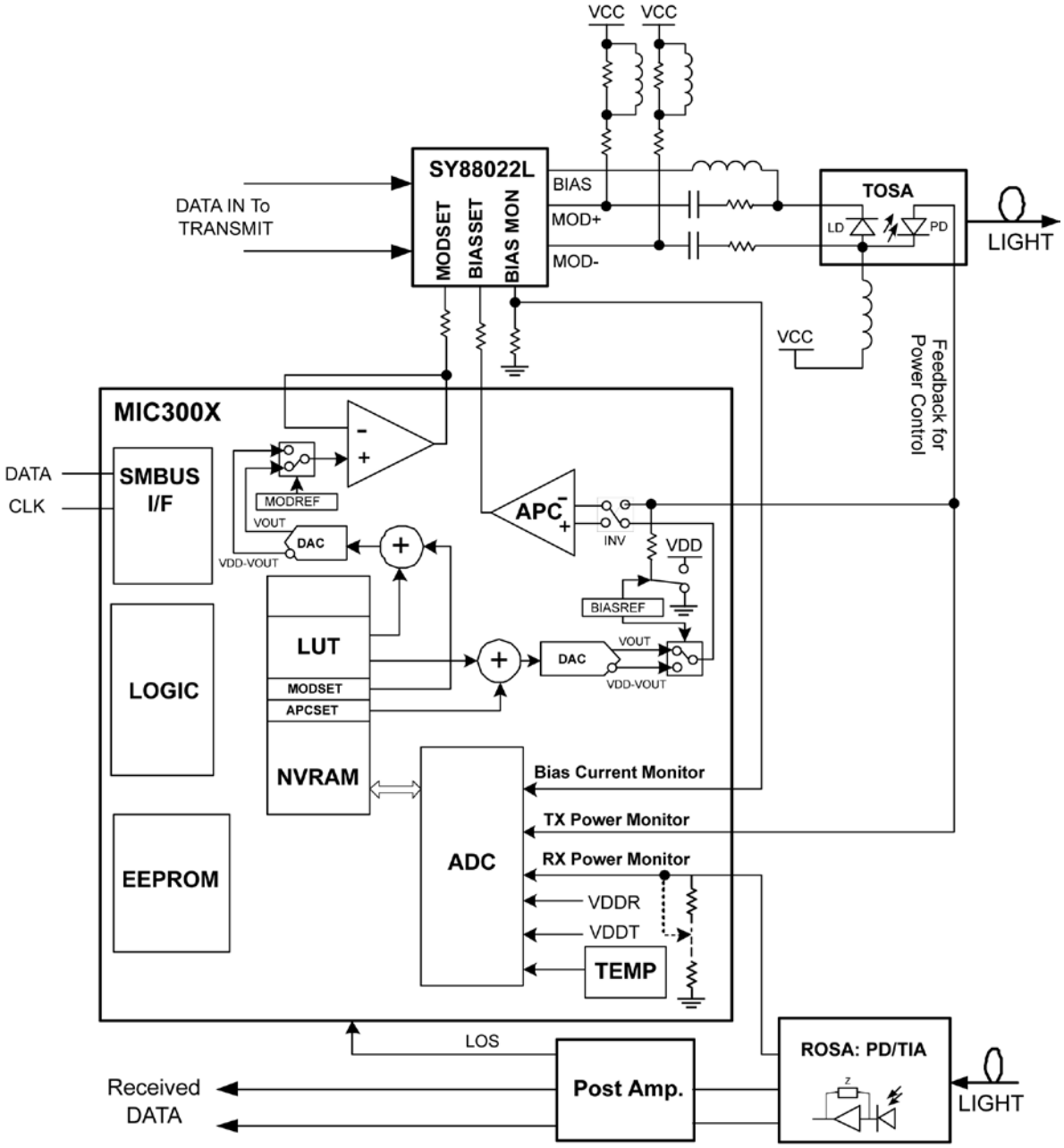

Figure 3. Typical Optical Transceiver

Package Information

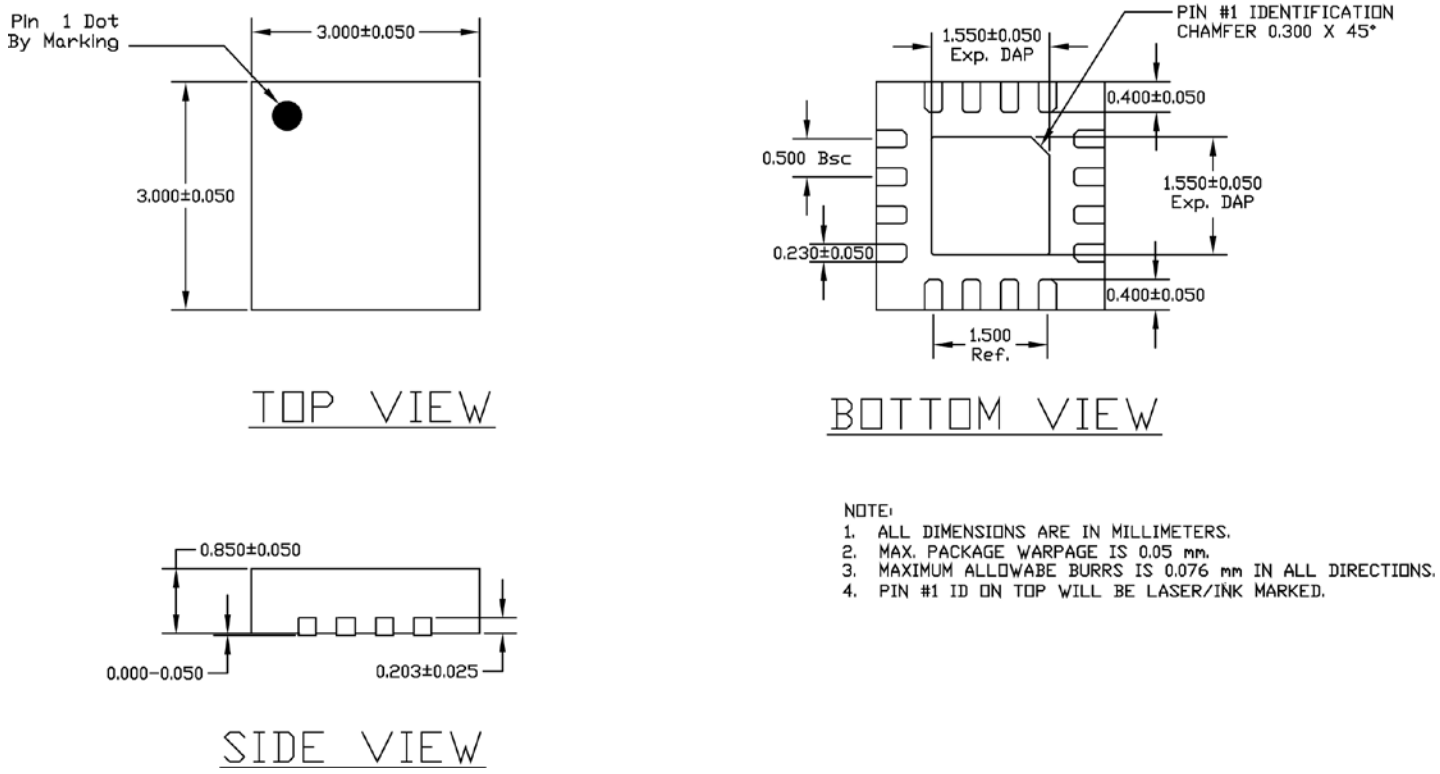

16-Pin (3mm x 3mm) QFN

MICREL, INC. 2180 FORTUNE DRIVE SAN JOSE, CA 95131 USA
TEL +1 (408) 944-0800 FAX +1 (408) 474-1000 WEB http://www.micrel.com

The information furnished by Micrel in
this data sheet is believed to be accurate and reliable. However, no responsibility is assumed by Micrel for its use. Micrel reserves the right to change circuitry and specifications at any time without notification to the customer.

Micrel Products are not designed or authorized for use as components in life support appliances, devices or systems where malfunction of a product can reasonably be expected to result in personal injury. Life support devices or systems are devices or systems that (a) are intended for surgical implant into the body or (b) support or sustain life, and whose failure to perform can be reasonably expected to result in a significant injury to the user. A Purchaser's use or sale of Micrel Products for use in life support appliances, devices or systems is a Purchaser's own risk and Purchaser agrees to fully indemnify Micrel for any damages resulting from such use or sale.

© 2009 Micrel, Incorporated.

Mouser Electronics

Authorized Distributor

Click to View Pricing, Inventory, Delivery & Lifecycle Information:

Micrel:

SY88022LMG SY88022ALMG TR SY88022ALMG SY88022LMG TR

Мы молодая и активно развивающаяся компания в области поставок электронных компонентов. Мы поставляем электронные компоненты отечественного и импортного производства напрямую от производителей и с крупнейших складов мира.

Благодаря сотрудничеству с мировыми поставщиками мы осуществляем комплексные и плановые поставки широчайшего спектра электронных компонентов.

Собственная эффективная логистика и склад в обеспечивает надежную поставку продукции в точно указанные сроки по всей России.

Мы осуществляем техническую поддержку нашим клиентам и предпродажную проверку качества продукции. На все поставляемые продукты мы предоставляем гарантию .

Осуществляем поставки продукции под контролем ВП МО РФ на предприятия военно-промышленного комплекса России , а также работаем в рамках 275 ФЗ с открытием отдельных счетов в уполномоченном банке. Система менеджмента качества компании соответствует требованиям ГОСТ ISO 9001.

Минимальные сроки поставки, гибкие цены, неограниченный ассортимент и индивидуальный подход к клиентам являются основой для выстраивания долгосрочного и эффективного сотрудничества с предприятиями радиоэлектронной промышленности, предприятиями ВПК и научно-исследовательскими институтами России.

С нами вы становитесь еще успешнее!

Наши контакты:

Телефон: +7 812 627 14 35

Электронная почта: sales@st-electron.ru

Адрес: 198099, Санкт-Петербург, Промышленная ул, дом № 19, литера Н, помещение 100-Н Офис 331