MAX4638/MAX4639

3.5Ω, Single 8:1 and Dual 4:1, Low-Voltage Analog Multiplexers

General Description

The MAX4638/MAX4639 are single 8:1 and dual 4:1 CMOS analog multiplexers/demultiplexers (muxes/demuxes). Each mux operates from a single +1.8V to +5V supply or dual ±2.5V supplies. These devices feature 3.5Ω on-resistance (R_{ON}) when powered with a single +5V supply and have -75dB off-isolation and -85dB crosstalk from the output to each off channel. The switching times are 18ns t_{ON} and 7ns t_{OFF}. They feature a -3dB 85MHz bandwidth and a guaranteed 0.25nA leakage current at +25°C.

A +1.8V to +5.5V operating range makes the MAX4638/MAX4639 ideal for battery-powered, portable instruments. All channels guarantee break-before-make switching. These parts feature bidirectional operation and can handle Rail-to-Rail® analog signals. All control inputs are TTL/CMOS-logic compatible. Decoding is in standard BCD format, and an enable input is provided to simplify cascading of devices. These devices are available in small 16-pin TQFN, TSSOP, and SO packages, as well as a 20-pin TQFN package.

Applications

Automatic Test Equipment

Low-Voltage Data-Acquisition Systems

Audio and Video Signal Routing

Medical Equipment

Battery-Powered Equipment

Relay Replacement

Features

- **Guaranteed R_{ON}**
  3.5Ω (+5V or ±2.5V Supplies)
  6Ω (+3V Supply)
- **Guaranteed 0.4Ω R_{ON} Match Between Channels**
- **Guaranteed 1Ω R_{ON} Flatness Over Signal Range**
- **Guaranteed Low Leakage Currents**
  0.25nA at +25°C
- **Switching Times: t_{ON} = 18ns, t_{OFF} = 7ns**
- **+1.8V to +5.5V Single-Supply Operation**
  ±2.5V Dual-Supply Operation
- **Rail-to-Rail Signal Handling**
- **TTL/CMOS-Logic Compatible**
- **Crosstalk: -80dB (1MHz)**
- **Off-Isolation: -60dB (10MHz)**

Ordering Information

PART	TEMP RANGE	PIN-PACKAGE
MAX4638ETE+T	-40°C to +85°C	16 TQFN-EP* (4 × 4)
MAX4638EUE+T	-40°C to +85°C	16 TSSOP
MAX4638ESE+T	-40°C to +85°C	16 SO
MAX4638ETP+T	-40°C to +85°C	20 TQFN-EP* (4 × 4)

+Denotes a lead(Pb)-free/RoHS-compliant package.

T = Tape and reel.

**EP = Exposed pad.*

Ordering Information continued at end of data sheet.

Pin Configurations/Functional Diagrams

TOP VIEW

MAX4638

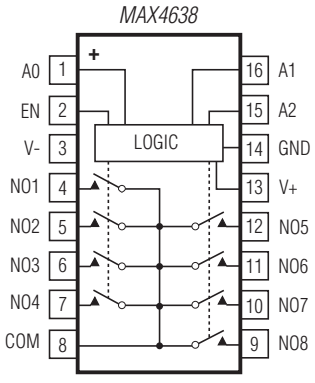

TSSOP/SO

MAX4639

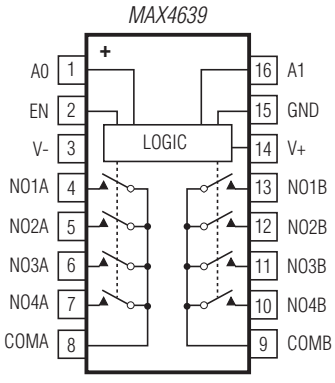

TSSOP/SO

Rail-to-Rail is a registered trademark of Nippon Motorola, Ltd.

For pricing, delivery, and ordering information, please contact Maxim Direct at 1-888-629-4642, or visit Maxim Integrated's website at www.maximintegrated.com.

19-1782; Rev 3; 10/12

ABSOLUTE MAXIMUM RATINGS

(Voltages Referenced to GND)
V+ to V- .....+6V
V+, A_, EN .....-0.3V to +6V
V- .....+0.3V to -6V
NO_, COM_ (Note 1) ..... -0.3V to (V+ + 0.3V)
Continuous Current A_, EN ..... ±30mA
Continuous Current NO_, COM_ ..... ±100mA
Peak Current (NO_, COM_)
(pulsed at 1ms, 10% duty cycle) ..... ±200mA

Continuous Power Dissipation (T_A = +70°C)
TQFN (derate 16.9mW/°C above +70°C).....1349mW
TSSOP (derate 9.4mW/°C above +70°C) 754.7mW
SO (derate 8.70mW/°C above +70°C) 696mW
Operating Temperature Range
MAX463_E_ E .....-40°C to +85°C
Junction Temperature.....+150°C
Storage Temperature Range .....-65°C to +150°C
Lead Temperature (soldering, 10s) .....+300°C
Soldering Temperature (reflow) .....+260°C

Note 1: Signals on COM_, NO_ exceeding V+ or V- are clamped by internal diodes. A_ and EN are clamped only to V- and can exceed V+ up to their maximum ratings. Limit forward-diode current to maximum current rating.

Stresses beyond those listed under "Absolute Maximum Ratings" may cause permanent damage to the device. These are stress ratings only, and functional operation of the device at these or any other conditions beyond those indicated in the operational sections of the specifications is not implied. Exposure to absolute maximum rating conditions for extended periods may affect device reliability.

ELECTRICAL CHARACTERISTICS—+5V Single Supply

(V+ = +5V ±10%, V- = 0, V_{IH} = +2.4V, V_{IL} = +0.8V, T_A = T_{MIN} to T_{MAX}, unless otherwise noted. Typical values are at T_A = +25°C.) (Notes 2, 3)

PARAMETER	SYMBOL	CONDITIONS		MIN	TYP (Note 2)	MAX	UNITS
ANALOG SWITCH							
Analog Signal Range	$V_{COM_}$, $V_{NO_}$			0		V+	V
On-Resistance	R_{ON}	V+ = +4.5V, $I_{COM_}$ = 10mA, $V_{NO_}$ = +3.5V	T_A = +25°C		2.5	3.5	Ω
			T_A = T_{MIN} to T_{MAX}			4.5	
On-Resistance Match Between Channels (Notes 4, 5)	ΔR_{ON}	V+ = +4.5V, $I_{COM_}$ = 10mA, $V_{NO_}$ = +3.5V	T_A = +25°C		0.1	0.4	Ω
			T_A = T_{MIN} to T_{MAX}			0.5	
On-Resistance Flatness (Note 6)	$R_{FLAT(ON)}$	V+ = +4.5V; $I_{COM_}$ = 10mA; $V_{NO_}$ = +1V, +2V, +3.5V	T_A = +25°C		0.75	1	Ω
			T_A = T_{MIN} to T_{MAX}			1.2	
NO_ Off-Leakage Current (Note 7)	$I_{NO_(OFF)}$	V+ = +5.5V; $V_{COM_}$ = +1V, +4.5V; $V_{NO_}$ = +4.5V, +1V	T_A = +25°C	-0.25	±0.01	0.25	nA
			T_A = T_{MIN} to T_{MAX}	-0.35		0.35	
COM_ Off-Leakage Current (Note 7)	$I_{COM_(OFF)}$	V+ = +5.5V; $V_{COM_}$ = +1V, +4.5V; $V_{NO_}$ = +4.5V, +1V	T_A = +25°C	-0.25	±0.01	0.25	nA
			T_A = T_{MIN} to T_{MAX}	-0.75		0.75	
COM_ On-Leakage Current (Note 7)	$I_{COM_(ON)}$	V+ = +5.5V; $V_{COM_}$ = +1V, +4.5V; $V_{NO_}$ = +1V, +4.5V, or unconnected	T_A = +25°C	-0.25	±0.01	0.25	nA
			T_A = T_{MIN} to T_{MAX}	-0.75		0.75	
DIGITAL I/O							
Input Logic High	V_{IH}			2.4			V
Input Logic Low	V_{IL}					0.8	V
Input Leakage Current	I_{IH}, I_{IL}	$V_{IN_}$ = 0 or V+		-0.1	0.005	0.1	µA
Digital Input Capacitance	C_{IN}				2		pF
DYNAMIC							
Transition Time (Note 7)	t_{TRANS}	R_L = 100Ω, C_L = 35pF, V_{NO1} = +3V or 0, V_{NO8} = 0 or +3V, Figure 2	T_A = +25°C		14	18	ns
			T_A = T_{MIN} to T_{MAX}			20	

ELECTRICAL CHARACTERISTICS—+5V Single Supply (continued)

(V+ = +5V ±10%, V- = 0, V_{IH} = +2.4V, V_{IL} = +0.8V, T_A = T_{MIN} to T_{MAX}, unless otherwise noted. Typical values are at T_A = +25°C.) (Notes 2, 3)

PARAMETER	SYMBOL	CONDITIONS			MIN	TYP (Note 2)	MAX	UNITS
Break-Before-Make (Note 7)	t_{BBM}	R_L = 100Ω, C_L = 35pF, $V_{NO_}$ = +3V, Figure 3		T_A = +25°C		8		ns
				T_A = T_{MIN} to T_{MAX}	1			
Enable Turn-On Time (Note 7)	$t_{ON(EN)}$	R_L = 100Ω, C_L = 35pF, V_{NO1} = +3V, V_{NO2} to V_{NO8} = 0, Figure 4		T_A = +25°C		14	18	ns
				T_A = T_{MIN} to T_{MAX}			20	
Enable Turn-Off Time (Note 7)	$t_{OFF(EN)}$	R_L = 100Ω, C_L = 35pF, V_{NO1} = +3V, V_{NO2} to V_{NO8} = 0, Figure 4		T_A = +25°C		5	7	ns
				T_A = T_{MIN} to T_{MAX}			8	
On-Channel -3dB Bandwidth	BW	Signal = 0dBm, C_L = 5pF, 50Ω in and out, Figure 6	MAX4638	T_A = +25°C		50		MHz
			MAX4639	T_A = +25°C		85		
Charge Injection	Q	V_{GEN} = +2.5V, R_{GEN} = 0, C_L = 1.0nF, Figure 5		T_A = +25°C		13		pC
NO_ Off-Capacitance	$C_{NO_(OFF)}$	$V_{NO_}$ = 0V, f = 1MHz, Figure 8		T_A = +25°C		9		pF
COM_ Off-Capacitance	$C_{COM_(OFF)}$	$V_{COM_}$ = 0V, f = 1MHz, Figure 8	MAX4638	T_A = +25°C		40		pF
			MAX4639	T_A = +25°C		20		
Switch On-Capacitance	$C_{(ON)}$	$V_{COM_}$ = $V_{NO_}$ = 0V, f = 1MHz, Figure 8	MAX4638	T_A = +25°C		54		pF
			MAX4639	T_A = +25°C		34		
Off-Isolation (Note 8)	V_{ISO}	C_L = 5pF, R_L = 50Ω, f = 1MHz, $V_{NO_}$ = $1V_{RMS}$, Figure 6		T_A = +25°C		-55		dB
		C_L = 5pF, R_L = 50Ω, f = 10MHz, $V_{NO_}$ = $1V_{RMS}$, Figure 6		T_A = +25°C		-75		
Crosstalk (Note 9)	V_{CT}	C_L = 5pF, R_L = 50Ω, f = 10MHz, $V_{NO_}$= $1V_{RMS}$, Figure 7		T_A = +25°C		-65		dB
		C_L = 5pF, R_L = 50Ω, f = 1MHz, $V_{NO_}$ = $1V_{RMS}$, Figure 7		T_A = +25°C		-85		
Total Harmonic Distortion	THD	R_L = 600Ω, $R_{FLAT(ON)}/R_L$		T_A = +25°C		0.5		%
SUPPLY								
Positive Supply Current	I+	V+ = +5.5V, V_{IN} = 0 or V+				0.001	1.0	µA

ELECTRICAL CHARACTERISTICS—+3.0V Single Supply

(V+ = +2.7V to +3.3V, V- = 0, V_{IH} = +2.0V, V_{IL} = +0.4V, T_A = T_{MIN} to T_{MAX}, unless otherwise noted. Typical values are at V+ = +3V and T_A = +25°C.) (Notes 2, 3)

PARAMETER	SYMBOL	CONDITIONS		MIN	TYP (Note 2)	MAX	UNITS
ANALOG SWITCH							
Analog Signal Range	$V_{COM_}$, $V_{NO_}$			0		V+	V
On-Resistance	R_{ON}	$I_{COM_}$ = 10mA, $V_{NO_}$ = +1.7V	T_A = +25°C		4.5	6	Ω
			T_A = T_{MIN} to T_{MAX}			8	
On-Resistance Match Between Channels (Notes 4, 5)	ΔR_{ON}	$I_{COM_}$ = 10mA, $V_{NO_}$ = +1.7V	T_A = +25°C		0.25	0.6	Ω
			T_A = T_{MIN} to T_{MAX}			0.8	
On-Resistance Flatness (Note 6)	$R_{FLAT(ON)}$	$I_{COM_}$ = 10mA; $V_{NO_}$ = +1.5V, +1.7V, +1.9V	T_A = +25°C		1	2	Ω
			T_A = T_{MIN} to T_{MAX}			2.5	
NO_ Off-Leakage Current (Note 7)	$I_{NO_(OFF)}$	V+ = +3.3V; $V_{COM_}$ = +1V, +3V; $V_{NO_}$ = +3V, +1V	T_A = +25°C	-0.25	±0.01	0.25	nA
			T_A = T_{MIN} to T_{MAX}	-0.35		0.35	
COM_ Off-Leakage Current (Note 7)	$I_{COM_(OFF)}$	V+ = +3.3V; $V_{COM_}$ = +1V, +3V; $V_{NO_}$ = +3V, +1V	T_A = +25°C	-0.25	±0.01	0.25	nA
			T_A = T_{MIN} to T_{MAX}	-0.35		0.35	
COM_ On-Leakage Current (Note 7)	$I_{COM_(ON)}$	V+ = +3.3V; $V_{COM_}$ = +1V, +3V; $V_{NO_}$ = +1V, +3V, or unconnected	T_A = +25°C	-0.25	±0.01	0.25	nA
			T_A = T_{MIN} to T_{MAX}	-0.35		0.35	
DIGITAL I/O							
Input Logic High	V_{IH}			2.0			V
Input Logic Low	V_{IL}					0.4	V
Input Leakage Current	I_{IH}, I_{IL}	$V_{IN_}$ = 0 or V+		-0.1	0.005	0.1	µA
Digital Input Capacitance	C_{IN}				2		pF
DYNAMIC							
Transition Time (Note 7)	t_{TRANS}	$V_{NO_}$ = +2V, C_L = 35pF, R_L = 100Ω, Figure 2	T_A = +25°C		16	20	ns
			T_A = T_{MIN} to T_{MAX}			24	
Break-Before-Make (Note 7)	t_{BBM}	$V_{NO_}$ = +2V, C_L = 35pF, R_L = 100Ω, Figure 3	T_A = +25°C		8		ns
			T_A = T_{MIN} to T_{MAX}	1			
Enable Turn-On Time (Note 7)	$t_{ON(EN)}$	$V_{NO_}$ = +2V, C_L = 35pF, R_L = 100Ω, Figure 4	T_A = +25°C		15	20	ns
			T_A = T_{MIN} to T_{MAX}			24	
Enable Turn-Off Time (Note 7)	$t_{OFF(EN)}$	$V_{NO_}$ = +2V, C_L = 35pF, R_L = 100Ω, Figure 4	T_A = +25°C		5	9	ns
			T_A = T_{MIN} to T_{MAX}			10	

ELECTRICAL CHARACTERISTICS—+3.0V Single Supply (continued)

(V+ = +2.7V to +3.3V, V- = 0, V_{IH} = +2.0V, V_{IL} = +0.4V, T_A = T_{MIN} to T_{MAX}, unless otherwise noted. Typical values are at V+ = +3V and T_A = +25°C.) (Notes 2, 3)

PARAMETER	SYMBOL	CONDITIONS			MIN	TYP (Note 2)	MAX	UNITS
Off-Isolation (Note 8)	V_{ISO}	C_L = 5pF, R_L = 50Ω, f = 10MHz, $V_{NO_}$ = +1V_{RMS}, Figure 6		T_A = +25°C		55		dB
		C_L = 5pF, R_L = 50Ω, f = 1MHz, $V_{NO_}$ = 1V_{RMS}, Figure 6		T_A = +25°C		-75		
Crosstalk (Note 9)	V_{CT}	C_L = 5pF, R_L = 50Ω, f = 10MHz, $V_{NO_}$ = 1V_{RMS}, Figure 7		T_A = +25°C		-65		dB
		C_L = 5pF, R_L = 50Ω, f = 1MHz, $V_{NO_}$ = 1V_{RMS}, Figure 7		T_A = +25°C		-85		
On-Channel -3dB Bandwidth	BW	Signal = 0dBm, 50Ω in and out, Figure 6	MAX4638	T_A = +25°C		50		MHz
			MAX4639	T_A = +25°C		85		
NO_ Off-Capacitance	$C_{NO_(OFF)}$	$V_{NO_}$ = 0V, f = 1MHz, Figure 8		T_A = +25°C		9		pF
COM_ Off-Capacitance	$C_{COM_(OFF)}$	$V_{COM_}$ = 0V, f = 1MHz, Figure 8	MAX4638	T_A = +25°C		40		pF
			MAX4639	T_A = +25°C		20		
Switch On-Capacitance	$C_{(ON)}$	V_{COM} = $V_{NO_}$ = 0V, f = 1MHz, Figure 8	MAX4638	T_A = +25°C		54		pF
			MAX4639	T_A = +25°C		34		
SUPPLY								
Positive Supply Current	I+	V+ = +3.3V, $V_{IN_}$ = 0 or V+				0.001	1	µA

ELECTRICAL CHARACTERISTICS—±2.5V Dual Supplies

(V+ = +2.5 ±10%, V- = -2.5V ±10%, V_{IH} = +2.0V, V_{IL} = +0.4V, T_A =T_{MIN} to T_{MAX}, unless otherwise noted. Typical values are at V± = ±2.5V and T_A = +25°C.) (Notes 2, 3)

PARAMETER	SYMBOL	CONDITIONS		MIN	TYP (Note 2)	MAX	UNITS
ANALOG SWITCH							
Analog Signal Range	$V_{COM_}$, $V_{NO_}$			V-		V+	V
On-Resistance	R_{ON}	$I_{COM_}$ = 10mA, $V_{NO_}$ = ±1.5V, V+ = +2.25V, V- = -2.25V	T_A = +25°C		2.5	3.5	Ω
			T_A = T_{MIN} to T_{MAX}			4.5	
On-Resistance Match Between Channels (Notes 4, 5)	ΔR_{ON}	$I_{COM_}$ = 10mA, $V_{NO_}$ = ±1.5V, V+ = +2.25V, V- = -2.25V	T_A = +25°C		0.2	0.4	Ω
			T_A = T_{MIN} to T_{MAX}			0.5	

ELECTRICAL CHARACTERISTICS—±2.5V Dual Supplies (continued)

(V+ = +2.5 ±10%, V- = -2.5V ±10%, V_{IH} = +2.0V, V_{IL} = +0.4V, T_A = T_{MIN} to T_{MAX}, unless otherwise noted. Typical values are at V± = ±2.5V and T_A = +25°C.) (Notes 2, 3)

PARAMETER	SYMBOL	CONDITIONS		MIN	TYP (Note 2)	MAX	UNITS
On-Resistance Flatness (Note 6)	$R_{FLAT(ON)}$	$I_{COM_}$ = 10mA; $V_{NO_}$ = ±1.5V, 0; V+ = +2.25V; V- = -2.25V	T_A = +25°C		0.75	1	Ω
			T_A = T_{MIN} to T_{MAX}			1.2	
NO_ Off-Leakage Current (Note 7)	$I_{NO_(OFF)}$	V+ = +2.75V; V- = -2.75V; $V_{COM_}$ = +1V, +2.5V; $V_{NO_}$ = +2.5V, +1V	T_A = +25°C	-0.25	±0.01	0.25	nA
			T_A = T_{MIN} to T_{MAX}	-0.35		0.35	
COM_ Off-Leakage Current (Note 7)	$I_{COM_(OFF)}$	V+ = +2.75V; V- = -2.75; $V_{COM_}$ = +1V, +2.5V; $V_{NO_}$ = +2.5V, +1V	T_A = +25°C	-0.25	±0.01	0.25	nA
			T_A = T_{MIN} to T_{MAX}	-0.35		0.35	
COM_ On-Leakage Current (Note 7)	$I_{COM_(ON)}$	V+ = +2.5V; V- = -2.5; $V_{COM_}$ = +1V, +2.5V; $V_{NO_}$ = +1V, +2.5V, or unconnected	T_A = +25°C	-0.25	±0.01	0.25	nA
			T_A = T_{MIN} to T_{MAX}	-0.35		0.35	
DIGITAL I/O							
Input Logic High	V_{IH}			2.0			V
Input Logic Low	V_{IL}					0.4	V
Input Leakage Current	I_{IH}, I_{IL}	$V_{IN_}$ = 0 or V+		-0.1	0.005	0.1	µA
Digital Input Capacitance	C_{IN}				2		pF
DYNAMIC							
Transition Time (Note 7)	t_{TRANS}	$V_{NO_}$ = +1.2V, C_L = 35pF, R_L = 100Ω, Figure 2	T_A = +25°C		16	20	ns
			T_A = T_{MIN} to T_{MAX}			24	
Enable Turn-On Time (Note 7)	$t_{ON(EN)}$	$V_{NO_}$ = +1.2V, C_L = 35pF, R_L = 100Ω, Figure 4	T_A = +25°C		14	18	ns
			T_A = T_{MIN} to T_{MAX}			20	
Enable Turn-Off Time (Note 7)	$t_{OFF(EN)}$	$V_{NO_}$ = +1.2V, C_L = 35pF, R_L = 100Ω, Figure 4	T_A = +25°C		5	7	ns
			T_A = T_{MIN} to T_{MAX}			8	
Break-Before-Make (Note 7)	t_{BBM}	$V_{NO_}$ = +1.2V, C_L = 35pF, R_L = 100Ω, Figure 3	T_A = +25°C		8		ns
			T_A = T_{MIN} to T_{MAX}	1			

Note 2: The algebraic convention, where the most negative value is a minimum and the most positive value a maximum, is used in this data sheet.
Note 3: Parts are tested at +85°C and guaranteed by design over the entire temperature range.
Note 4: $\Delta R_{ON} = R_{ON(MAX)} - R_{ON(MIN)}$.
Note 5: ΔR_{ON} matching specifications for TQFN packaged parts are guaranteed by design.
Note 6: Flatness is defined as the difference between the maximum and minimum value of on-resistance as measured over the specified analog signal ranges.
Note 7: Guaranteed by design.
Note 8: Off-Isolation = $20\log_{10}$ ($V_{COM_}$ / $V_{NO_}$), $V_{COM_}$ = output, $V_{NO_}$ = input to off switch.
Note 9: Between any two switches.

Typical Operating Characteristics

(V+ = +5V, V- = 0V, T_A = +25°C, unless otherwise noted.)

ON-RESISTANCE vs. V_{COM}

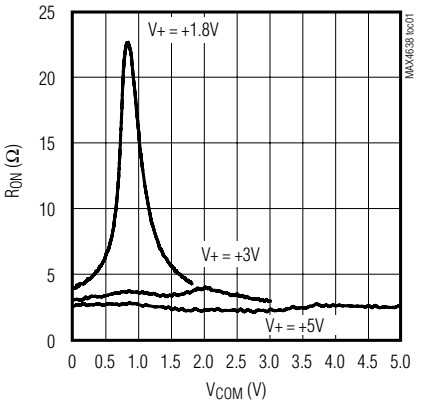

ON-RESISTANCE vs. V_{COM} AND TEMPERATURE

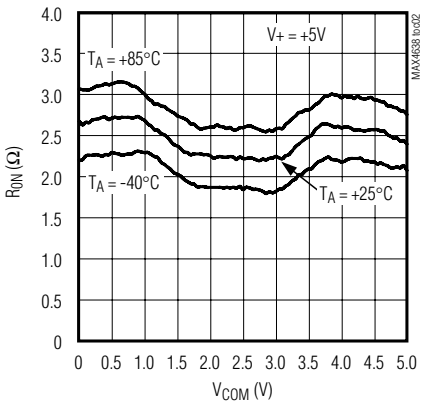

ON-RESISTANCE vs. V_{COM} AND TEMPERATURE

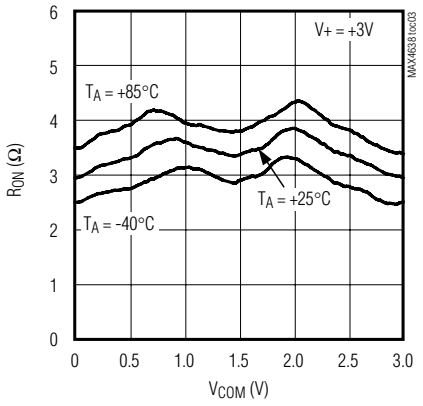

SUPPLY CURRENT vs. SUPPLY VOLTAGE

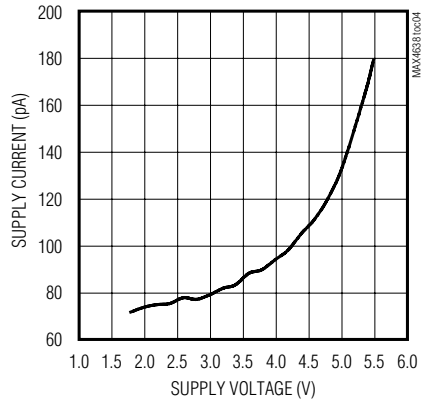

CHARGE INJECTION vs. V_{COM}

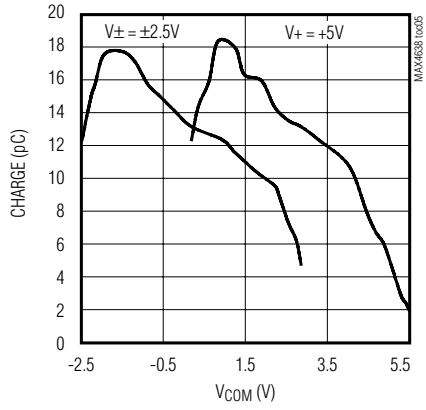

SUPPLY CURRENT vs. TEMPERATURE

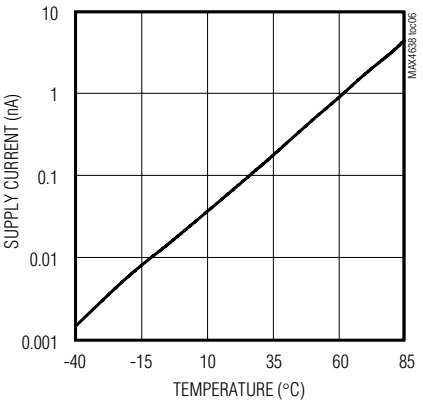

LOGIC LEVEL THRESHOLD vs. SUPPLY VOLTAGE AND TEMPERATURE

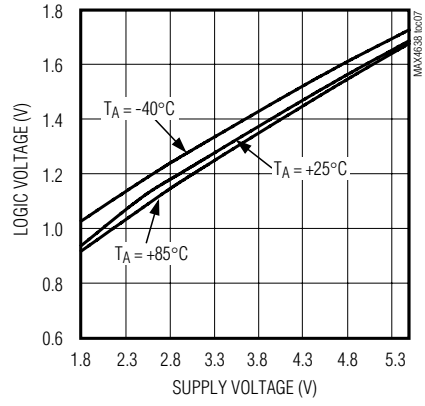

ENABLE TURN-ON/TURN-OFF TIME vs. SUPPLY VOLTAGE

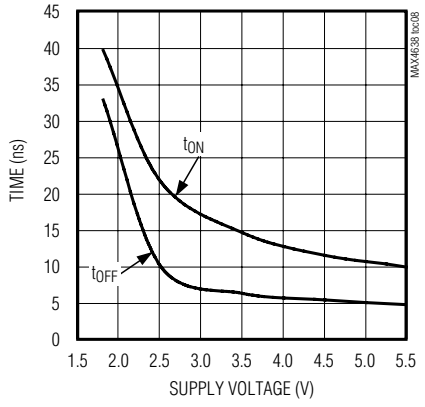

ENABLE TURN-ON/TURN-OFF TIME vs. TEMPERATURE

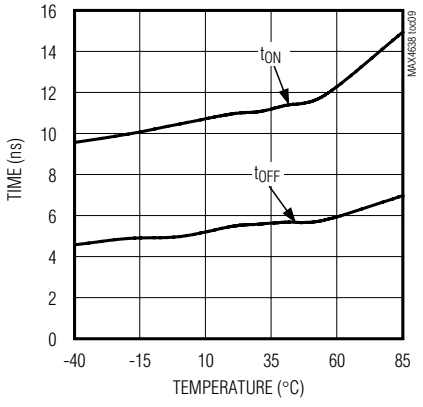

Typical Operating Characteristics (continued)

(V+ = +5V, V- = 0V, T_A = +25°C, unless otherwise noted.)

FREQUENCY RESPONSE

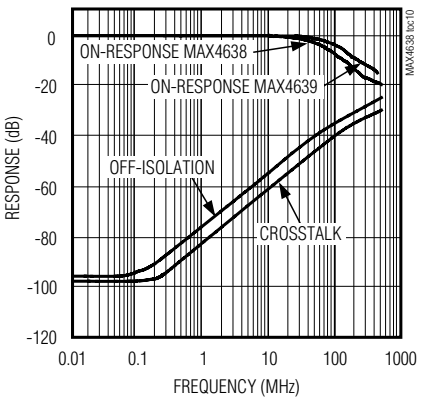

ON/OFF-LEAKAGE CURRENT vs. TEMPERATURE

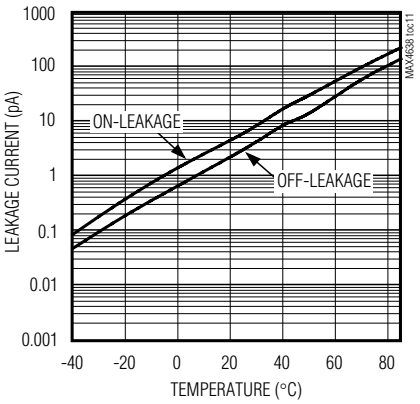

TOTAL HARMONIC DISTORTION vs. FREQUENCY

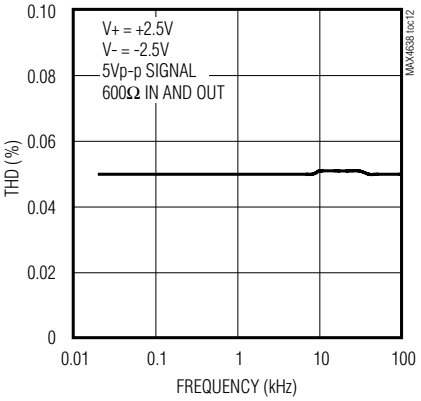

Pin Description

PIN						NAME	FUNCTION
MAX4638			MAX4639				
DIP/SO	TQFN-EP		DIP/SO	TQFN-EP			
	16-PIN	20-PIN		16-PIN	20-PIN		
1, 15, 16	15, 13, 14	19, 18, 17	—	—	—	A0, A2, A1	Address Inputs
—	—	—	1, 16	15, 14	19, 17	A0, A1	Address Inputs
2	16	1	2	16	1	EN	Enable
3	1	2	3	1	2	V-	Negative-Supply Voltage Input
4–7	2–5	3–6	—	—	—	NO1–N04	Bidirectional Analog Inputs
—	—	—	4–7	2–5	3–6	NO1A–NO4A	Bidirectional Analog Inputs
8	6	7	—	—	—	COM	Bidirectional Analog outputs
—	—	—	8, 9	6, 7	7, 9	COMA, COMB	Bidirectional Analog outputs
9–12	7–10	10–13	—	—	—	NO8–NO5	Bidirectional Analog Inputs
—	—	—	10–13	8–11	10–13	NO4B–NO1B	Bidirectional Analog Inputs
13	11	14	14	12	14	V+	Positive-Supply Voltage Input
14	12	15	15	13	15	GND	Ground
—	—	8, 9, 16, 20	—	—	8, 16, 18, 20	N.C.	No Connection. Not internally connected.
—	—	—	—	—	—	EP	Exposed Pad (TQFN Only). Connect EP to V-.

Detailed Description

The MAX4638/MAX4639 are low-voltage, CMOS analog muxes. The MAX4638 is an 8:1 mux that switches one of eight inputs (NO1–NO8) to a common output (COM) as determined by the 3-bit binary inputs A0, A1, and A2. The MAX4639 is a 4:1 dual mux that switches one of four differential inputs to a common differential output as determined by the 2-bit binary inputs A0 and A1. Both the MAX4638/MAX4639 have an EN input that can be used to enable or disable the device. When disabled, all channels are switched off. See Truth Tables.

Applications Information

Overvoltage Protection

Proper power-supply sequencing is recommended for all CMOS devices. Do not exceed the absolute maximum ratings because stresses beyond the listed ratings can cause permanent damage to the devices. Always sequence V+ on first, then V-, followed by the logic inputs. If power-supply sequencing is not possible, add two small-signal diodes (D1, D2) in series with the supply pins for overvoltage protection (Figure 1). Adding diodes reduces the analog signal range to one diode drop below V+ and one diode drop above V-, but does not affect the devices' low switch resistance. Device operation is unchanged, and the difference between V+ and V- should not exceed 6V. These protection diodes are not recommended when using a single supply. For single-supply operation, V- should be connected to GND as close to the device as possible.

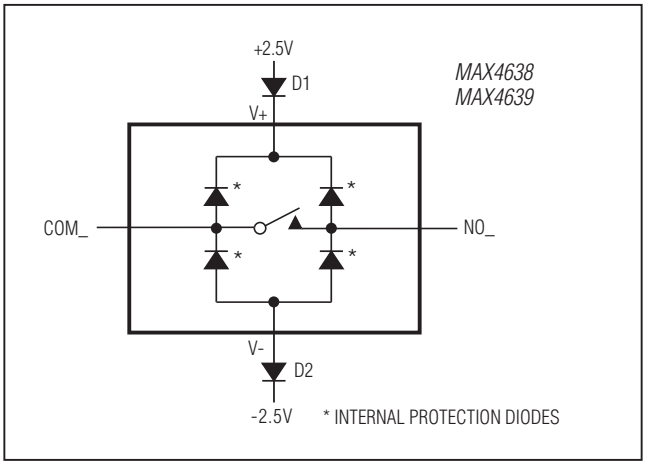

Figure 1. Overvoltage Protection Using External Blocking Diodes

Truth Tables

MAX4638 (Single 8-to-1 Mux)

A2	A1	A0	EN	ON SWITCH
X	X	X	0	None
0	0	0	1	NO1
0	0	1	1	NO2
0	1	0	1	NO3
0	1	1	1	NO4
1	0	0	1	NO5
1	0	1	1	NO6
1	1	0	1	NO7
1	1	1	1	NO8

MAX4639 (Dual 4-to-1 Mux)

A1	A0	EN	COMA	COMB
X	X	0	None	None
0	0	1	NO1A	NO1B
0	1	1	NO2A	NO2B
1	0	1	NO3A	NO3B
1	1	1	NO4A	NO4B

Test Circuits/Timing Diagrams

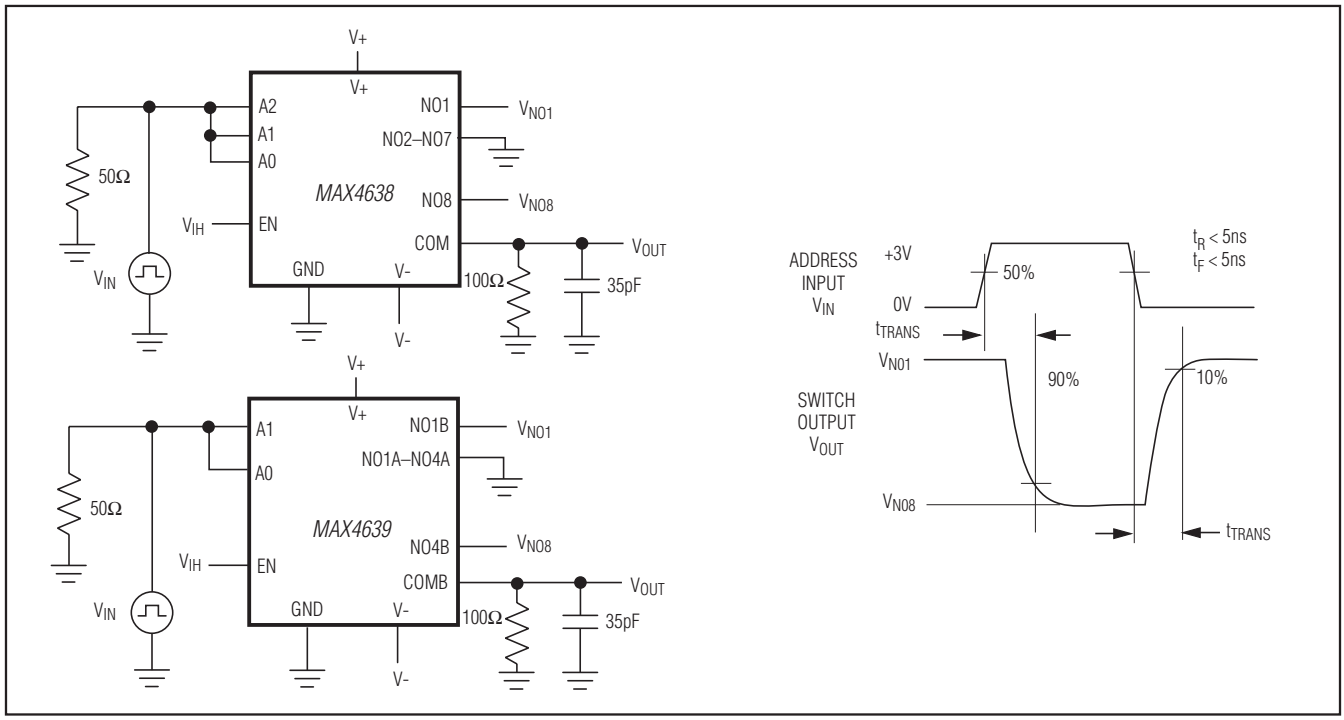

Figure 2. Transition Time

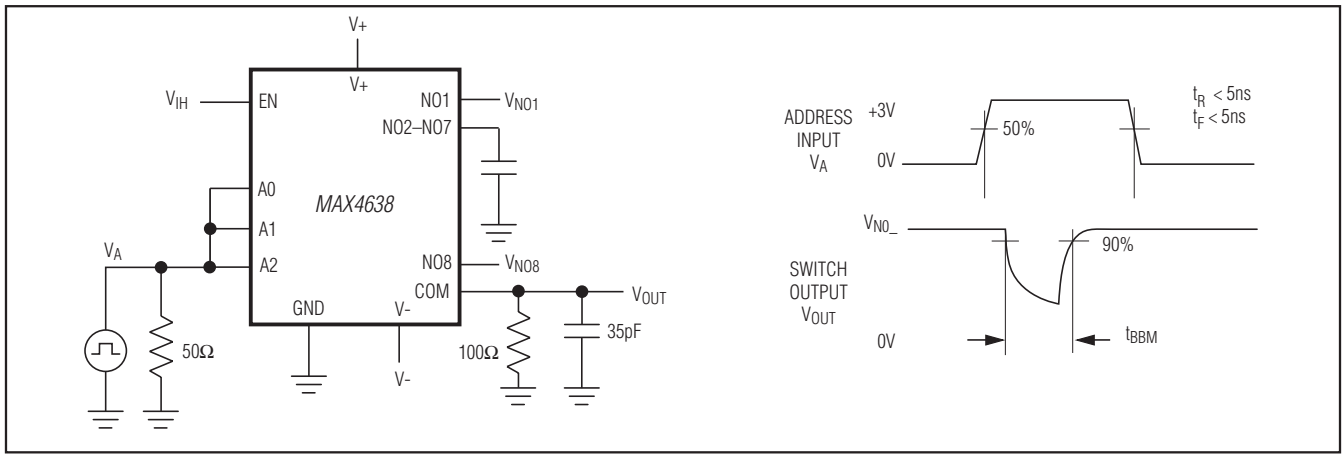

Figure 3. MAX4638 Break-Before-Make Interval

Test Circuits/Timing Diagrams (continued)

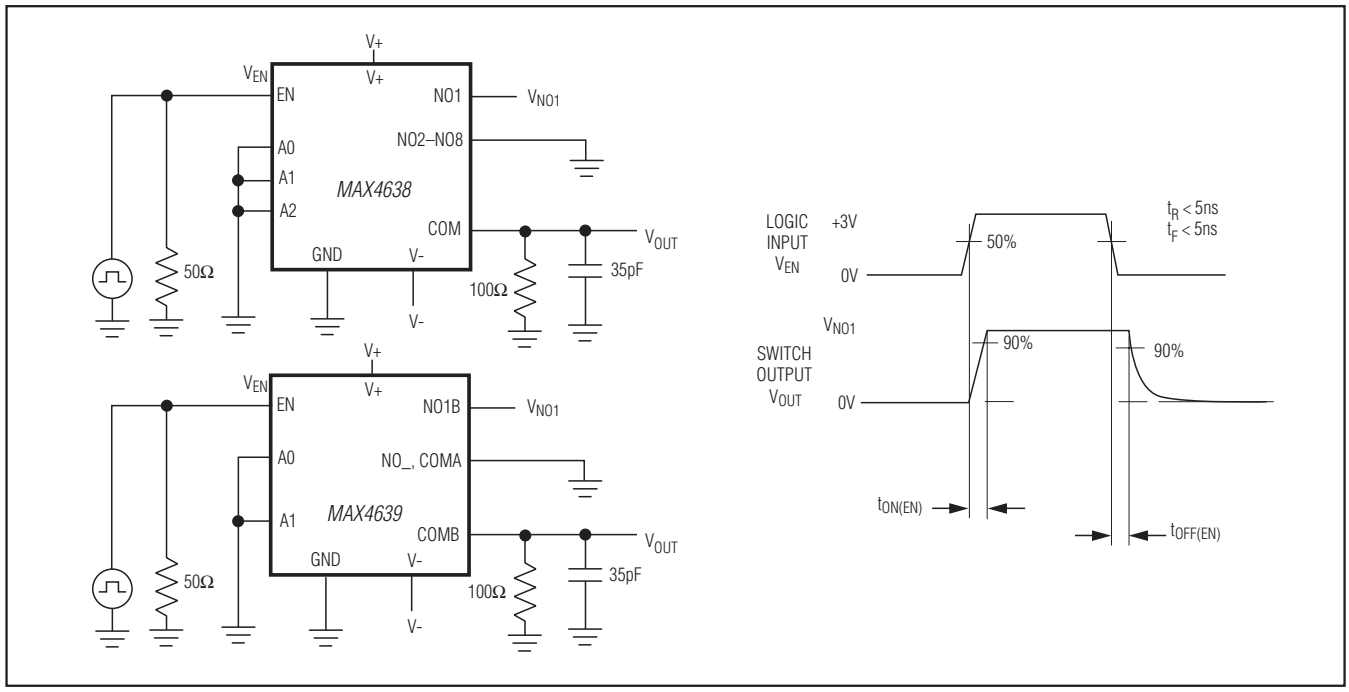

Figure 4. Enable Switching Time

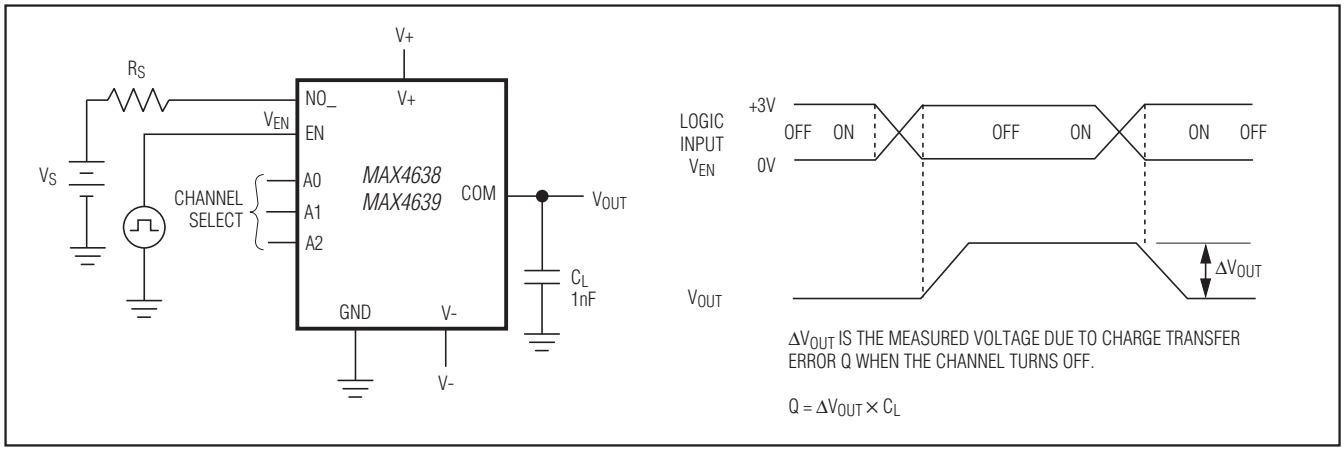

Figure 5. Charge Injection

Test Circuits/Timing Diagrams (continued)

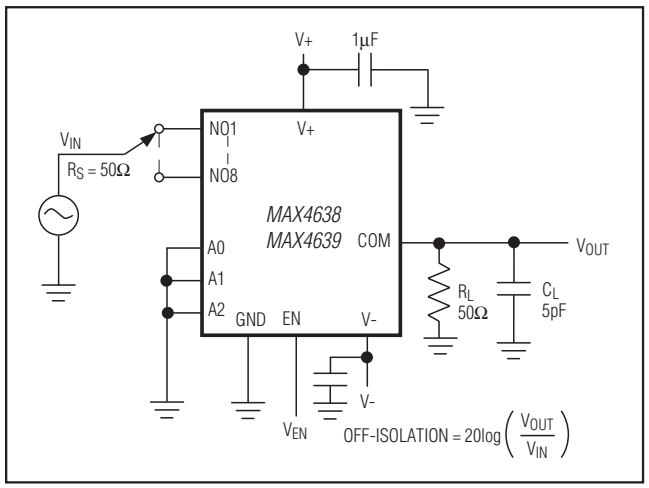

Figure 6. Off-Isolation/On-Channel Bandwidth

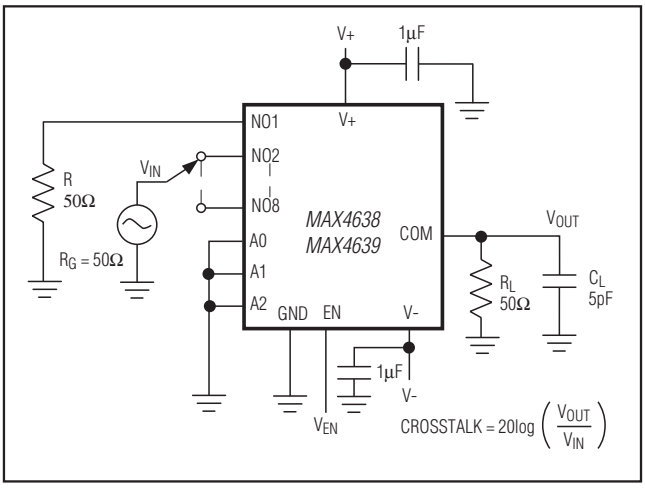

Figure 7. Crosstalk

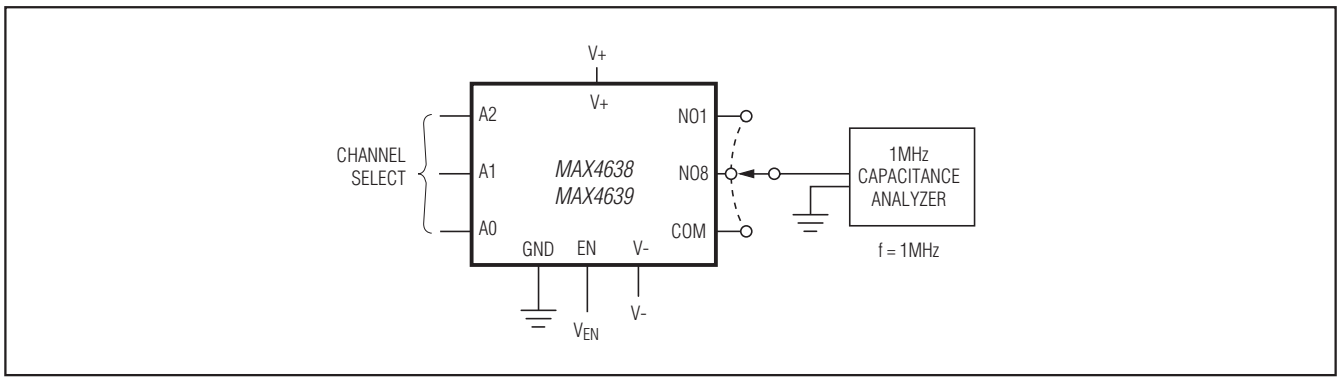

Figure 8. Channel Off/On-Capacitance

Pin Configurations (continued)

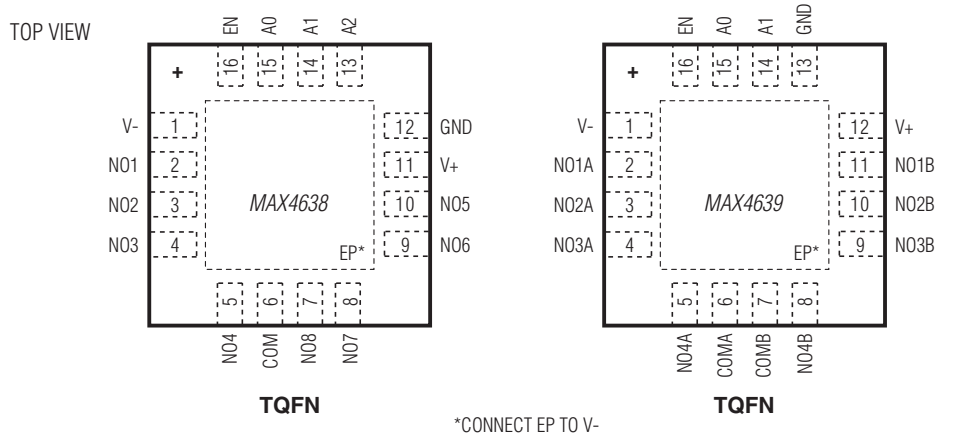

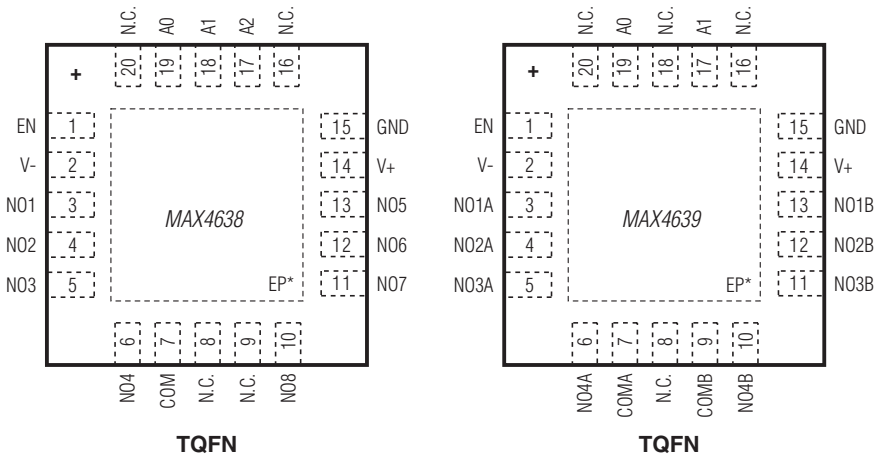

Ordering Information (continued)

PART	TEMP RANGE	PIN-PACKAGE
MAX4639ETE+T	-40°C to +85°C	16 TQFN-EP* (4 × 4)
MAX4639EUE+T	-40°C to +85°C	16 TSSOP
MAX4639ESE+T	-40°C to +85°C	16 SO
MAX4639ETP+T	-40°C to +85°C	20 TQFN-EP* (4 × 4)

+Denotes a lead(Pb)-free/RoHS-compliant package.
T = Tape and reel.
**EP = Exposed pad.*

Chip Information

PROCESS: BiCMOS

Package Information

For the latest package outline information and land patterns (footprints), go to **www.maximintegrated.com/packages**. Note that a "+", "#", or "-" in the package code indicates RoHS status only. Package drawings may show a different suffix character, but the drawing pertains to the package regardless of RoHS status.

PACKAGE TYPE	PACKAGE CODE	OUTLINE NO.	LAND PATTERN NO.
16 TQFN	T1644+4	21-0139	90-0070
20 TQFN	T1644+3	21-0139	90-0069
16 TSSOP	U16+2	21-0066	90-0117
16 SO	S16+3	21-0041	90-0097

Revision History

REVISION NUMBER	REVISION DATE	DESCRIPTION	PAGES CHANGED
2	9/10	—	—
3	10/12	Added RoHS ordering information throughout data sheet	1–16

Maxim Integrated cannot assume responsibility for use of any circuitry other than circuitry entirely embodied in a Maxim Integrated product. No circuit patent licenses are implied. Maxim Integrated reserves the right to change the circuitry and specifications without notice at any time. The parametric values (min and max limits) shown in the Electrical Characteristics table are guaranteed. Other parametric values quoted in this data sheet are provided for guidance.

© 2012 Maxim Integrated Products, Inc. Maxim Integrated and the Maxim Integrated logo are trademarks of Maxim Integrated Products, Inc.

Стандарт Электрон Связь

Мы молодая и активно развивающаяся компания в области поставок электронных компонентов. Мы поставляем электронные компоненты отечественного и импортного производства напрямую от производителей и с крупнейших складов мира.

Благодаря сотрудничеству с мировыми поставщиками мы осуществляем комплексные и плановые поставки широчайшего спектра электронных компонентов.

Собственная эффективная логистика и склад в обеспечивает надежную поставку продукции в точно указанные сроки по всей России.

Мы осуществляем техническую поддержку нашим клиентам и предпродажную проверку качества продукции. На все поставляемые продукты мы предоставляем гарантию .

Осуществляем поставки продукции под контролем ВП МО РФ на предприятия военно-промышленного комплекса России , а также работаем в рамках 275 ФЗ с открытием отдельных счетов в уполномоченном банке. Система менеджмента качества компании соответствует требованиям ГОСТ ISO 9001.

Минимальные сроки поставки, гибкие цены, неограниченный ассортимент и индивидуальный подход к клиентам являются основой для выстраивания долгосрочного и эффективного сотрудничества с предприятиями радиоэлектронной промышленности, предприятиями ВПК и научно-исследовательскими институтами России.

С нами вы становитесь еще успешнее!

Наши контакты:

Телефон: +7 812 627 14 35

Электронная почта: sales@st-electron.ru

Адрес: 198099, Санкт-Петербург,
Промышленная ул, дом № 19, литера Н,
помещение 100-Н Офис 331