1.5/1.9GHz BAND FRONT-END GaAs MMIC

■GENERAL DESCRIPTION

NJG1709KC1 is a front-end GaAs MMIC including a LNA, a local amplifier and a mixer, designed mainly for 1.5 or 1.9GHz band cellular phone.

The ultra small & ultra thin FLP10 package is applied.

■PACKAGE OUTLINE

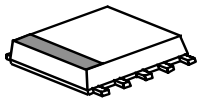

NJG1709KC1

■FEATURES

●Low Voltage Operation	+2.7V typ.
●Low Current Consumption	LNA 3.2mA typ.
	Mixer 5.1mA typ. (with Local Amplifier operation current)
●Ultra Small & Ultra Thin package	FLP10-C1 (Mount Size: 2.8 x 3.0 x 0.75mm)

[LNA]

●High Small Signal Gain	18.0dB typ. @ f_{RF}=1489MHz
	16.0dB typ. @ f_{RF}=1900MHz
●Low Noise Figure	1.2dB typ. @ f_{RF}=1489MHz
	1.3dB typ. @ f_{RF}=1900MHz
●High Output IP3	+13.0dBm typ. @ f_{RF}=1489.0+1489.1MHz
	+13.0dBm typ. @ f_{RF}=1900.0+1900.1MHz

[Mixer]

●High Conversion Gain	12.5dB typ. @ f_{RF}=1489MHz, f_{LO}=1619MHz, P_{LO}=-15dBm
	9.0dB typ. @ f_{RF}=1900MHz, f_{LO}=1660MHz, P_{LO}=-15dBm
●Low Noise Figure	6.0dB typ. @ f_{RF}=1489MHz, f_{LO}=1619MHz, P_{LO}=-15dBm
	6.5dB typ. @ f_{RF}=1900MHz, f_{LO}=1660MHz, P_{LO}=-15dBm
●High Output IP3	+10.0dBm typ. @ f_{RF}=1489.0+1489.1MHz, f_{LO}=1619MHz, P_{LO}=-15dBm
	+11.0dBm typ. @ f_{RF}=1900.0+1900.1MHz, f_{LO}=1660MHz, P_{LO}=-15dBm

■PIN CONFIGURATION

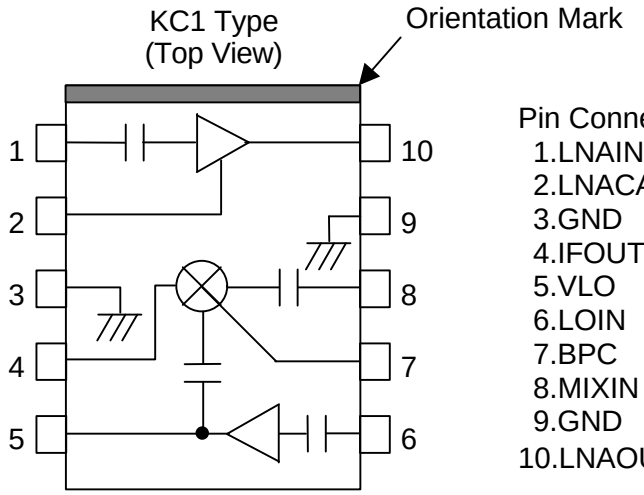

Pin Connection
1.LNAIN
2.LNACAP
3.GND
4.IFOUT
5.VLO
6.LOIN
7.BPC
8.MIXIN
9.GND
10.LNAOUT

NOTE: Please note that any information on this catalog will be subject to change.

■ABSOLUTE MAXIMUM RATINGS

(T_a=+25°C, Z_s=Z_l=50Ω)

PARAMETER	SYMBOL	CONDITIONS	RATINGS	UNITS
LNA Voltage	V_{LNA}		5.0	V
Mixer Voltage	V_{MIX}		5.0	V
Local Amplifier Voltage	V_{LO}		5.0	V
Input Power 1	P_{LNAIN}	V_{LNA}=V_{MIX}=V_{LO}=2.7V	+15	dBm
Input Power 2	P_{LOIN}	V_{LNA}=V_{MIX}=V_{LO}=2.7V	+10	dBm
Power Dissipation	P_D		550	mW
Operating Temperature	T_{opr}		-40~+85	°C
Storage Temperature	T_{stg}		-55~+125	°C

■ELECTRICAL CHARACTERISTICS 1 (LNA)

GENERAL CONDITIONS: T_a=+25°C, V_{LNA}=2.7V, V_{MIX}=V_{LO}=0V, f_{RF}=1489MHz, P_{RF}=-36dBm, Z_s=Z_l=50Ω, with test circuit 1

PARAMETER	SYMBOL	CONDITIONS	MIN	TYP	MAX	UNITS
Operating Frequency	freq		1470	1489	1510	MHz
LNA Voltage	V_{LNA}		2.5	2.7	4.5	V
LNA Operating Current	I_{LNA}	P_{RF}, P_{LO}=OFF	-	3.2	4.1	mA
Small Signal Gain	Gain		16.0	18.0	20.0	dB
Gain Flatness	G_{flat}	f_{RF}=1470~1520MHz	-	0.5	1.0	dB
Noise Figure	NF		-	1.2	1.5	dB
Pout at 1dB Gain Compression point	P_{-1dB}		-3.0	-1.0	-	dBm
Output 3rd order Intercept point	OIP3	f_{RF}=1489.0+1489.1MHz	+8.0	+13.0	-	dBm
RF IN VSWR	$VSWR_i$		-	1.5	-	
RF OUT VSWR	$VSWR_o$		-	1.5	-	

■ELECTRICAL CHARACTERISTICS 2 (Mixer)

GENERAL CONDITIONS: T_a=+25°C, V_{LNA}=0V, V_{MIX}=V_{LO}=2.7V, f_{RF}=1489MHz, f_{LO}=1619MHz P_{RF}=-30dBm, P_{LO}=-15dBm, Z_s=Z_l=50Ω, with test circuit 1

PARAMETER	SYMBOL	CONDITIONS	MIN	TYP	MAX	UNITS
Operating Frequency	freq		1470	1489	1510	MHz
Mixer Voltage	V_{MIX}		2.5	2.7	4.5	V
Local Amplifier Voltage	V_{LO}		2.5	2.7	4.5	V
Mixer Operating Current	I_{MIX}	P_{RF}, P_{LO}=OFF	-	4.3	5.7	mA
Local Amplifier Operating Current	I_{LO}	P_{RF}, P_{LO}=OFF	-	0.8	1.3	mA
Conversion Gain	G_c		11.0	12.5	-	dB
Noise Figure	NF		-	6.0	9.0	dB
Output 3rd Order Intercept Point	OIP3	f_{RF}=1489.0+1489.1MHz	+7.0	+10.0	-	dBm
MIXER IN VSWR	$VSWR_M$		-	1.5	-	
LOCAL IN VSWR	$VSWR_L$		-	1.5	-	
IF OUT VSWR	$VSWR_I$		-	1.5	-	

■ELECTRICAL CHARACTERISTICS 3 (LNA)

GENERAL CONDITIONS: T_a=+25°C, V_{LNA}=2.7V, V_{MIX}=V_{LO}=0V, f_{RF}=1900MHz, P_{RF}=-36dBm, Z_s=Z_l=50Ω, with test circuit 2

PARAMETER	SYMBOL	CONDITIONS	MIN	TYP	MAX	UNITS
Operating Frequency	freq		1890	1900	1920	MHz
LNA Voltage	V_{LNA}		2.5	2.7	4.5	V
LNA Operating Current	I_{LNA}	P_{RF}, P_{LO}=OFF	-	3.2	4.1	mA
Small Signal Gain	Gain		14.0	16.0	18.0	dB
Gain Flatness	G_{flat}	f_{RF}=1890~1920MHz	-	0.5	1.0	dB
Noise Figure	NF		-	1.3	1.5	dB
Pout at 1dB Gain Compression point	P_{-1dB}		-2.0	0	-	dBm
Output 3rd Order Intercept point	OIP3	f_{RF}=1900.0+1900.1MHz	+9.0	+13.0	-	dBm
RF IN VSWR	$VSWR_i$		-	2.0	-	
RF OUT VSWR	$VSWR_o$		-	2.0	-	

■ELECTRICAL CHARACTERISTICS 4 (Mixer)

GENERAL CONDITIONS: T_a=+25°C, V_{LNA}=0V, V_{MIX}=V_{LO}=2.7V, f_{RF}=1900MHz, f_{LO}=1660MHz P_{RF}=-30dBm, P_{LO}=-15dBm, Z_s=Z_l=50Ω, with test circuit 2

PARAMETER	SYMBOL	CONDITIONS	MIN	TYP	MAX	UNITS
Operating Frequency	freq		1890	1900	1920	MHz
Mixer Voltage	V_{MIX}		2.5	2.7	4.5	V
Local Amplifier Voltage	V_{LO}		2.5	2.7	4.5	V
Mixer Operating Current	I_{MIX}	P_{RF}, P_{LO}=OFF	-	4.3	5.7	mA
Local Amplifier Operating Current	I_{LO}	P_{RF}, P_{LO}=OFF	-	0.8	1.3	mA
Conversion Gain	G_c		7.0	9.0	-	dB
Noise Figure	NF		-	6.5	9.0	dB
Output 3rd Order Intercept point	OIP3	f_{RF}=1900.0+1900.1MHz	+7.0	+11.0	-	dBm
MIXER IN VSWR	$VSWR_M$		-	1.5	-	
LOCAL IN VSWR	$VSWR_L$		-	1.5	-	
IF OUT VSWR	$VSWR_I$		-	1.5	-	

■TERMINAL INFORMATION

No.	SYMBOL	FUNCTION
1	LNAIN	RF input terminal of LNA. An external matching circuit is required.
2	LNACAP	Terminal for the bypass capacitor of LNA. The bypass capacitor C1 shown in test circuits should be connected to this terminal as close as possible.
3	GND	Ground terminal (0V)
4	IFOUT	IF signal output terminal. The IF signal is output through external matching circuit connected to this terminal. Please connect inductances L7, L8 and power supply as shown in test circuits, since this terminal is also the terminal of mixer power supply.
5	VLO	Power supply terminal for local amplifier. Please place R1, R2 and L11 shown in test circuits at very close to this terminal.
6	LOIN	Local signal input terminal to local amplifier. An external matching circuit is required.
7	BPC	Terminal for the bypass capacitor of mixer. The bypass capacitor C4 shown in test circuits should be connected to this terminal as close as possible.
8	MIXIN	RF signal input terminal to mixer. An external matching circuit is required.
9	GND	Ground terminal (0V)
10	LNAOUT	Signal output terminal of LNA. The RF signal from LNA goes out through external matching circuit connected to this terminal. Please connect inductances L3, L4 and power supply as shown in test circuits, since this terminal is also the terminal of LNA power supply.

CAUTION

1) Ground terminal (No.3, 9) should be connected to the ground plane as close as possible.

■**TYPICAL CHARACTERISTICS 1** (LNA, f=1.5GHz, f_{LO}=1619MHz, with test circuit 1)

Gain, NF vs. Frequency

(V_{LNA}=2.7V)

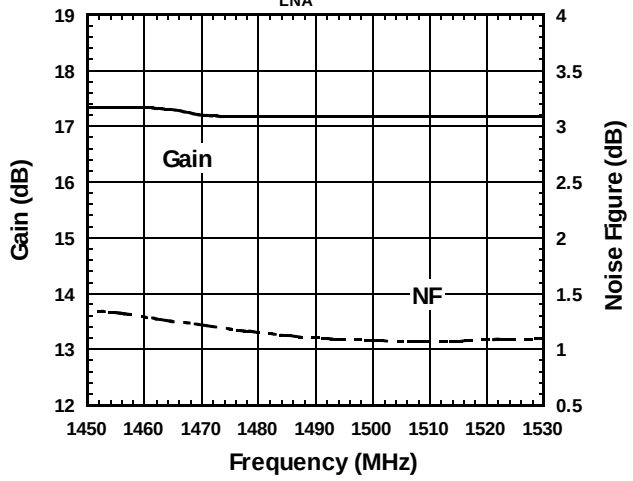

Pout vs. Pin

(V_{LNA}=2.7V, f=1489MHz)

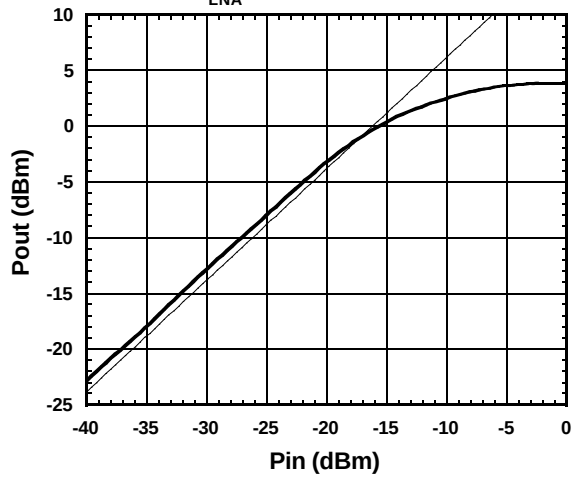

Pout, IM3 vs. Pin

(V_{LNA}=2.7V, f=1489+1489.1MHz)

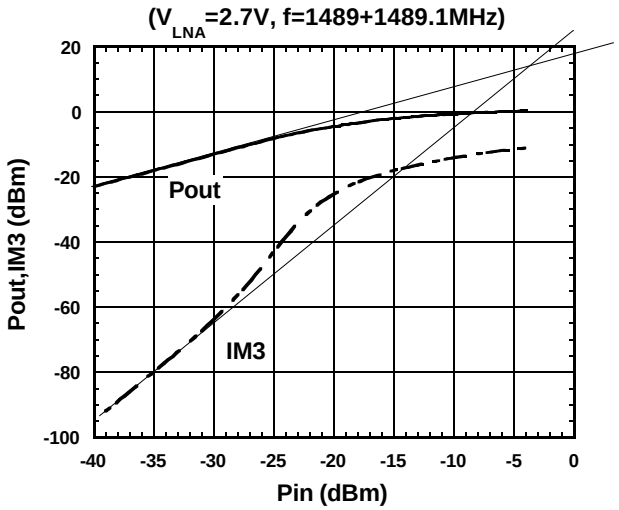

Gain, NF vs. V_{LNA}

(f=1489MHz)

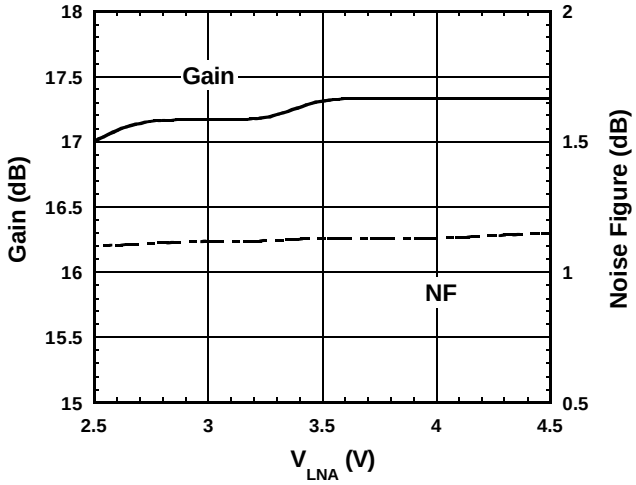

I_{LNA} vs. V_{LNA}

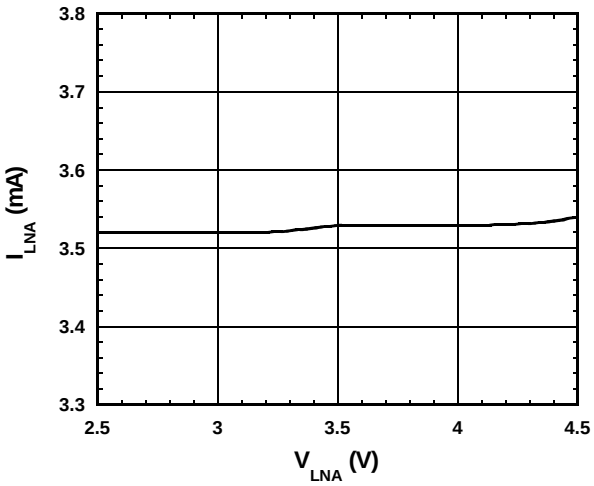

P-1dB vs. V_{LNA}

(f=1489MHz)

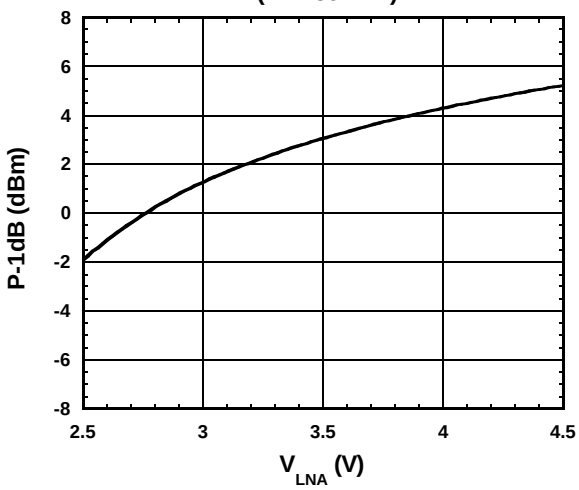

■**TYPICAL CHARACTERISTICS 1** (LNA, f=1.5GHz, f_{LO}=1619MHz, with test circuit 1)

OIP3, IIP3 vs. V_{LNA}

(f=1489+1489.1MHz,Pin=-36dBm)

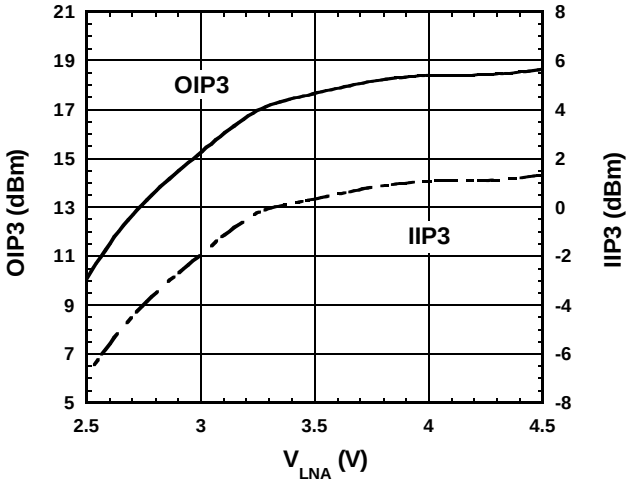

Gain, I_{LNA} vs. Temperature

(V_{LNA}=2.7V, f=1489MHz)

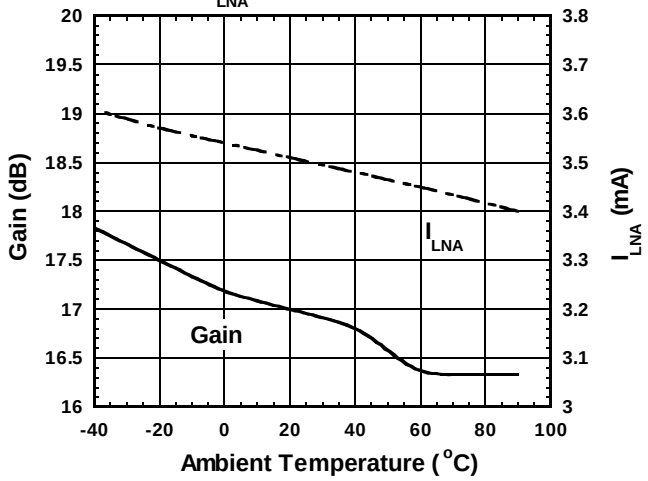

NF,P-1dB vs. Temperature

(V_{LNA}=2.7V,f=1489MHz)

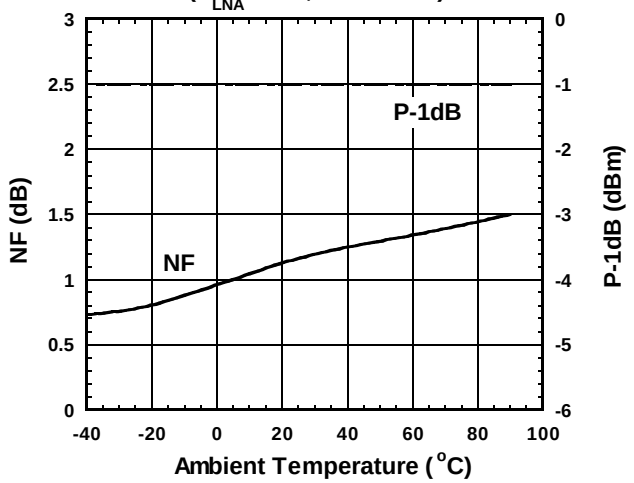

OIP3,IIP3 vs. Temperature

(V_{LNA}=2.7V,f=1489+1489.1MHz,Pin=-36dBm)

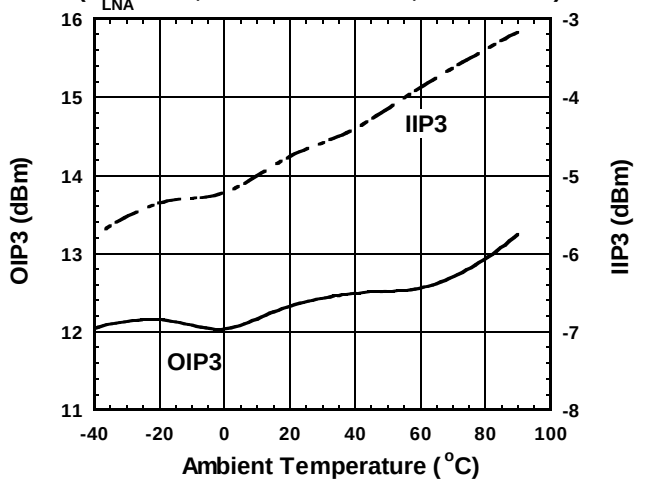

The value of OIP3 and IIP3 shown in typical characteristics are calculated

$$OIP3=\frac{3\times Pout-IM3}{2}$$

IIP3=OIP3-Gain @Pin=-36dBm

■**TYPICAL CHARACTERISTICS 1** (LNA, f=1.5GHz, f_{LO}=1619MHz, with test circuit 1)

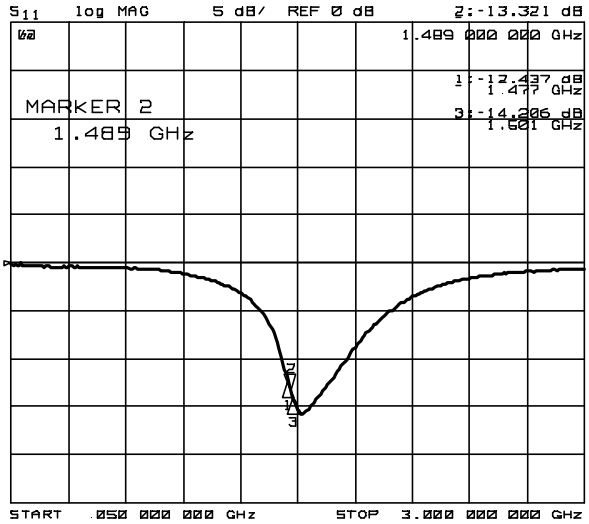

S11

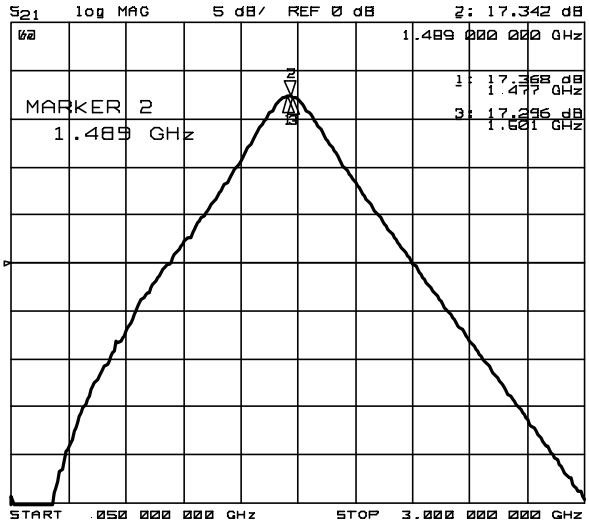

S21

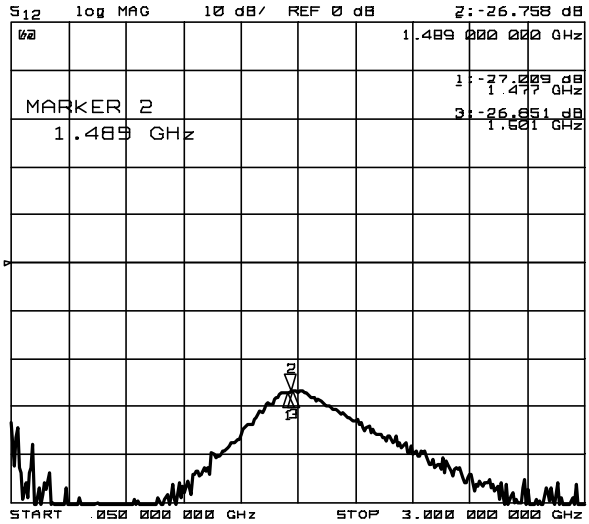

S12

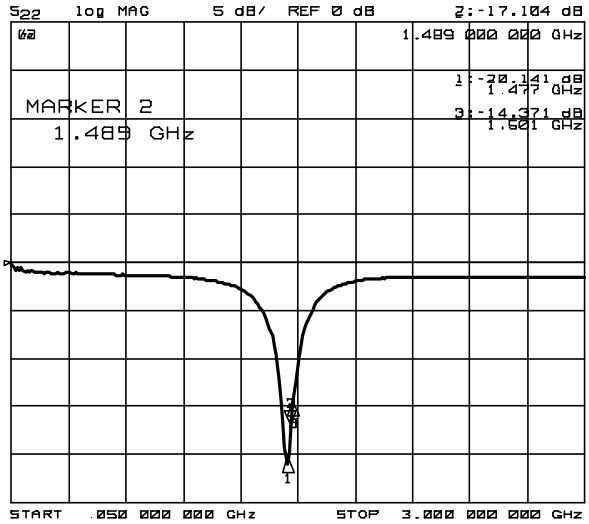

S22

Condition

V_{LNA}=2.7V

V_{MIX}=V_{LO}=0V

■**TYPICAL CHARACTERISTICS 1** (MIXER, f=1.5GHz, f_{LO}=1619MHz, with test circuit 1)

Conversion Gain, Noise Figure vs. RF Frequency

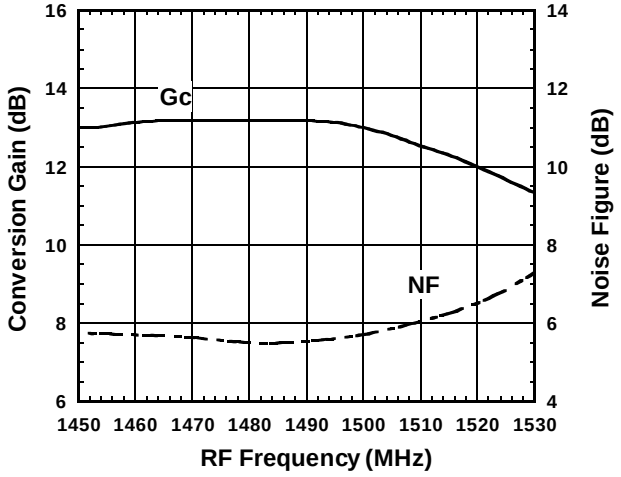

Condition
f_{IF}=130MHz
P_{RF}=-30dBm
P_{LO}=-15dBm
V_{MIX}=V_{LO}=2.7V
Upper LOCAL

Conversion Gain, Noise Figure vs. LO Power

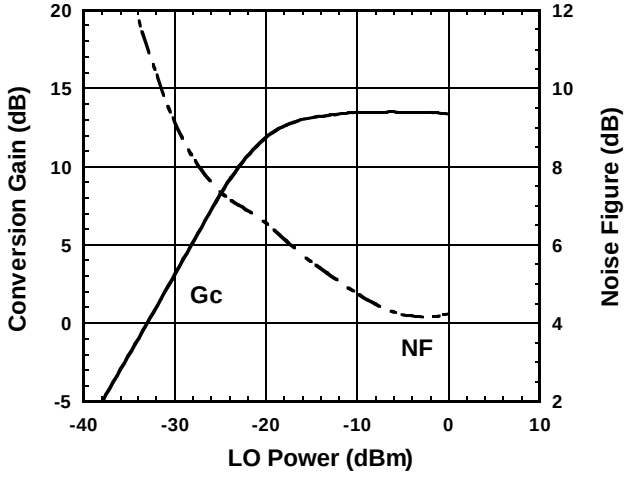

Condition
f_{IF}=130MHz
f_{RF}=1489MHz, P_{RF}=-30dBm
f_{LO}=1619MHz
V_{MIX}=V_{LO}=2.7V

OIP3, IIP3 vs. LO Power

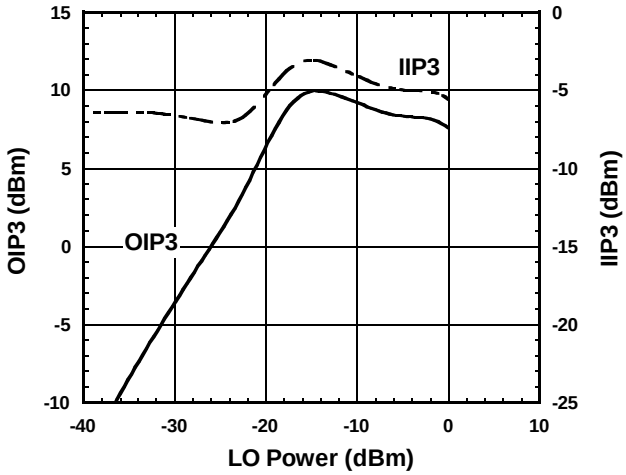

Condition
f_{IF}=130MHz
f_{RF1}=1489.0MHz, P_{RF}=-30dBm
f_{RF2}=1489.1MHz
f_{LO}=1619MHz
V_{MIX}=V_{LO}=2.7V

$$OIP3=\frac{3\times IF-IM3}{2}$$

IIP3=OIP3-Gc
@ P_{RF} =-30dBm

■**TYPICAL CHARACTERISTICS 1** (MIXER, f=1.5GHz, f_{LO}=1619MHz, with test circuit 1)

Conversion Gain, Noise Figure vs. V_{MIX}, V_{LO}

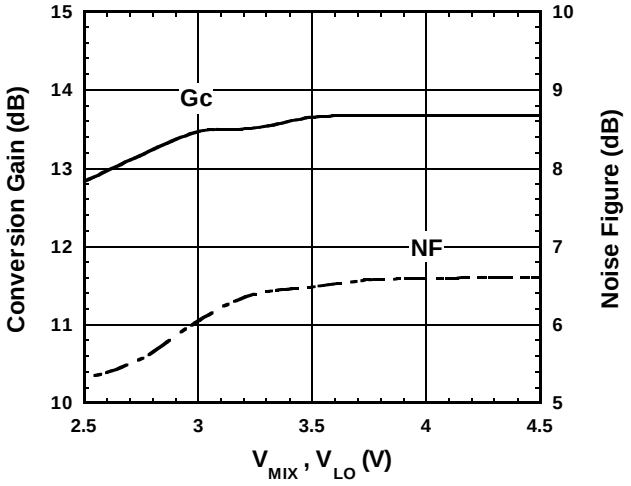

Condition
f_{IF}=130MHz
f_{RF}=1489MHz, P_{RF}=-30dBm
f_{LO}=1619MHz, P_{LO}=-15dBm

OIP3, IIP3 vs. V_{MIX}, V_{LO}

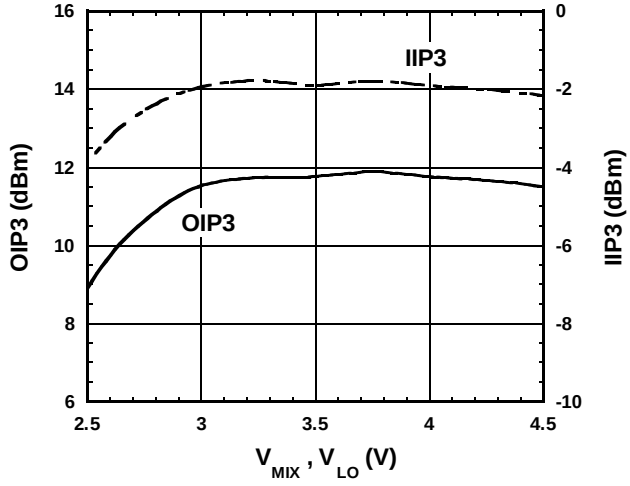

Condition
f_{IF}=130MHz
f_{RF1}=1489.0MHz, P_{RF}=-30dBm
f_{RF2}=1489.1MHz
f_{LO}=1619MHz, P_{LO}=-15dBm

$$OIP3=\frac{3\times IF-IM3}{2}$$

IIP3=OIP3-Gc
@ P_{RF} =-30dBm

IF, IM3 vs. RF Power

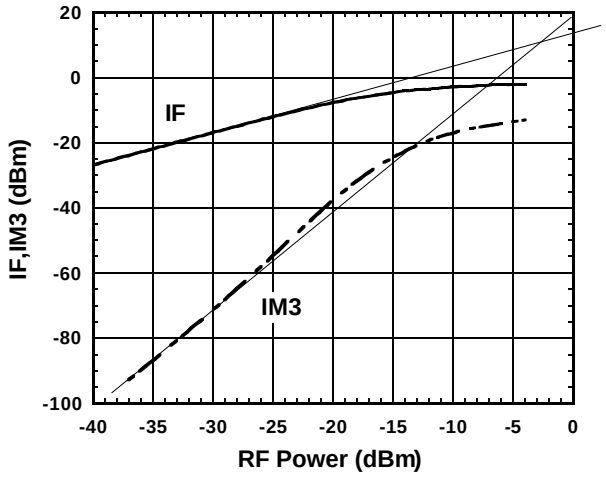

Condition
f_{IF}=130MHz
f_{RF1}=1489.0MHz
f_{RF2}=1489.1MHz
f_{LO}=1619MHz, P_{LO}=-15dBm
V_{MIX}=V_{LO}=2.7V

IF Output Power vs. RF Power

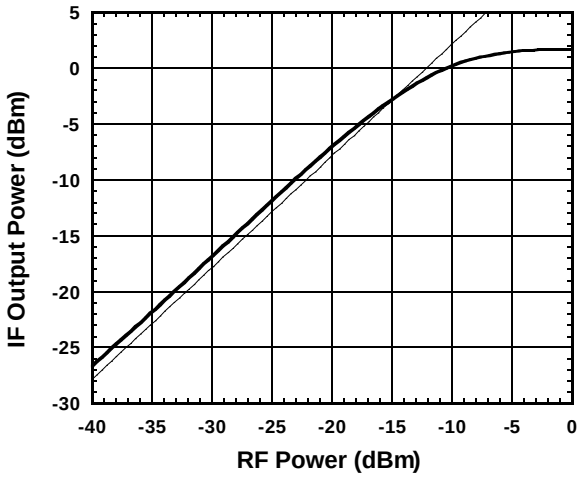

Condition
f_{IF}=130MHz
f_{RF}=1489MHz
f_{LO}=1619MHz, P_{LO}=-15dBm
V_{MIX}=V_{LO}=2.7V

■**TYPICAL CHARACTERISTICS 1** (MIXER, f=1.5GHz, f_{LO}=1619MHz, with test circuit 1)

Conversion Gain vs. LO Power Temperature Response

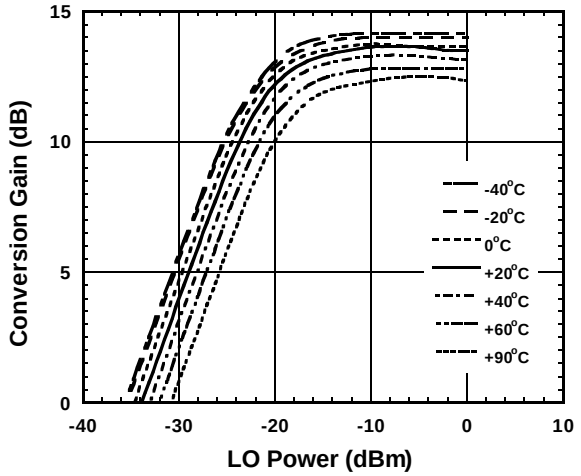

Condition
f_{IF}=130MHz
f_{RF}=1489MHz, P_{RF}=-30dBm
f_{LO}=1619MHz
V_{MIX}=V_{LO}=2.7V

Noise Figure vs. LO Power Temperature Response

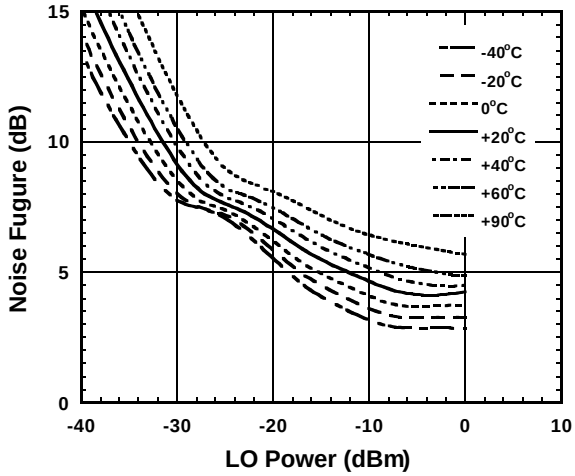

Condition
f_{IF}=130MHz
f_{RF}=1489MHz
f_{LO}=1619MHz
V_{MIX}=V_{LO}=2.7V

IIP3 vs. LO Power Temperature Response

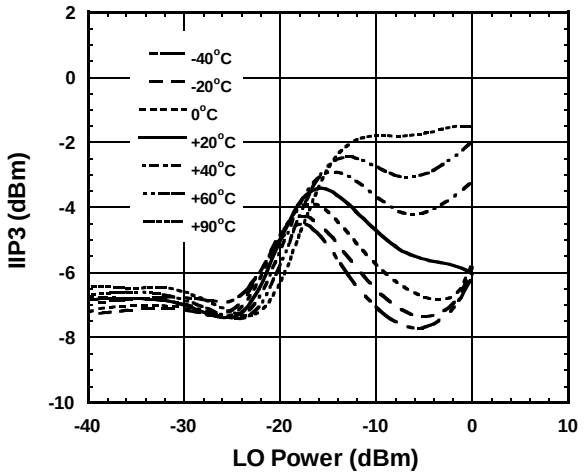

Condition
f_{IF}=130MHz
f_{RF1}=1489.0MHz, P_{RF}=-30dBm
f_{RF2}=1489.1MHz
f_{LO}=1619MHz
V_{MIX}=V_{LO}=2.7V

$$IIP3=\frac{3\times IF-IM3}{2}-Gc$$

@ P_{RF} =-30dBm

■**TYPICAL CHARACTERISTICS 1** (MIXER, f=1.5GHz, f_{LO}=1619MHz, with test circuit 1)

Conversion Gain vs. V_{MIX}, V_{LO} Temperature Response

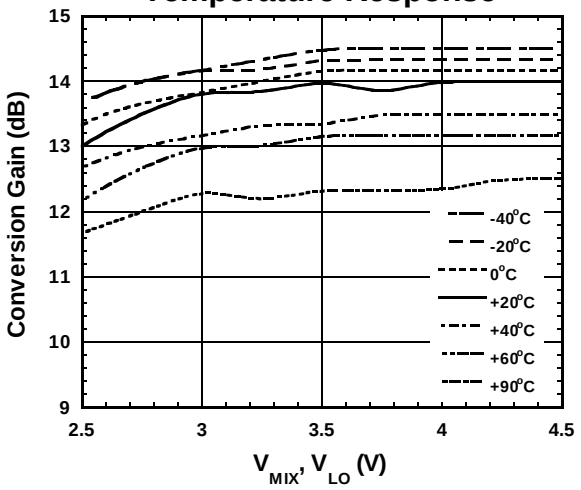

Condition
f_{IF}=130MHz
f_{RF}=1489MHz,P_{RF}=-30dBm
f_{LO}=1619MHz, P_{LO}=-15dBm

Noise Figure vs. V_{MIX}, V_{LO} Temperature Response

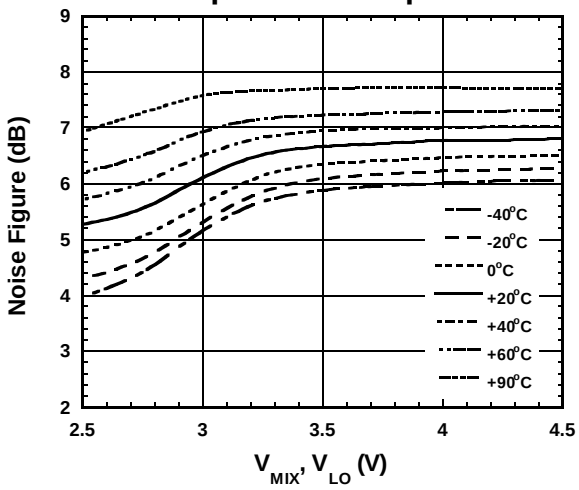

Condition
f_{IF}=130MHz
f_{RF}=1489MHz
f_{LO}=1619MHz, P_{LO}=-15dBm

IIP3 vs. V_{MIX}, V_{LO} Temperature Response

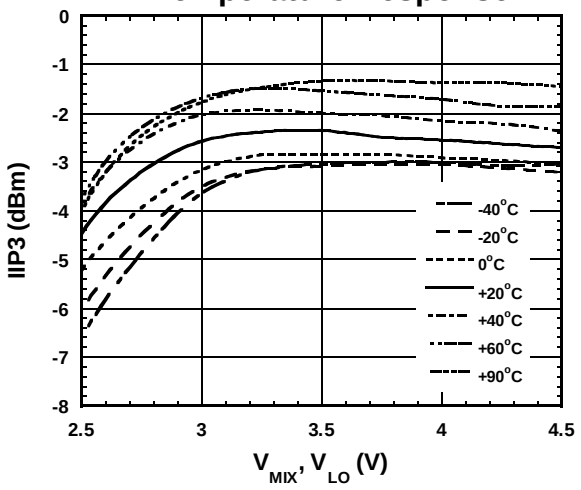

Condition
f_{IF}=130MHz
f_{RF1}=1489.0MHz,P_{RF}=-30dBm
f_{RF2}=1489.1MHz
f_{LO}=1619MHz, P_{LO}=-15dBm

$$IIP3=\frac{3\times IF-IM3}{2}-Gc$$

@ P_{RF} =-30dBm

■TYPICAL CHARACTERISTICS 1 (MIXER, f=1.5GHz, f_{LO}=1619MHz, with test circuit 1)

MIXER IN PORT IMPEDANCE
(P_{LO}=-15dBm)

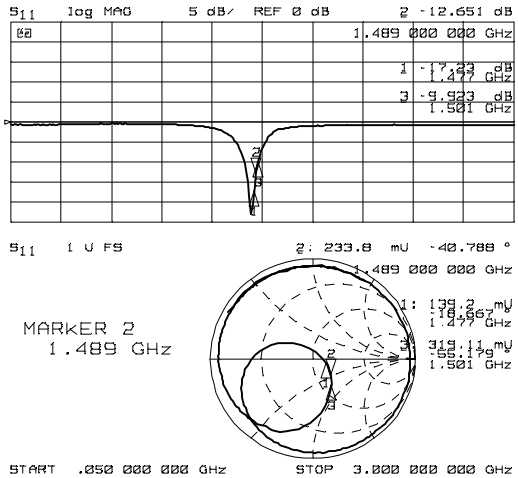

Condition
V_{LNA}=0V
V_{MIX}=V_{LO}=2.7V

LOCAL IN PORT IMPEDANCE

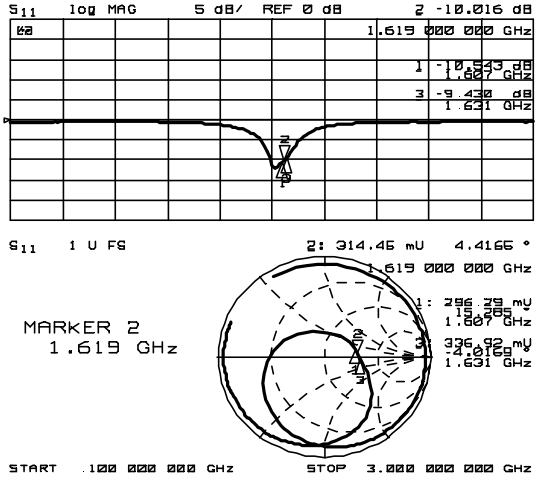

Condition
V_{LNA}=0V
V_{MIX}=V_{LO}=2.7V

IF OUT PORT IMPEDANCE

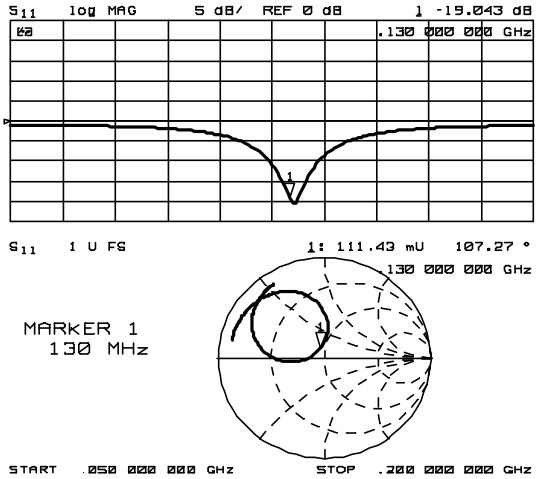

Condition
V_{LNA}=0V
V_{MIX}=V_{LO}=2.7V

■TYPICAL CHARACTERISTICS 1 (LNA+MIXER, f=1.5GHz, f_{LO}=1619MHz, with test circuit 1)

RF IN – LOCAL IN ISOLATION
(RF IN → LOCAL IN)

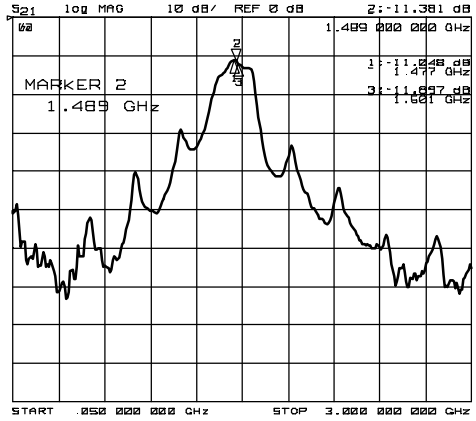

Condition
V_{LNA}=2.7V
V_{MIX}=V_{LO}=2.7V
Port1:RF IN
Port2:LOCAL IN

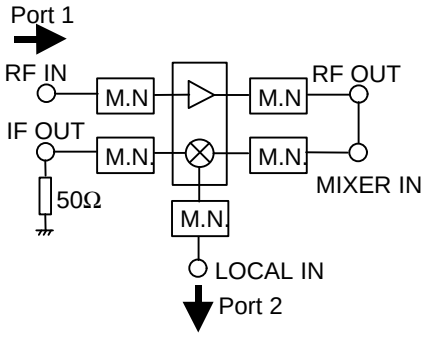

RF OUT – MIXER IN
Coaxial Cable
Z0=50 ohm, L=260 mm

RF OUT – MIXER IN ISOLATION
(RF OUT → MIXER IN)

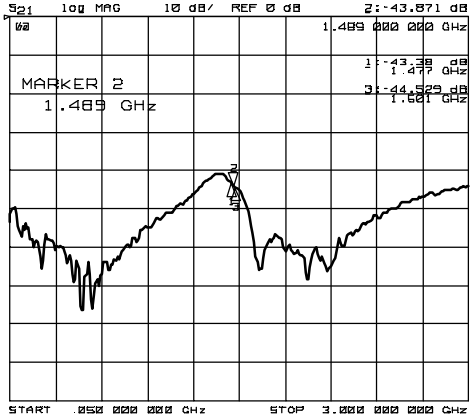

Condition
V_{LNA}=2.7V
V_{MIX}=V_{LO}=2.7V
Port1:RF OUT
Port2:MIXER IN

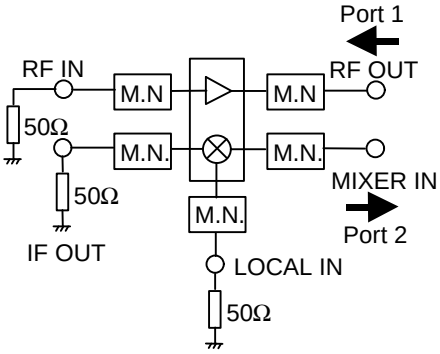

RF IN – IF OUT ISOLATION
(RF IN → IF OUT)

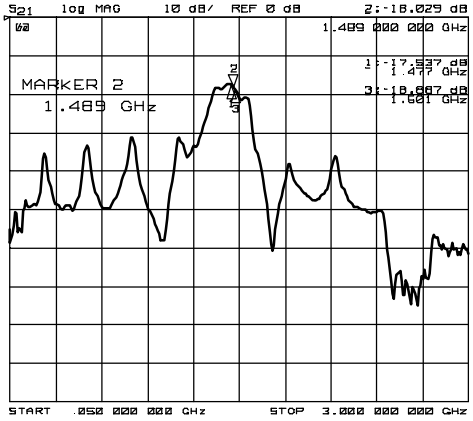

Condition
V_{LNA}=2.7V
V_{MIX}=V_{LO}=2.7V
Port1:RF IN
Port2:IF OUT

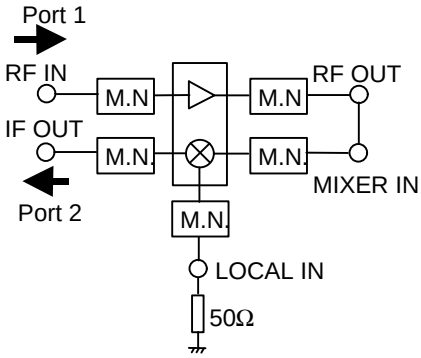

RF OUT – MIXER IN
Coaxial Cable
Z0=50 ohm, L=260 mm

■**TYPICAL CHARACTERISTICS 1** (LNA+MIXER, f=1.5GHz, f_{LO}=1619MHz, with test circuit 1)

LOCAL IN to IF OUT Isolation vs. LO Frequency

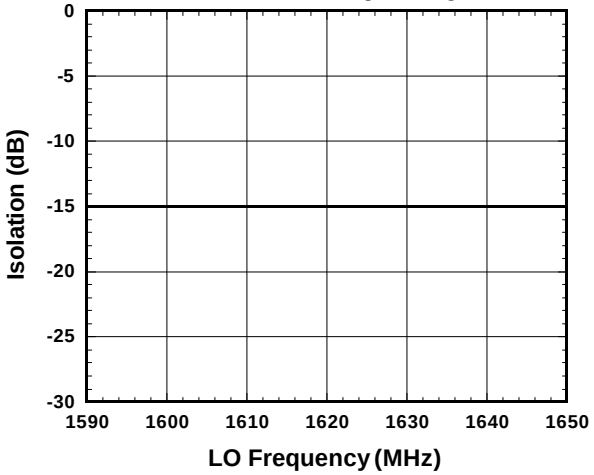

Condition
V_{LNA}=2.7V
V_{MIX}=V_{LO}=2.7V
P_{LO}=-15dBm
Port1: LOCAL IN
Port2: IF OUT

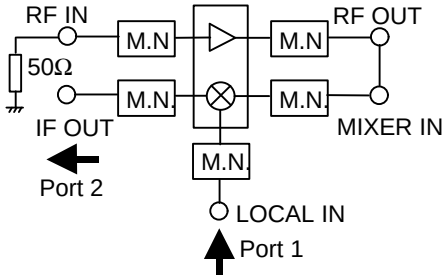

RF OUT – MIXER IN
Coaxial Cable
Z0=50 ohm, L=260 mm

LOCAL IN to RF IN Isolation vs. LO Frequency

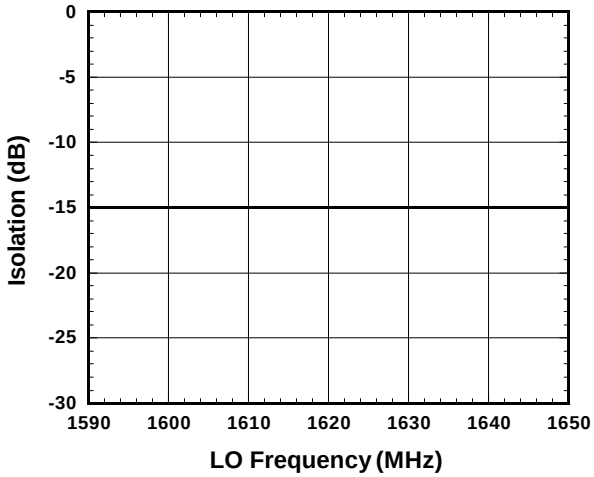

Condition
V_{LNA}=2.7V
V_{MIX}=V_{LO}=2.7V
P_{LO}=-15dBm
Port1: LOCAL IN
Port2: RF IN

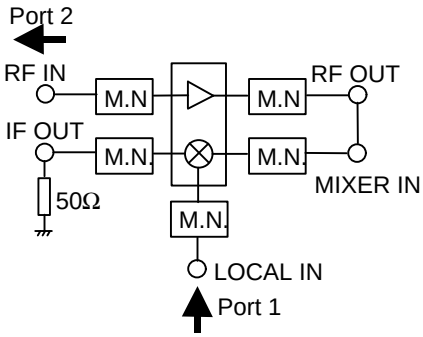

RF OUT – MIXER IN
Coaxial Cable
Z0=50 ohm, L=260 mm

■**TYPICAL CHARACTERISTICS 2** (LNA, f=1.9GHz, f_{LO}=1660MHz, with test circuit 2)

Gain, NF vs. Frequency

(V_{DD}=2.7V)

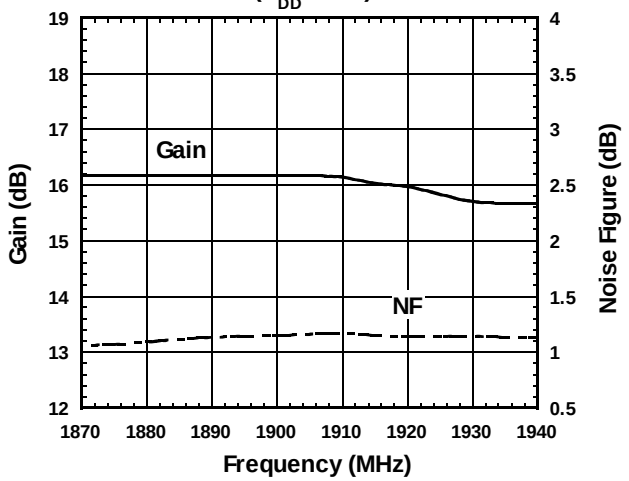

Pout vs. Pin

(V_{LNA}=2.7V, f=1900MHz)

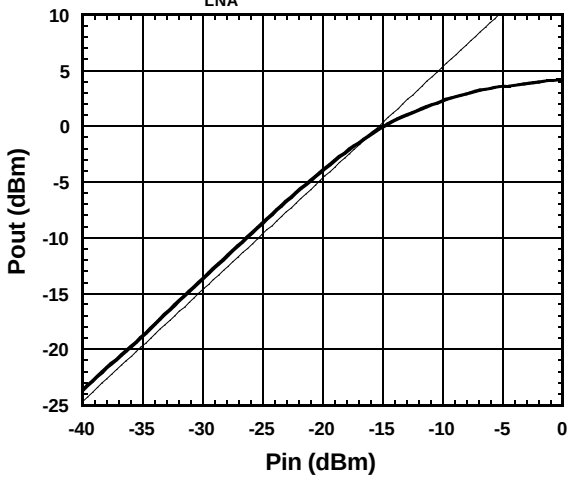

Pout , IM3 vs. Pin

(V_{LNA}=2.7V, f=1900.0+1900.1MHz)

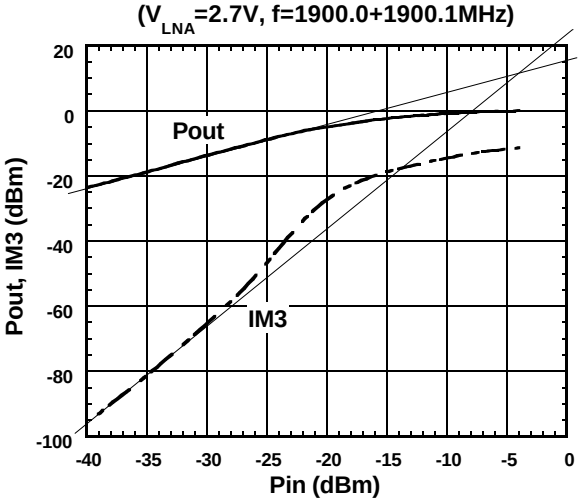

Gain, NF vs. V_{LNA}

(f=1900MHz)

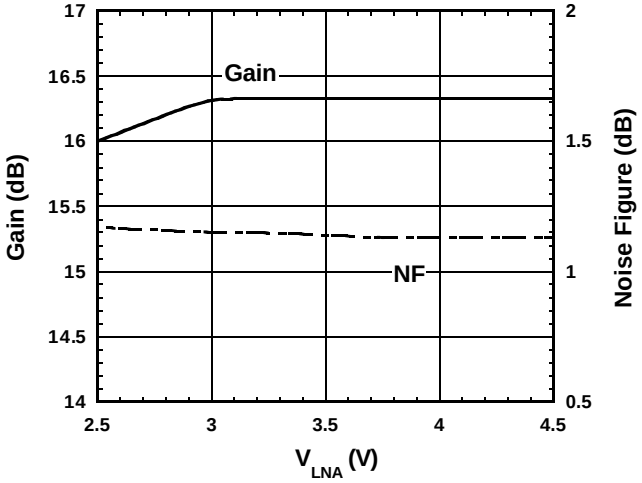

I_{LNA} vs. V_{LNA}

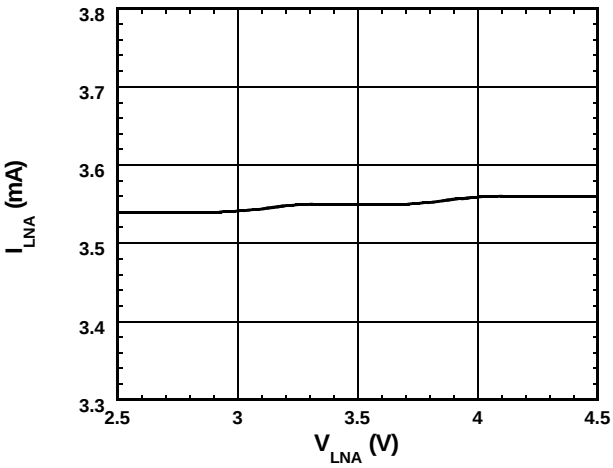

P-1dB vs. V_{LNA}

(f=1900MHz)

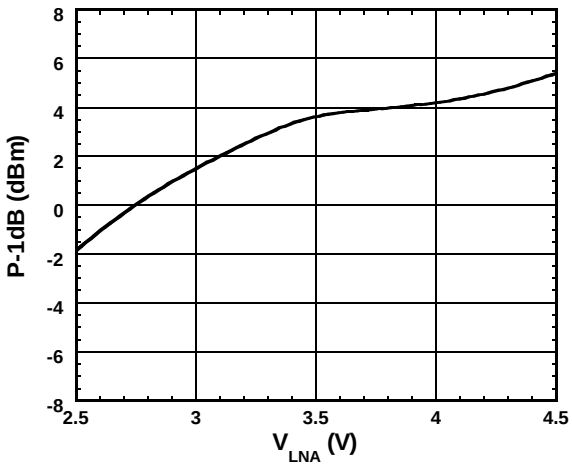

■**TYPICAL CHARACTERISTICS 2** (LNA, f=1.9GHz, f_{LO}=1660MHz, with test circuit 2)

OIP3 , IIP3 vs. V_{LNA}

(f=1900.0+1900.1MHz,Pin=-36dBm)

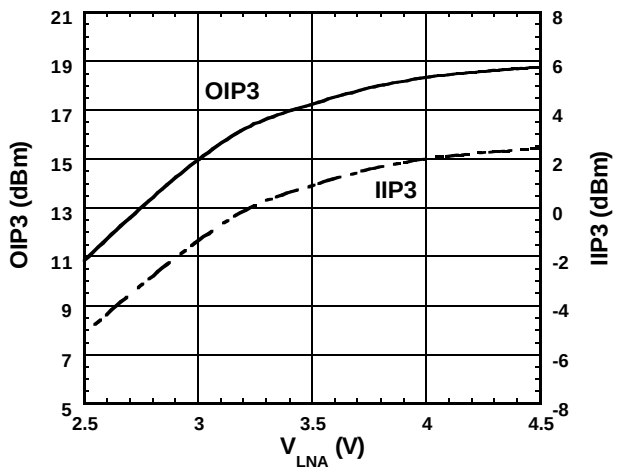

Gain, I_{LNA} vs. Temperature

(V_{LNA}=2.7V, f=1900MHz)

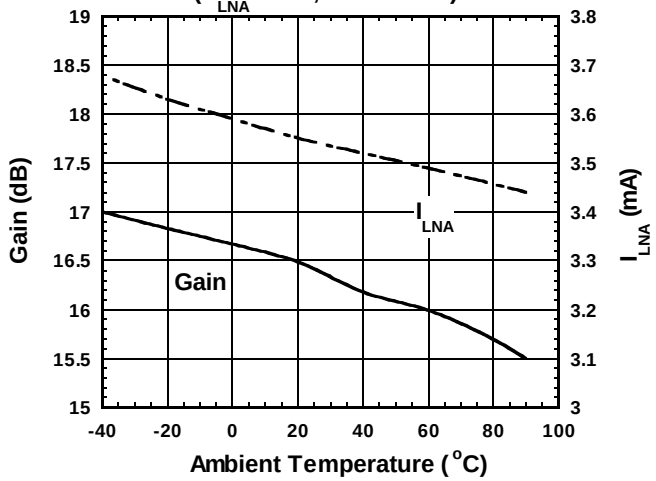

NF,P-1dB vs. Temperature

(V_{LNA}=2.7V, f=1900MHz)

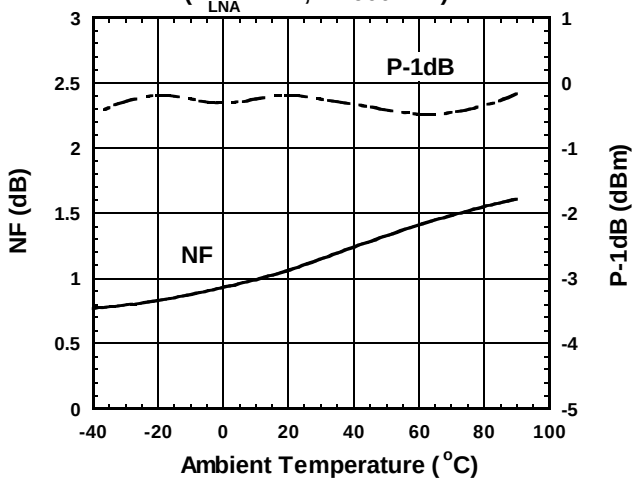

OIP3,IIP3 vs. Temperature

(V_{LNA}=2.7V, f=1900.0+1900.1MHz,Pin=-36dBm)

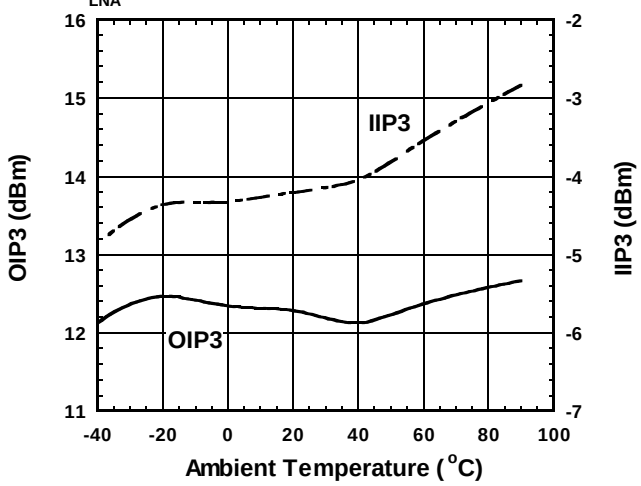

The value of OIP3 and IIP3 shown in typical characteristics are calculated

$$OIP3=\frac{3\times Pout-IM3}{2}$$

IIP3=OIP3-Gain @Pin=-36dBm

■TYPICAL CHARACTERISTICS 2 (LNA, f=1.9GHz, f_{LO}=1660MHz, with test circuit 2)

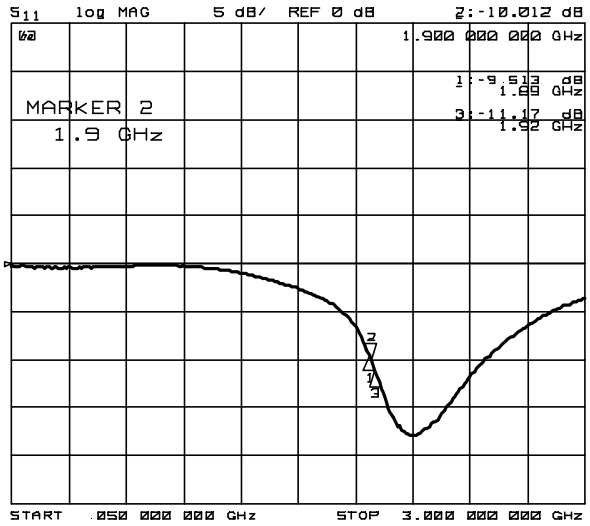

S11

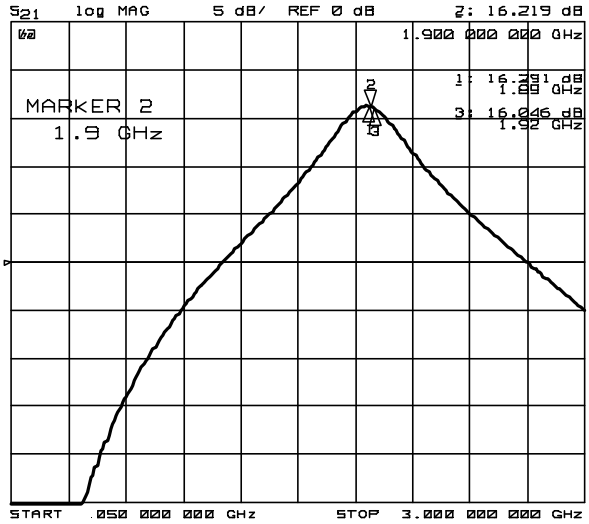

S21

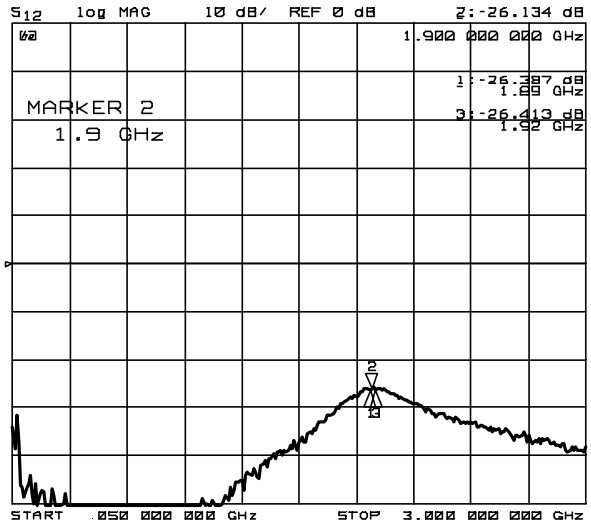

S12

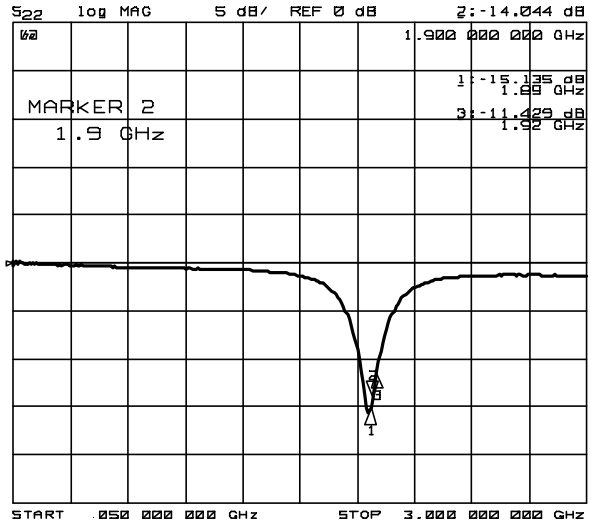

S22

Condition

V_{LNA}=2.7V

V_{MIX}=V_{LO}=0V

■**TYPICAL CHARACTERISTICS 2** (MIXER, f=1.9GHz, f_{LO}=1660MHz, with test circuit 2)

Conversion Gain, Noise Figure vs. RF Frequency

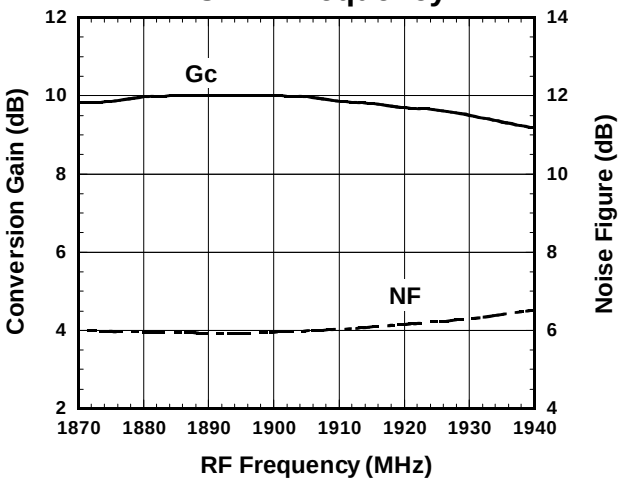

Condition
f_{IF}=240MHz
P_{RF}=-30dBm
P_{LO}=-15dBm
V_{MIX}=V_{LO}=2.7V
Upper LOCAL

Conversion Gain, Noise Figure vs. LO Power

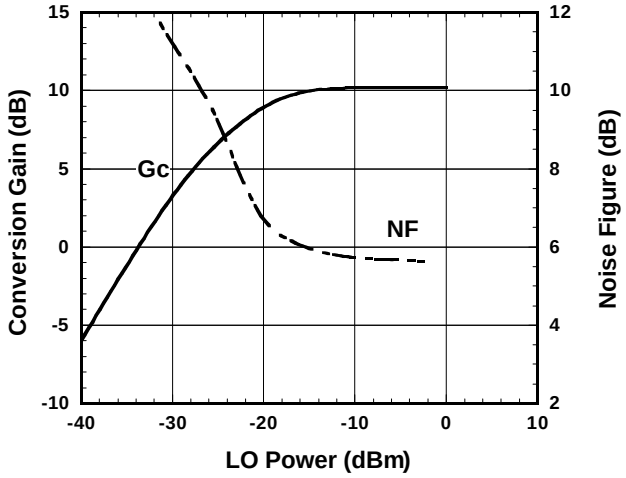

Condition
f_{IF}=240MHz
f_{RF}=1900MHz, P_{RF}=-30dBm
f_{LO}=1660MHz
V_{MIX}=V_{LO}=2.7V

OIP3 , IIP3 vs. LO Power

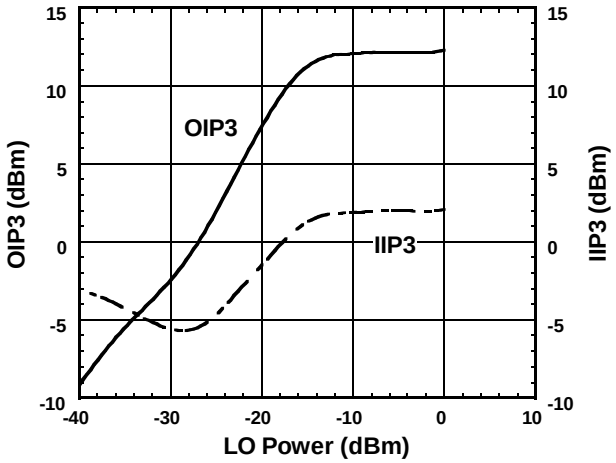

Condition
f_{IF}=240MHz
f_{RF1}=1900.0MHz, P_{RF}=-30dBm
f_{RF2}=1900.1MHz
f_{LO}=1660MHz
V_{MIX}=V_{LO}=2.7V

$$OIP3=\frac{3\times IF-IM3}{2}$$

IIP3=OIP3-Gc
@ P_{RF} =-30dBm

■**TYPICAL CHARACTERISTICS 2** (MIXER, f=1.9GHz, f_{LO}=1660MHz, with test circuit 2)

Conversion Gain, Noise Figure vs. V_{MIX}, V_{LO}

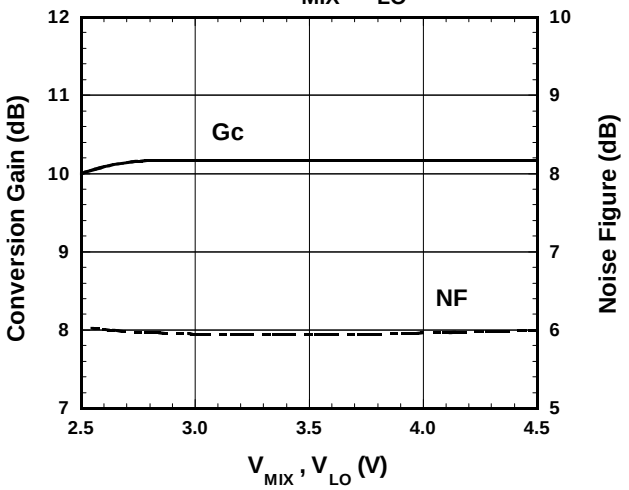

Condition
f_{IF}=240MHz
f_{RF}=1900MHz, P_{RF}=-30dBm
f_{LO}=1660MHz, P_{LO}=-15dBm

OIP3 , IIP3 vs. V_{MIX}, V_{LO}

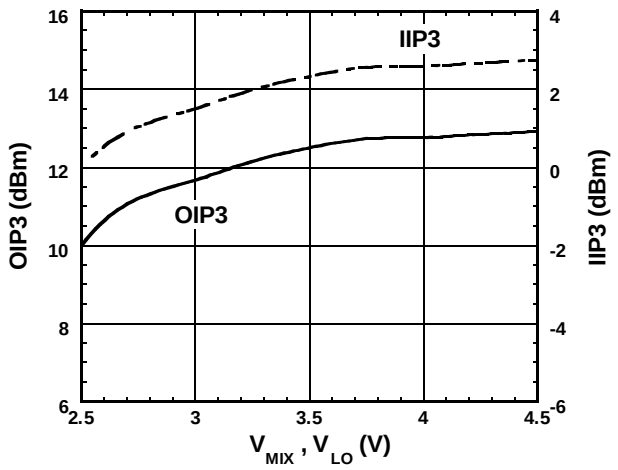

Condition
f_{IF}=240MHz
f_{RF1}=1900.0MHz, P_{RF}=-30dBm
f_{RF2}=1900.1MHz
f_{LO}=1660MHz, P_{LO}=-15dBm

$$OIP3=\frac{3\times IF-IM3}{2}$$

IIP3=OIP3-Gc
@ P_{RF} =-30dBm

IF , IM3 vs. RF Power

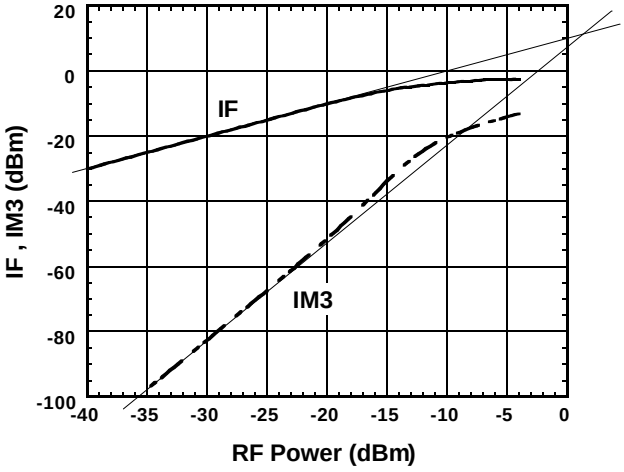

Condition
f_{IF}=240MHz
f_{RF1}=1900.0MHz
f_{RF2}=1900.1MHz
f_{LO}=1660MHz, P_{LO}=-15dBm
V_{MIX}=V_{LO}=2.7V

IF Output Power vs. RF Power

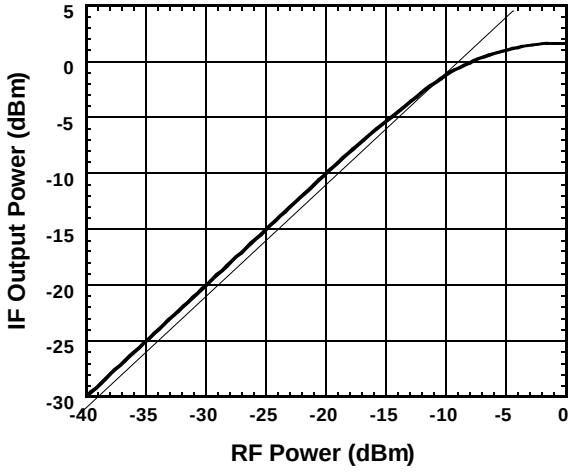

Condition
f_{IF}=240MHz
f_{RF}=1900MHz
f_{LO}=1660MHz, P_{LO}=-15dBm
V_{MIX}=V_{LO}=2.7V

■**TYPICAL CHARACTERISTICS 2** (MIXER, f=1.9GHz, f_{LO}=1660MHz, with test circuit 2)

Conversion Gain vs. LO Power Temperature Response

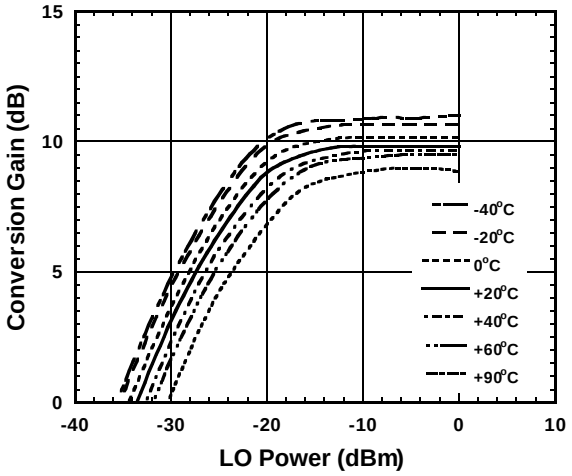

Condition
f_{IF}=240MHz
f_{RF}=1900MHz, P_{RF}=-30dBm
f_{LO}=1660MHz
V_{MIX}=V_{LO}=2.7V

Noise Figure vs. LO Power Temperature Response

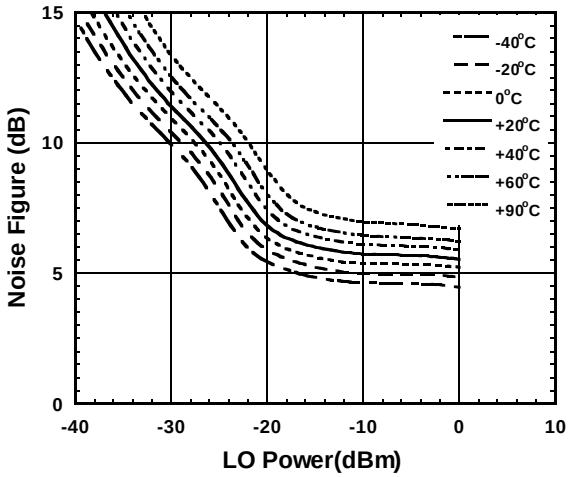

Condition
f_{IF}=240MHz
f_{RF}=1900MHz
f_{LO}=1660MHz
V_{MIX}=V_{LO}=2.7V

IIP3 vs. LO Power Temperature Response

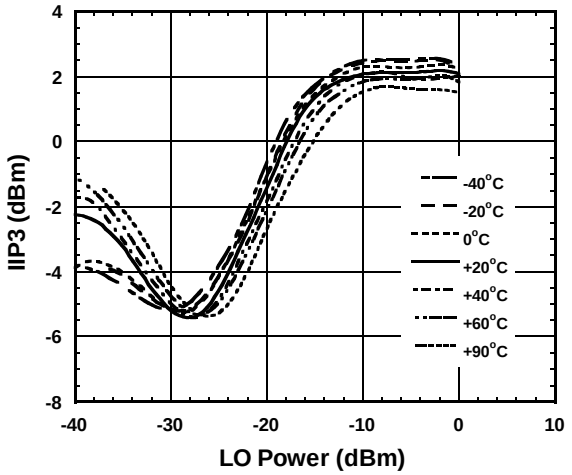

Condition
f_{IF}=240MHz
f_{RF1}=1900.0MHz, P_{RF}=-30dBm
f_{RF2}=1900.1MHz
f_{LO}=1660MHz
V_{MIX}=V_{LO}=2.7V

$$IIP3=\frac{3\times IF-IM3}{2}-Gc$$

@ P_{RF} =-30dBm

■**TYPICAL CHARACTERISTICS 2** (MIXER, f=1.9GHz, f_{LO}=1660MHz, with test circuit 2)

Conversion Gain vs. V_{MIX}, V_{LO}
Temperature Response

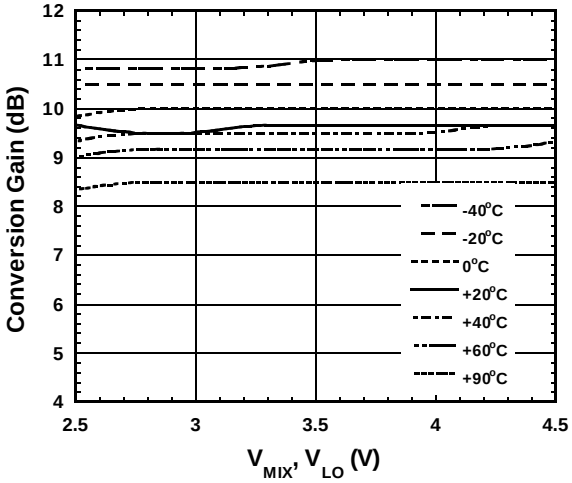

Condition
f_{IF}=240MHz
f_{RF}=1900MHz,P_{RF}=-30dBm
f_{LO}=1660MHz, P_{LO}=-15dBm

Noise Figure vs. V_{MIX}, V_{LO}
Temperature Response

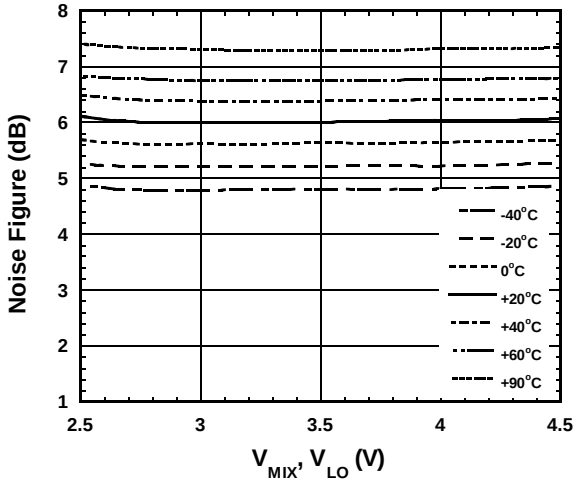

Condition
f_{IF}=240MHz
f_{RF}=1900MHz
f_{LO}=1660MHz, P_{LO}=-15dBm

IIP3 vs. V_{MIX}, V_{LO}
Temperature Response

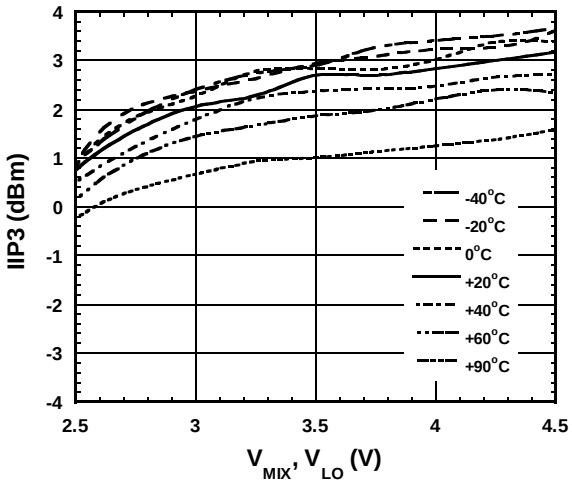

Condition
f_{IF}=240MHz
f_{RF1}=1900.0MHz,P_{RF}=-30dBm
f_{RF2}=1900.1MHz
f_{LO}=1660MHz, P_{LO}=-15dBm

$$IIP3=\frac{3\times IF-IM3}{2}-Gc$$

@ P_{RF} =-30dBm

■TYPICAL CHARACTERISTICS 2 (MIXER, f=1.9GHz, f_{LO}=1660MHz, with test circuit 2)

MIXER IN PORT IMPEDANCE

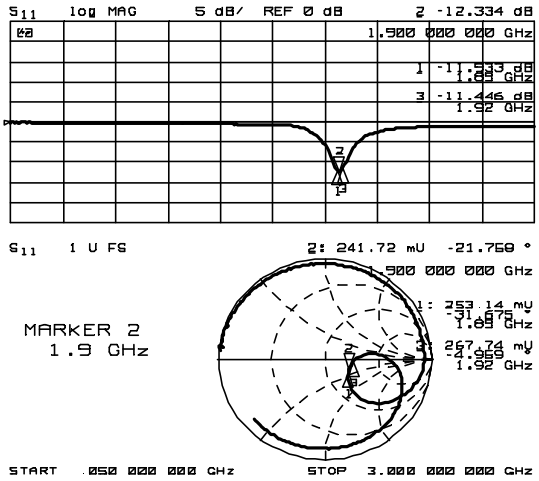

Condition

V_{LNA}=0V

V_{MIX}=V_{LO}=2.7V

LOCAL IN PORTIMPEDANCE

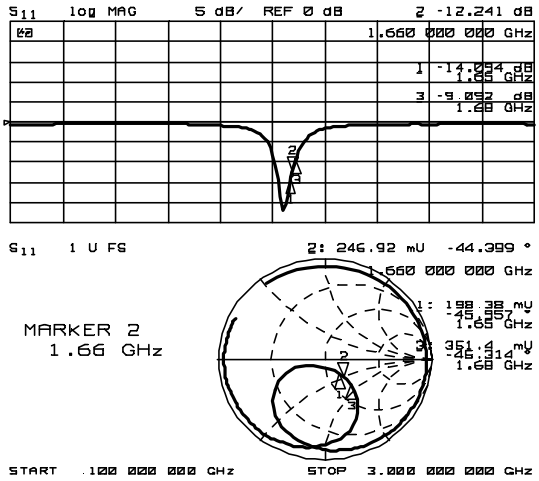

Condition

V_{LNA}=0V

V_{MIX}=V_{LO}=2.7V

IF OUT PORT IMPEDANCE

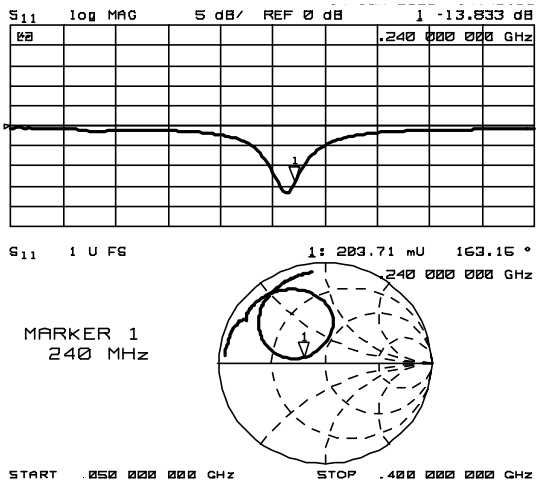

Condition

V_{LNA}=0V

V_{MIX}=V_{LO}=2.7V

■TYPICAL CHARACTERISTICS 2 (LNA+MIXER f=1.9GHz, f_{LO}=1660MHz, with test circuit 2)

RF IN – LOCAL IN ISOLATION
(RF IN → LOCAL IN)

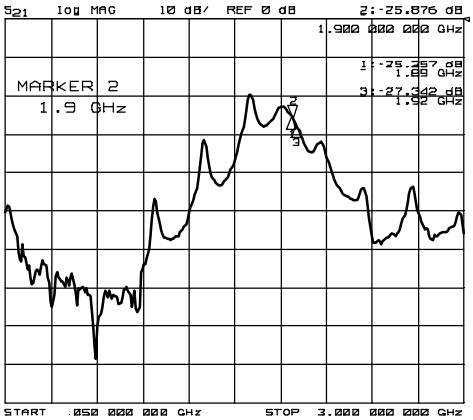

Condition
V_{LNA}=2.7V
V_{MIX}=V_{LO}=2.7V
Port1:RF IN
Port2:LOCAL IN

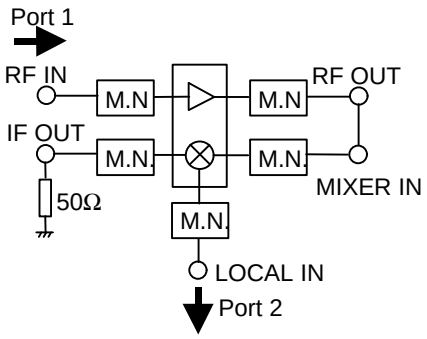

RF OUT – MIXER IN
Coaxial Cable
Z0=50 ohm, L=260 mm

RF OUT – MIXER IN ISOLATION
(RF OUT → MIXER IN)

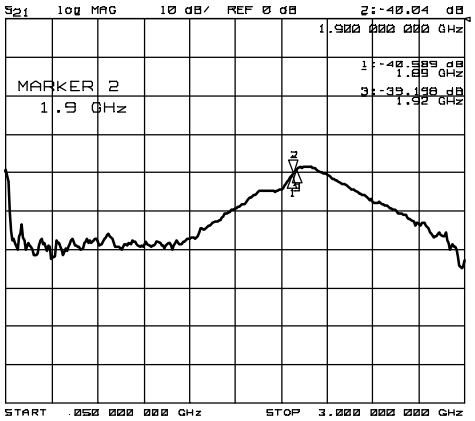

Condition
V_{LNA}=2.7V
V_{MIX}=V_{LO}=2.7V
Port1:RF OUT
Port2:MIXER IN

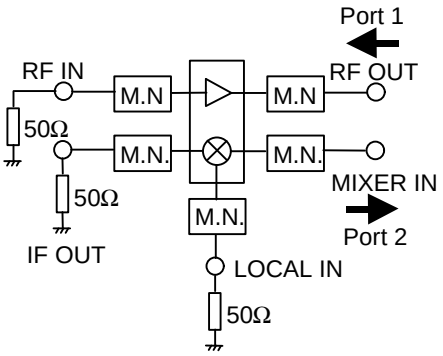

RF IN – IF OUT ISOLATION
(RF IN → IF OUT)

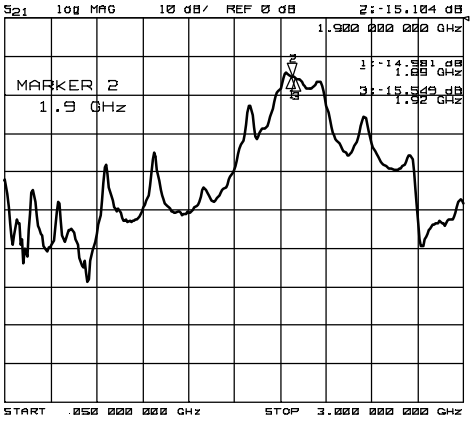

Condition
V_{LNA}=2.7V
V_{MIX}=V_{LO}=2.7V
Port1:RF IN
Port2:IF OUT

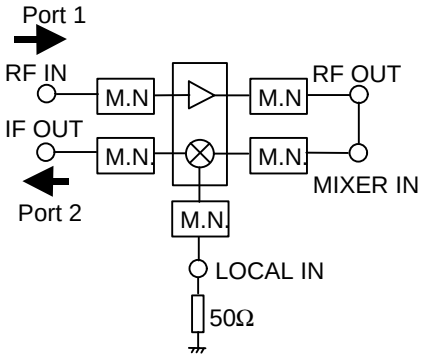

RF OUT – MIXER IN
Coaxial Cable
Z0=50 ohm, L=260 mm

■**TYPICAL CHARACTERISTICS 2** (LNA+MIXER, f=1.9GHz, f_{LO}=1660MHz, with test circuit 2)

LOCAL IN to IF OUT Isolation vs. LO Frequency

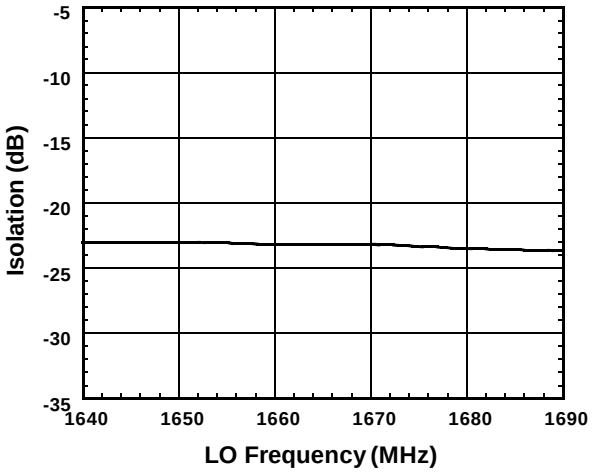

Condition
V_{LNA}=2.7V
V_{MIX}=V_{LO}=2.7V
P_{LO}=-15dBm
Port1: LOCAL IN
Port2: IF OUT

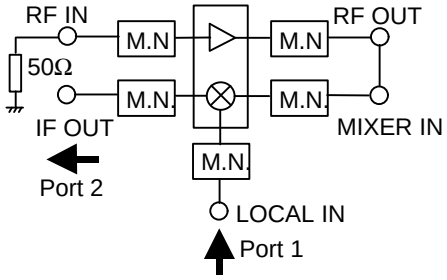

RF OUT – MIXER IN
Coaxial Cable
Z0=50 ohm, L=260 mm

LOCAL IN to RF IN Isolation vs. LO Frequency

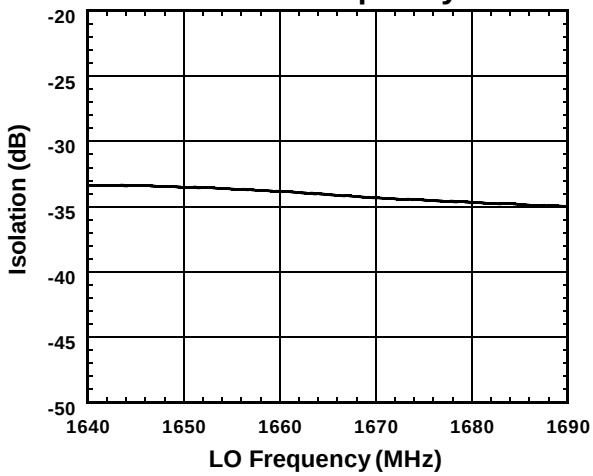

Condition
V_{LNA}=2.7V
V_{MIX}=V_{LO}=2.7V
P_{LO}=-15dBm
Port1: LOCAL IN
Port2: RF IN

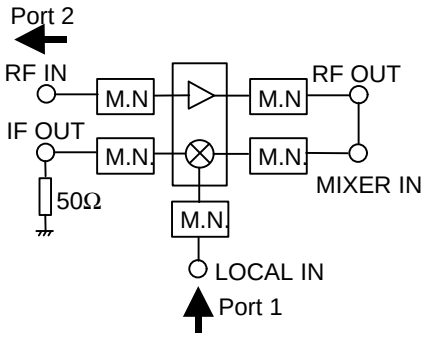

RF OUT – MIXER IN
Coaxial Cable
Z0=50 ohm, L=260 mm

■**TEST CIRCUIT 1** (1.5GHz BAND)

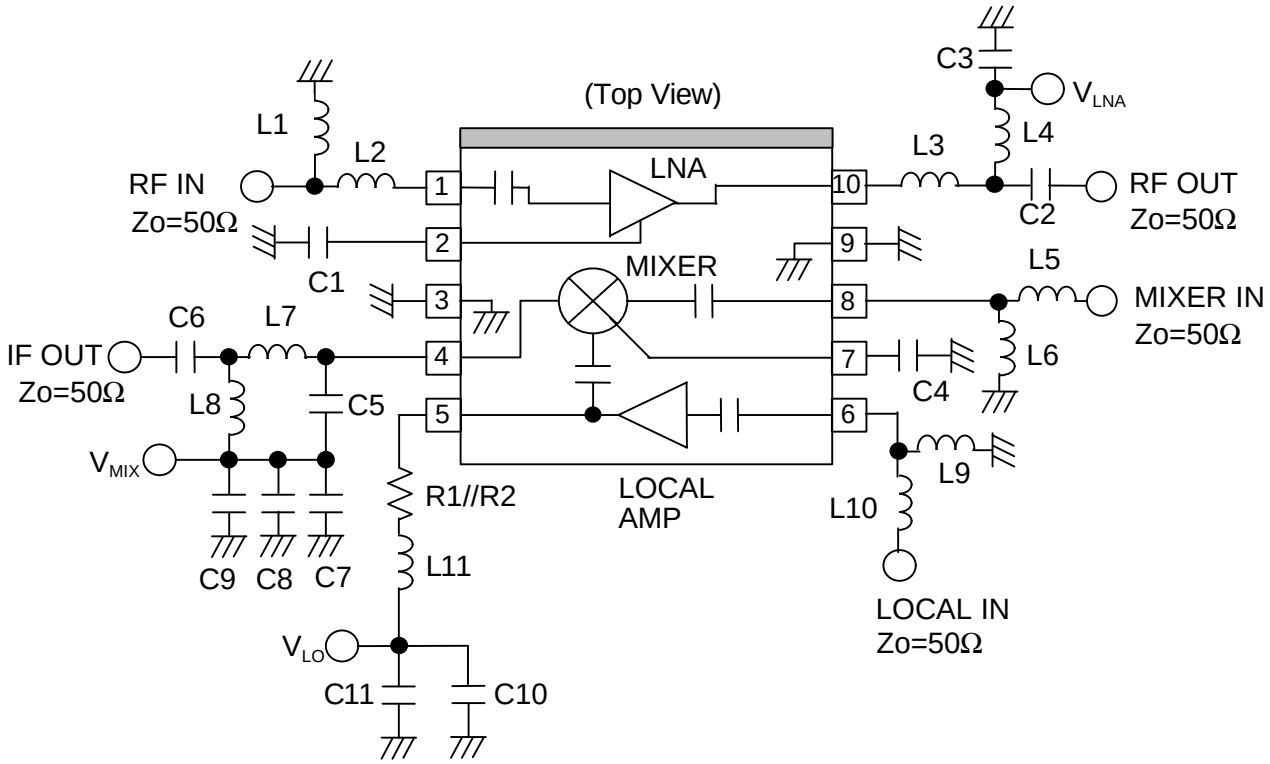

■**TEST CIRCUIT 2** (1.9GHz BAND)

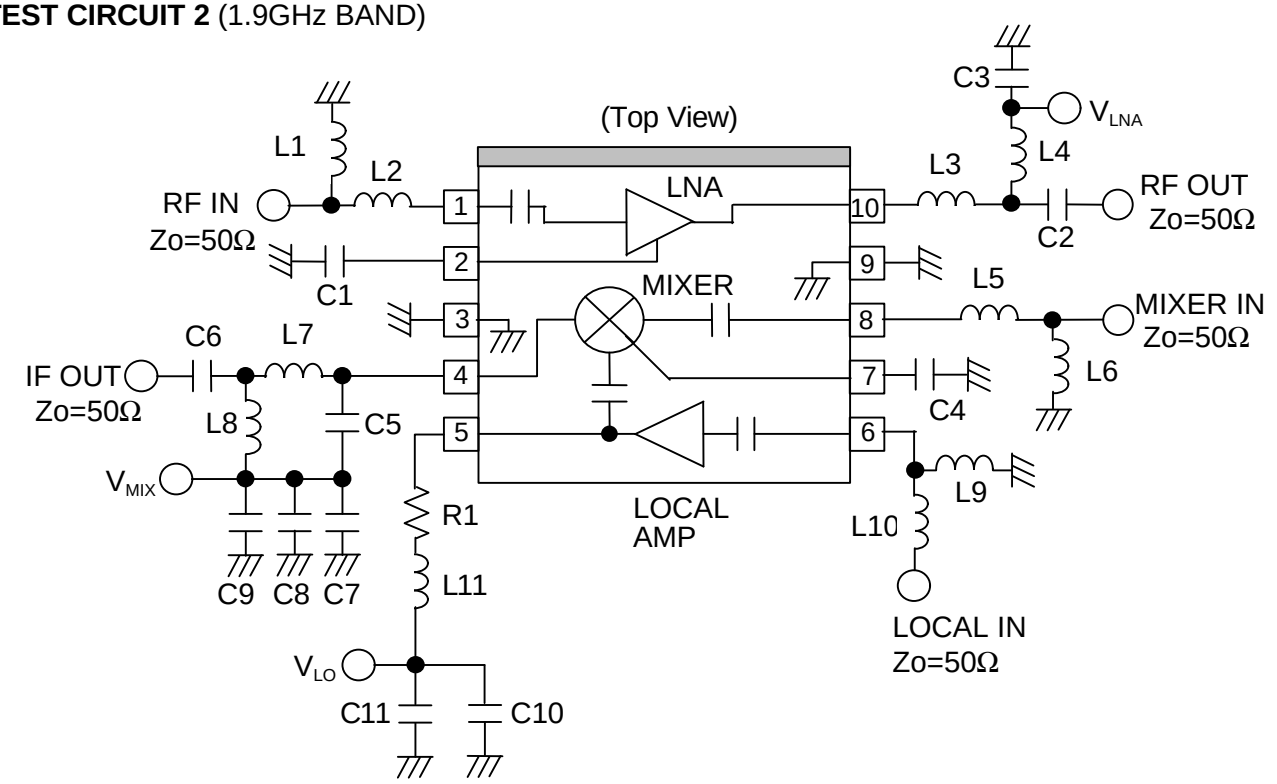

■TEST CIRCUIT

PARTS LIST

PART ID	1.5GHz BAND Upper LOCAL f_{LO}=1619MHz P_{LO}=-15dBm f_{IF}=130MHz	1.9GHz BAND Lower LOCAL f_{LO}=1660MHz P_{LO}=-15dBm f_{IF}=240MHz	COMMENT
L1	12nH	10nH	TAIYO-YUDEN (HK1005)
L2	12nH	6.8nH	TAIYO-YUDEN (HK1005)
L3	10nH	5.6nH	TAIYO-YUDEN (HK1005)
L4	2.7nH	1.5nH	TAIYO-YUDEN (HK1005)
L5	18nH	3.9nH	TAIYO-YUDEN (HK1005)
L6	15nH	1.2nH	TAIYO-YUDEN (HK1005)
L7	82nH	47nH	TAIYO-YUDEN (HK1608)
L8	33nH	18nH	TAIYO-YUDEN (HK1005)
L9	22nH	18nH	TAIYO-YUDEN (HK1005)
L10	15nH	18nH	TAIYO-YUDEN (HK1005)
L11	8.2nH	8.2nH	TAIYO-YUDEN (HK1005)
C1	30pF	7pF	MURATA (GRM36)
C2	39pF	12pF	MURATA (GRM36)
C3	1000pF	1000pF	MURATA (GRM36)
C4	1000pF	1000pF	MURATA (GRM36)
C5	12pF	6pF	MURATA (GRM36)
C6	1000pF	1000pF	MURATA (GRM36)
C7	10pF	10pF	MURATA (GRM36)
C8	100pF	100pF	MURATA (GRM36)
C9	1000pF	1000pF	MURATA (GRM36)
C10	10pF	10pF	MURATA (GRM36)
C11	100pF	100pF	MURATA (GRM36)
R1	18Ω	10Ω	CHIP SIZE 1005
R2	18Ω	-	CHIP SIZE 1005

■RECOMMENDED PCB DESIGN

(Top View)

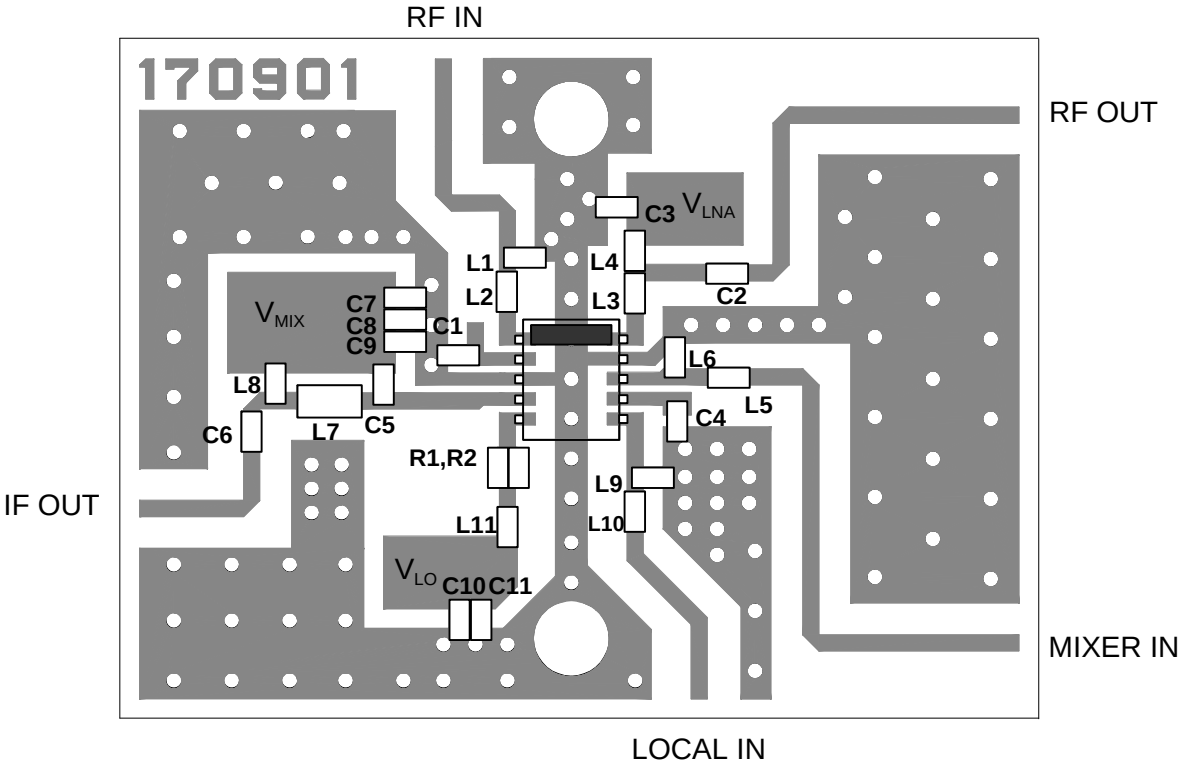

(1.5GHz BAND)

(Top View)

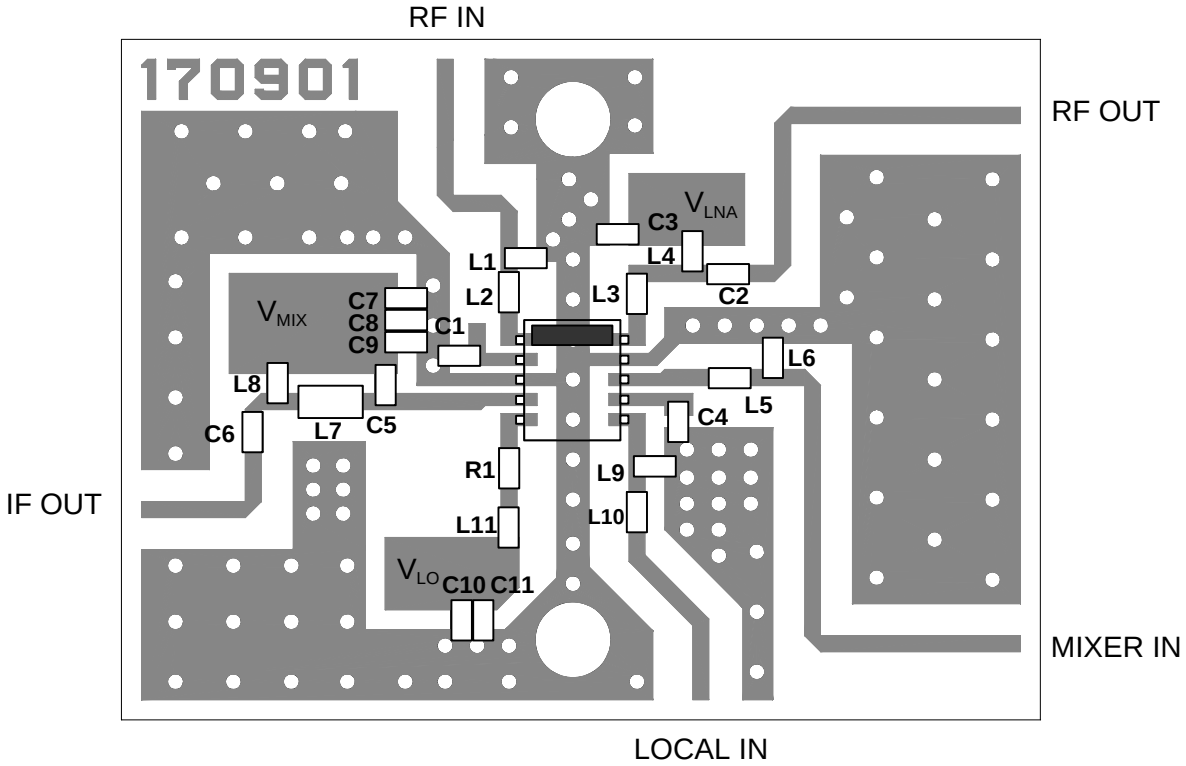

(1.9GHz BAND)

PCB (FR-4) : t = 0.2 mm
MICROSTRIP LINE WIDTH = 0.4 mm (Z_0 = 50Ω)
PCB SIZE = 23.0 x 17.0 mm

■MEASURING BLOCK DIAGRAM

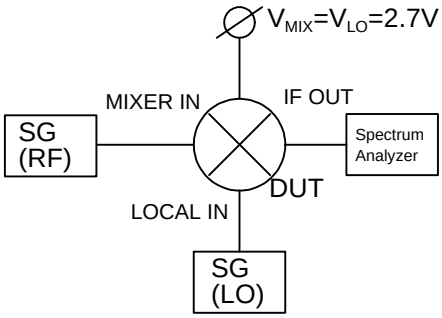

Conversion Gain Measuring Block Diagram

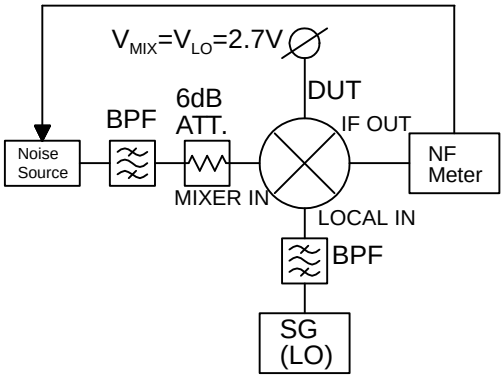

Noise Figure Measuring Block Diagram

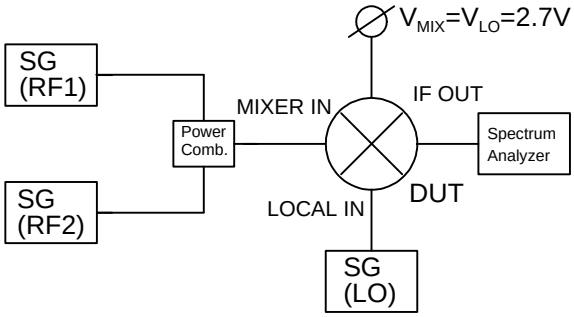

IF, IM3 Measuring Block Diagram

■PACKAGE OUTLINE (FLP10-C1)

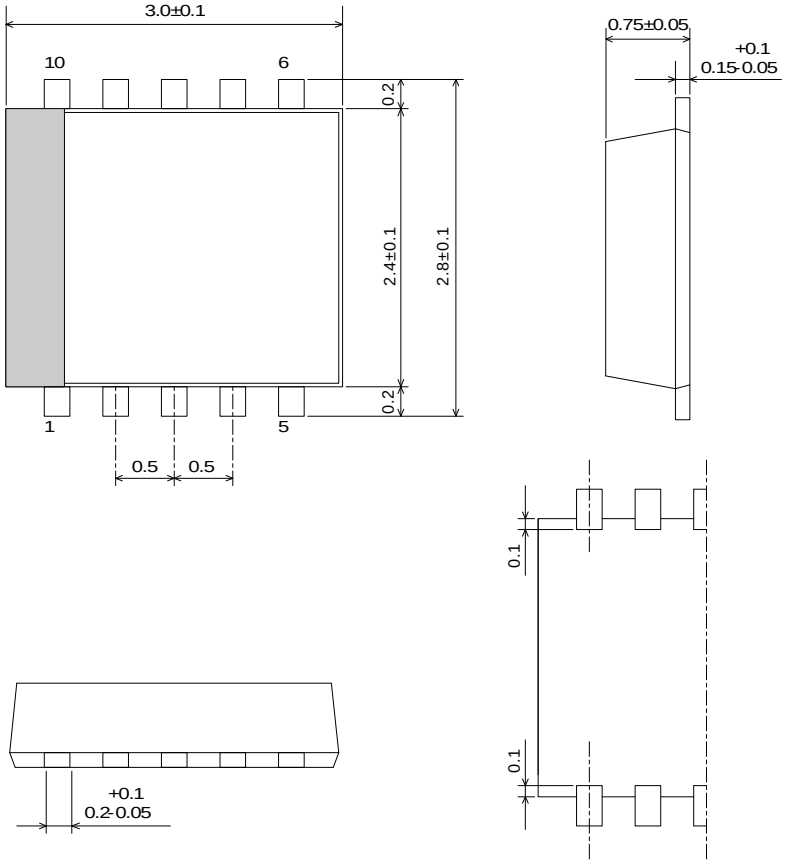

Lead material	: Copper
Lead surface finish	: Solder plating
Molding material	: Epoxy resin
UNIT	: mm
Weight	: 15mg

Cautions on using this product

This product contains Gallium-Arsenide (GaAs) which is a harmful material.

- Do NOT eat or put into mouth.
- Do NOT dispose in fire or break up this product.
- Do NOT chemically make gas or powder with this product.
- To waste this product, please obey the relating law of your country.

This product may be damaged with electric static discharge (ESD) or spike voltage. Please handle with care to avoid these damages.

[CAUTION]
The specifications on this databook are only given for information , without any guarantee as regards either mistakes or omissions. The application circuits in this databook are described only to show representative usages of the product and not intended for the guarantee or permission of any right including the industrial rights.

Мы молодая и активно развивающаяся компания в области поставок электронных компонентов. Мы поставляем электронные компоненты отечественного и импортного производства напрямую от производителей и с крупнейших складов мира.

Благодаря сотрудничеству с мировыми поставщиками мы осуществляем комплексные и плановые поставки широчайшего спектра электронных компонентов.

Собственная эффективная логистика и склад в обеспечивает надежную поставку продукции в точно указанные сроки по всей России.

Мы осуществляем техническую поддержку нашим клиентам и предпродажную проверку качества продукции. На все поставляемые продукты мы предоставляем гарантию .

Осуществляем поставки продукции под контролем ВП МО РФ на предприятия военно-промышленного комплекса России , а также работаем в рамках 275 ФЗ с открытием отдельных счетов в уполномоченном банке. Система менеджмента качества компании соответствует требованиям ГОСТ ISO 9001.

Минимальные сроки поставки, гибкие цены, неограниченный ассортимент и индивидуальный подход к клиентам являются основой для выстраивания долгосрочного и эффективного сотрудничества с предприятиями радиоэлектронной промышленности, предприятиями ВПК и научно-исследовательскими институтами России.

С нами вы становитесь еще успешнее!

Наши контакты:

Телефон: +7 812 627 14 35

Электронная почта: sales@st-electron.ru

Адрес: 198099, Санкт-Петербург, Промышленная ул, дом № 19, литера Н, помещение 100-Н Офис 331