CUSTOMER DRAWING	REVISED PER ECO-12-013789	REV: C	DATE: July 26, 2012

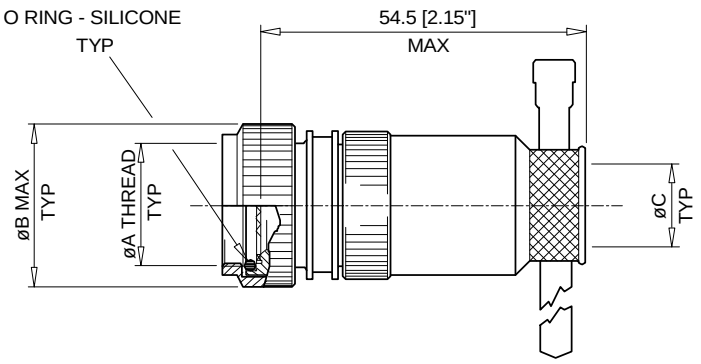

STRAIGHT ADAPTOR
-00

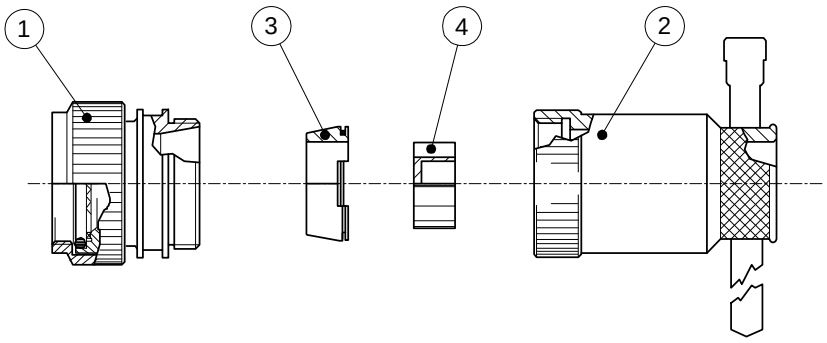

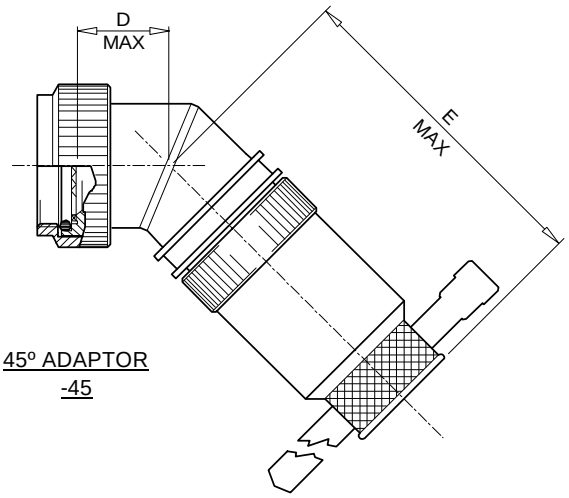

45º ADAPTOR
-45

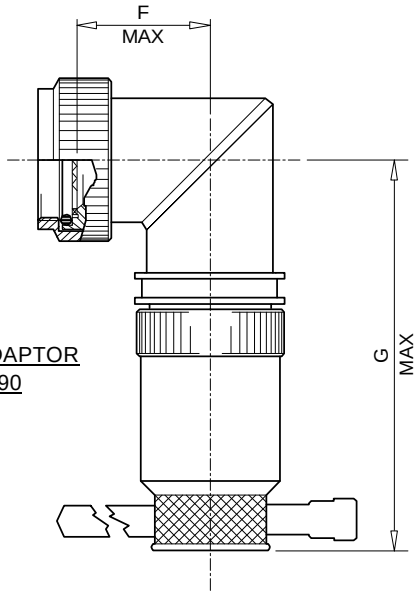

90º ADAPTOR
-90

© 2012 Tyco Electronics Corporation. All rights reserved.

TE connectivity	Raychem Wire and Harnessing Products 300 Constitution Drive Menlo Park, CA 94025 USA	TITLE: **HEXASHIELD ADAPTOR FOR CODE 40 CONNECTORS (BANDSTRAP CLAMPING NUT)**
UNLESS OTHERWISE SPECIFIED DIMENSIONS ARE IN MILLIMETERS. INCH DIMENSIONS ARE SHOWN IN BRACKETS	This drawing and the information set forth hereon is the property of Tyco Electronics and is to be held in trust and confidence. Publication, duplication, disclosure or use for any other purpose not expressly authorized in writing by Tyco Electronics is prohibited.	DOCUMENT NO. **HEX40-AY-YY-YY-AYY-3-YY**
DRAWN: CRJ / DATE: MAR 00	Tyco Electronics reserves the right to amend this drawing at any time. Users should evaluate the suitability of the product for their application.	FILE-UK: Hex40-3scd-us / SCALE: NONE / SHEET: 1 OF 4

If this document is printed it becomes uncontrolled. Check with the web for the latest revision.

KIT DESCRIPTION

ITEM	DESCRIPTION	MATERIAL
1	BODY ASSEMBLY	ALUMINIUM ALLOY
2	CLAMPING NUT ASSEMBLY – BANDSTRAP	ALUMINIUM ALLOY/STAINLESS STEEL
3	CONIC RING	ALUMINIUM ALLOY
4	STAR	ALUMINIUM ALLOY

TABLE OF DIMENSIONS

Order Number	Shell Size		ØA Thread Class 6H	ØB Max	ØC ±0.10 [±.004”]	D Max	E Max	F Max	G Max	Ferrule Quantity	
	Mil.	Com.								Std.	Opt.
09	A	09	M12 x 1	19.0 [0.75”]	8.00 [0.315”]	12.5 [0.49”]	55.5 [2.17”]	16.0 [0.63”]	57.0 [2.24”]	1	-
11	B	11	M15 x 1	22.0 [0.87”]	13.5 [0.531”]	13.0 [0.51”]	56.0 [2.20”]	17.5 [0.69”]	58.5 [2.30”]	2	-
13	C	13	M18 x 1	25.5 [1.00”]	15.00 [0.591”]	14.0 [0.55”]	56.5 [2.22”]	19.0 [0.75”]	61.5 [2.42”]	3	-
15	D	15	M22 x 1	30.5 [1.20”]	18.00 [0.709”]	14.5 [0.57”]	57.5 [2.26”]	20.5 [0.81”]	63.5 [2.50”]	5	-
17	E	17	M25 x 1	33.5 [1.32”]	21.00 [0.827”]	15.0 [0.59”]	58.0 [2.28”]	22.0 [0.87”]	65.0 [2.56”]	6	7
19	F	19	M28 x 1	37.0 [1.46”]	24.00 [0.945”]	15.5 [0.61”]	58.5 [2.30”]	23.5 [0.93”]	66.0 [2.60”]	7	8
21	G	21	M31 x 1	38.5 [1.52”]	27.00 [1.063”]	16.5 [0.65”]	59.0 [2.32”]	25.5 [1.00”]	67.5 [2.66”]	9	11
23	H	23	M34 x 1	42.0 [1.65”]	30.00 [1.181”]	17.0 [0.67”]	60.0 [2.36”]	27.0 [1.06”]	69.5 [2.74”]	10	13
25	J	25	M37 x 1	46.5 [1.83”]	33.00 [1.299”]	18.0 [0.71”]	61.0 [2.40”]	28.5 [1.12”]	71.0 [2.80”]	12	17

© 2012 Tyco Electronics Corporation. All rights reserved.

PART NUMBERING

HEX40 - A B - 00 - 21 - A9 - 3 - DS

- CONNECTOR CODE NUMBER
  HEX40 = MIL-C-38999 SERIES III AND IV
- MATERIAL CODE:
  A = ALUMINIUM ALLOY
- PLATING CODE:
  B = CADMIUM OLIVE DRAB TO QQ-P416
  C = ELECTROLESS NICKEL TO MIL-C-26074
- BODY STYLE
  00 = STRAIGHT
  45 = 45º
  90 = 90º
- ORDER NUMBER
- FERRULE QUANTITY CODE
- 3 = BANDSTRAP CLAMPING NUT
- DS = DRILLED STAR - OPTIONAL - SEE NOTE 2

APPLICATION

- These adaptors are designed to be mounted on the following connectors:

  MIL-C-38999 Series III and IV

- They are qualified to the Raychem specification RB-114, when installed on metallic Mil-Specification circular connectors only.
- They are designed primarily for open wire bundle installation having an overall braid, but are also designed to accept Raychem heat shrink moulded parts where strain relief is required – see illustration.

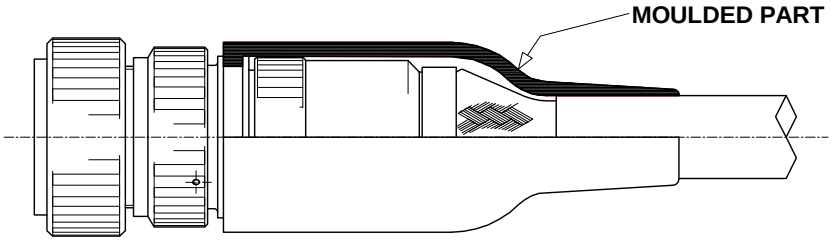

- Use in conjunction with the ferrules HET-A-***, which are purchased separately. Refer to HET-A-*** S.C.D. for relevant selection details.

© 2012 Tyco Electronics Corporation. All rights reserved.

TE connectivity	Raychem Wire and Harnessing Products 300 Constitution Drive Menlo Park, CA 94025 USA	TITLE: **HEXASHIELD ADAPTOR FOR CODE 40 CONNECTORS (BANDSTRAP CLAMPING NUT)**
UNLESS OTHERWISE SPECIFIED DIMENSIONS ARE IN MILLIMETERS. INCH DIMENSIONS ARE SHOWN IN BRACKETS	This drawing and the information set forth hereon is the property of Tyco Electronics and is to be held in trust and confidence. Publication, duplication, disclosure or use for any other purpose not expressly authorized in writing by Tyco Electronics is prohibited.	DOCUMENT NO. **HEX40-AY-YY-YY-AYY-3-YY**
DRAWN: CRJ / DATE: MAR 00	Tyco Electronics reserves the right to amend this drawing at any time. Users should evaluate the suitability of the product for their application.	FILE-UK: Hex40-3scd-us / SCALE: NONE / SHEET: 3 OF 4

If this document is printed it becomes uncontrolled. Check with the web for the latest revision.

INSTALLATION
- See Installation Procedure RPIP-696-04.

PACKAGING
- All components are supplied in a plastic bag.

NOTES!
1. Item 4 - Star - is **not** supplied with Hexashield Order Number 09.

2. The DS option, illustrated below, is for a Drilled Star that is available on sizes 15 to 25 only. This option is to allow unshielded wires to pass through the assembly.

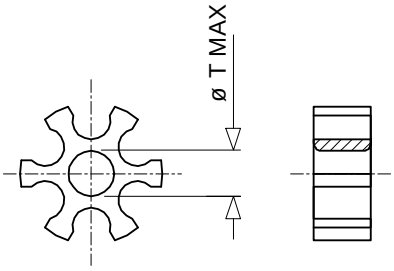

STAR SIZE	15	17	19	21	23	25
ØT MAX	3.5 [0.14”]	6.5 [0.26”]	9.5 [0.37”]	12.5 [0.48”]	15.5 [0.61”]	18.5 [0.73”]

3. Where the ferrule quantities required are standard, the item 4 - Star - is also standard.
   If the optional quantity is selected then 2 items 4 will be supplied - one “split” and the other one standard.
   See below for illustration.

EXAMPLE: FERRULE QUANTITY CODE -A13

-A13 = -A10 SPLIT STAR + -A3 STANDARD STAR

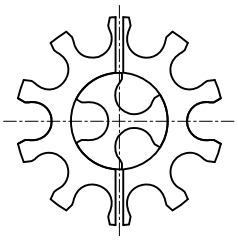

* On Order Number 19 only, the Optional Ferrule quantity of 8 uses a “standard” star also.

4. Assembly is to be permanently marked with Code Identity Number and Part Number.
   (e.g. 06090 HEX40-AB-00-21-A9-3)

© 2012 Tyco Electronics Corporation. All rights reserved.

TE connectivity	Raychem Wire and Harnessing Products 300 Constitution Drive Menlo Park, CA 94025 USA	TITLE: **HEXASHIELD ADAPTOR FOR CODE 40 CONNECTORS (BANDSTRAP CLAMPING NUT)**
UNLESS OTHERWISE SPECIFIED DIMENSIONS ARE IN MILLIMETERS. INCH DIMENSIONS ARE SHOWN IN BRACKETS	This drawing and the information set forth hereon is the property of Tyco Electronics and is to be held in trust and confidence. Publication, duplication, disclosure or use for any other purpose not expressly authorized in writing by Tyco Electronics is prohibited.	DOCUMENT NO. **HEX40-AY-YY-YY-AYY-3-YY**
DRAWN: CRJ / DATE: MAR 00	Tyco Electronics reserves the right to amend this drawing at any time. Users should evaluate the suitability of the product for their application.	FILE-UK: Hex40-3scd-us / SCALE: NONE / SHEET: 4 OF 4

If this document is printed it becomes uncontrolled. Check with the web for the latest revision.

Мы молодая и активно развивающаяся компания в области поставок электронных компонентов. Мы поставляем электронные компоненты отечественного и импортного производства напрямую от производителей и с крупнейших складов мира.

Благодаря сотрудничеству с мировыми поставщиками мы осуществляем комплексные и плановые поставки широчайшего спектра электронных компонентов.

Собственная эффективная логистика и склад в обеспечивает надежную поставку продукции в точно указанные сроки по всей России.

Мы осуществляем техническую поддержку нашим клиентам и предпродажную проверку качества продукции. На все поставляемые продукты мы предоставляем гарантию .

Осуществляем поставки продукции под контролем ВП МО РФ на предприятия военно-промышленного комплекса России , а также работаем в рамках 275 ФЗ с открытием отдельных счетов в уполномоченном банке. Система менеджмента качества компании соответствует требованиям ГОСТ ISO 9001.

Минимальные сроки поставки, гибкие цены, неограниченный ассортимент и индивидуальный подход к клиентам являются основой для выстраивания долгосрочного и эффективного сотрудничества с предприятиями радиоэлектронной промышленности, предприятиями ВПК и научно-исследовательскими институтами России.

С нами вы становитесь еще успешнее!

Наши контакты:

Телефон: +7 812 627 14 35

Электронная почта: sales@st-electron.ru

Адрес: 198099, Санкт-Петербург, Промышленная ул, дом № 19, литера Н, помещение 100-Н Офис 331