LED active cooling solutions.

ebmpapst

The engineer's choice

GREEN TECH

About ebm-papst.

Passionate about air technology and drive engineering.
The ebm-papst product portfolio now numbers over 14,500 products. Thus we offer the right solution for almost every air technology and drive engineering task. In addition, we work with you to develop very customized solutions that extend beyond our current product line. This is made possible by our extensive team of over 500 dedicated engineers and technicians out of our three central locations in Germany.

Global domestic.
In order to be specialist for customised solutions throughout the world, you need strong partners. Global Domestic – i.e. being present all over the world and being a national company in each individual country – is how we have established ourselves in all important markets on this globe with our successful subsidiaries. And so you will always find ebm-papst close to home, speaking your language, and knowing the demands of your markets. Besides, our worldwide production alliance serves as a basis for competitive pricing. Our global services and logistic outlets, i.e. IT networking, safeguard short reaction times and just-in-time delivery.

Core competencies: motor technology, aerodynamics and electronics.
Our innovative technologies keep turning into new industrial standards. Our advantage: We consider aerodynamic relationships as a whole. Thus we combine benchmark-setting motor technology with the intelligence of state-of-the-art electronics and aerodynamically optimized shapes. The system solution that results from these three core competencies has a synergy that is unique in all the world and make up the majority of our product line.

Passion, quality and responsibility: Three reasons for our success.
Only real passion for fans and motors makes the highest level of achievement possible. With a clear organizational structure, flat hierarchies and a high degree of personal responsibility, we create the perfect foundation – not only for technological innovation, but also for excellent service and active dedication to closely working with our customers.

Of course, our products are also produced with the highest quality – at a total of 18 production sites worldwide. Our quality management is uncompromising, everywhere and in every process stage. This is also confirmed by our certification of compliance with the international standards DIN EN ISO 9001, ISO/TS 16949-2 and the standard DIN EN ISO 14001.

Sustainability is at the centre of our thoughts and actions. Out of conviction.

Eco-friendliness and sustainability have always been at the core of our thoughts and actions. For decades, we have worked according to the simple but strict creed of our co-founder Gerhard Sturm: "Each new product we develop has to be better than the last one in terms of economy and ecology." GreenTech is the ultimate expression of our corporate philosophy.

GreenTech is pro-active development.
Even in the design phase, the materials and processes we use are optimised for the greatest possible eco-friendliness, energy balance and – wherever possible – recyclability. We continually improve the material and performance of our products, as well as the flow and noise characteristics. At the same time, we significantly reduce energy consumption. Close co-operation with universities and scientific institutes and the professorship we endow in the area of power engineering and regenerative energies allows us to profit from the latest research findings in these fields – and at the same time ensure highly qualified young academics.

GreenTech is eco-friendly production.
GreenTech also stands for maximum energy efficiency in our production processes. There, the intelligent use of industrial waste heat and groundwater cooling, photovoltaics and, of course, our own cooling and ventilation technology are of the utmost importance. Our most modern plant, for instance, consumes 91% less energy than currently specified and required. In this way, our products contribute to protecting the environment, from their origin to their recyclable packaging.

GreenTech is acknowledged and certified.
Every step in our chain of production meets the stringent standards of environmental specialists and the public. The Deutscher Nachhaltigkeitspreis 2012 (German Sustainability Award 2012), where we were given the Top3-award in the category "Germany's most sustainable strategy for the future (company group)" bears testimony to our commitment to sustainability, as does the DEKRA Award 2012 we received in the category "Umwelt – Herausforderung Energiewende / Environment – Challenge: Transition to more sustainable energy systems", to name only a few of a large number of examples. The environmental advantage gained in the performance of the products developed from our GreenTech philosophy can also be measured in the fulfillment of the most stringent energy and environmental standards. In many instances, our products are already well below the thresholds, energy legislation will impose a few years from now – several times over.

Our customers profit from this every day.
The heart of GreenTech is future-oriented EC technology from ebm-papst. The EC technology at the core of our most efficient motors and fans allows efficiency of up to 90 %, saves energy at a very high level, significantly extends service life and makes our products maintenance-free. These values pay off not only for the environment, but every cent also pays off for the user! All ebm-papst products – even those for which GreenTech EC technology does not (yet) make sense from an application viewpoint – feature the greatest possible connection of economy and ecology.

Market overview.

The LED market.
With high visible light, low radiant energy, and no infrared or ultraviolet light, LEDs are the most efficient light source in the lighting market today. While as much as 80 % more energy efficient than traditional incandescent lighting, LED components still create a considerable amount of heat. High temperatures can cut the lifespan of an LED light in half. Temperatures over the maximum rated junction can quickly weaken the lumen output and the color quality of LEDs.

By dissipating the heat emitted by the LED light source, the efficiency and length of life of the light source can increase exponentially. Thermal management is a key factor in lumen output. For high-lumen output applications, passive cooling is not enough. In order to reach the desired lumen values in a small form factor, active cooling is the perfect solution to effectively disperse the heat produced by LED components.

Active cooling solutions are a new contender in LED thermal management systems. Dissipating heat directly from the core of the modules allows for less thermal resistance, making the entire assembly more efficient. Active cooling technology offers thermal capabilities that are superior to passive heat sinks and can raise performance while significantly reducing the size of the lighting fixture. With industry-leading German-engineered compact fans, ebm-papst can provide the perfect cooling solution for your LED application. One of the most significant advantages that ebm-papst fans have on the life of the LED light is due to the reliability of our products. With active cooling solutions far surpassing the 50,000+ hour promise the industry is accustomed to, an ebm-papst fan is now the LED light's most efficient cooling source.

	Series	Dimensions	Temperature range	Life expectancy
Type		**mm**	**°C**	**Hours**
Axial	400, 400F	□ 40 x 10/20	–20 ... +85	120,000/90,000
	500F	□ 50 x 15	–20 ... +85	120,000
	600F, 620	□ 60 x 15/25	–20 ... +85	120,000/305,000
	8200J, 8400N, 8450	□ 80 x 38/25	–20 ... +70	237,500/305,000/305,000
	3200J, 3400N	□ 92 x 38/25	–20 ... +70	265,000/305,000
	4100N, 4300, 4400F	□ 119 x 38/32/25	–20 ... +75	305,000/322,500/285,000
Radial	RLF35	□ 51 x 15	–20 ... +70	227,500
	RL48	□ 76 x 27	–20 ... +70	265,000
	RL65	□ 97 x 93.5 x 33	–20 ... +70	227,500

Note: Life Expectancy L_{10} per IPC 9591 at 20 °C ambient. Values are up to; depending on speed and application.

LED active cooling solutions.

Active cooling concepts for LEDs.

Thermal management has a considerable influence on the light output and efficiency of LED lights. Although LED lights and LED modules are up to 80 % more energy efficient than conventional bulbs, a great deal of heat builds up in a small concentrated area in the LED module. The quality and service life of LED lights are drastically reduced if the heat is not reliably discharged. The heat generated has to be dissipated to avoid this problem. Alongside passive cooling methods involving the use of bulky heat sinks with their limited potential in confined spaces, active cooling concepts offer major advantages and have a positive effect on output as well as saving space and enabling the desired service life to be achieved.

Benefits of using ebm-papst active cooling solutions.

- Approved reference design through Xicato
- Life expectancy: in excess of 87,500 hours at ambient temperatures up to 40 °C
- Industry leading high reliability: up to 5 year warranty on the 612FL-698 fan modules (PG1W-12-60-M3BN and PG1W-12-60-L3BN)
- 100 % end of line testing
- Low noise: Custom acoustic isolation ring
  - Fan runs at 7dB(A)
  - A quiet office has a background noise of about 40 dB(A)
- High efficiency motor design
- Electrical input requires less than 0.18 Watts
- Thermal protection: thermal isolation ring

PG1W-12-60-M3BN

PG1W-12-60-L3BN

Nominal data	Nominal voltage	Voltage range	Acoustic noise	Fan-sink thermal resistance (at 50 °C)	Thermal power dissipation capability	Thermal class according to Xicato (at 40 °C ambient temperature)	Fan speed	Heat sink mass	Power input	Life expectancy (at 20 °C)	Life expectancy (at 40 °C)
Type	**VDC**	**VDC**	**dB(A)**	**°C/W**	**W**		**rpm**	**g**	**W**	**hrs**	**hrs**
PG1W-12-60-M3BN	12	11.5 ... 13.2	7	1.32	38	Q	1,700	212	0.18	197,500	87,500
PG1W-12-60-L3BN	12	11.5 ... 13.2	7	0.94	53	U	1,700	276	0.18	197,500	87,500

Note: Life Expectancy L_{10} per IPC 9591.

Technical data.

PG1W-12-60-M3BN

Note: mounting options on both sides of modul PG1W-12-60-M3BN are available on request (see assembly mounting option).

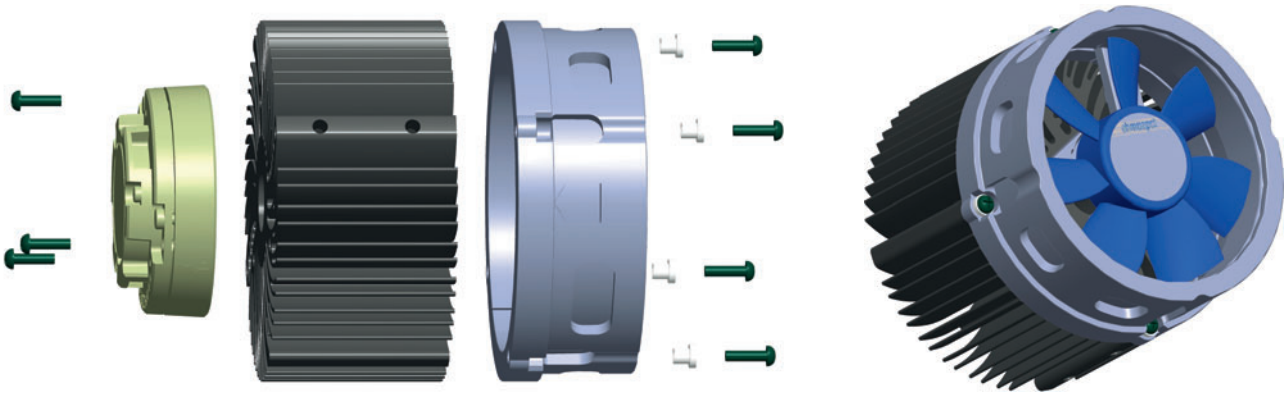

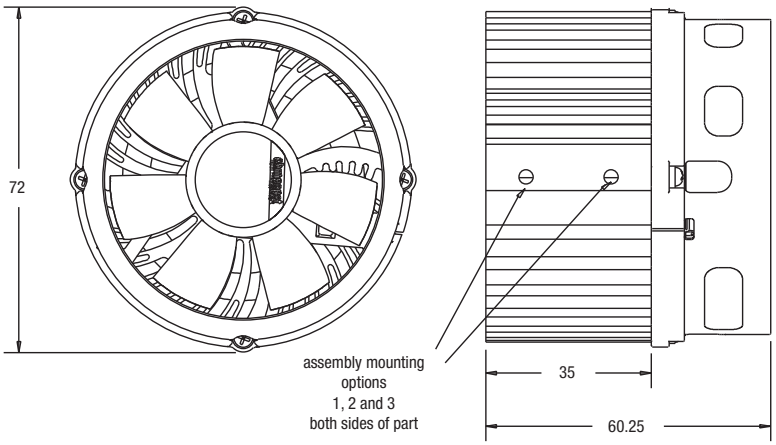

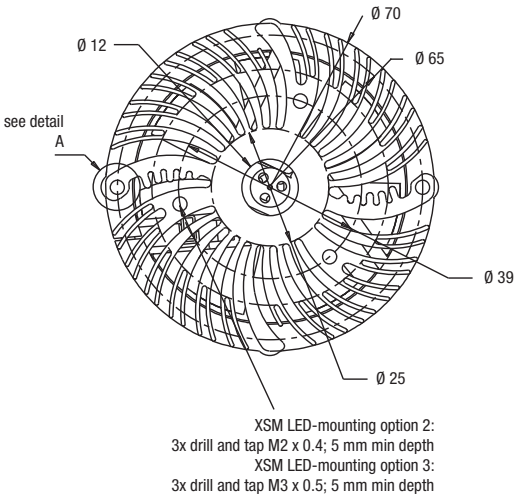

ebm-papst Part Number
PG1W-12-60- X X X X

HEAT SINK ASSEMBLY
"M" - XSA-48 style
"L" - XLA-18 style

MOUNTING FOR LED-MODULE
"2" - M2 Mounting Hole
"3" - M3 Mounting Hole

ASSEMBLY MOUNTING OPTION
See Table

FINISH
"B" - Black Anodize
"C" - Clear Anodize

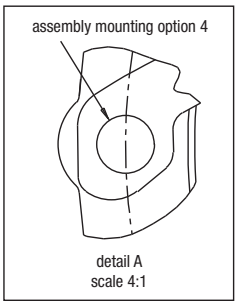

ASSEMBLY MOUNTING OPTIONS TABLE		
MOUNTING OPTION	THREAD	THREAD DEPTH
N	No additional mounting options	
1	M2 X 0.4	5 mm MIN.
2	M3 X 0.5	5 mm MIN.
3	# 6-32 UNC	0.2" MIN.
4	M3 X 0.5	5 mm MIN.
5	Option 1 & 4	
6	Option 2 & 4	
7	Option 3 & 4	

Technical data.

PG1W-12-60-L3BN

Note: mounting options on near and farside of modul PG1W-12-60-L3BN are available on request (see assembly mounting option).

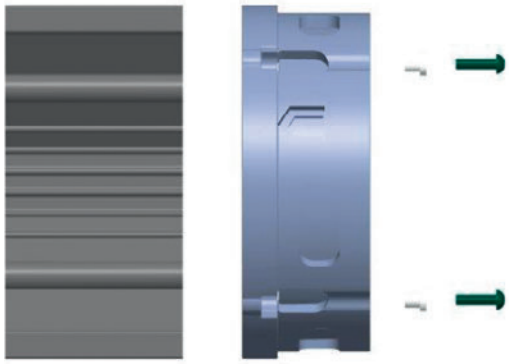

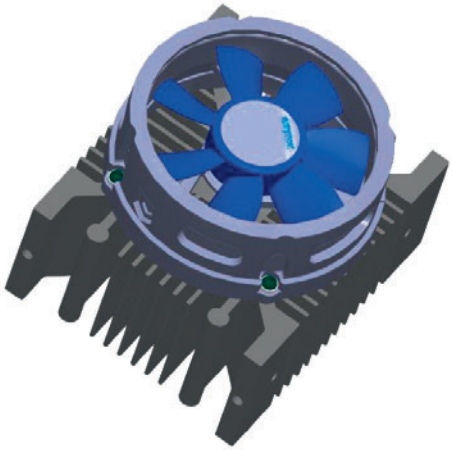

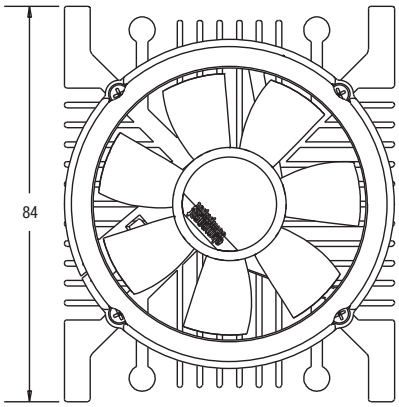

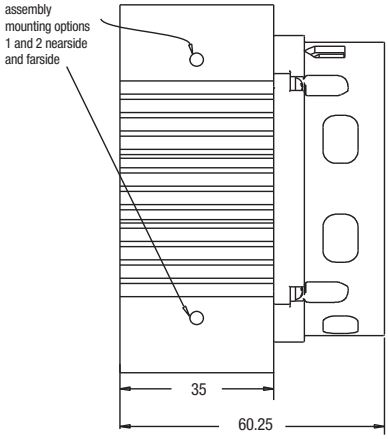

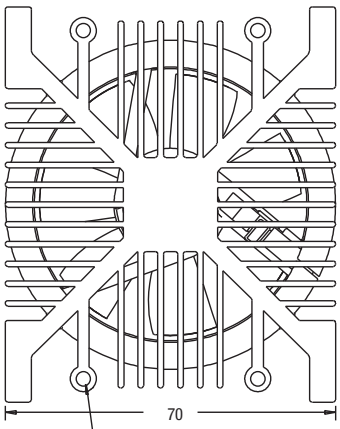

(LED-module side of assembly)
4x drill and tap M3 x 0.5
6.5 mm min thread depth
Standard on all assemblies

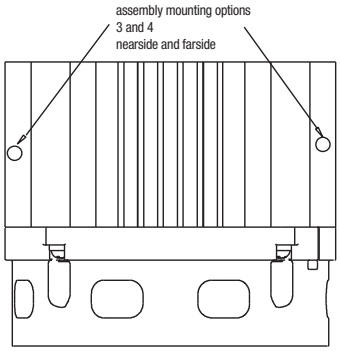

ASSEMBLY MOUNTING OPTIONS TABLE

MOUNTING OPTION	THREAD	THREAD DEPTH
N	No additional mounting options	
1	M3 X 0.5	6.5 mm MIN.
2	# 6-32 UNC	0.25" MIN.
3	M3 X 0.5	6.5 mm MIN.
4	# 6-32 UNC	0.25" MIN.
5	Options 1 & 3	
6	Options 2 & 4	

ebm-papst Part Number
PG1W-12-60- X X X X

HEAT SINK ASSEMBLY
"M" - XSA-48 style
"L" - XLA-18 style

MOUNTING FOR LED
"3" - M3 Mounting Hole

ASSEMBLY MOUNTING OPTION
See Table

FINISH
"B" - Black Anodize
"C" - Clear Anodize

37909-7-8811 · 2013-11 · WO-1'

ebm-papst
St. Georgen GmbH & Co. KG

Hermann-Papst-Straße 1
78112 St. Georgen
Germany
Phone +49 7724 81-0
Fax +49 7724 81-1309
info2@de.ebmpapst.com

ebmpapst

The engineer's choice

Мы молодая и активно развивающаяся компания в области поставок электронных компонентов. Мы поставляем электронные компоненты отечественного и импортного производства напрямую от производителей и с крупнейших складов мира.

Благодаря сотрудничеству с мировыми поставщиками мы осуществляем комплексные и плановые поставки широчайшего спектра электронных компонентов.

Собственная эффективная логистика и склад в обеспечивает надежную поставку продукции в точно указанные сроки по всей России.

Мы осуществляем техническую поддержку нашим клиентам и предпродажную проверку качества продукции. На все поставляемые продукты мы предоставляем гарантию .

Осуществляем поставки продукции под контролем ВП МО РФ на предприятия военно-промышленного комплекса России , а также работаем в рамках 275 ФЗ с открытием отдельных счетов в уполномоченном банке. Система менеджмента качества компании соответствует требованиям ГОСТ ISO 9001.

Минимальные сроки поставки, гибкие цены, неограниченный ассортимент и индивидуальный подход к клиентам являются основой для выстраивания долгосрочного и эффективного сотрудничества с предприятиями радиоэлектронной промышленности, предприятиями ВПК и научно-исследовательскими институтами России.

С нами вы становитесь еще успешнее!

Наши контакты:

Телефон: +7 812 627 14 35

Электронная почта: sales@st-electron.ru

Адрес: 198099, Санкт-Петербург, Промышленная ул, дом № 19, литера Н, помещение 100-Н Офис 331