FAIRCHILD™

Is Now Part of

ON Semiconductor®

To learn more about ON Semiconductor, please visit our website at
www.onsemi.com

Please note: As part of the Fairchild Semiconductor integration, some of the Fairchild orderable part numbers will need to change in order to meet ON Semiconductor's system requirements. Since the ON Semiconductor product management systems do not have the ability to manage part nomenclature that utilizes an underscore (_), the underscore (_) in the Fairchild part numbers will be changed to a dash (-). This document may contain device numbers with an underscore (_). Please check the ON Semiconductor website to verify the updated device numbers. The most current and up-to-date ordering information can be found at www.onsemi.com. Please email any questions regarding the system integration to Fairchild_questions@onsemi.com.

ON Semiconductor and the ON Semiconductor logo are trademarks of Semiconductor Components Industries, LLC dba ON Semiconductor or its subsidiaries in the United States and/or other countries. ON Semiconductor owns the rights to a number of patents, trademarks, copyrights, trade secrets, and other intellectual property. A listing of ON Semiconductor's product/patent coverage may be accessed at www.onsemi.com/site/pdf/Patent-Marking.pdf. ON Semiconductor reserves the right to make changes without further notice to any products herein. ON Semiconductor makes no warranty, representation or guarantee regarding the suitability of its products for any particular purpose, nor does ON Semiconductor assume any liability arising out of the application or use of any product or circuit, and specifically disclaims any and all liability, including without limitation special, consequential or incidental damages. Buyer is responsible for its products and applications using ON Semiconductor products, including compliance with all laws, regulations and safety requirements or standards, regardless of any support or applications information provided by ON Semiconductor. "Typical" parameters which may be provided in ON Semiconductor data sheets and/or specifications can and do vary in different applications and actual performance may vary over time. All operating parameters, including "Typicals" must be validated for each customer application by customer's technical experts. ON Semiconductor does not convey any license under its patent rights nor the rights of others. ON Semiconductor products are not designed, intended, or authorized for use as a critical component in life support systems or any FDA Class 3 medical devices or medical devices with a same or similar classification in a foreign jurisdiction or any devices intended for implantation in the human body. Should Buyer purchase or use ON Semiconductor products for any such unintended or unauthorized application, Buyer shall indemnify and hold ON Semiconductor and its officers, employees, subsidiaries, affiliates, and distributors harmless against all claims, costs, damages, and expenses, and reasonable attorney fees arising out of, directly or indirectly, any claim of personal injury or death associated with such unintended or unauthorized use, even if such claim alleges that ON Semiconductor was negligent regarding the design or manufacture of the part. ON Semiconductor is an Equal Opportunity/Affirmative Action Employer. This literature is subject to all applicable copyright laws and is not for resale in any manner.

February 2011

FOD3182
3A Output Current, High Speed MOSFET Gate Driver Optocoupler

Features

- High noise immunity characterized by 50kV/µs (Typ.) common mode rejection @ V_{CM} = 2,000V
- Guaranteed operating temperature range of -40°C to +100°C
- 3A peak output current
- Fast switching speed
  - 210ns max. propagation delay
  - 65ns max pulse width distortion
- Fast output rise/fall time
  - Offers lower dynamic power dissipation
- 250kHz maximum switching speed
- Wide V_{DD} operating range: 10V to 30V
- Use of P-Channel MOSFETs at output stage enables output voltage swing close to the supply rail (rail-to-rail output)
- 5000Vrms, 1 minute isolation
- Under voltage lockout protection (UVLO) with hysteresis – optimized for driving MOSFETs
- Minimum creepage distance of 8.0mm
- Minimum clearance distance of 10mm to 16mm (option TV or TSV)
- Minimum insulation thickness of 0.5mm
- UL and VDE*
- 1,414 peak working insulation voltage (V_{IORM})

*Requires 'V' ordering option

Applications

- Plasma Display Panel
- High performance DC/DC convertor
- High performance switch mode power supply
- High performance uninterruptible power supply
- Isolated Power MOSFET gate drive

Description

The FOD3182 is a 3A Output Current, High Speed MOSFET Gate Drive Optocoupler. It consists of a aluminium gallium arsenide (AlGaAs) light emitting diode optically coupled to a CMOS detector with PMOS and NMOS output power transistors integrated circuit power stage. It is ideally suited for high frequency driving of power MOSFETS used in Plasma Display Panels (PDPs), motor control inverter applications and high performance DC/DC converters.

The device is packaged in an 8-pin dual in-line housing compatible with 260°C reflow processes for lead free solder compliance.

Functional Block Diagram

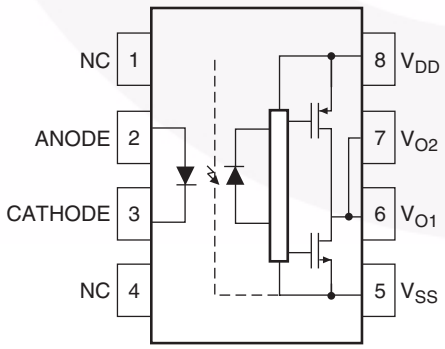

Note:
A 0.1µF bypass capacitor must be connected between pins 5 and 8.

Package Outlines

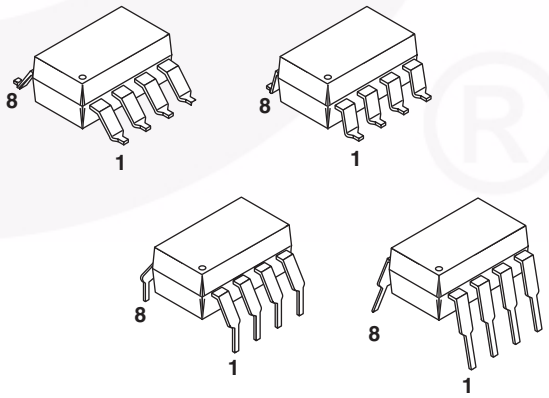

Truth Table

LED	$V_{DD} - V_{SS}$ "Positive Going" (Turn-on)	$V_{DD} - V_{SS}$ "Negative Going" (Turn-off)	V_O
Off	0V to 30V	0V to 30V	Low
On	0V to 7.4V	0V to 7V	Low
On	7.4V to 9V	7V to 8.5V	Transition
On	9V to 30V	8.5V to 30V	High

Pin Definitions

Pin #	Name	Description
1	NC	Not Connected
2	Anode	LED Anode
3	Cathode	LED Cathode
4	NC	Not Connected
5	V_{SS}	Negative Supply Voltage
6	V_{O2}	Output Voltage 2 (internally connected to V_{O1})
7	V_{O1}	Output Voltage 1
8	V_{DD}	Positive Supply Voltage

Safety and Insulation Ratings

As per DIN EN/IEC 60747-5-2. This optocoupler is suitable for “safe electrical insulation” only within the safety limit data. Compliance with the safety ratings shall be ensured by means of protective circuits.

Symbol	Parameter	Min.	Typ.	Max.	Unit
	Installation Classifications per DIN VDE 0110/1.89 Table 1				
	For Rated Mains Voltage < 150Vrms		I–IV		
	For Rated Mains Voltage < 300Vrms		I–IV		
	For Rated Mains Voltage < 450Vrms		I–III		
	For Rated Mains Voltage < 600Vrms		I–III		
	For Rated Mains Voltage < 1000Vrms (Option T, TS)		I–III		
	Climatic Classification		40/100/21		
	Pollution Degree (DIN VDE 0110/1.89)		2		
CTI	Comparative Tracking Index	175			
V_{PR}	Input to Output Test Voltage, Method b, V_{IORM} x 1.875 = V_{PR}, 100% Production Test with tm = 1 sec., Partial Discharge < 5pC	2651			
	Input to Output Test Voltage, Method a, V_{IORM} x 1.5 = V_{PR}, Type and Sample Test with tm = 60 sec.,Partial Discharge < 5 pC	2121			
V_{IORM}	Max Working Insulation Voltage	1,414			V_{peak}
V_{IOTM}	Highest Allowable Over Voltage	6000			V_{peak}
	External Creepage	8			mm
	External Clearance	7.4			mm
	External Clearance (for Option T or TS - 0.4” Lead Spacing)	10.16			mm
	Insulation Thickness	0.5			mm
	Safety Limit Values – Maximum Values Allowed in the Event of a Failure				
T_{Case}	Case Temperature	150			°C
$I_{S,INPUT}$	Input Current	25			mA
$P_{S,OUTPUT}$	Output Power (Duty Factor ≤ 2.7%)	250			mW
R_{IO}	Insulation Resistance at T_S, V_{IO} = 500V	10^9			Ω

Absolute Maximum Ratings (T_A = 25°C unless otherwise specified)

Stresses exceeding the absolute maximum ratings may damage the device. The device may not function or be operable above the recommended operating conditions and stressing the parts to these levels is not recommended. In addition, extended exposure to stresses above the recommended operating conditions may affect device reliability. The absolute maximum ratings are stress ratings only.

Symbol	Parameter	Value	Units
T_{STG}	Storage Temperature	-40 to +125	°C
T_{OPR}	Operating Temperature	-40 to +100	°C
T_J	Junction Temperature	-40 to +125	°C
T_{SOL}	Lead Solder Temperature – Wave solder (Refer to Reflow Temperature Profile, pg. 22)	260 for 10 sec.	°C
$I_{F(AVG)}$	Average Input Current(1)	25	mA
$I_{F(tr, tf)}$	LED Current Minimum Rate of Rise/Fall	250	ns
V_R	Reverse Input Voltage	5	V
$I_{OH(PEAK)}$	“High” Peak Output Current(2)	3	A
$I_{OL(PEAK)}$	“Low” Peak Output Current(2)	3	A
$V_{DD} – V_{SS}$	Supply Voltage	-0.5 to 35	V
$V_{O(PEAK)}$	Output Voltage	0 to V_{DD}	V
P_O	Output Power Dissipation(4)	250	mW
P_D	Total Power Dissipation(5)	295	mW

Recommended Operating Conditions

The Recommended Operating Conditions table defines the conditions for actual device operation. Recommended operating conditions are specified to ensure optimal performance to the datasheet specifications. Fairchild does not recommend exceeding them or designing to absolute maximum ratings.

Symbol	Parameter	Value	Units
$V_{DD} – V_{SS}$	Power Supply	10 to 30	V
$I_{F(ON)}$	Input Current (ON)	10 to 16	mA
$V_{F(OFF)}$	Input Voltage (OFF)	-3.0 to 0.8	V

Electrical-Optical Characteristics (DC)

Apply over all recommended conditions, typical value is measured at V_{DD} = 30V, V_{SS} = 0V, T_A = 25°C, unless otherwise specified.

Symbol	Parameter	Test Conditions	Min.	Typ.	Max.	Unit
I_{OH}	High Level Output Current	$V_{OH} = (V_{DD} – V_{SS} – 1V)$	0.5	0.9		A
		$V_{OH} = (V_{DD} – V_{SS} – 6V)$	2.5			
I_{OL}	Low Level Output Current	$V_{OL} = (V_{DD} – V_{SS} + 1V)$	0.5	1		A
		$V_{OL} = (V_{DD} – V_{SS} + 6V)$	2.5			
V_{OH}	High Level Output Voltage(5)(6)	I_O = -100mA	V_{DD} – 0.5			V
V_{OL}	Low Level Output Voltage(5)(6)	I_O = 100mA			V_{SS} + 0.5	V
I_{DDH}	High Level Supply Current	Output Open, I_F = 10 to 16mA		2.6	4.0	mA
I_{DDL}	Low Level Supply Current	Output Open, V_F = -3.0 to 0.8V		2.5	4.0	mA
I_{FLH}	Threshold Input Current Low to High	I_O = 0mA, V_O > 5V		3.0	7.5	mA
V_{FHL}	Threshold Input Voltage High to Low	I_O = 0mA, V_O < 5V	0.8			V
V_F	Input Forward Voltage	I_F = 10mA	1.1	1.43	1.8	V
$\Delta V_F / T_A$	Temperature Coefficient of Forward Voltage	I_F = 10mA		-1.5		mV/°C
V_{UVLO+}	UVLO Threshold	V_O > 5V, I_F = 10mA	7	8.3	9	V
$V_{UVLO–}$		V_O < 5V, I_F = 10mA	6.5	7.7	8.5	V
$UVLO_{HYST}$	UVLO Hysteresis			0.6		V
BV_R	Input Reverse Breakdown Voltage	I_R = 10µA	5			V
C_{IN}	Input Capacitance	f = 1MHz, V_F = 0V		25		pF

Switching Characteristics

Apply over all recommended conditions, typical value is measured at V_{DD} = 30V, V_{SS} = 0V, T_A = 25°C, unless otherwise specified.

Symbol	Parameter	Test Conditions	Min.	Typ.	Max.	Unit
t_{PLH}	Propagation Delay Time to High Output Level(7)	I_F = 10mA, R_g = 10Ω, f = 250kHz, Duty Cycle = 50%, C_g = 10nF	50	120	210	ns
t_{PHL}	Propagation Delay Time to Low Output Level(7)		50	145	210	ns
P_{WD}	Pulse Width Distortion(8)			35	65	ns
P_{DD} ($t_{PHL} – t_{PLH}$)	Propagation Delay Difference Between Any Two Parts(9)		-90		90	ns
t_r	Rise Time	C_L = 10nF, R_g = 10Ω		38		ns
t_f	Fall Time			24		ns
$t_{UVLO\ ON}$	UVLO Turn On Delay			2.0		µs
$t_{UVLO\ OFF}$	UVLO Turn Off Delay			0.3		µs
$\lvert CM_H \rvert$	Output High Level Common Mode Transient Immunity(10) (11)	T_A = +25°C, I_f = 7mA to 16mA, V_{CM} = 2kV, V_{DD} = 30V	35	50		kV/µs
$\lvert CM_L \rvert$	Output Low Level Common Mode Transient Immunity(10) (12)	T_A = +25°C, V_f = 0V, V_{CM} = 2kV, V_{DD} = 30V	35	50		kV/µs

Isolation Characteristics

Symbol	Parameter	Test Conditions	Min.	Typ.*	Max.	Unit
V_{ISO}	Withstand Isolation Voltage(13) (14)	T_A = 25°C, R.H. < 50%, t = 1min., I_{I-O} ≤ 10µA	5000			V_{rms}
R_{I-O}	Resistance (input to output)(14)	V_{I-O} = 500V		10^{11}		Ω
C_{I-O}	Capacitance (input to output)	Freq. = 1MHz		1		pF

*Typical values at T_A = 25°C

Notes:

1. Derate linearly above +79°C free air temperature at a rate of 0.37mA/°C.
2. Maximum pulse width = 10µs, maximum duty cycle = 11%.
3 Derate linearly above +79°C, free air temperature at the rate of 5.73mW/°C.
4. No derating required across operating temperature range.
5. In this test, V_{OH} is measured with a dc load current of 100mA. When driving capacitive load V_{OH} will approach V_{DD} as I_{OH} approaches zero amps.
6. Maximum pulse width = 1ms, maximum duty cycle = 20%.
7. t_{PHL} propagation delay is measured from the 50% level on the falling edge of the input pulse to the 50% level of the falling edge of the V_O signal. t_{PLH} propagation delay is measured from the 50% level on the rising edge of the input pulse to the 50% level of the rising edge of the V_O signal.
8. PWD is defined as $| t_{PHL} – t_{PLH} |$ for any given device.
8. The difference between t_{PHL} and t_{PLH} between any two FOD3182 parts under same operating conditions, with equal loads.
10. Pin 1 and 4 need to be connected to LED common.
11. Common mode transient immunity in the high state is the maximum tolerable dV_{CM}/dt of the common mode pulse V_{CM} to assure that the output will remain in the high state (i.e. $V_O > 15V$).
12. Common mode transient immunity in a low state is the maximum tolerable dV_{CM}/dt of the common mode pulse, V_{CM}, to assure that the output will remain in a low state (i.e. $V_O < 1.0V$).
13. In accordance with UL 1577, each optocoupler is proof tested by applying an insulation test voltage > 6000Vrms, 60Hz for 1 second (leakage detection current limit $I_{I-O} < 10µA$).
14. Device considered a two-terminal device: pins on input side shorted together and pins on output side shorted together.

Typical Performance Curves

Fig. 1 Output High Voltage Drop vs. Output High Current

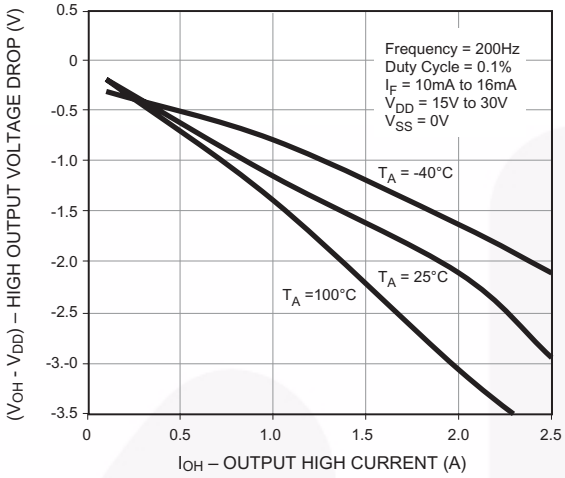

Fig. 2 Output High Voltage Drop vs. Ambient Temperature

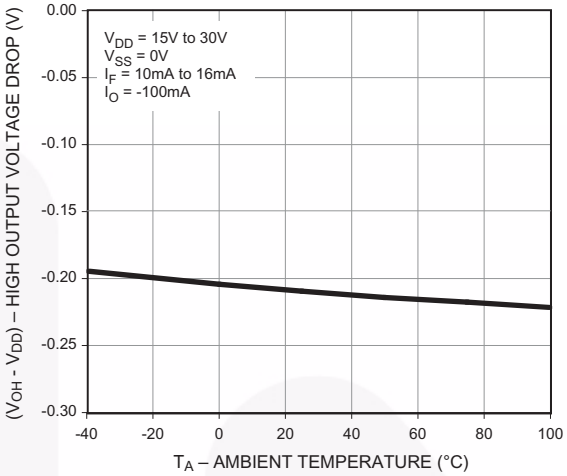

Fig. 3 Output High Current vs. Ambient Temperature

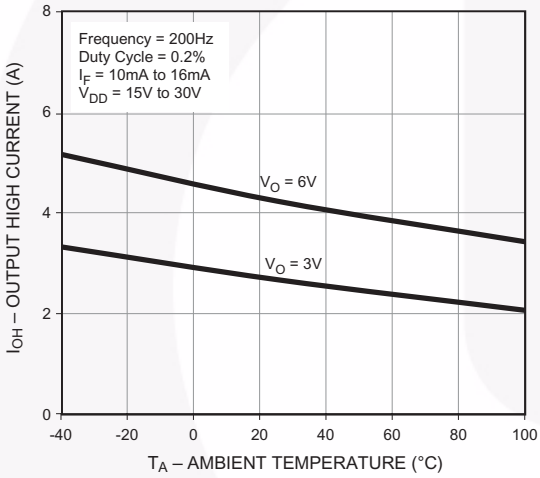

Fig. 4 Output High Current vs. Ambient Temperature

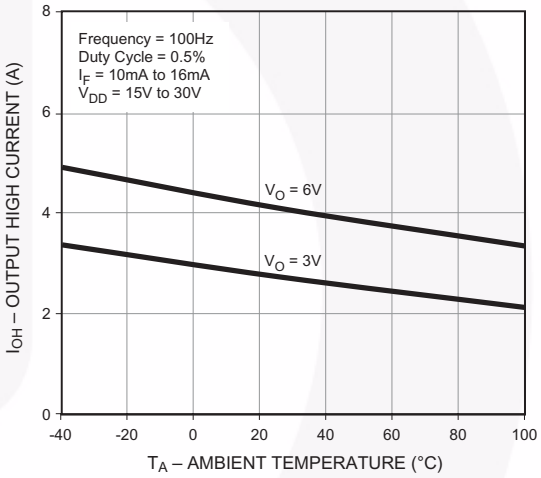

Fig. 5 Output Low Voltage vs. Output Low Current

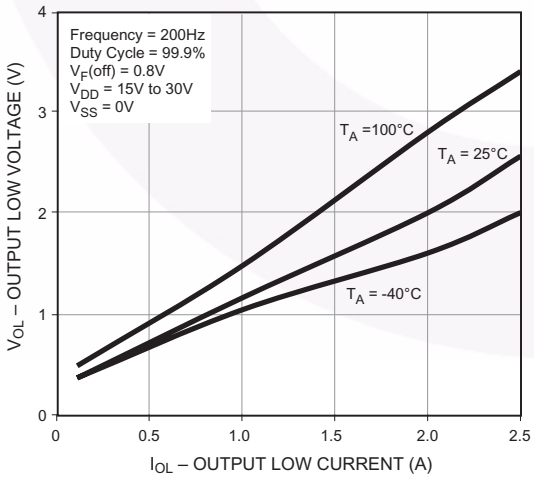

Fig. 6 Output Low Voltage vs. Ambient Temperature

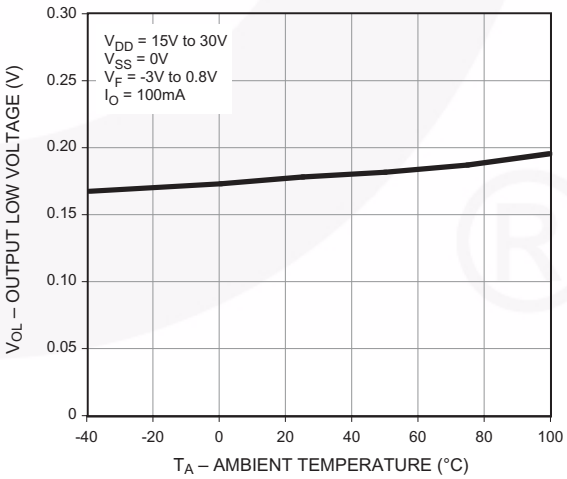

Typical Performance Curves (Continued)

Fig. 7 Output Low Current vs. Ambient Temperature

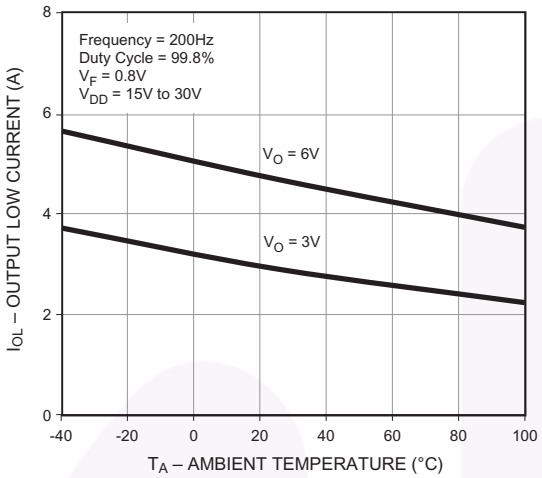

Fig. 8 Output Low Current vs. Ambient Temperature

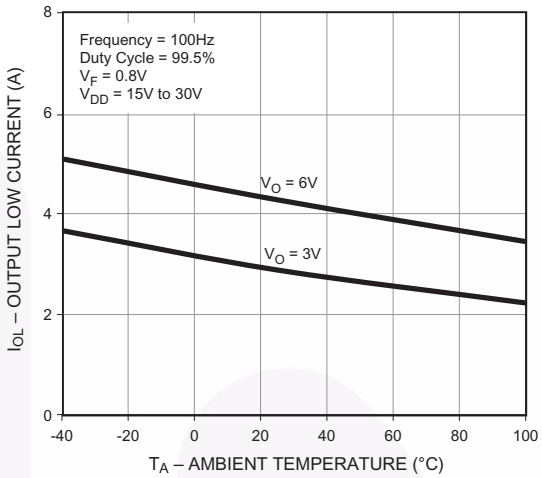

Fig. 9 Supply Current vs. Ambient Temperature

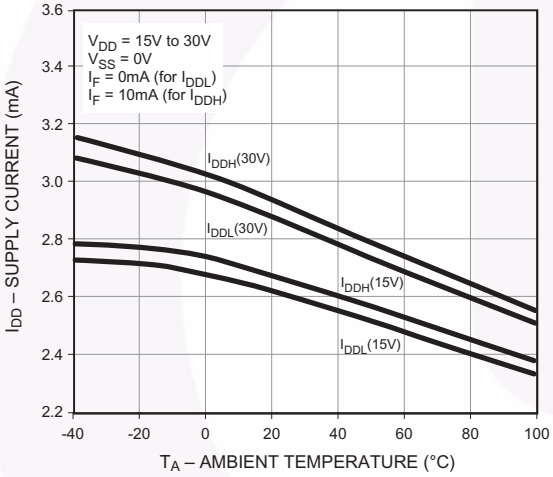

Fig. 10 Supply Current vs. Supply Voltage

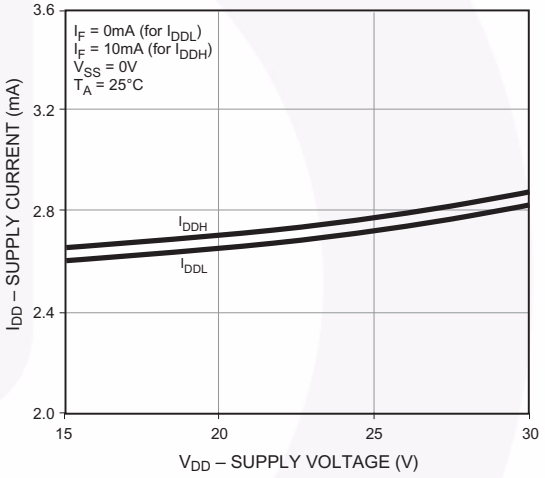

Fig. 11 Low-to-High Input Current Threshold vs. Ambient Temperature

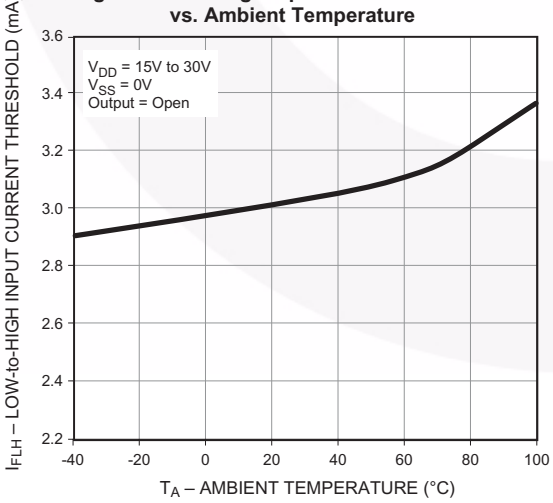

Fig. 12 Propagation Delay vs. Supply Voltage

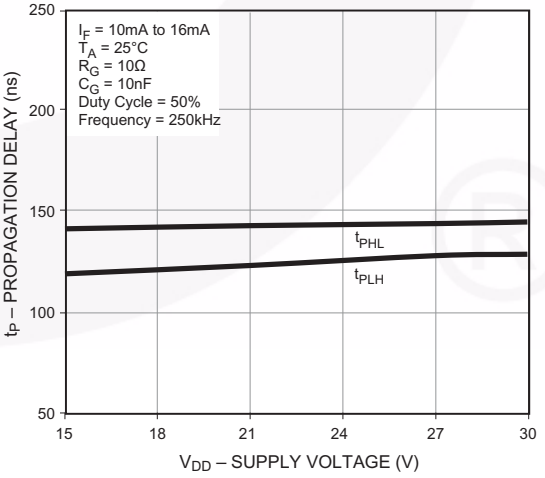

Typical Performance Curves (Continued)

Fig. 13 Propagation Delay vs. LED Forward Current

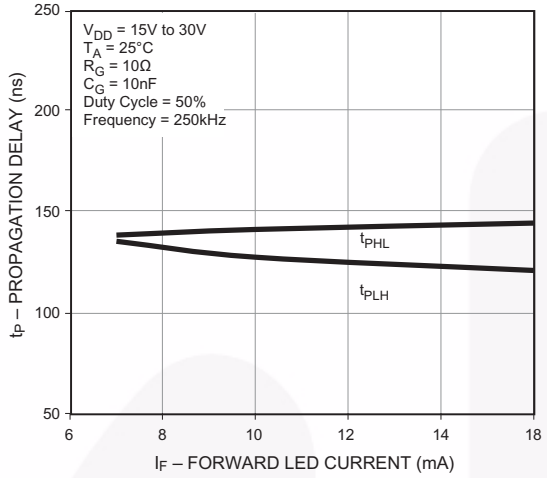

Fig. 14 Propagation Delay vs. Ambient Temperature

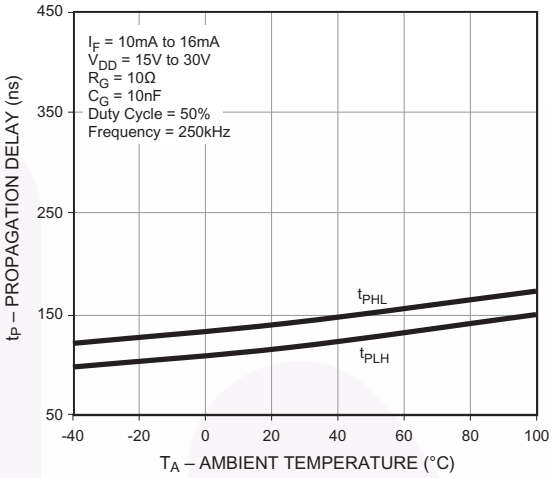

Fig. 15 Propagation Delay vs. Series Load Resistance

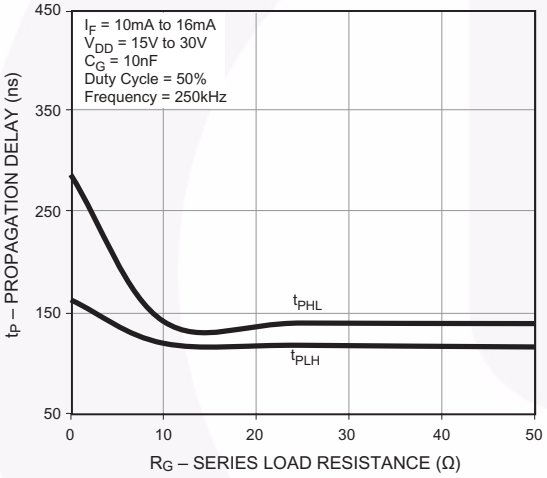

Fig. 16 Propagation Delay vs. Series Load Capacitance

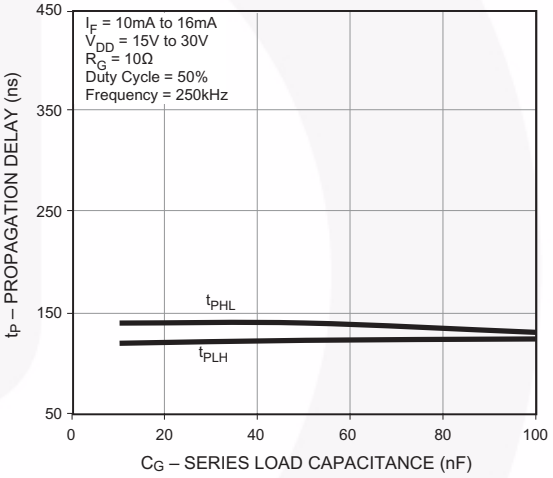

Fig. 17 Transfer Characteristics

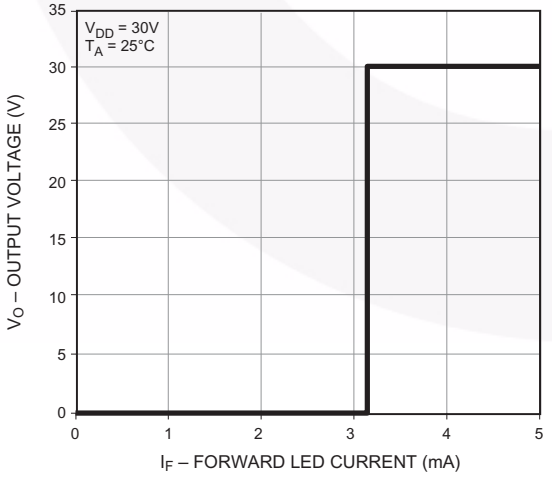

Fig. 18 Input Forward Current vs. Forward Voltage

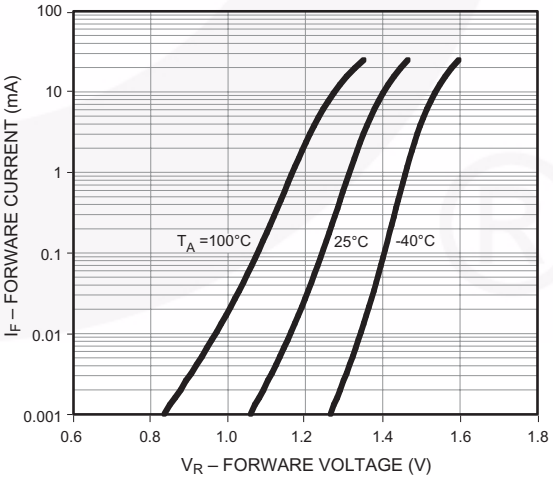

Typical Performance Curves (Continued)

Fig. 19 Under Voltage Lockout

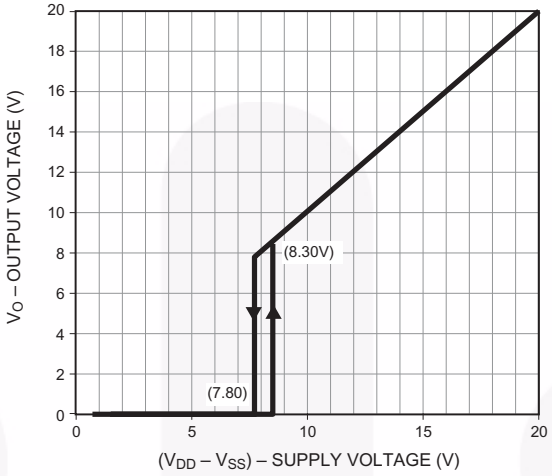

Test Circuit

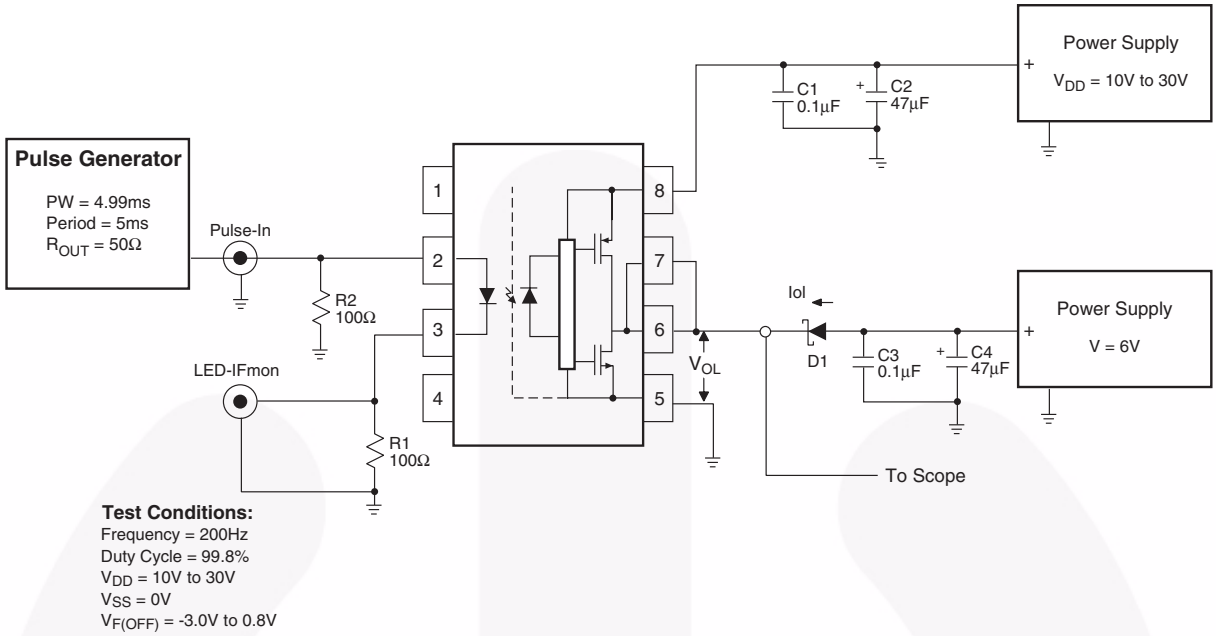

Figure 20. I_{OL} Test Circuit

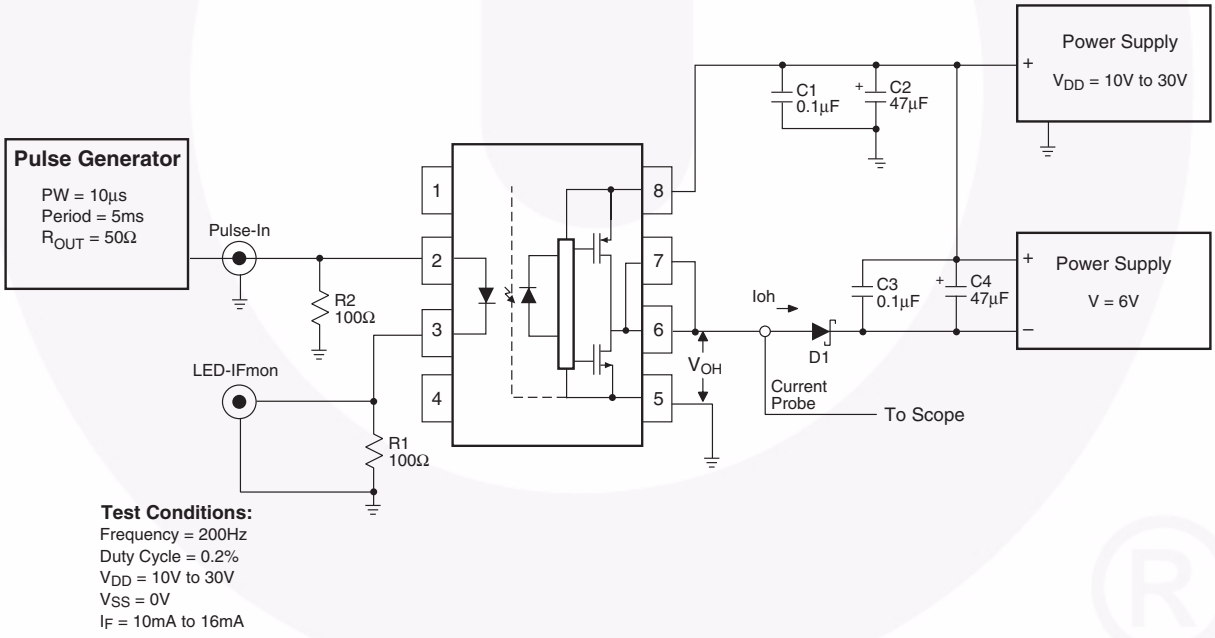

Figure 21. I_{OH} Test Circuit

Test Circuit (Continued)

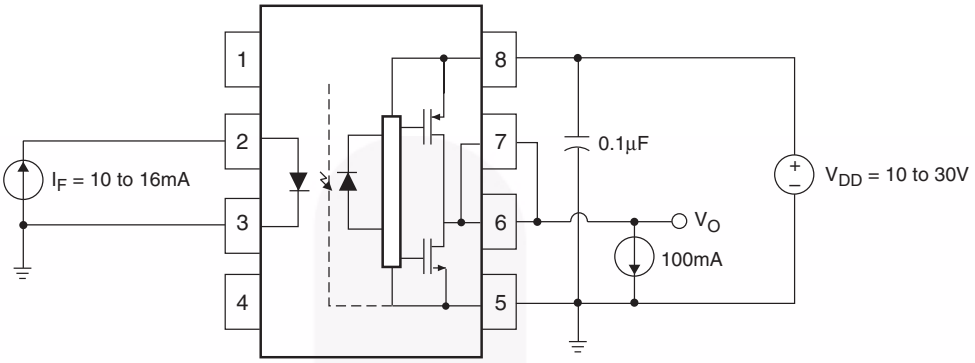

Figure 22. V_{OH} Test Circuit

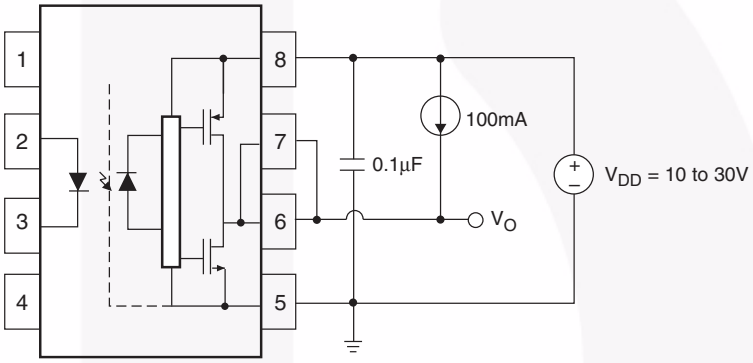

Figure 23. V_{OL} Test Circuit

Test Circuit (Continued)

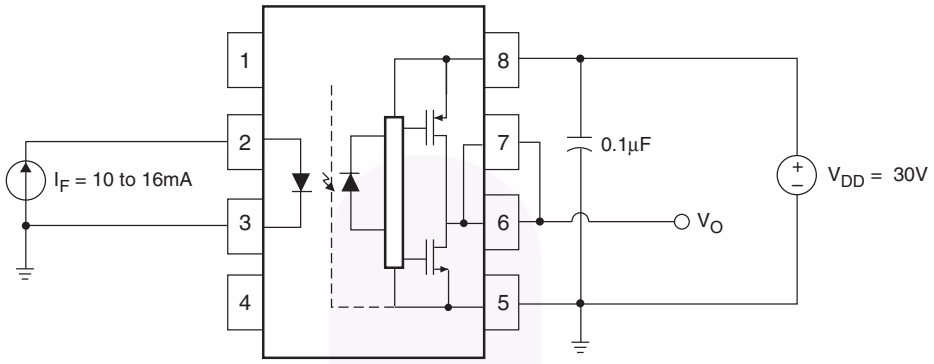

Figure 24. I_{DDH} Test Circuit

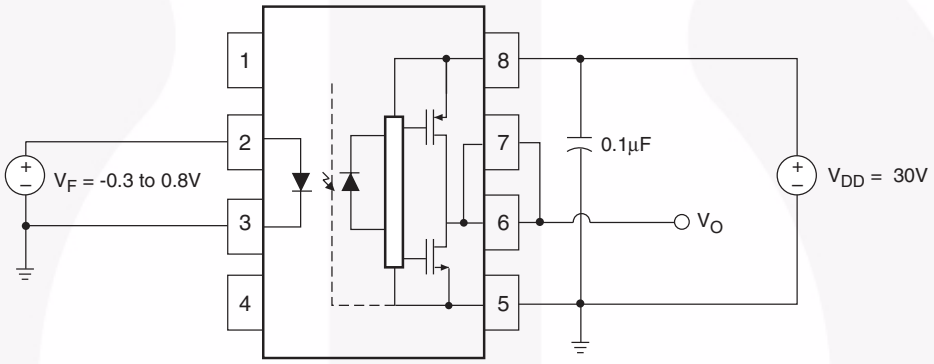

Figure 25. I_{DDL} Test Circuit

Test Circuit (Continued)

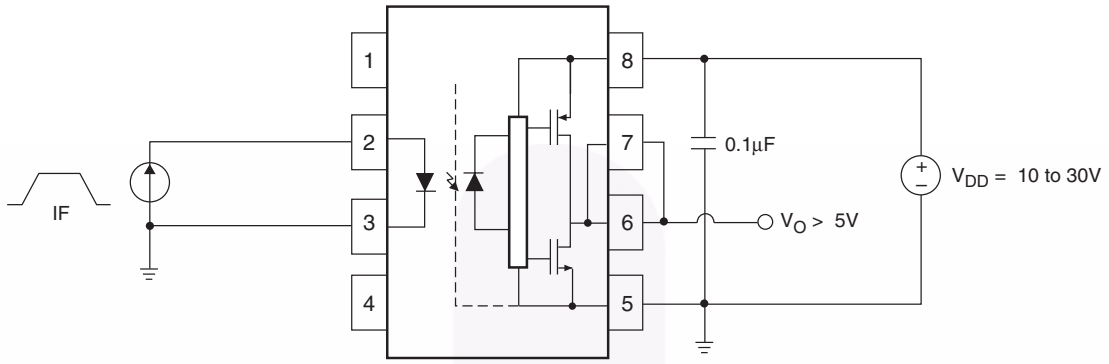

Figure 26. I_{FLH} Test Circuit

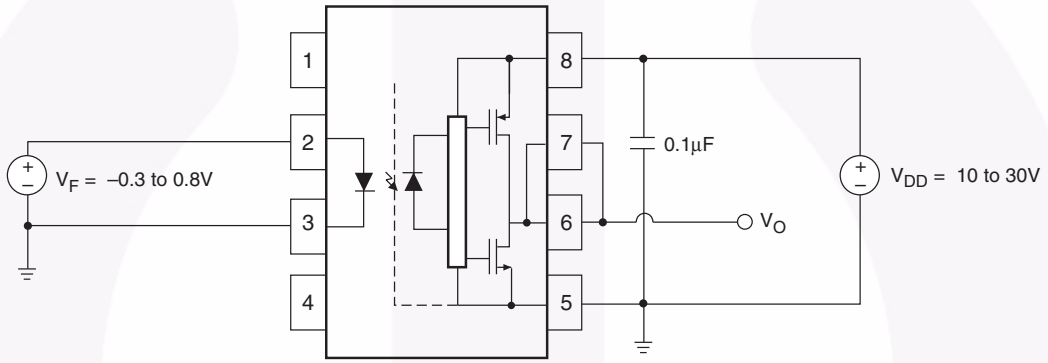

Figure 27. V_{FHL} Test Circuit

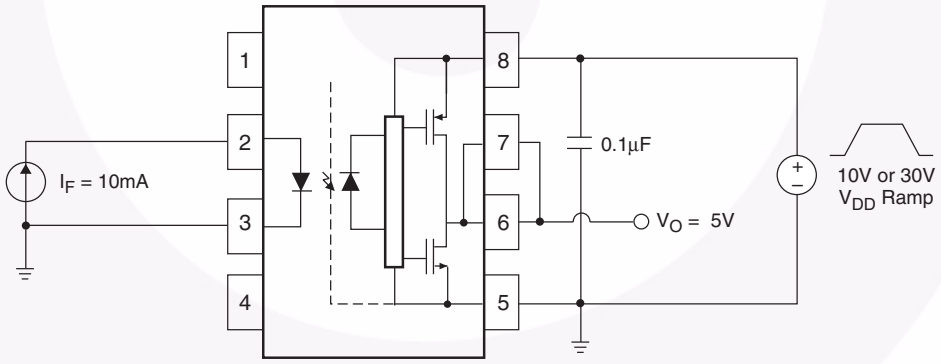

Figure 28. UVLO Test Circuit

Test Circuit (Continued)

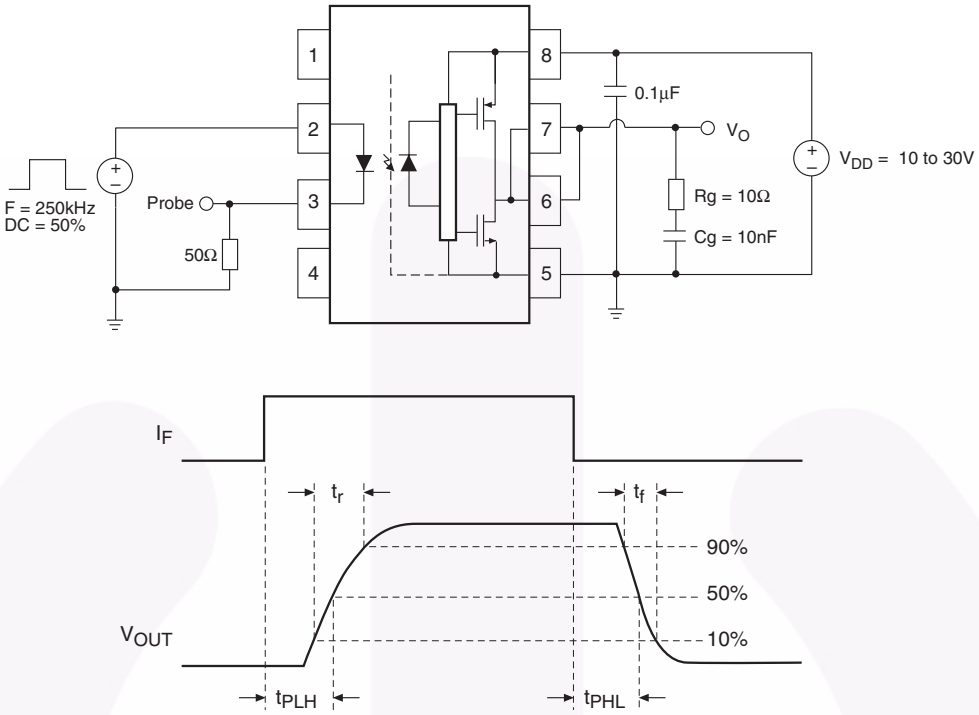

Figure 29. t_{PHL}, t_{PLH}, t_r and t_f Test Circuit and Waveforms

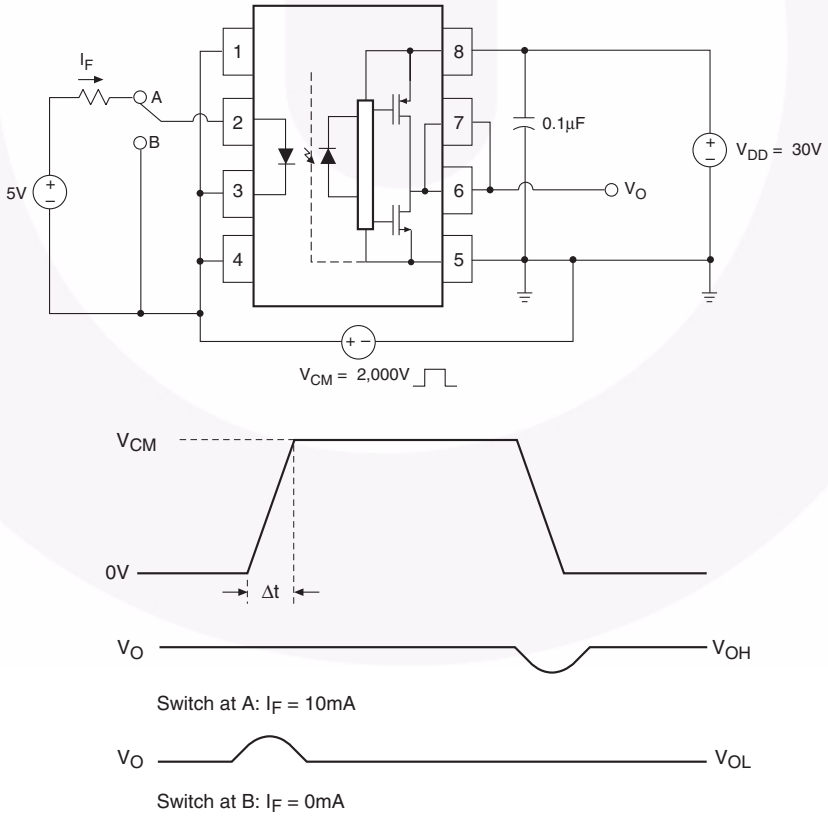

Figure 30. CMR Test Circuit and Waveforms

Ordering Information

Part Number	Package	Packing Method
FOD3182	DIP 8-Pin	Tube (50 units per tube)
FOD3182S	SMT 8-Pin (Lead Bend)	Tube (50 units per tube)
FOD3182SD	SMT 8-Pin (Lead Bend)	Tape and Reel (1,000 units per reel)
FOD3182V	DIP 8-Pin, IEC60747-5-2 option	Tube (50 units per tube)
FOD3182SV	SMT 8-Pin (Lead Bend), DIN EN/IEC 60747-5-2 option	Tube (50 units per tube)
FOD3182SDV	SMT 8-Pin (Lead Bend), DIN EN/IEC 60747-5-2 option	Tape and Reel (1,000 units per reel)
FOD3182TV	DIP 8-Pin, 0.4” Lead Spacing, DIN EN/IEC 60747-5-2 option	Tube (50 units per tube)
FOD3182TSV	SMT 8-Pin, 0.4” Lead Spacing, DIN EN/IEC 60747-5-2 option	Tube (50 units per tube)
FOD3182TSR2	SMT 8-Pin, 0.4” Lead Spacing	Tape and Reel (700 units per reel)
FOD3182TSR2V	SMT 8-Pin, 0.4” Lead Spacing, DIN EN/IEC 60747-5-2 option	Tape and Reel (700 units per reel)

Marking Information

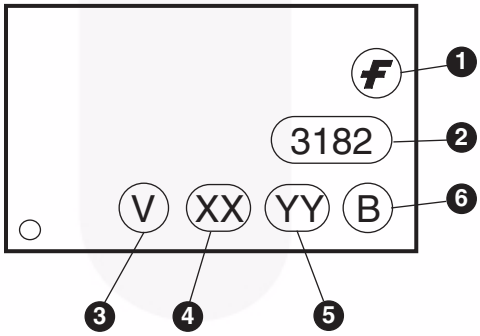

Definitions	
1	Fairchild logo
2	Device number
3	VDE mark (Note: Only appears on parts ordered with DIN EN/IEC 60747-5-2 option – See order entry table)
4	Two digit year code, e.g., ‘11’
5	Two digit work week ranging from ‘01’ to ‘53’
6	Assembly package code

Carrier Tape Specifications – Option S

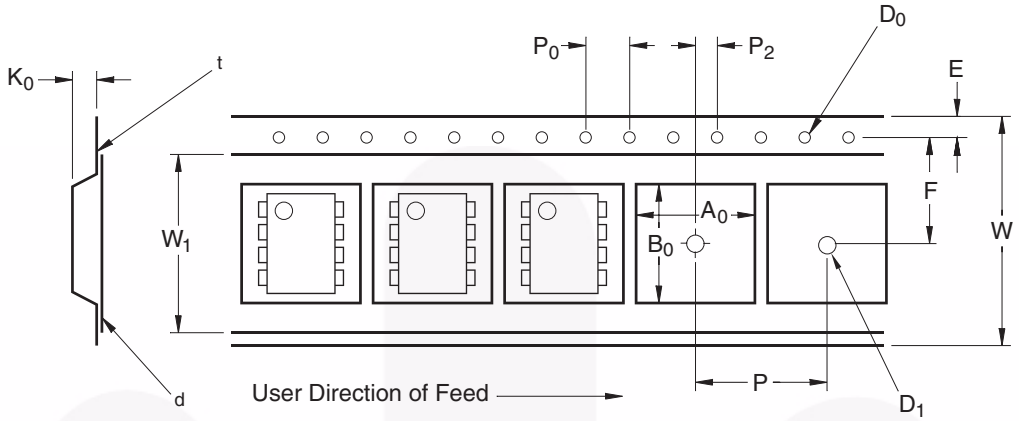

Symbol	Description	Dimension in mm
W	Tape Width	16.0 ± 0.3
t	Tape Thickness	0.30 ± 0.05
P_0	Sprocket Hole Pitch	4.0 ± 0.1
D_0	Sprocket Hole Diameter	1.55 ± 0.05
E	Sprocket Hole Location	1.75 ± 0.10
F	Pocket Location	7.5 ± 0.1
P_2		2.0 ± 0.1
P	Pocket Pitch	12.0 ± 0.1
A_0	Pocket Dimensions	10.30 ±0.20
B_0		10.30 ±0.20
K_0		4.90 ±0.20
W_1	Cover Tape Width	13.2 ± 0.2
d	Cover Tape Thickness	0.1 max
	Max. Component Rotation or Tilt	10°
R	Min. Bending Radius	30

Carrier Tape Specifications – Option TS

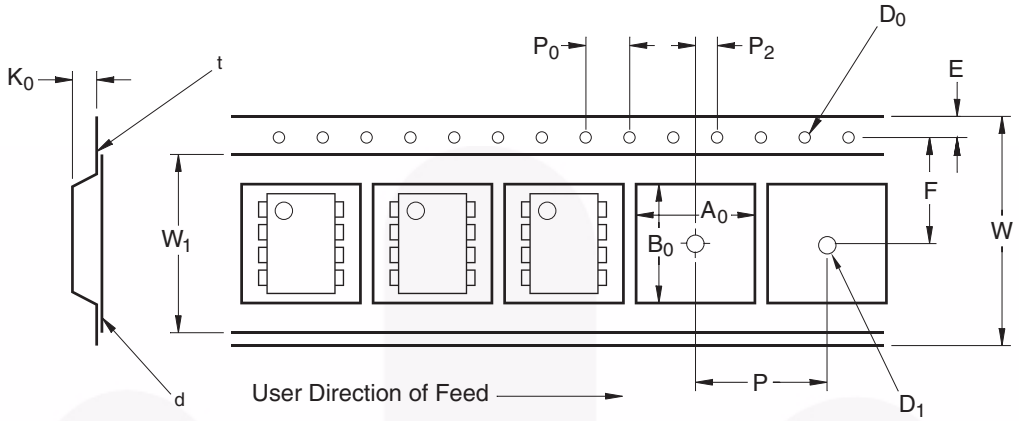

Symbol	Description	Dimension in mm
W	Tape Width	24.0 ± 0.3
t	Tape Thickness	0.40 ± 0.1
P_0	Sprocket Hole Pitch	4.0 ± 0.1
D_0	Sprocket Hole Diameter	1.55 ± 0.05
E	Sprocket Hole Location	1.75 ± 0.10
F	Pocket Location	11.5 ± 0.1
P_2		2.0 ± 0.1
P	Pocket Pitch	16.0 ± 0.1
A_0	Pocket Dimensions	12.80 ± 0.1
B_0		10.35 ± 0.1
K_0		5.7 ±0.1
W_1	Cover Tape Width	21.0 ± 0.1
d	Cover Tape Thickness	0.1 max
	Max. Component Rotation or Tilt	10°
R	Min. Bending Radius	30

Reflow Profile

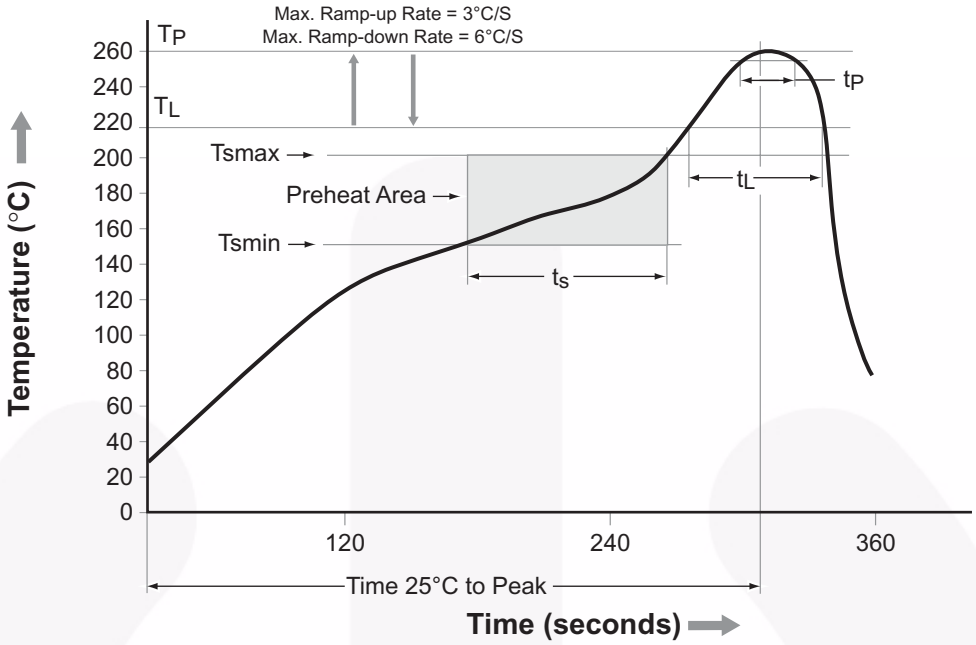

Profile Feature	Pb-Free Assembly Profile
Temperature Min. (Tsmin)	150°C
Temperature Max. (Tsmax)	200°C
Time (t_S) from (Tsmin to Tsmax)	60–120 seconds
Ramp-up Rate (t_L to t_P)	3°C/second max.
Liquidous Temperature (T_L)	217°C
Time (t_L) Maintained Above (T_L)	60–150 seconds
Peak Body Package Temperature	260°C +0°C / –5°C
Time (t_P) within 5°C of 260°C	30 seconds
Ramp-down Rate (T_P to T_L)	6°C/second max.
Time 25°C to Peak Temperature	8 minutes max.

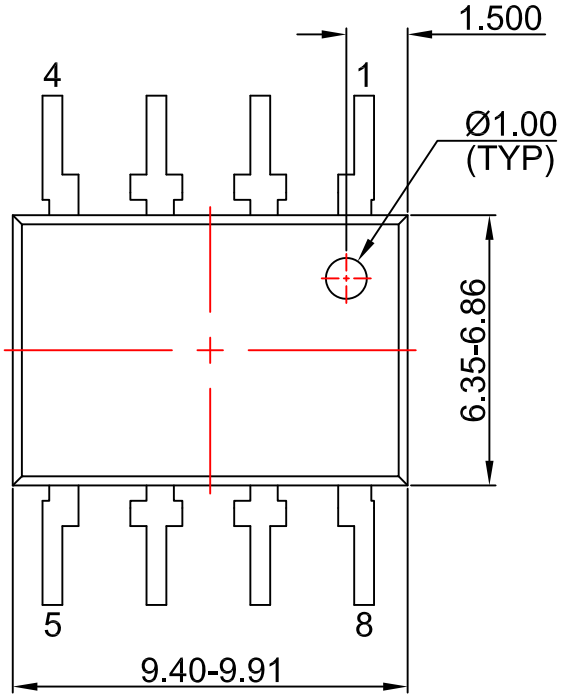

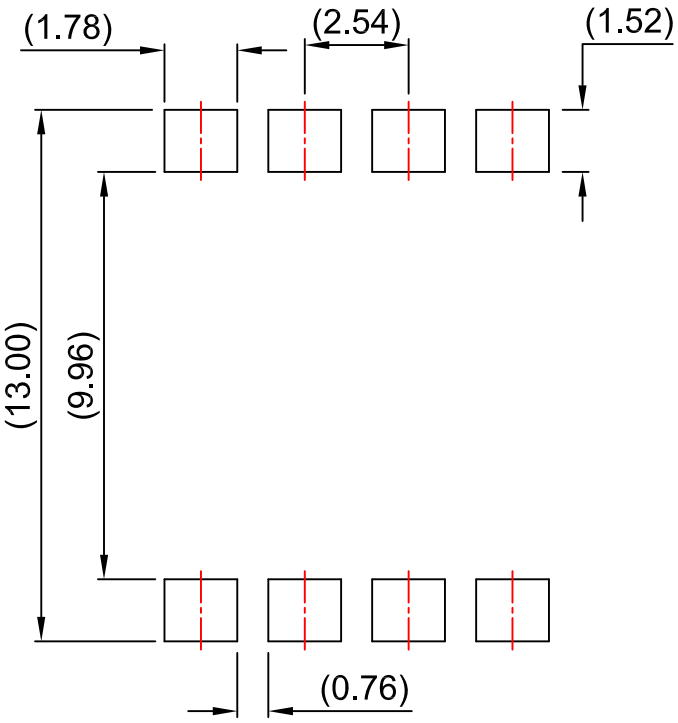

LAND PATTERN RECOMMENDATION

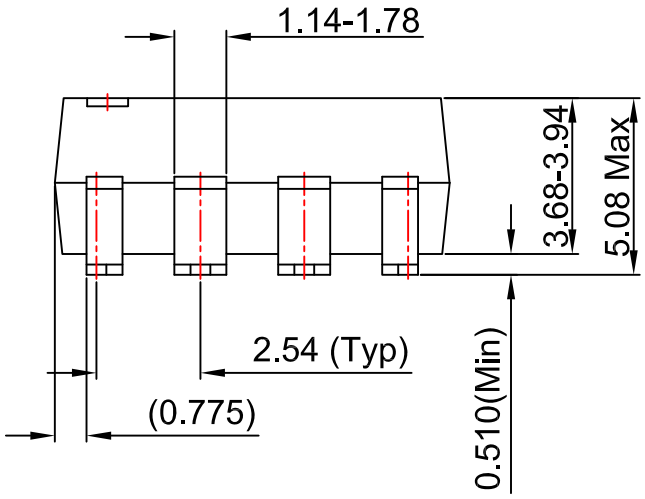

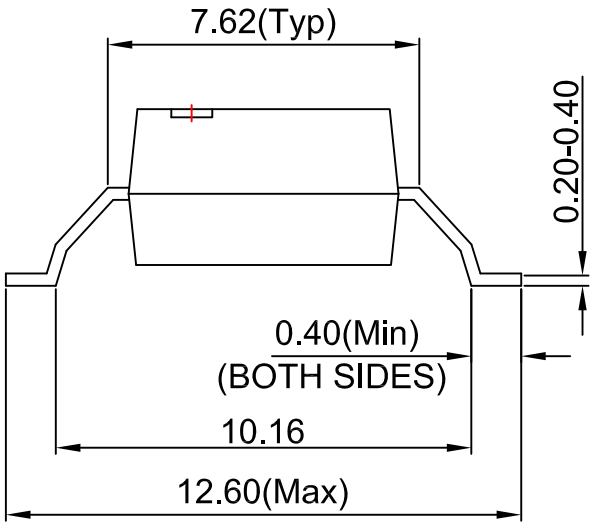

NOTES:

A) NO STANDARD APPLIES TO THIS PACKAGE

B) ALL DIMENSIONS ARE IN MILLIMETERS.

C) DIMENSIONS ARE EXCLUSIVE OF BURRS, MOLD FLASH, AND TIE BAR EXTRUSION

D) DWG FILENAME AND REVISION: MKT-N08Lrev2.

FAIRCHILD™

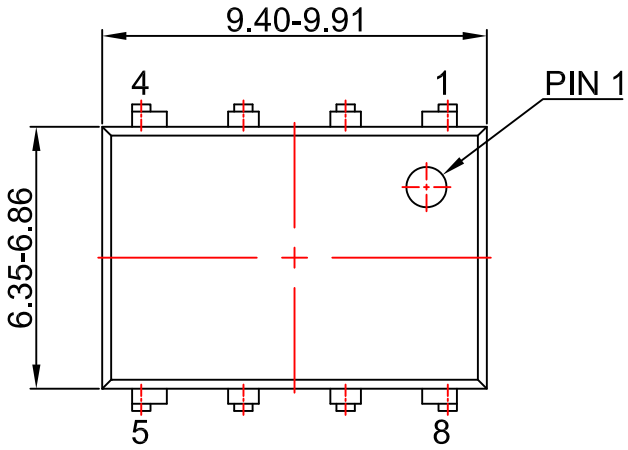

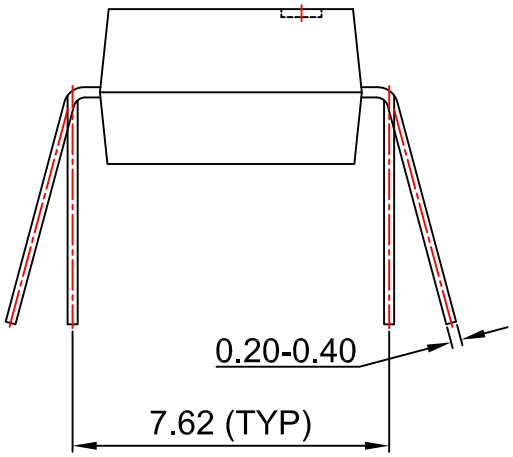

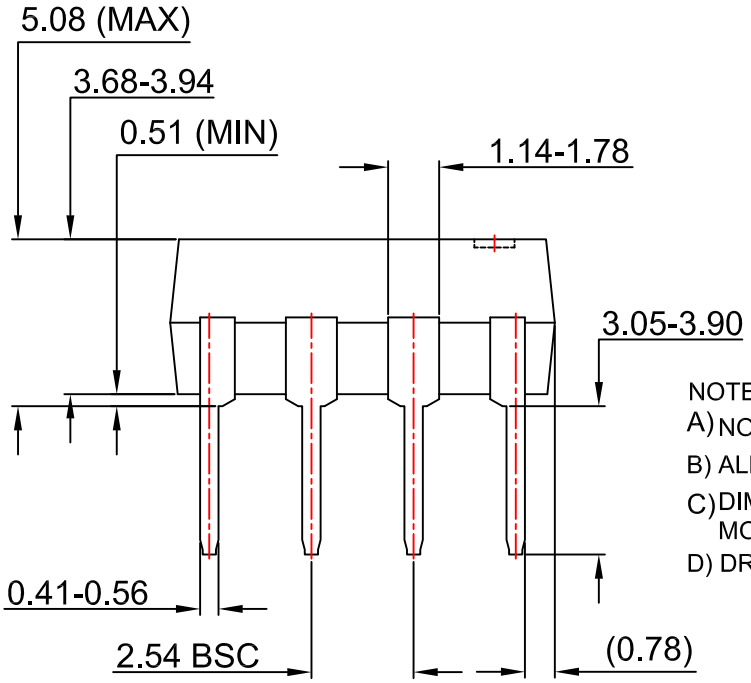

NOTES:

A) NO STANDARD APPLIES TO THIS PACKAGE

B) ALL DIMENSIONS ARE IN MILLIMETERS.

C) DIMENSIONS ARE EXCLUSIVE OF BURRS, MOLD FLASH, AND TIE BAR EXTRUSION

D) DRAWING FILENAME AND REVSION: MKT-N08GREV7

FAIRCHILD™

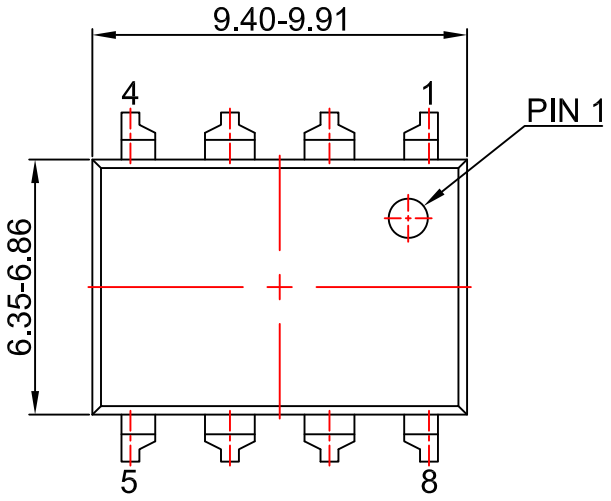

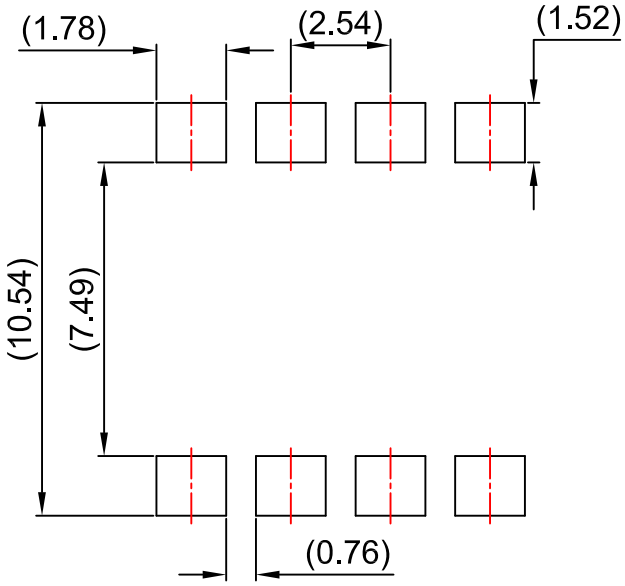

LAND PATTERN RECOMMENDATION

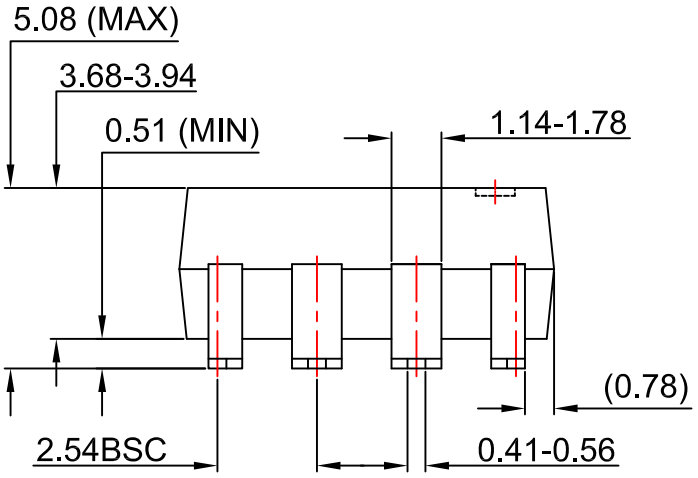

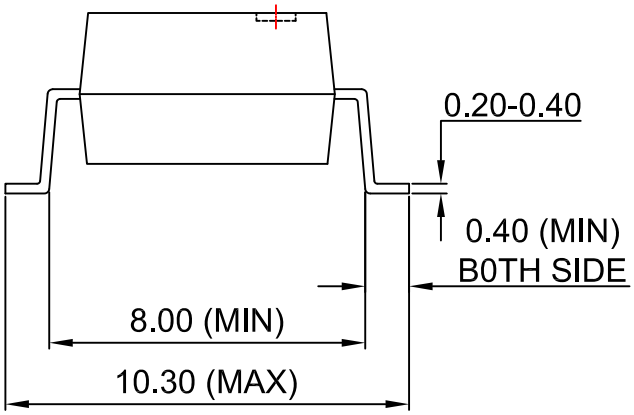

NOTES:

A) NO STANDARD APPLIES TO THIS PACKAGE

B) ALL DIMENSIONS ARE IN MILLIMETERS.

C) DIMENSIONS ARE EXCLUSIVE OF BURRS, MOLD FLASH, AND TIE BAR EXTRUSION

D) DRAWING FILENAME AND REVSION: MKT-N08Hrev7.

FAIRCHILD

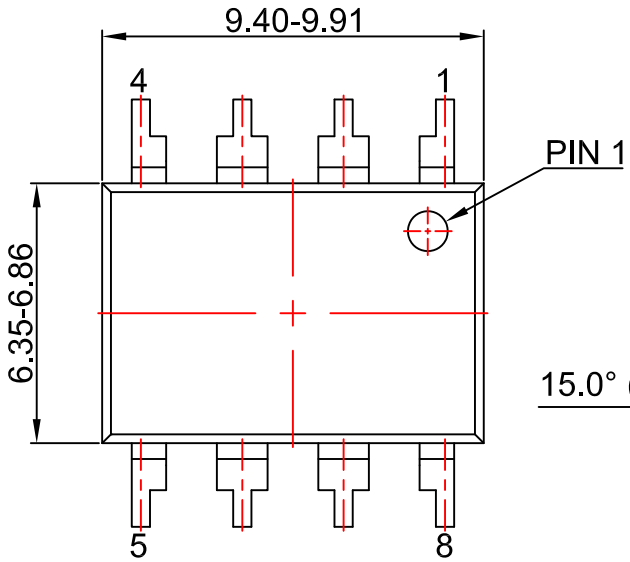

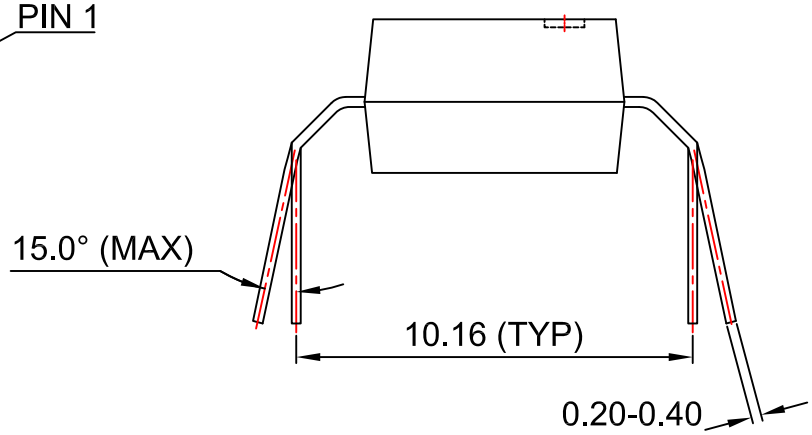

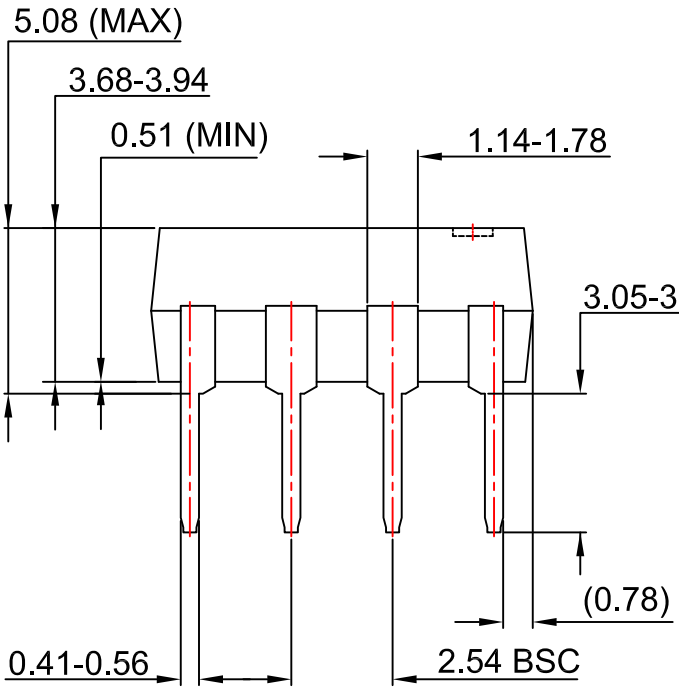

NOTES:

A) NO STANDARD APPLIES TO THIS PACKAGE

B) ALL DIMENSIONS ARE IN MILLIMETERS.

C) DIMENSIONS ARE EXCLUSIVE OF BURRS, MOLD FLASH, AND TIE BAR EXTRUSION

D) DRAWING FILENAME AND REVSION: MKT-N08REV7

FAIRCHILD™

ON Semiconductor and ON are trademarks of Semiconductor Components Industries, LLC dba ON Semiconductor or its subsidiaries in the United States and/or other countries. ON Semiconductor owns the rights to a number of patents, trademarks, copyrights, trade secrets, and other intellectual property. A listing of ON Semiconductor's product/patent coverage may be accessed at www.onsemi.com/site/pdf/Patent−Marking.pdf. ON Semiconductor reserves the right to make changes without further notice to any products herein. ON Semiconductor makes no warranty, representation or guarantee regarding the suitability of its products for any particular purpose, nor does ON Semiconductor assume any liability arising out of the application or use of any product or circuit, and specifically disclaims any and all liability, including without limitation special, consequential or incidental damages. Buyer is responsible for its products and applications using ON Semiconductor products, including compliance with all laws, regulations and safety requirements or standards, regardless of any support or applications information provided by ON Semiconductor. "Typical" parameters which may be provided in ON Semiconductor data sheets and/or specifications can and do vary in different applications and actual performance may vary over time. All operating parameters, including "Typicals" must be validated for each customer application by customer's technical experts. ON Semiconductor does not convey any license under its patent rights nor the rights of others. ON Semiconductor products are not designed, intended, or authorized for use as a critical component in life support systems or any FDA Class 3 medical devices or medical devices with a same or similar classification in a foreign jurisdiction or any devices intended for implantation in the human body. Should Buyer purchase or use ON Semiconductor products for any such unintended or unauthorized application, Buyer shall indemnify and hold ON Semiconductor and its officers, employees, subsidiaries, affiliates, and distributors harmless against all claims, costs, damages, and expenses, and reasonable attorney fees arising out of, directly or indirectly, any claim of personal injury or death associated with such unintended or unauthorized use, even if such claim alleges that ON Semiconductor was negligent regarding the design or manufacture of the part. ON Semiconductor is an Equal Opportunity/Affirmative Action Employer. This literature is subject to all applicable copyright laws and is not for resale in any manner.

PUBLICATION ORDERING INFORMATION

LITERATURE FULFILLMENT:
Literature Distribution Center for ON Semiconductor
19521 E. 32nd Pkwy, Aurora, Colorado 80011 USA
Phone: 303−675−2175 or 800−344−3860 Toll Free USA/Canada
Fax: 303−675−2176 or 800−344−3867 Toll Free USA/Canada
Email: orderlit@onsemi.com

N. American Technical Support: 800−282−9855 Toll Free USA/Canada
Europe, Middle East and Africa Technical Support:
Phone: 421 33 790 2910
Japan Customer Focus Center
Phone: 81−3−5817−1050

ON Semiconductor Website: **www.onsemi.com**

Order Literature: http://www.onsemi.com/orderlit

For additional information, please contact your local Sales Representative

Mouser Electronics

Authorized Distributor

Click to View Pricing, Inventory, Delivery & Lifecycle Information:

ON Semiconductor:
FOD3182S FOD3182SD FOD3182SDV FOD3182SV FOD3182TSR2V FOD3182TSV FOD3182TV FOD3182V FOD3182

Мы молодая и активно развивающаяся компания в области поставок электронных компонентов. Мы поставляем электронные компоненты отечественного и импортного производства напрямую от производителей и с крупнейших складов мира.

Благодаря сотрудничеству с мировыми поставщиками мы осуществляем комплексные и плановые поставки широчайшего спектра электронных компонентов.

Собственная эффективная логистика и склад в обеспечивает надежную поставку продукции в точно указанные сроки по всей России.

Мы осуществляем техническую поддержку нашим клиентам и предпродажную проверку качества продукции. На все поставляемые продукты мы предоставляем гарантию .

Осуществляем поставки продукции под контролем ВП МО РФ на предприятия военно-промышленного комплекса России , а также работаем в рамках 275 ФЗ с открытием отдельных счетов в уполномоченном банке. Система менеджмента качества компании соответствует требованиям ГОСТ ISO 9001.

Минимальные сроки поставки, гибкие цены, неограниченный ассортимент и индивидуальный подход к клиентам являются основой для выстраивания долгосрочного и эффективного сотрудничества с предприятиями радиоэлектронной промышленности, предприятиями ВПК и научно-исследовательскими институтами России.

С нами вы становитесь еще успешнее!

Наши контакты:

Телефон: +7 812 627 14 35

Электронная почта: sales@st-electron.ru

Адрес: 198099, Санкт-Петербург, Промышленная ул, дом № 19, литера Н, помещение 100-Н Офис 331