# 3.7 x 3.1mm BUILT-IN CAPACITANCE CERAMIC RESONATOR

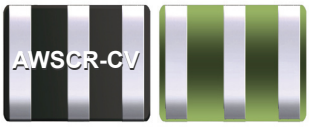


3.7 x 3.1mm

## AWSCR-CV

Pb in ceramic
(exempt per RoHS 2002/95/EC Annex (7))

**RoHS Compliant**

## FEATURES:

- Low resonant impedance
- Built-in load capacitors
- IR reflow capable

## APPLICATIONS:

- Remote controls, Microprocessor clocks, Mobile phones, DVD & CD-Roms, Electric appliances,
- Consumer electronics

## STANDARD SPECIFICATIONS:

| Item | Requirement |
|---|---|
| Frequency Range | 8.00MHz to 50.00 MHz |
| Resonant Impedance | See Table 1 |
| Frequency Tolerance | ± 0.5% ( at 25℃) |
| Frequency stability (-25℃～+85℃)* | ±0.4% (8.00 MHz~ 13.00 MHz) |
| | ±0.3% (13.01 MHz~ 50.00 MHz) |
| Withstanding Voltage (V) | 50 (DC , 1 min) |
| Rating Voltage (1) D.C.Voltage | 6 V DC max |
| (2) A.C. Voltage | 15 Vp-p. max |
| Built-in Capacitance | See Table 1 |
| Insulation Resistance | 100MΩ min. (10V, 1min) |
| Operating Temperature | -25°C to +85°C* |
| Storage Temperature | -55°C to +85°C |
| Aging Rate (Fosc) | ±0.3% max. (10 years) |

Table 1

| Frequency range (MHz) | Resonant Impedance (Ro)(Ω) max | Standard Built-in Capacitance C1=C2 (pF) |
|---|---|---|
| 8.00 MHz - 13.00 MHz | 30 | 22pF± 20% |
| 13.01 MHz - 15.99 MHz | 60 | 22pF± 20% |
| 16.00 MHz - 20.00 MHz | 40 | 22pF± 20% |
| 20.00 MHz - 25.99 MHz | 40 | 10pF± 20% |
| 26.00 MHz - 50.00 MHz | 40 | 5pF± 20% |

* Please contact ABRACON for tighter stability and/or wider temperature range.

## TEST CIRCUIT:

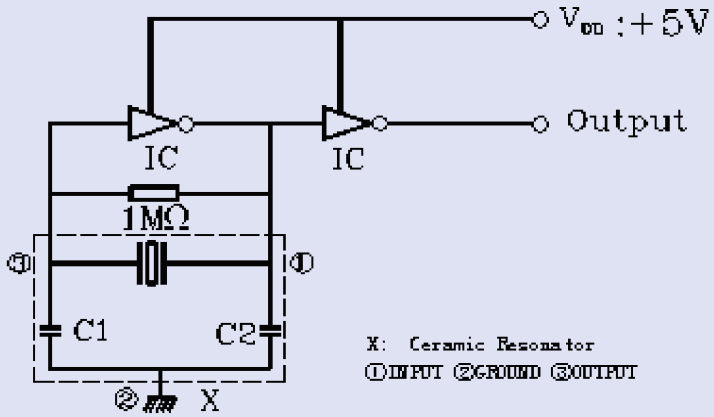


## OPTIONS AND PART IDENTIFICATION:

(Left blank if standard)

**AWSCR - XX.XXCV - C□□ - □**

| Frequency | Load Capacitance | Packaging |
|---|---|---|
| Frequency in MHz | Contact ABRACON for Built-in Capacitance options | T for Tape and Reel |



30332 Esperanza, Rancho Santa Margarita, California 92688
tel 949-546-8000 | fax 949-546-8001 | www.abracon.com

# 3.7 x 3.1mm BUILT-IN CAPACITANCE CERAMIC RESONATOR

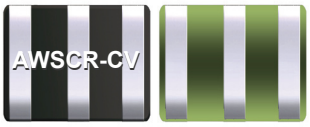


3.7 x 3.1mm

## AWSCR-CV

Pb in ceramic
(exempt per RoHS 2002/95/EC Annex (7))

**RoHS Compliant**

## OUTLINE DRAWING:

Dimensions: mm

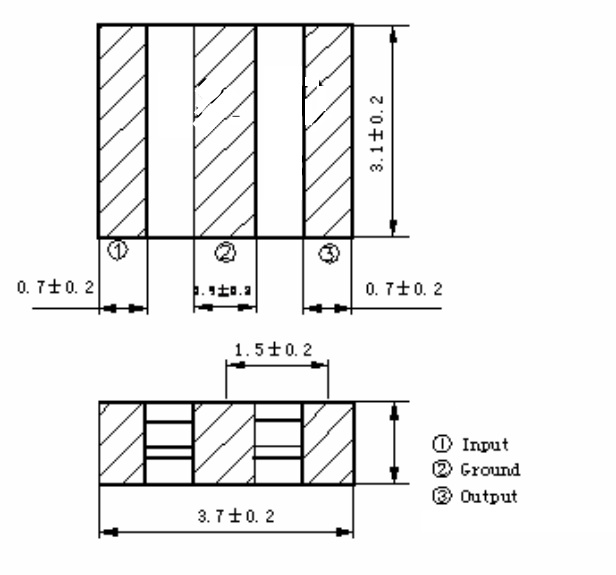


** A stands for the thickness of the ceramic element, which varies with the frequency

### RECOMMENDED LAND PATTERN

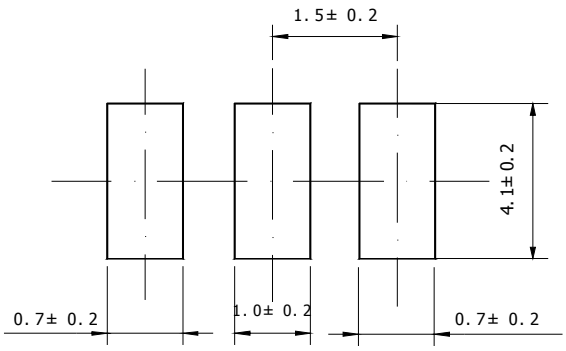


## TAPE & REEL: (1,000pcs/reel)

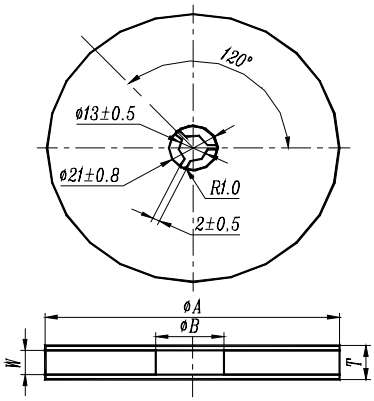


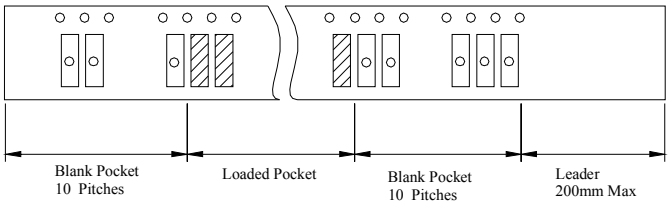


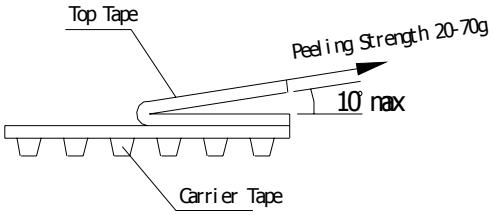


| ϕA | ϕB | W | T | Pieces per reel | Carrier tape size |
|---|---|---|---|---|---|
| 180±3 | 60min | 12.4min | 19.4max | 1000typ. | 12 |

Dimensions: mm



30332 Esperanza, Rancho Santa Margarita, California 92688
tel 949-546-8000 | fax 949-546-8001 | www.abracon.com

## REFLOW PROFILE:

Dimensions: mm

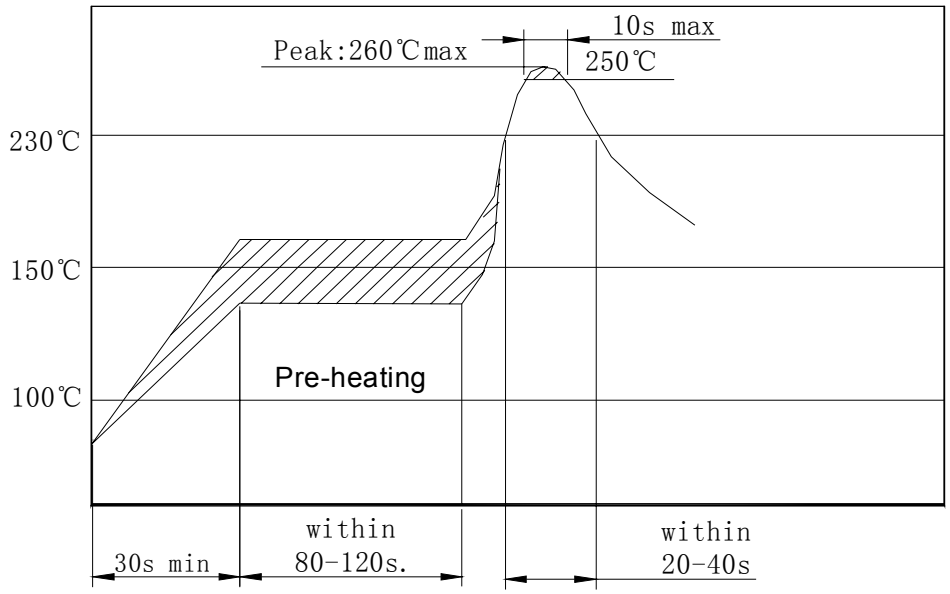


## CAUTION

- Do not apply excess mechanical stress to the component body or terminations. Do not attempt to re-form or bend the components as this will cause damage to the component.
- This component is not hermetically sealed. Do not clean or wash the component.
- Reflow soldering: Do not use strong acidity flux, such as flux with chlorine content of greater than 0.2wt% during reflow Soldering.
- Do not expose the component to open flame.
- This specification applies to the functionality of the component as a single unit. Customers are advised to insure that the component is thoroughly evaluated in the particular application.
- Shelf life: The warranted shelf life of this product is six months after the delivery date under the conditions of sealed, unopened, original packaging.
- Storage conditions: If the product is to be stored for a period greater than six months after the delivery date, it is recommended that customers confirm the solderability and characteristics for the product prior to use.
- This product is not recommended for use in the following applications: Automotive, Medical, Military, Safety, or any other high-reliability, life-dependant application. Contact Abracon Corporation prior to using this product when in doubt.

**ATTENTION:** Abracon Corporation's products are COTS – Commercial-Off-The-Shelf products; suitable for Commercial, Industrial and, where designated, Automotive Applications. Abracon's products are not specifically designed for Military, Aviation, Aerospace, Life-dependant Medical applications or any application requiring high reliability where component failure could result in loss of life and/or property. For applications requiring high reliability and/or presenting an extreme operating environment, written consent and authorization from Abracon Corporation is required. Please contact Abracon Corporation for more information.



30332 Esperanza, Rancho Santa Margarita, California 92688
tel 949-546-8000 | fax 949-546-8001 | www.abracon.com

Мы молодая и активно развивающаяся компания в области поставок электронных компонентов. Мы поставляем электронные компоненты отечественного и импортного производства напрямую от производителей и с крупнейших складов мира.

Благодаря сотрудничеству с мировыми поставщиками мы осуществляем комплексные и плановые поставки широчайшего спектра электронных компонентов.

Собственная эффективная логистика и склад в обеспечивает надежную поставку продукции в точно указанные сроки по всей России.

Мы осуществляем техническую поддержку нашим клиентам и предпродажную проверку качества продукции. На все поставляемые продукты мы предоставляем гарантию .

Осуществляем поставки продукции под контролем ВП МО РФ на предприятия военно-промышленного комплекса России , а также работаем в рамках 275 ФЗ с открытием отдельных счетов в уполномоченном банке. Система менеджмента качества компании соответствует требованиям ГОСТ ISO 9001.

Минимальные сроки поставки, гибкие цены, неограниченный ассортимент и индивидуальный подход к клиентам являются основой для выстраивания долгосрочного и эффективного сотрудничества с предприятиями радиоэлектронной промышленности, предприятиями ВПК и научно-исследовательскими институтами России.

С нами вы становитесь еще успешнее!

**Наши контакты:**

**Телефон:** +7 812 627 14 35

**Электронная почта:** sales@st-electron.ru

**Адрес:** 198099, Санкт-Петербург, Промышленная ул, дом № 19, литера Н, помещение 100-Н Офис 331