NHD-12864AZ-FL-YBW

Graphic Liquid Crystal Display Module

NHD-	Newhaven Display
12864-	128 x 64 Pixels
AZ-	Model
F-	Transflective
L-	Yellow/Green LED backlight
Y-	STN Positive, Yellow/Green
B-	6:00 Optimal View
W-	Wide Temperature
	RoHS Compliant

Newhaven Display International, Inc.

2661 Galvin Ct.

Elgin IL, 60124

Ph: 847-844-8795 Fax: 847-844-8796

www.newhavendisplay.com

nhtech@newhavendisplay.com nhsales@newhavendisplay.com

Document Revision History

Revision	Date	Description	Changed by
0	12/23/08	Initial Release	-
1	4/2/10	User guide reformat	BE
2	5/21/10	Updated Pin Out and Electrical Characteristics	MC
3	12/17/12	Controller information updated	AK
4	1/18/17	Electrical & Optical Characteristics Updated	SB

Functions and Features

- **128x64 pixels**
- **Built-in NT7108C controller**
- **+5.0V power supply**
- **1/64 duty, 1/9 bias**
- **RoHS Compliant**

Mechanical Drawing

Rev	Description	Date

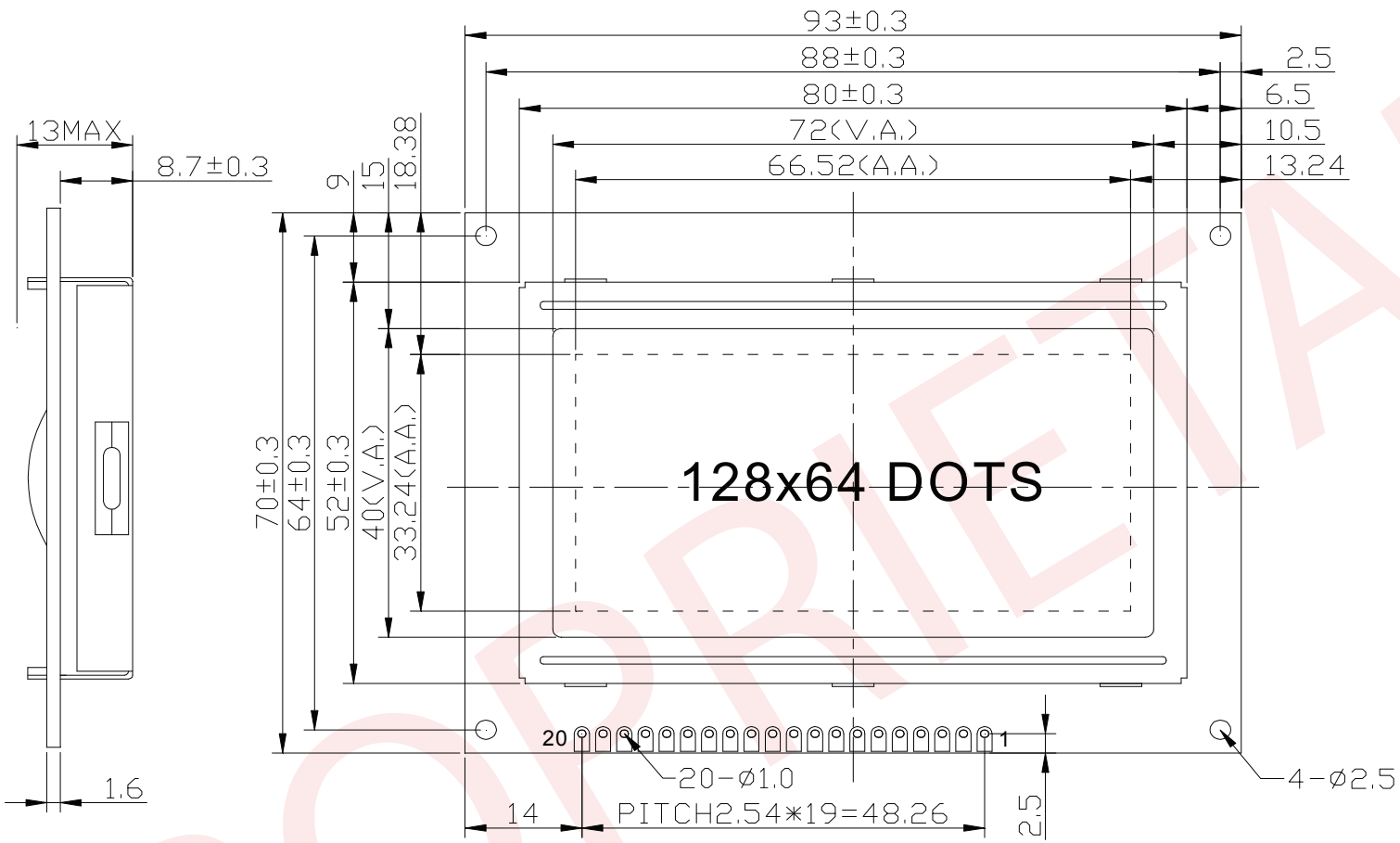

Pin Assignment

1	VSS
2	VDD
3	V0
4	RS
5	R/W
6	E
7~14	DB0~DB7
15	CS1B
16	CS2B
17	/RST
18	VEE
19	LED+
20	LED-

Notes:

1. Driving: 1/64 Duty, 1/9 Bias
2. Voltage: 5.0V V_{DD}, 9.5V V_{LCD}
3. Display Type: STN Positive/ Yellow-Green / Transflective
4. Optimal View: 6:00
5. Backlight: Yellow-Green LED
6. Driver IC: NT7108 8bit MPU

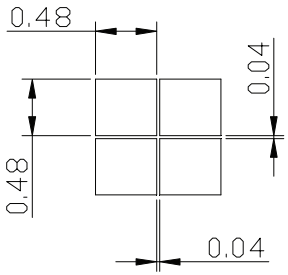

Unit	NEWHAVEN DISPLAY INTERNATIONAL	
mm		
Gen. Tol. ±0.3	Date 01/18/17	Part Number: NHD-12864AZ-FL-YBW

PROPRIETARY

The information contained herein is the exclusive property of Newhaven Display International, Inc. and shall not be copied, reproduced, and/or disclosed in any format without permission.

Pin Description and Wiring Diagram

Pin No.	Symbol	External Connection	Function Description
1	VSS	Power Supply	Ground
2	VDD	Power Supply	Supply Voltage for Logic (+5.0V)
3	V0	Adj Power Supply	Supply Voltage for Contrast (approx. -4.5V)
4	RS	MPU	Register Select: 1=Data, 0=Instruction
5	R/W	MPU	Read/Write select signal, R/W=1: Read R/W: =0: Write
6	E	MPU	Operation Enable signal. Falling edge triggered.
7-14	DB0-DB7	MPU	8-Bit Bi-Directional Data Bus
15	CS1B	MPU	Chip Select: CS1=H, CS2=L → select IC1 (left side)
16	CS2B	MPU	CS1=L, CS2=H → select IC2 (right side)
17	/RES	MPU	Active LOW Reset signal
18	VEE	Power Supply	Negative Voltage Output (-5.0V)
19	LED+	Power Supply	Backlight Anode (+5.0V via on-board resistor)
20	LED-	Power Supply	Backlight Cathode

Recommended LCD connector: 2.54mm pitch pins
Backlight connector: ---

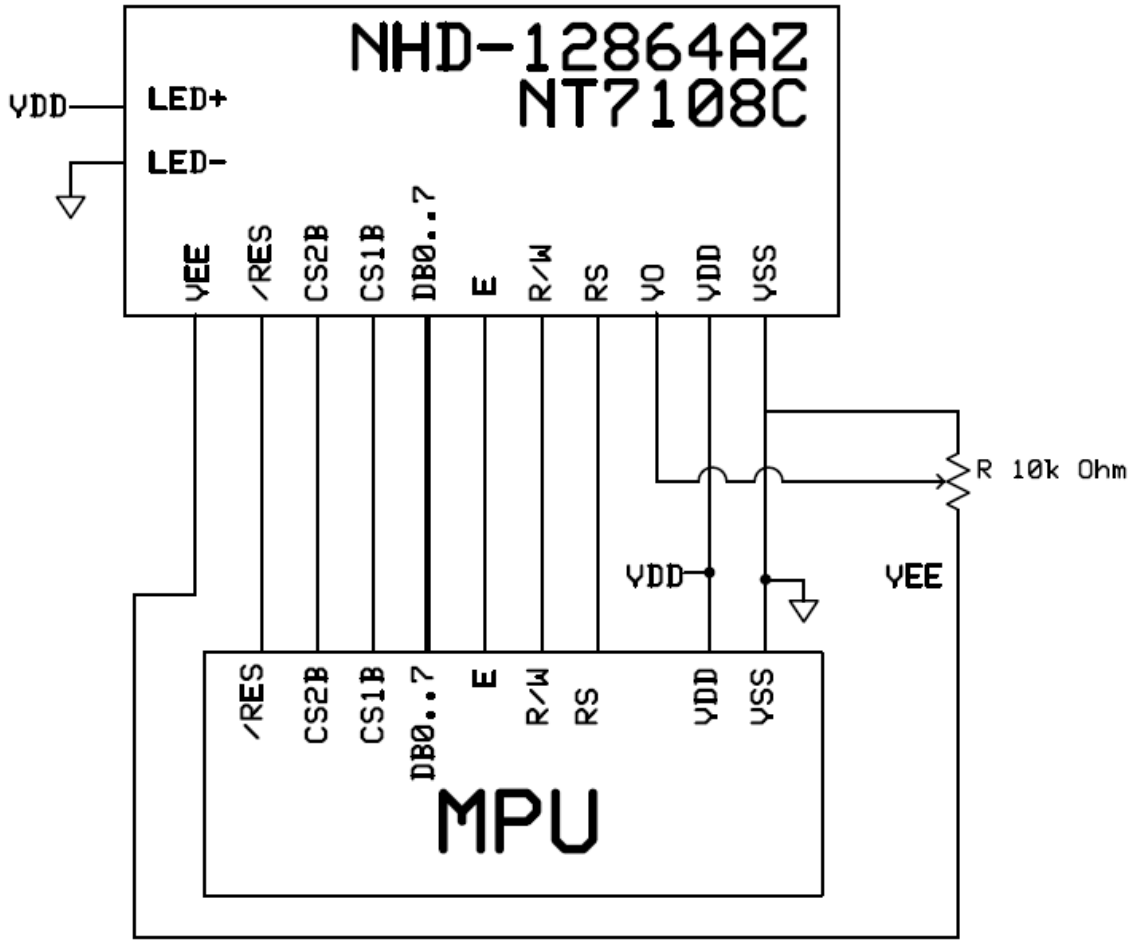

Electrical Characteristics

Item	Symbol	Condition	Min.	Typ.	Max.	Unit
Operating Temperature Range	T_{OP}	Absolute Max	-20	-	+70	ºC
Storage Temperature Range	T_{ST}	Absolute Max	-30	-	+80	ºC
Supply Voltage	V_{DD}	-	4.8	5	5.2	V
Supply Current	I_{DD}	V_{DD} = 5.0V	1	2	3	mA
Supply for LCD (contrast)	V_{LCD}	T_{OP} = 25°C	9.3	9.5	9.7	V
"H" Level input	V_{IH}	-	0.7 * V_{DD}	-	V_{DD}	V
"L" Level input	V_{IL}	-	V_{SS}	-	0.3 * V_{DD}	V
"H" Level output	V_{OH}	-	2.4	-	V_{DD}	V
"L" Level output	V_{OL}	-	V_{Ss}	-	0.4	V
Backlight Supply Voltage	V_{LED}	-	4.8	5.0	5.2	V
Backlight Supply Current	I_{LED}	V_{LED} = 5.0V	130	150	170	mA

Optical Characteristics

Item		Symbol	Condition	Min.	Typ.	Max.	Unit
Optimal Viewing Angles	Top	φY+	CR ≥ 2	-	40	-	°
	Bottom	φY-		-	60	-	°
	Left	θX-		-	60	-	°
	Right	θX+		-	60	-	°
Contrast Ratio		CR	-	2	5	-	-
Response Time	Rise	T_R	T_{OP} = 25°C	-	150	250	ms
	Fall	T_F		-	200	300	ms

Controller Information

Built-in NT7108C controller.
Please download specification at http://www.newhavendisplay.com/app_notes/NT7108.pdf

Table of Commands

Instruction	RS	R/W	DB7	DB6	DB5	DB4	DB3	DB2	DB1	DB0	Function
Display on/off	L	L	L	L	H	H	H	H	H	L/H	Controls the display on or off. Internal status and display RAM data is not affected. L:OFF, H:ON
Set address (Y address)	L	L	L	H	Y address (0-63)						Sets the Y address in the Y address counter.
Set page (X address)	L	L	H	L	H	H	H	Page (0-7)			Sets the X address at the X address register.
Display Start line (Z address)	L	L	H	H	Display start line (0-63)						Indicates the display data RAM displayed at the top of the screen.
Status read	L	H	Busy	L	On/ Off	Reset	L	L	L	L	Read status. BUSY L: Ready H: In operation ON/OFF L: Display ON H: Display OFF RESET L: Normal H: Reset
Write display data	H	L	Write data								Writes data (DB0: 7) into display data RAM. After writing instruction, Y address is increased by 1 automatically.
Read display data	H	H	Read data								Reads data (DB0: 7) from display data RAM to the data bus.

Timing Characteristics

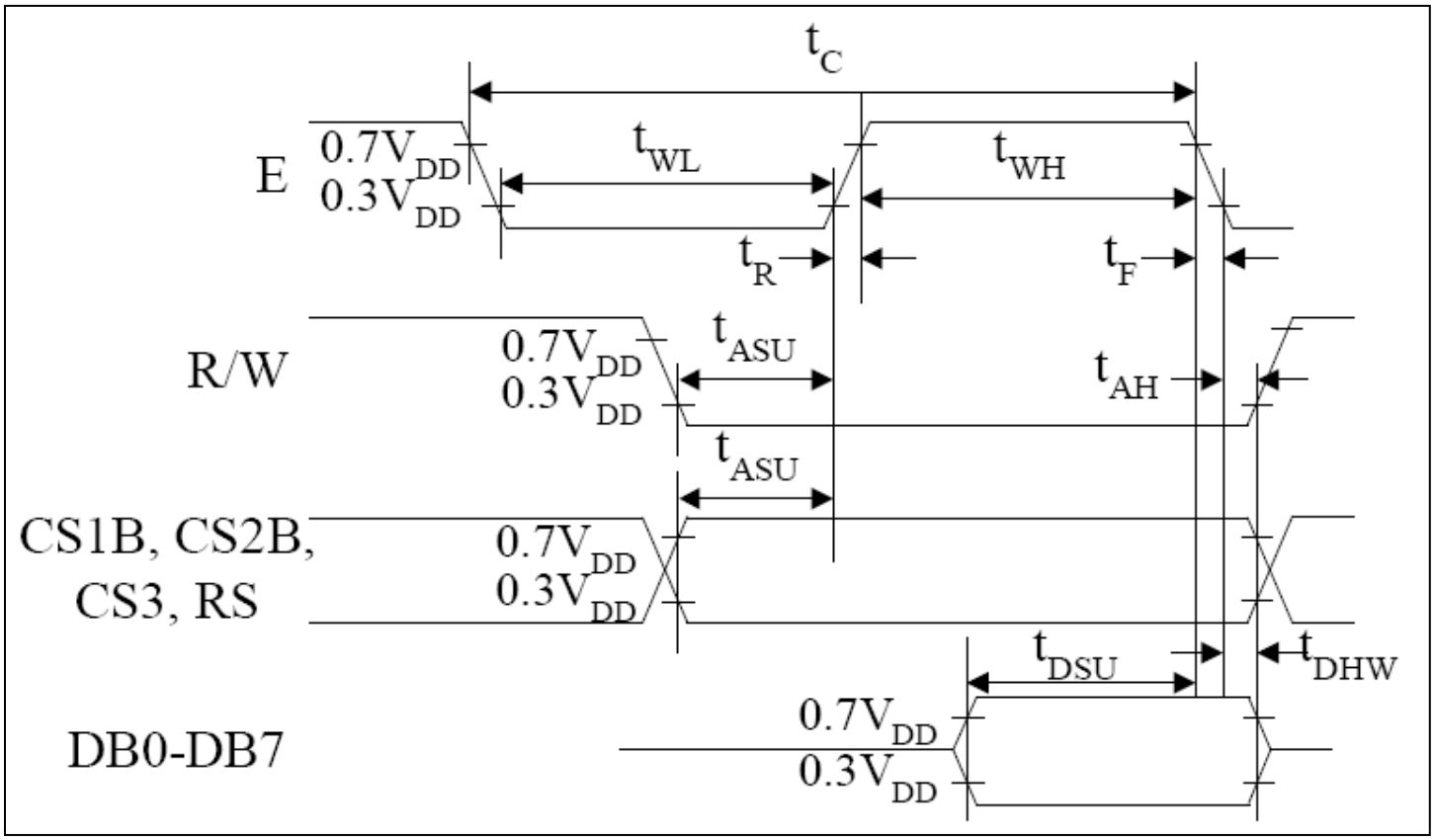

Characteristic	Symbol	Min	Type	Max	Unit
E cycle	t_C	1000	-	-	ns
E high level width	t_{WH}	450	-	-	
E low level width	t_{WL}	450	-	-	
E rise time	t_R	-	-	25	
E fall time	t_F	-	-	25	
Address set-up time	t_{ASU}	140	-	-	
Address hold time	t_{AH}	10	-	-	
Data set-up time	t_{DSU}	200	-	-	
Data delay time	t_D	-	-	320	
Data hold time (write)	t_{DHW}	10	-	-	
Data hold time (read)	t_{DHR}	20	-	-	

Example Initialization Program

```
'-------------------------------------------------------------------------------
'DB0-DB7   7-14              P1
'CS2       16                P3.6
'CS1       15                P3.1
'RST       17                P3.2
'R/W       5                 P3.7
'D/I       4                 P3.0
'E         6                 P3.4
'-------------------------------------------------------------------------------
Sub Init
 Reset P3.2
 Set P3.2
 Reset P3.4
 Reset P3.0
 Reset P3.7
 Reset P3.6
 Reset P3.1
 A = &H3F
 Call Comleft                                                    'display on
 Call Comright                                                   'display on
End Sub
'-------------------------------------------------------------------------------
Sub Comleft
 P1 = A
 Set P3.6
 Reset P3.0
 Set P3.4
 Reset P3.4
 Reset P3.6
End Sub

Sub Comright
 P1 = A
 Set P3.1
 Reset P3.0
 Set P3.4
 Reset P3.4
 Reset P3.1
End Sub

Sub Writeleft
 P1 = A
 Set P3.6
 Set P3.0
 Set P3.4
 Reset P3.4
 Reset P3.6
End Sub

Sub Writeright
 P1 = A
 Set P3.1
 Set P3.0
 Set P3.4
 Reset P3.4
 Reset P3.1
End Sub
```

Quality Information

Test Item	Content of Test	Test Condition	Note
High Temperature storage	Endurance test applying the high storage temperature for a long time.	+80°C , 48hrs	2
Low Temperature storage	Endurance test applying the low storage temperature for a long time.	-30°C , 48hrs	1,2
High Temperature Operation	Endurance test applying the electric stress (voltage & current) and the high thermal stress for a long time.	+70°C , 48hrs	2
Low Temperature Operation	Endurance test applying the electric stress (voltage & current) and the low thermal stress for a long time.	-20°C , 48hrs	1,2
High Temperature / Humidity Operation	Endurance test applying the electric stress (voltage & current) and the high thermal with high humidity stress for a long time.	+40°C , 90% RH , 48hrs	1,2
Thermal Shock resistance	Endurance test applying the electric stress (voltage & current) during a cycle of low and high thermal stress.	0°C,30min -> 25°C,5min -> 50°C,30min = 1 cycle 10 cycles	
Vibration test	Endurance test applying vibration to simulate transportation and use.	10-55Hz , 15mm amplitude. 60 sec in each of 3 directions X,Y,Z For 15 minutes	3
Static electricity test	Endurance test applying electric static discharge.	V_S=800V, R_S=1.5kΩ, C_S=100pF 10 Times	

Note 1: No condensation to be observed.
Note 2: Conducted after 4 hours of storage at 25°C, 0%RH.
Note 3: Test performed on product itself, not inside a container.

Precautions for using LCDs/LCMs

See Precautions at www.newhavendisplay.com/specs/precautions.pdf

Warranty Information and Terms & Conditions

http://www.newhavendisplay.com/index.php?main_page=terms

Мы молодая и активно развивающаяся компания в области поставок электронных компонентов. Мы поставляем электронные компоненты отечественного и импортного производства напрямую от производителей и с крупнейших складов мира.

Благодаря сотрудничеству с мировыми поставщиками мы осуществляем комплексные и плановые поставки широчайшего спектра электронных компонентов.

Собственная эффективная логистика и склад в обеспечивает надежную поставку продукции в точно указанные сроки по всей России.

Мы осуществляем техническую поддержку нашим клиентам и предпродажную проверку качества продукции. На все поставляемые продукты мы предоставляем гарантию .

Осуществляем поставки продукции под контролем ВП МО РФ на предприятия военно-промышленного комплекса России , а также работаем в рамках 275 ФЗ с открытием отдельных счетов в уполномоченном банке. Система менеджмента качества компании соответствует требованиям ГОСТ ISO 9001.

Минимальные сроки поставки, гибкие цены, неограниченный ассортимент и индивидуальный подход к клиентам являются основой для выстраивания долгосрочного и эффективного сотрудничества с предприятиями радиоэлектронной промышленности, предприятиями ВПК и научно-исследовательскими институтами России.

С нами вы становитесь еще успешнее!

Наши контакты:

Телефон: +7 812 627 14 35

Электронная почта: sales@st-electron.ru

Адрес: 198099, Санкт-Петербург, Промышленная ул, дом № 19, литера Н, помещение 100-Н Офис 331