Totally Logical

Z89223/273/323/373

16-BIT DIGITAL SIGNAL PROCESSORS WITH A/D CONVERTER

FEATURES

Device	Package	ROM (Kwords)	OTP (Kwords)	Data RAM (Words)	MIPS
Z89223	44-PLCC, 44-PQFP	8		512	20
Z89273	44-PLCC		8	512	20
Z89323	64-TQFP, 68-PLCC, 80-PQFP	8		512	20
Z89373	64-TQFP, 68-PLCC, 80-PQFP		8	512	20

Operating Range

- 5V ±10%
- 0°C to 70°C Standard Temperature
  –40°C to +85°C Extended Temperature

DSP Core

- 16-Bit Fixed Point DSP, 24-Bit ALU and Accumulator
- Single-Cycle Multiply and ALU Operations
- Six-Level Hardware Stack
- Six Data RAM Pointers and Sixteen Program Memory Pointers
- RISC Processor with 30 Instruction Types

On-Chip Peripherals

- 4-Channel, 8-Bit Half-Flash A/D Converter
- Serial Peripheral Interface (SPI)
- Three General-Purpose Counter/Timers
  - Two Pulse Width Modulators (PWM)
  - Two Watch-Dog Timers (WDT)
- Up to 40 Bits of I/O
- PLL System Clock
- Three Vectored Interrupts Servicing Eight Sources
- Low Power Clock Modes with Wake-up Options

GENERAL DESCRIPTION

The Z893x3 products are high-performance Digital Signal Processors (DSP) with a modified Harvard architecture featuring separate program and dual data memory banks. The design is optimized for processing power with a minimum of silicon area.

The Z893x3 16/24-Bit architecture accommodates advanced signal processing algorithms. The operating performance and efficient architecture provide deterministic instruction execution. Compression, filtering, frequency detection, audio, voice detection, speech synthesis, and other vital algorithms can all be implemented.

Six data RAM pointers provide circular buffer capabilities and simultaneous dual operand fetching. Three vectored interrupts are complemented by a six-level stack.

By integrating a high-speed 4-channel, 8-bit A/D, SPI, three Counter/Timers with PWM and WDT support, and up to 40 bits of I/O, the Z893x3 family provides a compact low-cost system solution.

To support a wide variety of development requirements, the Z893x3 DSP product family features the cost-effective Z89223/323 with 8 KWords of ROM. The Z89273/373, an

GENERAL DESCRIPTION (Continued)

OTP version of the Z89223/323, is ideal for prototypes and early production builds.

Throughout this specification, references to the Z893x3 device apply equally to the Z89223/273/323/373, unless otherwise specified.

Notes: All signals with an overline are active Low. For example, in RD/$\overline{WR}$, RD is active High and $\overline{WR}$ is active Low. For I/O ports, P1.3 denotes Port1 bit 3. Pins called NC are "No Connection"—they do not connect any power, grounds, or signals.

Power connections follow conventional descriptions:

Connection	Circuit	Device
Power	V_{CC}	V_{DD}
Ground	GND	V_{SS}

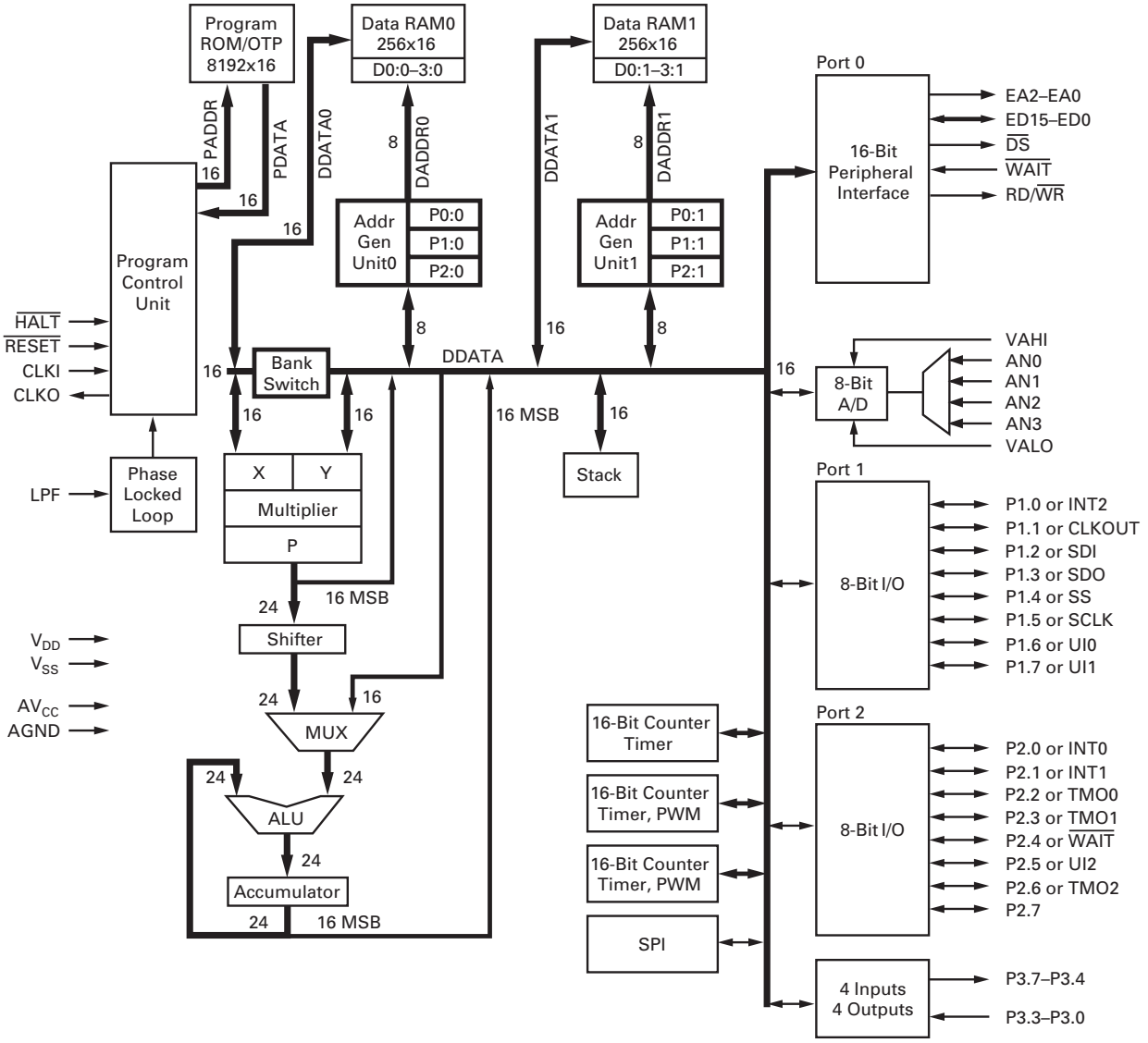

Figure 1. Z892X3/3x3 Functional Block Diagram

External Bus and External Registers. The following is made to clarify naming conventions used in this specification. The external bus and external registers are external to the DSP core, and are used to access internal and external peripherals.

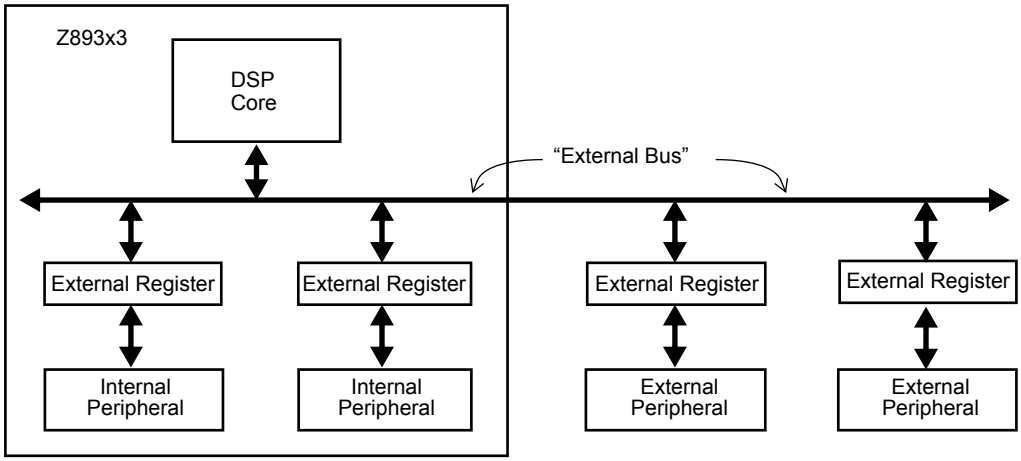

Figure 2. "External" Bus

PIN FUNCTIONS

EA2–EA0. External Address Bus (output, latched). These pins provide the External Register Address. This address bus is driven during both internal and external accesses. One of up to seven user-defined external registers is selected by the processor for reads or writes. EXT7 is always reserved for use by the processor.

ED15–ED0. External Data Bus (input/output). These pins are the data bus for the user-defined external registers, and are shared by Port0. These pins are normally tristated, except when these registers are specified as destination registers in a write instruction to an external peripheral, or when Port0 is enabled for output. This bus uses the control signals RD/$\overline{\text{WR}}$, $\overline{\text{DS}}$, and $\overline{\text{WAIT}}$, and address pins EA2–EA0.

$\overline{\text{DS}}$. Data Strobe (output). This pin provides the data strobe signal for the ED Bus. $\overline{\text{DS}}$ is active for transfers to/from external peripherals only.

RD/$\overline{\text{WR}}$. Read/$\overline{\text{Write}}$ Select (output). This pin controls the data direction signal for the External Data Bus. Data is available from the processor on ED15–ED0 when this signal and $\overline{\text{DS}}$ are both Low.

$\overline{\text{WAIT}}$. Wait State (input). This pin is sampled at the rising edge of the clock with appropriate setup and hold times. A single wait-state can be generated internally by setting the appropriate bits in the wait state register. The user must drive this line if multiple wait states are required. This pin is shared with Port2.

CLKI. Clock (input). This pin is the clock circuit input. It can be driven by a signal or connected to a 32 KHz crystal.

CLKO. Clock (output). This pin is the clock circuit output. It is used for operation with a 32 KHz crystal and the PLL to generate the system clock.

$\overline{\text{HALT}}$. Halt State (input). This pin stops program execution. The processor continuously executes NOPs and the program counter remains constant while this pin is held Low. This pin offers an internal pull-up.

$\overline{\text{RESET}}$. Reset (input). This pin resets the processor. It pushes the contents of the Program Counter (PC) onto the stack and then fetches a new PC value from program memory address 0FFCH after the $\overline{\text{RESET}}$ signal is released. The Status register is set to all zeros. At power-up RAM and other registers are undefined, however, they are left unchanged with subsequent resets. $\overline{\text{RESET}}$ can be asserted asynchronously.

AN0–AN3. Analog Inputs (input). These are the analog input pins. The analog input signal should be between VALO and VAHI for accurate conversions.

VAHI. Analog High Reference Voltage (input). This pin provides the reference for the full scale voltage of the analog input signals.

VALO. Analog Low Reference Voltage (input). This pin provides the reference for the zero voltage of the analog input signals.

AV_{CC}–AGND. Filtered Analog Power and Ground must be provided on separate pins to reduce digital noise in the analog circuits.

Multifunction Pins. The Z89223/273/323/373 DSP family offers a user-configurable I/O structure, which means that most of the I/O pins offer dual functions. The function, direction (input or output), and for output, the characteristics (push-pull or open drain) are all under user-control, by programming the configuration registers appropriately as described in the I/O Ports section. The following share I/O Port pins:

INT0–INT2. External Interrupts (input, edge-triggered). These pins provide three of the eight interrupt sources to the Interrupt Controller. Each is programmable to be rising-edge or falling-edge triggered. The other five interrupt sources are from the on-chip peripherals.

CLKOUT. System Clock (output). This pin provides access to the internal processor clock.

SDI. Serial Data In (input). This pin is the SPI serial data input.

SDO. Serial Data Out (output). This pin is the SPI serial data output.

SS. Slave Select (input). This pin is used in SPI Slave Mode only. SS advises the SPI that it is the target of a serial transfer from an external Master.

SCLK. SPI Clock (output/input). This pin is an output in Master mode and an input in Slave mode.

UI0, UI1. User inputs (input). These general-purpose input pins are directly tested by the conditional branch instructions. They can also be read as bits in the status register. These are asynchronous input signals that require no special clock synchronization. Counter/Timer0 and Counter/Timer1 may use either of these pins as input.

UI2. User Input (input). This pin is the input to Counter/Timer 2.

TMO0/UO0. Counter/Timer Output or User Output 0 (output). Counter/Timer 0 and Counter/Timer 1 can be programmed to provide output on this pin. When User Outputs are enabled, and the Counter/Timer is disabled, this pin provides the complement of Status Register bit 5.

TMO1/UO1. Counter/Timer Output or User Output 1 (output). Counter/Timer 0 and Counter/Timer 1 can be programmed to provide output on this pin. When User Outputs are enabled, and the Counter/Timer is disabled, this pin provides the complement of Status Register bit 6.

TMO2. Counter/Timer 2 Output (output). This pin is the output of Counter/Timer 2

P0.15–P0.0. Port0 (input/output). This is a 16-bit user I/O port. Bits can be configured as input or output or globally as open-drain output. When enabled, Port0 uses the 16 data lines of the ED bus. The function of these pins can be dynamically changed by writing to the Port0 configuration registers. The High byte can also be configured to Port1 as described in the I/O Port section.

P1.7–P1.0. Port1 (input/output). These pins are Port1 inputs or outputs when not configured for use as special purpose peripheral interface. The following eight pin functions preempt use of these pins when enabled. INT2, CLKOUT, SDI, SDO, SS, SCLK, UI0, UI1.

Note: These pins are not bonded out on the 44-pin packages.

P2.7–P2.0. Port2 (input/output). These pins are Port2 inputs or outputs when not configured as peripheral interfaces. The following seven pin functions preempt use of P2.6–P2.0 when enabled. INT0, INT1, TMO0/UO0, TMO1/UO1, $\overline{\text{WAIT}}$, UI2, TMO2. P2.7 does not include a dual function.

Note: P2.7–P2.5 are not bonded out on the 44-pin packages.

The following port pins are available only on the 80-pin package:

P3.7–P3.4. Port3 (output). These pins are Port3 outputs.

P3.3–P3.0. Port3 (input). These pins are Port3 inputs.

PIN CONFIGURATIONS

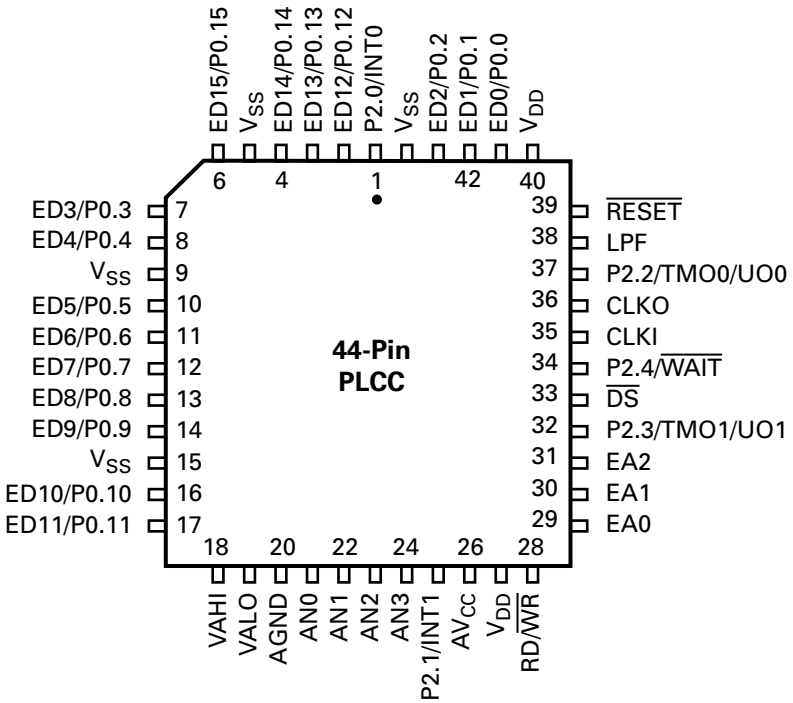

Figure 3. 44-Pin PLCC Z89223/273 Pin Configuration

Table 1. 44-Pin PLCC Z89223/273 Pin Description

No	Symbol	Function	Direction	No	Symbol	Function	Direction
1	P2.0/INT0	Port 2.0/Interrupt 0	Input/Output	23	AN2	A/D Input 2	Input
2	ED12/P0.12	External Data Bus/Port0	Input/Output	24	AN3	A/D Input 3	Input
3	ED13/P0.13	External Data Bus/Port0	Input/Output	25	P2.1/INT1	Port 2.1/Interrupt 1	Input/Output
4	ED14/P0.14	External Data Bus/Port0	Input/Output	26	AV_{CC}	Analog Power	
5	V_{SS}	Ground		27	V_{DD}	Power Supply	
6	ED15/P0.15	External Data Bus/Port0	Input/Output	28	RD/$\overline{WR}$	R/W External Bus	Output
7	ED3/P0.3	External Data Bus/Port0	Input/Output	29	EA0	Ext Address 0	Output
8	ED4/P0.4	External Data Bus/Port0	Input/Output	30	EA1	Ext Address 1	Output
9	V_{SS}	Ground		31	EA2	Ext Address 2	Output
10	ED5/P0.5	External Data Bus/Port0	Input/Output	32	P2.3/TMO1	Port 2.3/Timer Output 1	Input/Output
11	ED6/P0.6	External Data Bus/Port0	Input/Output	33	$\overline{DS}$	Ext Data Strobe	Output
12	ED7/P0.7	External Data Bus/Port0	Input/Output	34	P2.4/$\overline{WAIT}$	Port 2.4/Wait for ED	Input/Output
13	ED8/P0.8	External Data Bus/Port0	Input/Output	35	CLKI	Clock/Crystal In	Input
14	ED9/P0.9	External Data Bus/Port0	Input/Output	36	CLKO	Clock/Crystal Out	Output
15	V_{SS}	Ground		37	P2.2/TMO0	Port 2.2/Timer Output 0	Input/Output
16	ED10/P0.10	External Data Bus/Port0	Input/Output	38	LPF	PLL Low Pass Filter	Input
17	ED11/P0.11	External Data Bus/Port0	Input/Output	39	$\overline{RESET}$	Reset	Input
18	VAHI	Analog High Ref. Voltage	Input	40	V_{DD}	Power	
19	VALO	Analog Low Ref. Voltage	Input	41	ED0/P0.0	External Data Bus/Port0	Input/Output
20	AGND	Analog Ground		42	ED1/P0.1	External Data Bus/Port0	Input/Output
21	AN0	A/D Input 0	Input	43	ED2/P0.2	External Data Bus/Port0	Input/Output
22	AN1	A/D Input 1	Input	44	V_{SS}	Ground	

PIN CONFIGURATIONS (Continued)

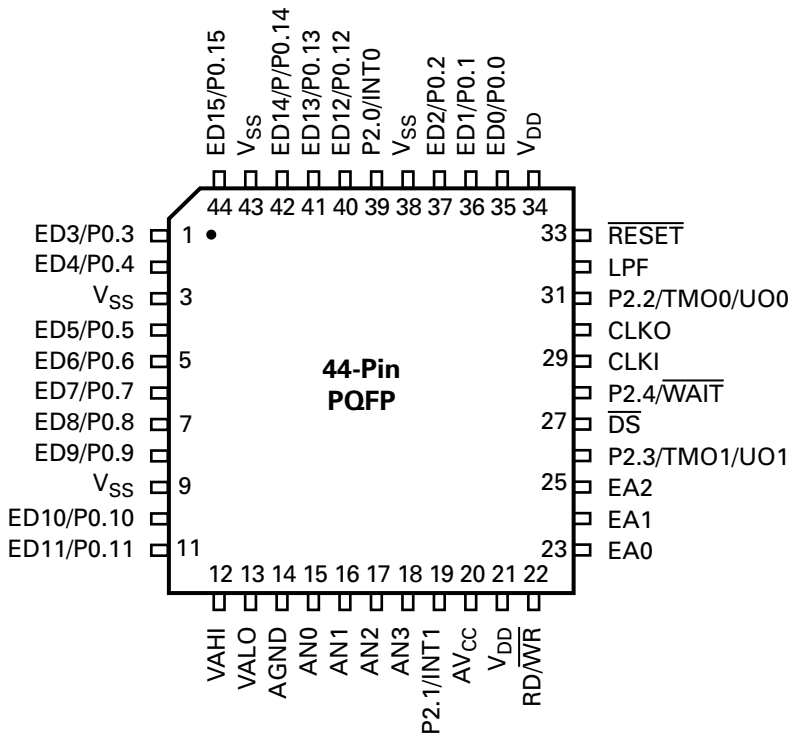

Figure 4. 44-Pin PQFP Z89223/273 Pin Configuration

Table 2. 44-Pin PQFP Z89223/273 Pin Description

No	Symbol	Function	Direction	No	Symbol	Function	Direction
1	ED3/P0.3	External Data Bus/Port0	Input/Output	23	EA0	Ext Address 0	Output
2	ED4/P0.4	External Data Bus/Port0	Input/Output	24	EA1	Ext Address 1	Output
3	V_{SS}	Ground		25	EA2	Ext Address 2	Output
4	ED5/P0.5	External Data Bus/Port0	Input/Output	26	P2.3/TMO1	Port 2.3/Timer Output 1	Input/Output
5	ED6/P0.6	External Data Bus/Port0	Input/Output	27	$\overline{DS}$	Ext Data Strobe	Output
6	ED7/P0.7	External Data Bus/Port0	Input/Output	28	P2.4/$\overline{WAIT}$	Port 2.4/Wait for ED	Input/Output
7	ED8/P0.8	External Data Bus/Port0	Input/Output	29	CLKI	Clock/Crystal In	Input
8	ED9/P0.9	External Data Bus/Port0	Input/Output	30	CLKO	Clock/Crystal Out	Output
9	V_{SS}	Ground		31	P2.2/TMO0	Port 2.2/Timer Output 0	Input/Output
10	ED10/P0.10	External Data Bus/Port0	Input/Output	32	LPF	PLL Low Pass Filter	Input
11	ED11/P0.11	External Data Bus/Port0	Input/Output	33	$\overline{RESET}$	Reset	Input
12	VAHI	Analog High Ref. Voltage	Input	34	V_{DD}	Power Supply	
13	VALO	Analog Low Ref. Voltage	Input	35	ED0/P0.0	External Data Bus/Port0	Input/Output
14	AGND	Analog Ground		36	ED1/P0.1	External Data Bus/Port0	Input/Output
15	AN0	A/D Input 0	Input	37	ED2/P0.2	External Data Bus/Port0	Input/Output
16	AN1	A/D Input 1	Input	38	V_{SS}	Ground	
17	AN2	A/D Input 2	Input	39	P2.0/INT0	Port 2.0/Interrupt 0	Input/Output
18	AN3	A/D Input 3	Input	40	ED12/P0.12	External Data Bus/Port0	Input/Output
19	P2.1/INT1	Port 2.1/Interrupt 1	Input/Output	41	ED13/P0.13	External Data Bus/Port0	Input/Output
20	AV_{CC}	Analog Power		42	ED14/P0.14	External Data Bus/Port0	Input/Output
21	V_{DD}	Power		43	V_{SS}	Ground	
22	RD/$\overline{WR}$	R/W Exteral Output Bus		44	ED15/P0.15	External Data Bus/Port0	Input/Output

PIN CONFIGURATIONS (Continued)

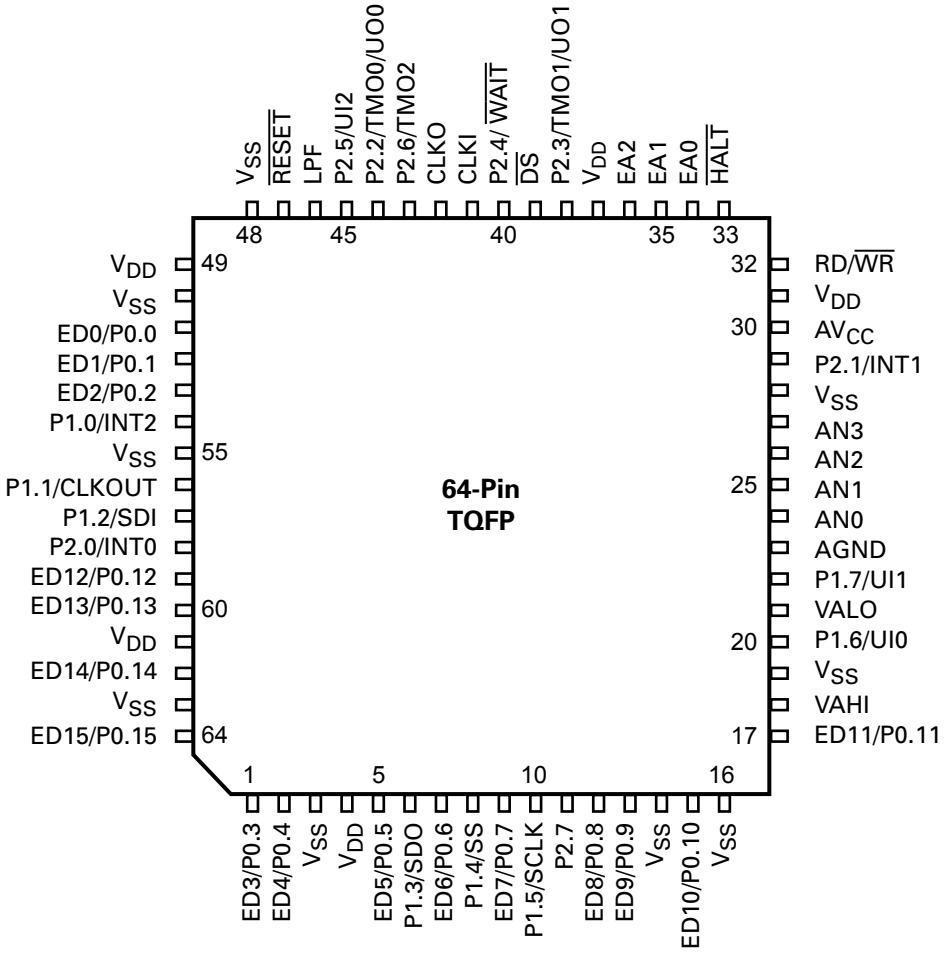

Figure 5. 64-Pin TQFP Z89323/373 Pin Configuration

Table 3. 64-Pin TQFP Z89223/273 Pin Description

No	Symbol	Function	Direction	No	Symbol	Function	Direction
1	ED3/P0.3	External Data Bus/Port0	Input/Output	33	$\overline{HALT}$	Halt Execution	Input
2	ED4/P0.4	External Data Bus/Port0	Input/Output	34	EA0	Ext Address 0	Output
3	V_{SS}	Ground		35	EA1	Ext Address 1	Output
4	V_{DD}	Power Supply		36	EA2	Ext Address 2	Output
5	ED5/P0.5	External Data Bus/Port0	Input/Output	37	V_{DD}	Power Supply	
6	P1.3/SDO	Port 1.3/Serial Output	Input/Output	38	P2.3/TMO1	Port2.3/Timer Output 1	Input/Output
7	ED6/P0.6	External Data Bus/Port0	Input/Output	39	$\overline{DS}$	Ext Data Strobe	Output
8	P1.4/SS	Port 1.4/Slave Select	Input/Output	40	P2.4/$\overline{WAIT}$	Port 2.4/Wait for ED	Input/Output
9	ED7/P0.7	External Data Bus/Port0	Input/Output	41	CLKI	Clock/Crystal In	Input
10	P1.5/SCLK	Port 1.5/Serial Clock	Input/Output	42	CLKO	Clock/Crystal Out	Output
11	P2.7	Port 2.7	Input/Output	43	P2.6/TMO2	Port 2.6/Timer Output 2	Input/Output
12	ED8/P0.8	External Data Bus/Port0	Input/Output	44	P2.2/TMO0	Port 2.2/Timer Output 0	Input/Output
13	ED9/P0.9	External Data Bus/Port0	Input/Output	45	P2.5/UI2	Port 2.5/User Input 2	Input/Output
14	V_{SS}	Ground		46	LPF	PLL Low Pass Filter	Input
15	ED10/P0.10	External Data Bus/Port0	Input/Output	47	$\overline{RESET}$	Reset	Input
16	V_{SS}	Ground		48	V_{SS}	Ground	
17	ED11/P0.11	External Data Bus/Port0	Input/Output	49	V_{DD}	Power Supply	
18	VAHI	Analog High Ref. Voltage	Input	50	V_{SS}	Ground	
19	V_{SS}	Ground		51	ED0/P0.0	External Data Bus/Port0	Input/Output
20	P1.6/UI0	Port 1.6/User Input 0	Input/Output	52	ED1/P0.1	External Data Bus/Port0	Input/Output
21	VALO	Analog Low Ref. Voltage	Input	53	ED2/P0.2	External Data Bus/Port0	Input/Output
22	P1.7/UI1	Port 1.7/User Input 1	Input/Output	54	P1.0/INT2	Port 1.0/Interrupt 2	Input/Output
23	AGND	Analog Ground		55	V_{SS}	Ground	
24	AN0	A/D Input 0	Input	56	P1.1/CLKOUT	Port 1.1/Clock Output	Input/Output
25	AN1	A/D Input 1	Input	57	P1.2/SDI	Port 1.2/Serial Input	Input/Output
26	AN2	A/D Input 2	Input	58	P2.0/INT0	Port 2.0/Interrupt 0	Input/Output
27	AN3	A/D Input 3	Input	59	ED12/P0.12	External Data Bus/Port0	Input/Output
28	V_{SS}	Ground		60	ED13/P0.13	External Data Bus/Port0	Input/Output
29	P2.1/INT1	Port 2.1/Interrupt 1	Input/Output	61	V_{DD}	Power Supply	
30	AVCC	Analog Power		62	ED14/P0.14	External Data Bus/Port0	Input/Output
31	V_{DD}	Power Supply		63	V_{SS}	Ground	
32	RD/$\overline{WR}$	R/W External Bus	Output	64	ED15/P0.15	External Data Bus/Port0	Input/Output

PIN CONFIGURATIONS (Continued)

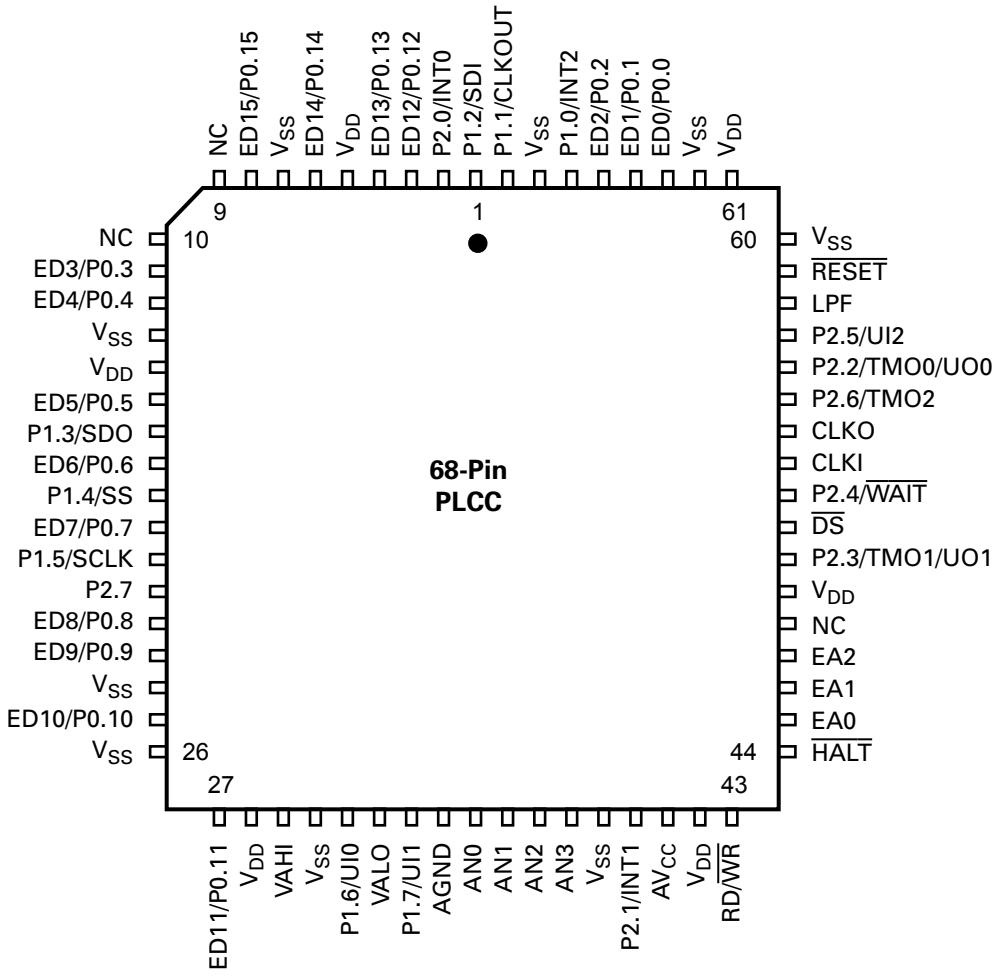

Figure 6. 68-Pin PLCC Z89323/373 Pin Configuration

Table 4. 68-Pin PLCC Z89323/373 Pin Description

No	Symbol	Function	Direction	No	Symbol	Function	Direction
1	P1.2/SDI	Port 1.2/Serial Input	Input/Output	35	AN0	A/D Input 0	Input
2	P2.0/INT0	Port 2.0/Interrupt 0	Input/Output	36	AN1	A/D Input 1	Input
3	ED12/P0.12	External Data Bus/Port0	Input/Output	37	AN2	A/D Input 2	Input
4	ED13/P0.13	External Data Bus/Port0	Input/Output	38	AN3	A/D Input 3	Input
5	V_{DD}	Power Supply		39	V_{SS}	Ground	
6	ED14/P0.14	External Data Bus/Port0	Input/Output	40	P2.1/INT1	Port 2.1/Interrupt 1	Input/Output
7	V_{SS}	Ground		41	AVCC	Analog Power	
8	ED15/P0.15	External Data Bus/Port0	Input/Output	42	V_{DD}	Power Supply	
9	NC	No Connection		43	RD/$\overline{WR}$	R/W External Bus	Output
10	NC	No Connection		44	$\overline{HALT}$	Halt Execution	Input
11	ED3/P0.3	External Data Bus/Port0	Input/Output	45	EA0	Ext Address 0	Output
12	ED4/P0.4	External Data Bus/Port0	Input/Output	46	EA1	Ext Address 1	Output
13	V_{SS}	Ground		47	EA2	Ext Address 2	Output
14	V_{DD}	Power Supply		48	NC	No Connection	
15	ED5/P0.5	External Data Bus/Port0	Input/Output	49	V_{DD}	Power Supply	
16	P1.3/SDO	Port 1.3/Serial Output	Input/Output	50	P2.3/TMO1	Port2.3/Timer Output 1	Input/Output
17	ED6/P0.6	External Data Bus/Port0	Input/Output	51	$\overline{DS}$	Ext Data Strobe	Output
18	P1.4/SS	Port 1.4/Slave Select	Input/Output	52	P2.4/$\overline{WAIT}$	Port 2.4/Wait for ED	Input/Output
19	ED7/P0.7	External Data Bus/Port0	Input/Output	53	CLKI	Clock/Crystal In	Input
20	P1.5/SCLK	Port 1.5/Serial Clock	Input/Output	54	CLKO	Clock/Crystal Out	Output
21	P2.7	Port 2.7	Input/Output	55	P2.6/TMO2	Port 2.6/Timer Output 2	Input/Output
22	ED8/P0.8	External Data Bus/Port0	Input/Output	56	P2.2/TMO0	Port 2.2/Timer Output 0	Input/Output
23	ED9/P0.9	External Data Bus/Port0	Input/Output	57	P2.5/UI2	Port 2.5/User Input 2	Input/Output
24	V_{SS}	Ground		58	LPF	PLL Low Pass Filter	Input
25	ED10/P0.10	External Data Bus/Port0	Input/Output	59	$\overline{RESET}$	Reset	Input
26	V_{SS}	Ground		60	V_{SS}	Ground	
27	ED11/P0.11	External Data Bus/Port0	Input/Output	61	V_{DD}	Power Supply	
28	V_{DD}	Power Supply		62	V_{SS}	Ground	
29	VAHI	Analog High Ref. Voltage	Input	63	ED0/P0.0	External Data Bus/Port0	Input/Output
30	V_{SS}	Ground		64	ED1/P0.1	External Data Bus/Port0	Input/Output
31	P1.6/UI0	Port 1.6/User Input 0	Input/Output	65	ED2/P0.2	External Data Bus/Port0	Input/Output
32	VALO	Analog Low Ref. Voltage	Input	66	P1.0/INT2	Port 1.0/Interrupt 2	Input/Output
33	P1.7/UI1	Port 1.7/User Input 1	Input/Output	67	V_{SS}	Ground	
34	AGND	Analog Ground		68	P1.1/CLKOUT	Port 1.1/Clock Output	Input/Output

PIN CONFIGURATIONS (Continued)

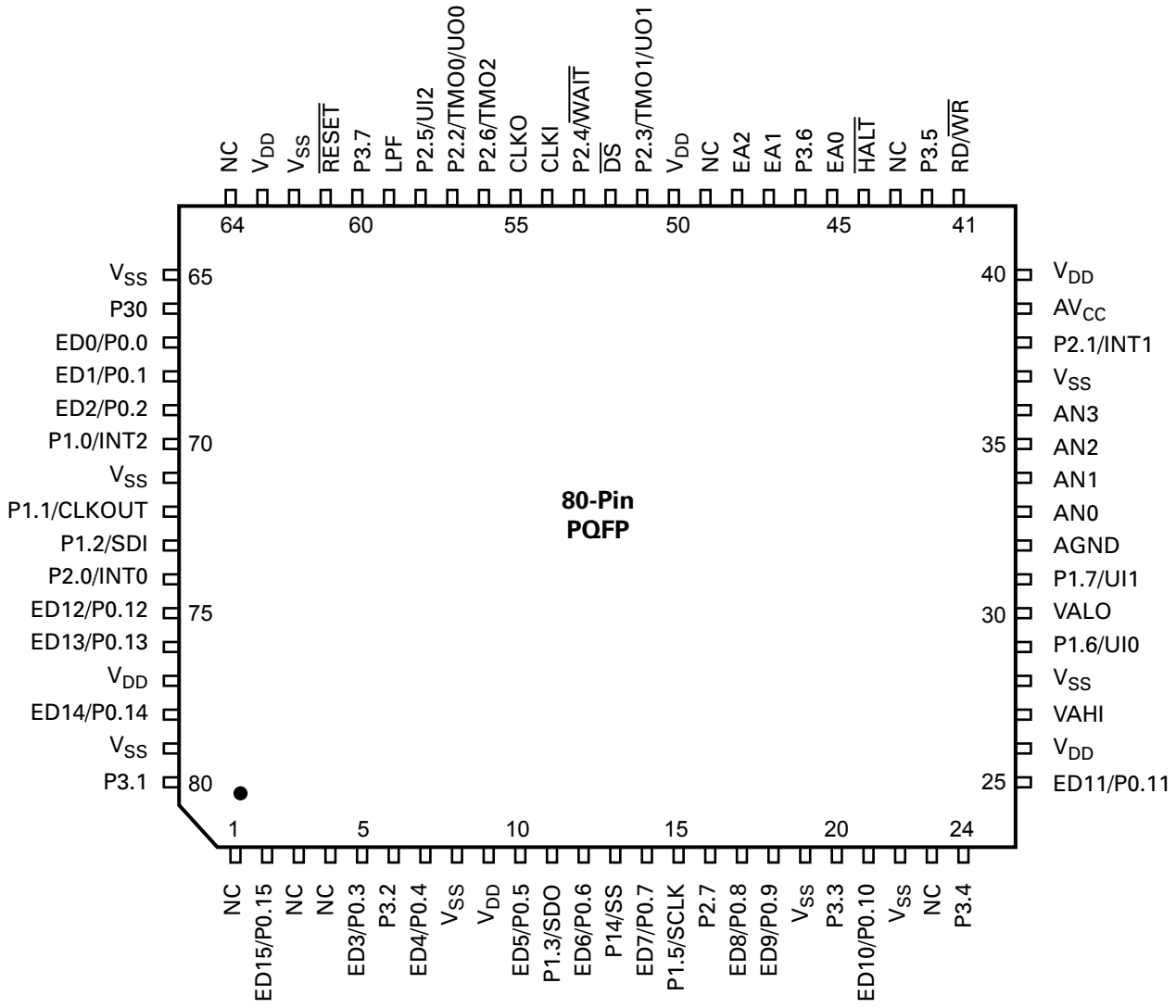

Figure 7. 80-Pin PQFP Z89323/373 Pin Configuration

Table 5. 80-Pin PQFP Z89323/373 Pin Description

No	Symbol	Function	Direction	No	Symbol	Function	Direction
1	NC	No Connection		41	RD/$\overline{WR}$	R/W External Bus	Output
2	ED15/P0.15	External Data Bus/Port0	Input/Output	42	P3.5	Port 3.5	Output
3	NC	No Connection		43	NC	No Connection	
4	NC	No Connection		44	$\overline{HALT}$	Halt Execution	Input
5	ED3/P0.3	External Data Bus/Port0	Input/Output	45	EA0	Ext Address 0	Output
6	P3.2	Port 3.2	Input	46	P3.6	Port 3.6	Output
7	ED4/P0.4	External Data Bus/Port0	Input/Output	47	EA1	Ext Address 1	Output
8	V_{SS}	Ground		48	EA2	Ext Address 2	Output
9	V_{DD}	Power Supply		49	NC	No Connection	
10	ED5/P0.5	External Data Bus/Port0	Input/Output	50	V_{DD}	Power Supply	
11	P1.3/SDO	Port 1.3/Serial Output	Input/Output	51	P2.3/TMO1	Port 2.3/Timer Output 1	Input/Output
12	ED6/P0.6	External Data Bus/Port0	Input/Output	52	$\overline{DS}$	Ext Data Strobe	Output
13	P1.4/SS	Port 1.4/Slave Select	Input/Output	53	P2.4/$\overline{WAIT}$	Port 2.4/Wait for ED	Input/Output
14	ED7/P0.7	External Data Bus/Port0	Input/Output	54	CLKI	Clock/Crystal In	Input
15	P1.5/SCLK	Port 1.5/Serial Clock	Input/Output	55	CLKO	Clock/Crystal Out	Output
16	P2.7	Port 2 7	Input/Output	56	P2.6/TMO2	Port 2.6/Timer Output 2	Input/Output
17	ED8/P0.8	External Data Bus/Port0	Input/Output	57	P2.2/TMO0	Port 2.2/Timer Output 0	Input/Output
18	ED9/P0.9	External Data Bus/Port0	Input/Output	58	P2.5/UI2	Port 2.5/User Input 2	Input/Output
19	V_{SS}	Ground		59	LPF	PLL Low Pass Filter	Input
20	P3.3	Port 3 3	Input	60	P3.7	Port 3.7	Output
21	ED10/P0.10	External Data Bus/Port0	Input/Output	61	$\overline{RESET}$	Reset	Input
22	V_{SS}	Ground		62	V_{SS}	Ground	
23	NC	No Connection		63	V_{DD}	Power Supply	
24	P3.4	Port 3.4	Output	64	NC	No Connection	
25	ED11/P0.11	External Data Bus/Port0	Input/Output	65	V_{SS}	Ground	
26	V_{DD}	Power Supply		66	P3.0	Port 3.0	Input
27	VAHI	Analog High Ref. Voltage	Input	67	ED0/P0.0	External Data Bus/Port0	Input/Output
28	V_{SS}	Ground		68	ED1/P0.1	External Data Bus/Port0	Input/Output
29	P1.6/UI0	Port 1 6/User Input 0	Input/Output	69	ED2/P0.2	External Data Bus/Port0	Input/Output
30	VALO	Analog Low Ref. Voltage	Input	70	P1.0/INT2	Port 1.0/Interrupt 2	Input/Output
31	P1.7/UI1	Port 1 7/User Input 1	Input/Output	71	V_{SS}	Ground	
32	AGND	Analog Ground		72	P1.1/CLKOUT	Port 1.1/Clock Output	Input/Output
33	AN0	A/D Input 0	Input	73	P1.2/SDI	Port 1.2/Serial Input	Input/Output
34	AN1	A/D Input 1	Input	74	P2.0/INT0	Port 2.0/Interrupt 0	Input/Output
35	AN2	A/D Input 2	Input	75	ED12/P0.12	External Data Bus/Port0	Input/Output
36	AN3	A/D Input 3	Input	76	ED13/P0.13	External Data Bus/Port0	Input/Output
37	V_{SS}	Ground		77	V_{DD}	Power Supply	
38	P2.1/INT1	Port 2.1/Interrupt 1	Input/Output	78	ED14/P0.14	External Data Bus/Port0	Input/Output
39	AV_{CC}	Analog Power		79	V_{SS}	Ground	
40	V_{DD}	Power Supply		80	P3.1	Port 3.1	Input

ABSOLUTE MAXIMUM RATINGS

Symbol	Description	Min	Max	Units
V_{CC}	Supply Voltage	–0.3	7.0	V
T_{STG}	Storage Temperature	–65	150	°C
T_A	Ambient Operating Temperature			
	"S" device	0	70	°C
	"E" device	–40	85	°C

Stresses greater than those listed under Absolute Maximum Ratings may cause permanent damage to the device. This rating is a stress rating only; operation of the device at any condition above those indicated in the operational sections of these specifications is not implied. Exposure to absolute maximum rating conditions for extended period may affect device reliability.

STANDARD TEST CONDITIONS

The characteristics listed below apply for standard test conditions as noted. All voltages are referenced to Ground. Positive current flows into the referenced pin.

Positive current $I_{(+)}$ flows in to the referenced pin.

Negative current $I_{(-)}$ flows out of the referenced pin.

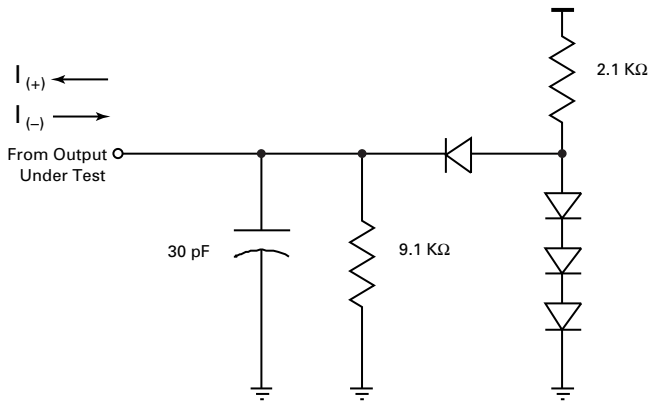

Figure 8. Test Load Diagram

DC ELECTRICAL CHARACTERISTICS

Table 6. ROM Version: V_{DD} = 5V ±10%, T_A = 0°C to +70°C for "S" temperature range T_A = –40°C to +85°C for "E" temperature range, unless otherwise noted; IDD measured with peripherals disabled

Symbol	Parameter	Condition	Min	Typical	Max
$I_{DD–PLL}$	Supply Current using PLL	V_{DD} = 5.0V, 20 MHz		60mA	66mA
$I_{DD–ECD}$	Supply Current using External Clock Direct	V_{DD} = 5.0V, 20 MHz		55 mA	61mA
$I_{DD–XOD}$	Supply Current using XTAL Oscillator Direct	V_{DD} = 5.0V, 32-kHz XTAL		250µA	275µA
$I_{DD–DEEP}$	Supply Current during Deep Sleep	V_{DD} = 5.0V, 32kHz XTAL		175µA	193µA
V_{IH}	Input High Level		2.7V		
V_{IL}	Input Low Level				0.8V
I_L	Input Leakage		-10µA		10µA
V_{OH}	Output High Voltage	I_{OH} = –100 µA	V_{DD}–0.2V		
		I_{OH} = –160 µA	2.4V		
V_{OL}	Output Low Voltage	I_{OL} = 1.6 mA			0.4V
		I_{OL} = 2.0 mA			0.5V
I_{FL}	Output Floating Leakage Current		-10µA		10µA

Table 7. OTP Version: V_{DD} = 5V ±10%, T_A = 0°C to +70°C for "S" temperature range T_A = –40°C to +85°C for "E" temperature range, unless otherwise noted; IDD measured with peripherals disabled

Symbol	Parameter	Condition	Min	Typical	Max
$I_{DD–PLL}$	Supply Current using PLL	V_{DD} = 5.0V, 20 MHz		78mA	86mA
$I_{DD–ECD}$	Supply Current using External Clock Direct	V_{DD} = 5.0V, 20 MHz		75mA	83mA
$I_{DD–XOD}$	Supply Current using XTAL Oscillator Direct	V_{DD} = 5.0V, 32-kHz XTAL		17mA	19mA
$I_{DD–DEEP}$	Supply Current during Deep Sleep	V_{DD} = 5.0V, 32kHz XTAL		17mA	19mA
V_{IH}	Input High Level		2.7V		
V_{IL}	Input Low Level				0.8V
I_L	Input Leakage		-10µA		10µA
V_{OH}	Output High Voltage	I_{OH} = –100 µA	V_{DD}–0.2V		
		I_{OH} = –160 µA	2.4V		
V_{OL}	Output Low Voltage	I_{OL} = 1.6 mA			0.4V
		I_{OL} = 2.0 mA			0.5V
I_{FL}	Output Floating Leakage Current		-10µA		10µA

DC ELECTRICAL CHARACTERISTICS (Continued)

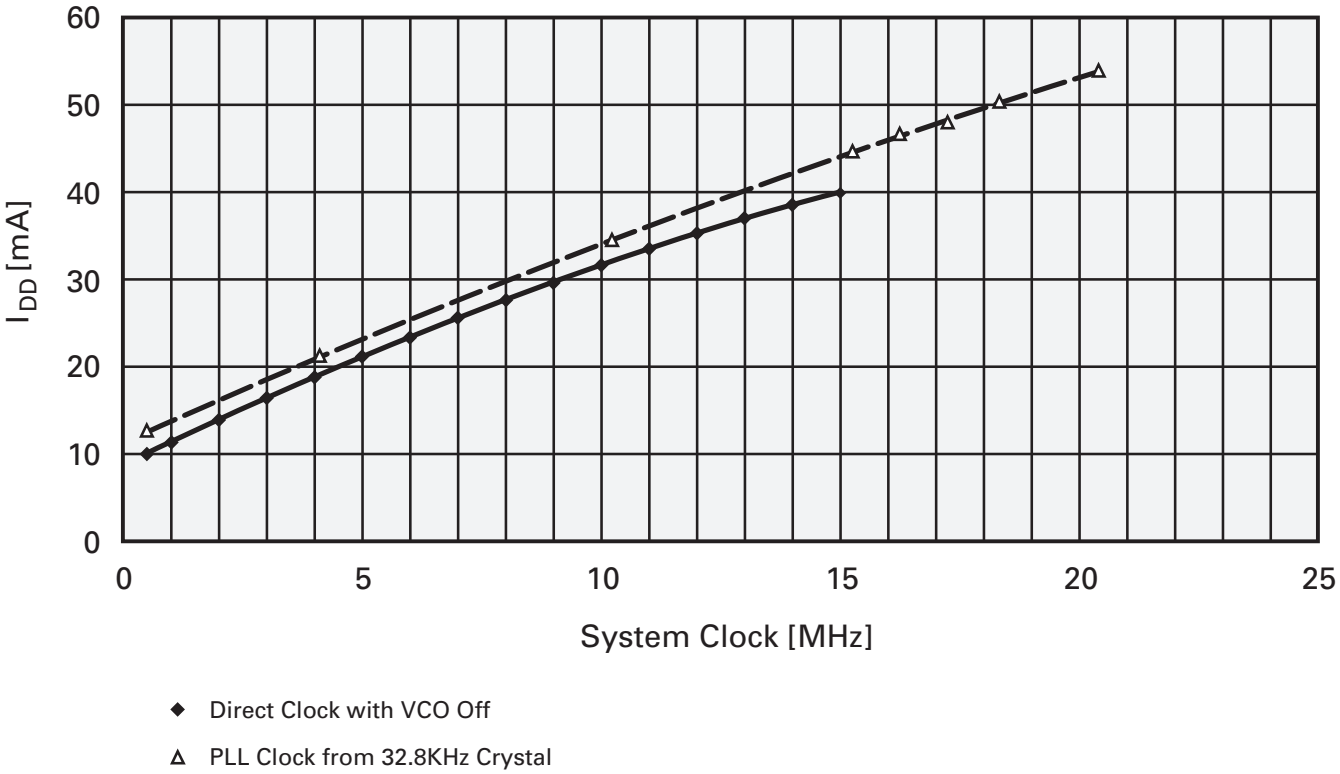

Figure 9. Z89373 Typical OTP Current Consumption

AC ELECTRICAL CHARACTERISTICS

Table 8. V_{DD}= 5V ±10%, T_A = 0°C to +70°C for "S" Temperature Range T_A = –40°C to +85°C for "E" temperature range, unless otherwise noted

Symbol	Parameter	Min [ns]	Max [ns]
Clock			
TCY	CLKI Cycle Time for user-supplied clock	50	31250
CPWH	CLKI Pulse Width High	21	
CPWL	CLKI Pulse Width Low	21	
Tr	CLKI Rise Time for 20-MHz user-supplied clock		2
Tf	CLKI Fall Time for 20-MHz user-supplied clock		2
External Peripheral Bus			
EASET	EA Setup Time to $\overline{DS}$ Fall	10	
EAHOLD	EA Hold Time from $\overline{DS}$ Rise	4	
RWSET	Read/Write Setup Time to $\overline{DS}$ Fall	10	
RWHOLD	Read/Write Hold Time from $\overline{DS}$ Rise	0	
RDSET	Data Read Setup Time to $\overline{DS}$ Rise	15	
RDHOLD	Data Read Hold Time from $\overline{DS}$ Rise	0	
WRVALID	Data Write Valid Time from $\overline{DS}$ Fall		5
WRHOLD	Data Write Hold Time from $\overline{DS}$ Rise	2	
Reset			
RRISE	Reset Rise Time		20 TCY
RWIDTH	Reset Low Pulse Width	2 TCY	
Interrupt			
IWIDTH	Interrupt Pulse Width	1TCY	
Halt			
HWIDTH	Halt Low Pulse Width	3 TCY	
Wait State			
WLAT	Wait Latency Time from $\overline{DS}$ Fall		7
WDEA	Wait Deassert Setup Time to CLKOUT Rise	TBD	
SPI			
SDI–SCLK	Serial Data In to Serial Clock Setup Time	10	
SCLK–SDO	Serial Clock to Serial Data Out Valid	15	
SS–SCLK	Slave Select to Serial Clock Setup Time	1/2 SCLK Period	
SS–SDO	Slave Select to Serial Data Out Valid	15	
SCLK–SDI	Serial Clock to Serial Data In Hold Time	10	

8-BIT ANALOG/DIGITAL CONVERTER

Table 9. AV_{CC}–AGND = 5V ±10%
T_A = 0°C to +70°C for "S" temperature range, unless otherwise noted

Parameter	Min	Typ	Max	Units
Integral Nonlinearity (INL)		0.5	1	LSB
Differential Nonlinearity (DNL)		0.5	1	LSB
Zero Offset Error		2	3	LSB
Full Scale Offset Error		2	3	LSB
Valid Input Signal Range	VALO		VAHI	V
Input Capacitance		33	40	pF
Conversion Time	2	3		µs
Input Impedance 500kSPS 100kSPS 44kSPS		 10 48 110		 kΩ kΩ kΩ
VAHI	VALO + 2.5		AV_{CC}	V
VALO	AGND		AV_{CC}–2.5	V
VAHI–VALO	2.5		AV_{CC}	V
Reference Ladder Resistance VAHI to VALO		5		kΩ
Power Dissipation		50	85	mW

Table 10. AV_{CC}–AGND = 5V ±10%
T_A = –40°C to +85°C for "E" temperature range, unless otherwise noted

Parameter	Min	Typ	Max	Units
Integral Nonlinearity (INL)			1	LSB
Differential Nonlinearity (DNL)			1	LSB
Zero Offset Error		3	4	LSB
Full Scale Offset Error		3	4	LSB
Valid Input Signal Range	VALO		VAHI	V
Input Capacitance		33	40	pF
Conversion Time	2	3		µs
Input Impedance 500kSPS 100kSPS 44kSPS		 10 48 110		 kΩ kΩ kΩ
VAHI	VALO + 2.5		AV_{CC}	V
VALO	AGND		AV_{CC}–2.5	V
VAHI–VALO	2.5		AV_{CC}	V
Reference Ladder Resistance VAHI to VALO		5		kΩ
Power Dissipation			85	mW

TIMING DIAGRAMS

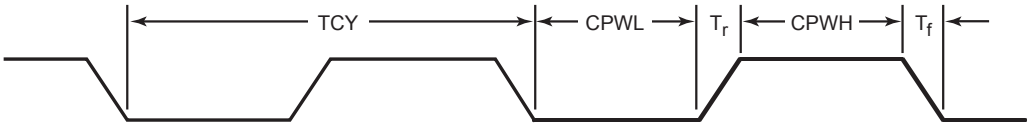

Figure 10. Clock Timing

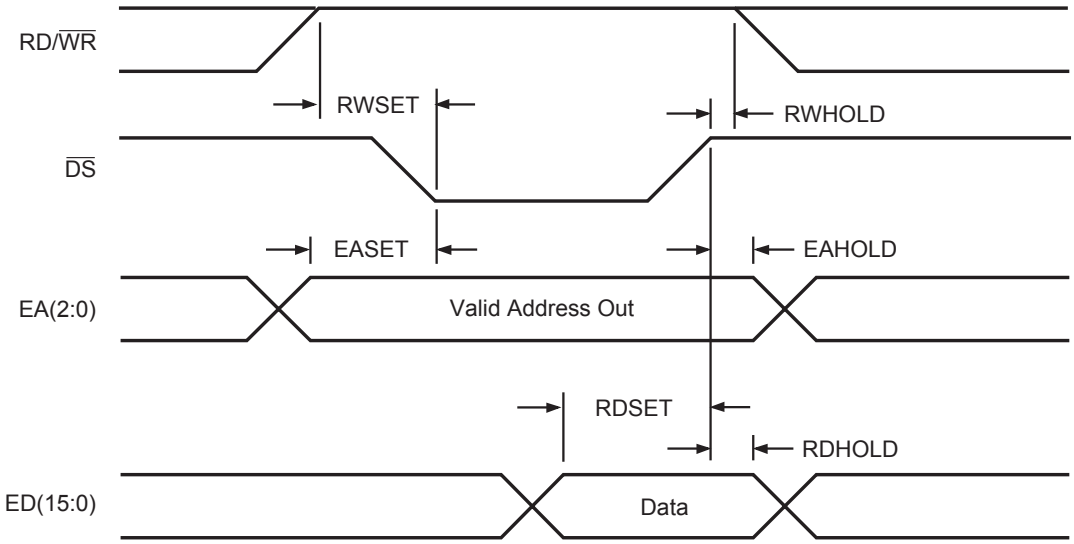

Figure 11. Read Timing

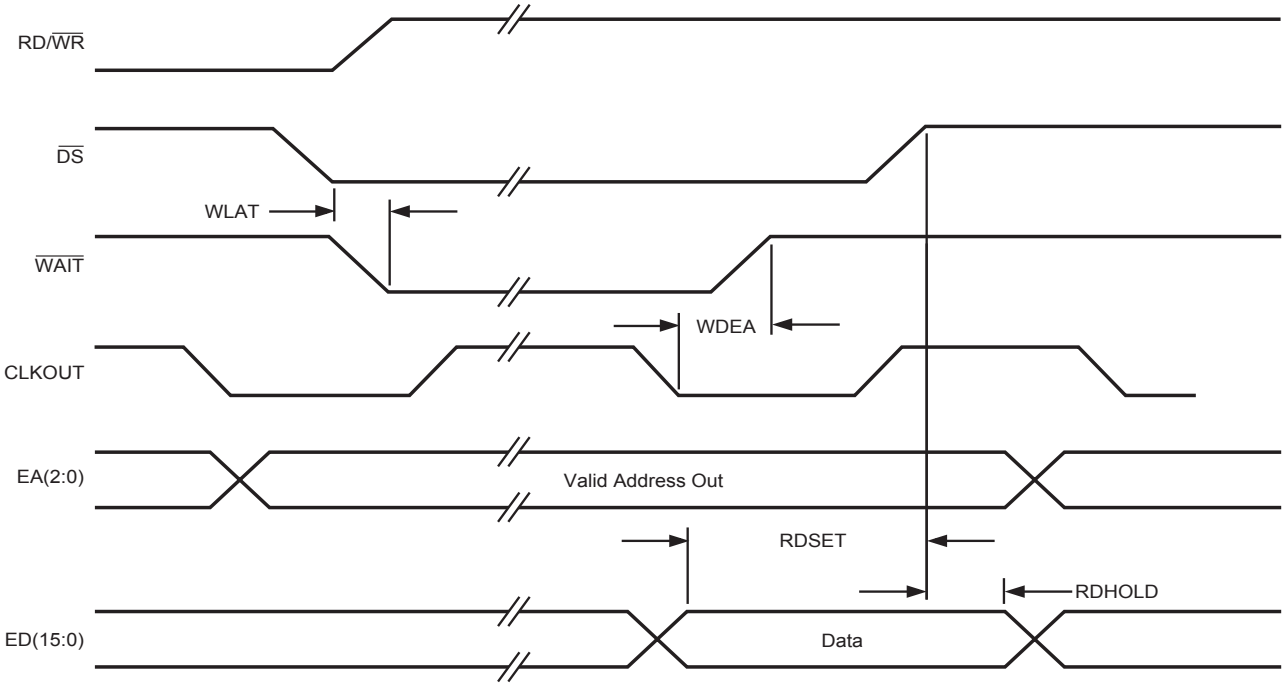

Figure 12. Read Timing Using $\overline{WAIT}$ Pin

TIMING DIAGRAMS (Continued)

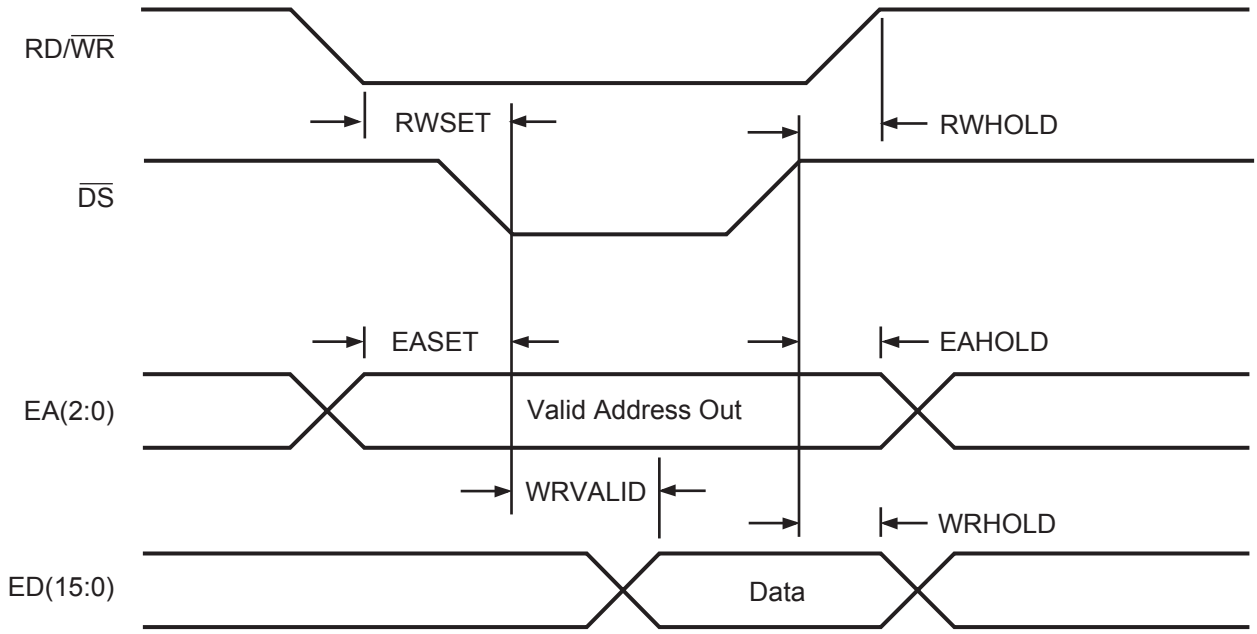

Figure 13. Write Timing

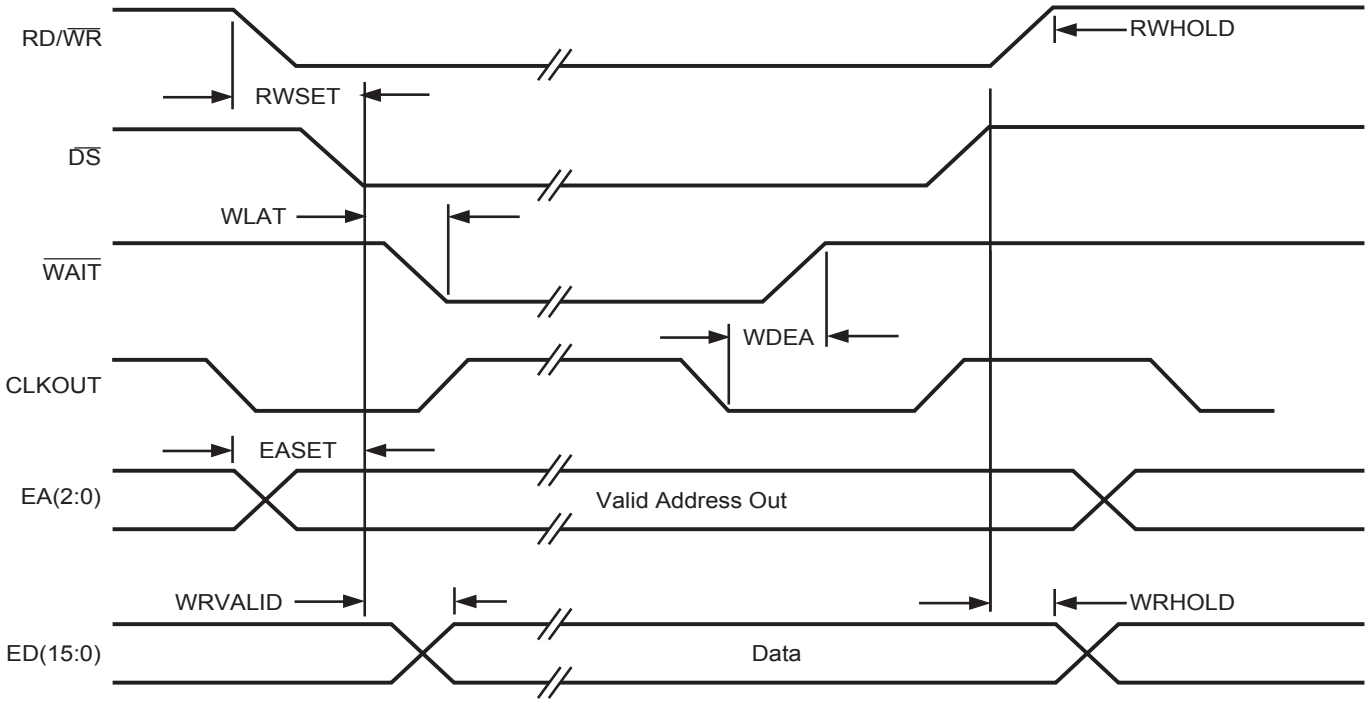

Figure 14. Write Timing Using WAIT Pin

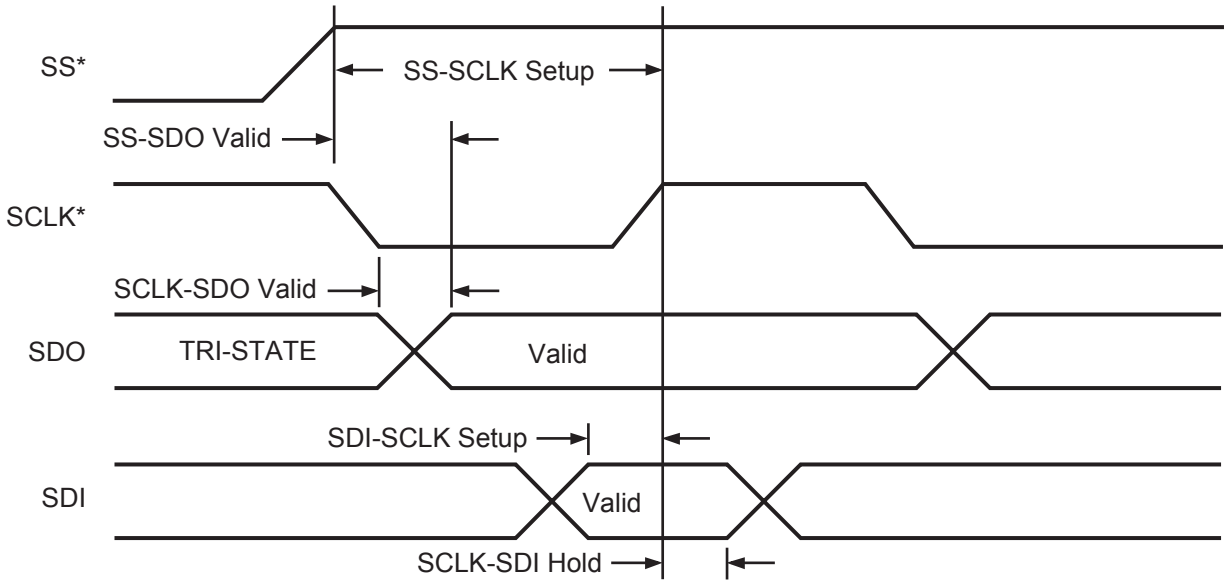

*Notes: The polarity of SCLK and SS are programmable by the user. SS is used in Slave Mode only. This figure illustrates data transmission on the falling edge of SCLK, data reception on the rising edge of SCLK, with SS active Low (default).

Figure 15. SPI Timing (Master and Slave Modes)

FUNCTIONAL DESCRIPTION

Instruction Timing. Most instructions are executed in one machine cycle. A multiplication or multiply/accumulate instruction requires a single cycle. Long immediate instructions, and Jump or Call instructions, are executed in two machine cycles. Specific instruction cycle times are described in the Instruction Description section.

Multiply/Accumulate. The multiplier can perform a 16-bit x 16-bit multiply, or multiply/accumulate, in one machine cycle using the Accumulator and/or both the X and Y inputs. The multiplier produces a 32-bit result, however, only the 24 most significant bits are saved for the next instruction or accumulation. For operations on very small numbers where the least significant bits are important, the data should first be scaled to avoid truncation errors.

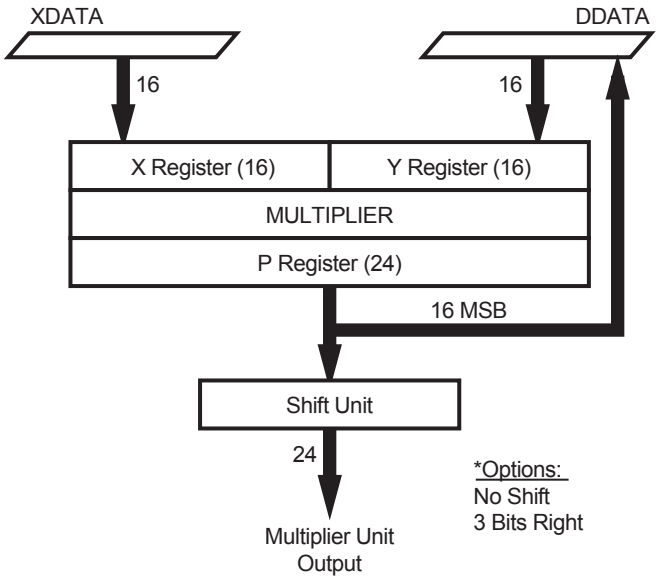

Figure 16. Multiplier Block Diagram

All inputs to the multiplier should be fractional two's-complement, 16-bit binary numbers, which places them in the range [–1 to 0.9999695]. The result is in 24 bits, so the range is [–1 to 0.9999999].

If 8000H is loaded into both the X and Y registers, the multiplication produces an incorrect result. Positive one cannot be represented in fractional notation, and the multiplier actually yields the result 8000H x 8000H = 8000H (–1 x –1 = –1). The user should avoid this case to prevent erroneous results.

A shifter between the P Register and the Multiplier Unit Output can shift the data by three bits right or no shift.

Data Bus Bank Switch. There is a switch that connects the X Bus to the DDATA Bus that allows both the X and Y registers to be loaded with the same operand for a one cycle squaring operation. The switch is also used to read the X register.

ALU. The ALU features two input ports. One is connected to the output of the 24-bit Accumulator. The other input selects either the Multiplier Unit Output or the 16-bit DDATA bus (left-justified with zeros in the eight LSBs). The ALU performs arithmetic, logic, and shift operations.

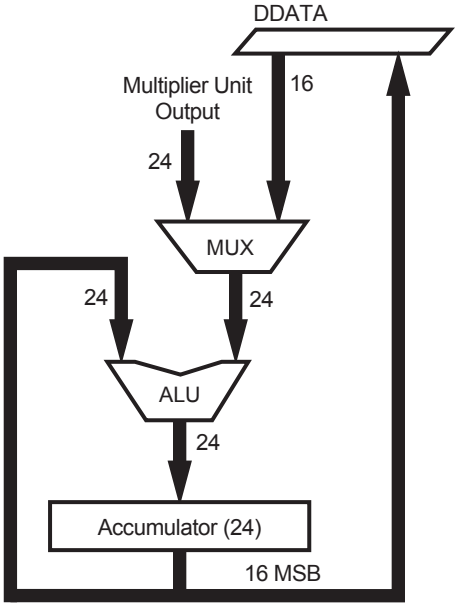

Figure 17. ALU Block Diagram

Hardware Stack. A six-level hardware stack is connected to the DDATA bus to hold subroutine return addresses or data. The CALL instruction pushes PC+2 onto the stack, and the RET instruction pops the contents of the stack to the PC.

User Inputs and Outputs. The Z893x3 features three User Inputs, UI0, UI1, and UI2. Pins UI0 and UI1 are connected directly to status register bits S10 and S11, and can be read, or used as a condition code in any conditional instruction. Pins UI0, UI1 and UI2 may also be used to clock the Counter/Timers. There are two user output bits, UO0 and UO1, which share pins with the timer outputs TMO0 and TMO1 on Port2. When the User Outputs are enabled, they are the complements of bits S5 and S6 of the Status Register.

Interrupts. The Z893x3 features three user interrupt inputs which can be programmed to be positive or negative edge-triggered. There are five interrupts generated by internal peripherals: the A/D converter, the Serial Peripheral Interface, and the three Counter/Timers. Internally there are three priority levels. The internal signals for Interrupt service Requests are denoted ISR0, ISR1, and ISR2, with ISR0 having the highest priority, and ISR2 the lowest. The user can program which interrupt sources are enabled, and which sources are serviced by the highest, middle, and lowest priority service routines. An interrupt is serviced at the end of an instruction execution. Two machine cycles are required to enter an interrupt instruction sequence. The PC is pushed onto the stack. The Interrupt Controller fetches the address of the interrupt service routine from the following locations in program memory:

Device	ISR0	ISR1	ISR2
Z89223/273/323/373	1FFFH	1FFEH	1FFDH

At the end of the interrupt service routine, a RET instruction is used to pop the stack into the PC.

The Set-Interrupt-Enable-Flag (SIEF) instruction enables the interrupts. Interrupts are automatically disabled when entering an interrupt service routine. Before exiting an interrupt service routine the SIEF instruction can be used to reenable interrupts.

Registers. In addition to the internal registers for processing, control, and configuration, the Z893x3 offers up to seven user-defined 16-bit external registers, EXT0–EXT6, depending on the Register Bank Select value. The external register address space is shared by the Z893x3 internal peripherals. Selecting banks 0–4 of the EXT Register Assignment allows access to/from three to seven of these addresses for general-purpose use.

I/O Ports. The Z893X3 DSP family features a user-configurable I/O structure. Most of the I/O pins include dual functions. The Counter/Timer, Serial Peripheral Interface, and External Interrupt Enables determine whether a pin is dedicated to peripheral or I/O port use.

Port0. A 16-bit user I/O port. Bits can be configured as input or output or globally as open-drain output. When enabled, Port0 consumes the 16 data lines used by the ED bus. Port0 function and ED bus use can be dynamically alternated by enabling and disabling Port0.

Port1. A multifunctional 8-bit port. Bits can be configured as input or output or globally as open-drain output. Port1 also supports INT2, CLKOUT, the Serial Peripheral Interface, and User Inputs 0 and 1.

Port2. A multifunctional 8-bit port. Bits can be configured as input or output or globally as open-drain output. Port2 also supports INT0 and INT1, all three Counter/Timer outputs, ED Bus, $\overline{\text{WAIT}}$, and UI2.

Port3. Port3 is an 8-bit user I/O port with 4 bits of input and 4 bits of output. It is available only on the 80-pin package.

External Register Usage. The external registers EXT0–EXT6 are accessed using the External Address Bus EA2–EA0, the External Data Bus (ED Bus) ED15–ED0, and control signals $\overline{\text{DS}}$, $\overline{\text{WAIT}}$, and RD/$\overline{\text{WR}}$. These provide a convenient data transfer capability with external peripherals. Data transfers can be performed in a single-cycle. An internal wait state generator is provided to accommodate slower external peripherals. A single wait state can be implemented through control register Bank15/EXT3. For additional wait states, the $\overline{\text{WAIT}}$ pin can be used. The $\overline{\text{WAIT}}$ pin is monitored only during execution of a read or write instruction to external peripherals on the ED bus.

Wait-State Generator. An internal Wait-State generator is provided to accommodate slow external peripherals. A single Wait-State can be implemented through a control register. For additional states, a dedicated pin ($\overline{\text{WAIT}}$) can be held Low. The $\overline{\text{WAIT}}$ pin is monitored only during execution of a read or write instruction to external peripherals (ED bus).

Analog to Digital Converter. The A/D Converter is a 4-channel, 8-bit half-flash converter. Two external reference voltages provide a scalable input range. The A/D sample rate is determined by a prescaler connected to the system clock. An interrupt is optionally generated at the end of a conversion. The four input channels can be programmed to operate on demand, continuously, or upon an event (timer or interrupt).

Counter/Timers (C/T0 and C/T1). These C/Ts are 16-bit with 8-bit prescalers. They also offer the option of being used as PWM generators and include both hardware and software Watch-Dog capabilities. Both C/Ts are identical and can be externally or internally clocked. Either C/T can drive TMO0 or TMO1. Either C/T can drive any of the three interrupt service requests (ISR0, ISR1, or ISR2).

Counter/Timer (C/T2). This C/T is 16-bits, externally or internally clocked, and can drive TMO2 and/or any of the three interrupt service requests (ISR0, ISR1, or ISR2).

Serial Peripheral Interface (SPI). The Serial Peripheral Interface provides a convenient means of inter-processor and processor-peripheral communication. It offers the capability to transmit and receive simultaneously. The SPI is designed to operate in either master or slave mode.

MEMORY MAP

Program Memory. Programs of up to 8K words can be masked into internal ROM (Z89323) or programmed into OTP (Z89373). Four locations are dedicated to the vector addresses for the three interrupt service routines (1FFDH–1FFFH) and for the starting address following a $\overline{\text{RESET}}$ (1FFCH). Internal ROM is mapped from 0000H to 1FFFH, and the highest location for program instructions is 1FFBH.

Internal Data RAM. All Z893x3 family members feature internal 512 x 16-bit data RAM organized as two banks of 256 x 16-bit words each (RAM0 and RAM1). The three addressing modes available to access the data RAM are direct addressing, short form direct, and register indirect.

The contents of both data RAM banks can be read simultaneously and loaded into the X and Y inputs of the multiplier during a multiply instruction.

The addresses for each data RAM bank are:

0–255 (0000H–00FFH) for RAM0

256–511 (0100H–01FFH) for RAM1

Data RAM Pointers. In register indirect, each data RAM bank is addressed by one of three data RAM address pointers:

Example: Pn:b, where
n = pointer number = 0, 1, or 2
b = bank = 0 or 1,

thus,

P0:0, P1:0, P2:0 for RAM0
P0:1, P1:1, P2:1 for RAM1

In auto-increment, loop-increment, and loop-decrement indirect addressing, the pointer is automatically modified.

The data RAM pointers, which may be read or written directly, are 8-bit registers connected to the lower byte of the internal 16-bit DDATA Bus.

Program Memory Pointers. The first 16 locations of each data RAM bank can be used as pointers to locations in Program Memory. These pointers provide an efficient way to address coefficients. The programmer selects a pointer location using two bits in the status register and two bits in the operand. At any one time, there are eight usable pointers, four per bank, and the four pointers are in consecutive locations.

Example: Dn:b, where
n = pointer number = 0, 1, 2, or 3
b = bank = 0 or 1,

thus,

D0:0, D1:0, D2:0, D3:0 for RAM0
D0:1, D1:1, D2:1, D3:1 for RAM1

If S3/S4 = 01 in the status register, then D0:0/D1:0/D2:0/D3:0 refer to register locations 4/5/6/7 in data RAM Bank 0.

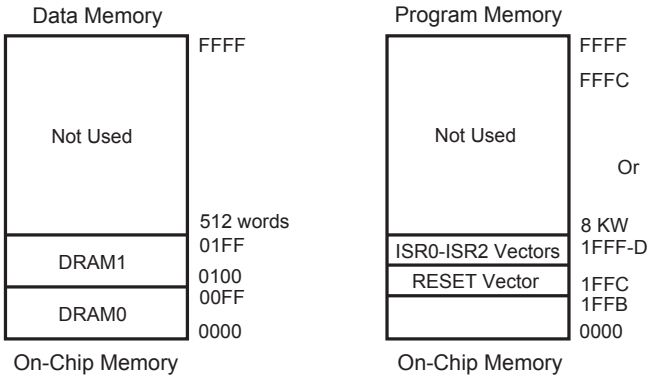

Figure 18. Memory Map

REGISTERS

Both external and internal registers are accessed in one machine cycle. The external registers are used to access the on-chip peripherals when they are enabled.

The internal registers of the Z893X3 are defined below:

Register	Register Definition
X	Multiplier X Input, 16-bits
Y	Multiplier Y Input, 16-bits
P	Multiplier Output, 24-bits
A	Accumulator, 24-bits
Pn:b	Six Data RAM Pointers, 8-bits each
PC	Program Counter, 16-bits
SR	Status Register, 16-bits
EXT0	depends on Bank Select #, 16-bits
EXT1	depends on Bank Select #, 16-bits
EXT2	depends on Bank Select #, 16-bits
EXT3	depends on Bank Select #, 16-bits
EXT4	depends on Bank Select #, 16-bits
EXT5	depends on Bank Select #, 16-bits
EXT6	depends on Bank Select #, 16-bits
EXT7	Interrupt Status/Bank Select, 16-bits

X and **Y** are two 16-bit input registers for the multiplier. These registers can be utilized as temporary registers when the multiplier is not being used.

P holds the result of multiplications and is read-only.

A is a 24-bit Accumulator. The output of the ALU is sent to this register. When 16-bit data is transferred into this register, it is placed into the 16 MSBs and the least significant eight bits are set to zero. Only the upper 16 bits are transferred to the destination register when the Accumulator is selected as a source register in transfer instructions.

Pn:b are the pointer registers for accessing data RAM where n = 0, 1, or 2, and b = 0 or 1. They can be directly read or written. They point to locations in data RAM.

PC is the Program Counter. Any instruction which may modify this register requires two clock cycles.

SR is the status register. It contains the ALU status and processor control bits. The status register can always be read in its entirety. S15–S10 are set/reset by hardware and can only be read by software. S9–S0 control hardware operations and can be written by software.

Table 11. Status Register Bit Functions

SR Bit	Function	Read/Write
S15 (N)	ALU Negative	RO
S14 (OV)	ALU Overflow	RO
S13 (Z)	ALU Zero	RO
S12 (C)	Carry	RO
S11 (UI1)	User Input 1	RO
S10 (UI0)	User Input 0	RO
S9 (SH3)	MPY Output Arithmetically Shifted Right by Three Bits	R/W
S8 (OP)	Overflow Protection	R/W
S7 (IE)	Interrupt Enable	R/W
S6 ($\overline{UO1}$)	User Output 1	R/W
S5 ($\overline{UO0}$)	User Output 0	R/W
S4–S3	"Short Form Direct" bits	R/W
S2–S0 (RPL)	RAM Pointer Loop Size	R/W

Note: RO = read only, RW = read/write. The status register can always be read in its entirety.

S15–S12 are set/reset by the ALU after an operation.

S11–S10 are set/reset by the user input pins.

If **S9** is set and a multiply/shift option is used, the shifter shifts the result three bits right. This feature allows the data to be scaled and prevents overflows.

If **S8** is set, the hardware clamps at maximum positive or negative values instead of overflowing.

S7 enables interrupts.

S6–S5 are User Outputs. The complement of the value in the Status Register appears on bits 2 and 3 of Port2 if the User Outputs are enabled by writing a 1 to Bit 15 of Bank 15–EXT3, and Counter/Timer 0 and 1 are disabled.

S4–S3 are the two MSBs in the "short form direct" mode of addressing.

S2–S0 define the RAM pointer loop size as indicated in Table 12.

REGISTERS (Continued)

Table 12. RPL Description

S2	S1	S0	Loop Size
0	0	0	256
0	0	1	2
0	1	0	4
0	1	1	8
1	0	0	16
1	0	1	32
1	1	0	64
1	1	1	128

The following are not actually registers, but are read or written in the same way as hardware registers on the chip:

Register	Register Definition
BUS	D-Bus
Dn:b	Eight Data Pointers
EXTn	External Register, 16-bit

BUS is a read-only register which, when accessed, returns the contents of the D-Bus. BUS is used for emulation only.

Dn:b refers to locations in RAM that can be used as a pointer to locations in program memory which is efficient for coefficient addressing. The programmer decides which location to choose from two bits in the status register and two bits in the operand. Thus, only the lower 16 possible locations in RAM can be specified. At any one time, there are eight usable pointers, four per bank, and the four pointers are in consecutive locations in RAM. For example, if S3/S4=01 in the status register, then D0:0/D1:0/D2:0/D3:0 refer to register locations 4/5/6/7 in RAM Bank 0. Note that when the data pointers are being written to, a number is actually being loaded to Data RAM, so they can be used as a limited method for writing to RAM.

EXTn are external registers (n = 0 to 6). These are seven 16-bit register addresses provided for mapping internal and external peripherals into the address space of the processor. Note that for external peripherals the actual register RAM does not exist on the chip, but would exist as part of the external device, such as an A/D result latch. The External Address Bus, EA2–EA0, the External Data Bus, ED15–ED0, $\overline{DS}$, $\overline{WAIT}$, and RD/$\overline{WR}$ are used to access external peripherals.

EXT7 is used for Register Bank Select, and to program wait states for EXT0–EXT6, and is not available for accessing an external peripheral.

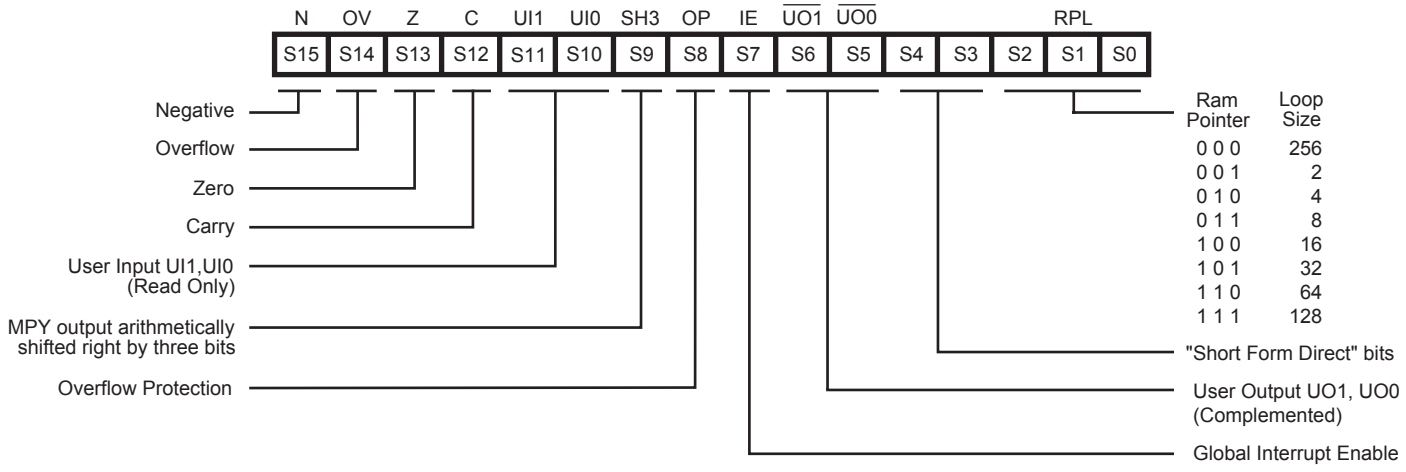

Figure 19. Status Register

BANK/EXT REGISTER ASSIGNMENTS

There are 16 different Banks of EXT registers. Control of the bank switching is done via the EXT7 register. The same EXT7 register exists in all Banks.

Banks 0–5 support different combinations of external registers for external peripherals, and external registers for internal (on-chip) peripherals. Use the bank that offers the optimum combination of internal and external registers to support the application. Use it as a preferred working bank to minimize bank switching.

Banks 6–12 only decode EXT6 and EXT7. Do not use EXT0–5 for Banks 6–12.

Banks 13–15 are control register banks. These banks are used in the initialization routines and whenever a configuration change is required. Refer to the sections on I/O Ports and Peripherals for details.

Table 13. EXT Register Assignments Banks 0–4

	Bank0	Bank1	Bank2	Bank3	Bank4
EXT0	User	User	User	User	User
EXT1	User	User	User	User	User
EXT2	User	User	User	User	User
EXT3	SPI Data	User	User	SPI Data	User
EXT4	Port0 Data	Port0 Data	User	User	User
EXT5	Port2–Port1 Data	Port2–Port1 Data	Port3 Data	User	User
EXT6	A/D_Ch0 Data	A/D_Ch1 Data	A/D_Ch2 Data	A/D_Ch3 Data	User
EXT7	Interrupt status/ Bank Select	Interrupt status/ Bank Select	Interrupt status/ Bank Select	Interrupt status/ Bank Select	Interrupt status/ Bank Select

Table 14. EXT Register Assignments Banks 5–15

	Bank5	Bank6–12	Bank13	Bank14	Bank15
EXT0	A/D_Ch1 Data	not defined	A/D Control	C/T2 Load/Read	Port0 Control
EXT1	A/D_Ch2 Data	not defined	C/T0 Control	C/T1 Control	Port1 Ctrl/Port0 Alloc
EXT2	A/D_Ch3 Data	not defined	C/T0 Load	C/T1 Load	Ports 2, 3, & C/T2 Control
EXT3	SPI Data	not defined	C/T0 Counter	C/T1 Counter	Wait State Control
EXT4	Port0 Data	not defined	C/T0 Prescaler Ld	C/T1 Prescaler Ld	SPI Control
EXT5	Port2–Port1 Data	not defined	C/T0 Prescaler	C/T1 Prescaler	System Clock Control
EXT6	A/D_Ch0 Data	A/D_Ch0 Data	A/D_Ch0 Data	Interrupt Polarity	Interrupt Allocation
EXT7	Interrupt status/ Bank Select	Interrupt status/ Bank Select	Interrupt status/ Bank Select	Interrupt status/ Bank Select	Interrupt status/ Bank Select

BANK/EXT REGISTER ASSIGNMENTS (Continued)

Interrupt Status/Bank Select Register—EXT7

Following is a description of EXT7. It contains both a Bank Select Field and Interrupt Status Bits.

Bank Select Field. The four LSBs of EXT7 denote which bank is selected as the current working bank.

Interrupt Status Bits. These bits can be read to identify which interrupts are pending. A "1" denotes interrupt pending, and a "0" denotes no interrupt. This ability to identify interrupts is particularly useful in polled interrupt operation or when servicing ISR2, which may come from several sources.

Note: Write "1" to a particular status bit to clear that bit. Before exiting an interrupt service routine, the relevant interrupt bit(s) should be cleared. To clear a bit efficiently:

- Load the value of EXT7 into a register or memory location
- Then load that value back into EXT7

Performing these steps clear all of the interrupts that were pending, but leave the Register Bank Select unchanged.

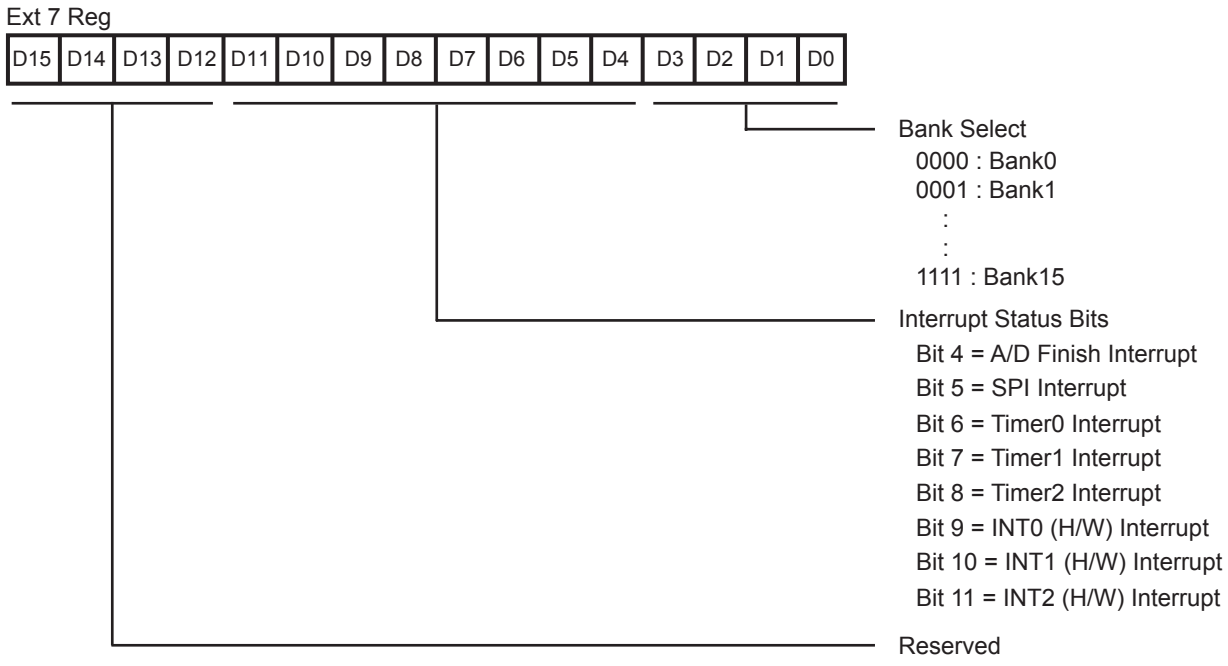

Figure 20. EXT7 Register

Interrupt Allocation Register—Bank15/EXT6

Bits 3–0 of the Interrupt Allocation Register define which unique interrupt source the highest priority, and is allocated to ISR0 (Interrupt Service Request 0).

Bits 7–4 of the Interrupt Allocation Register define which unique interrupt source has the second highest priority, and is allocated to ISR1 (Interrupt Service Request 1).

Bits 15–8 of the Interrupt Allocation Register are enable bits for common interrupt sources which have the lowest priority, and are all allocated to ISR2 (Interrupt Service Request 2). All the enabled interrupts which are not allocated to ISR0 or ISR1, are allocated to ISR2. When an ISR2 interrupt occurs, the interrupt service routine must read the Interrupt Status Register in EXT7 to determine the source. The Interrupt Status Register can be used for polling interrupts. An Interrupt that is not selected as a source to ISR0, ISR1, or ISR2, is disabled.

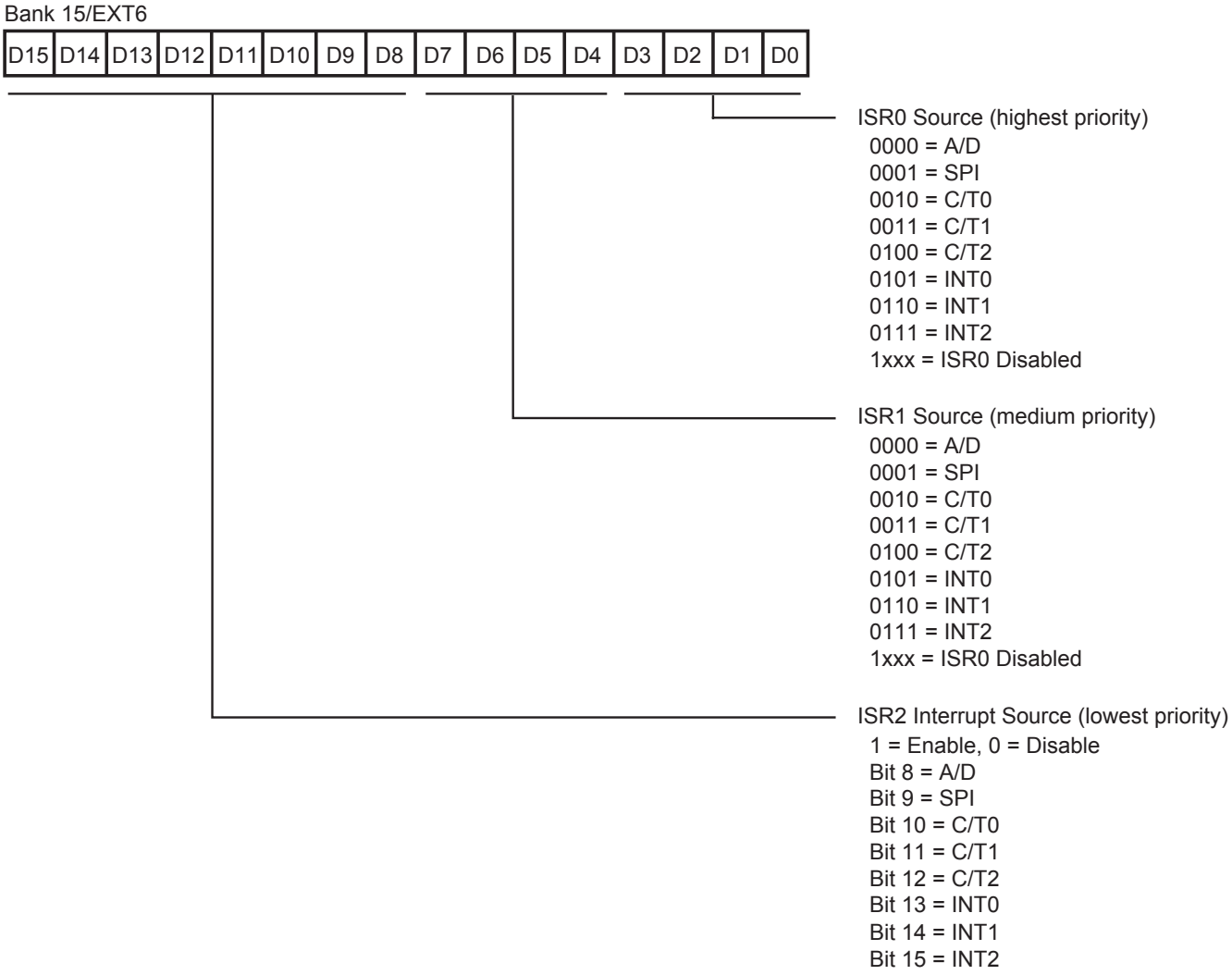

Figure 21. Interrupt Allocation Register

BANK/EXT REGISTER ASSIGNMENTS (Continued)

Interrupt Polarity Register—Bank14/EXT6

The trigger polarities, rising-edge or falling-edge, of all the external interrupts are programmable.

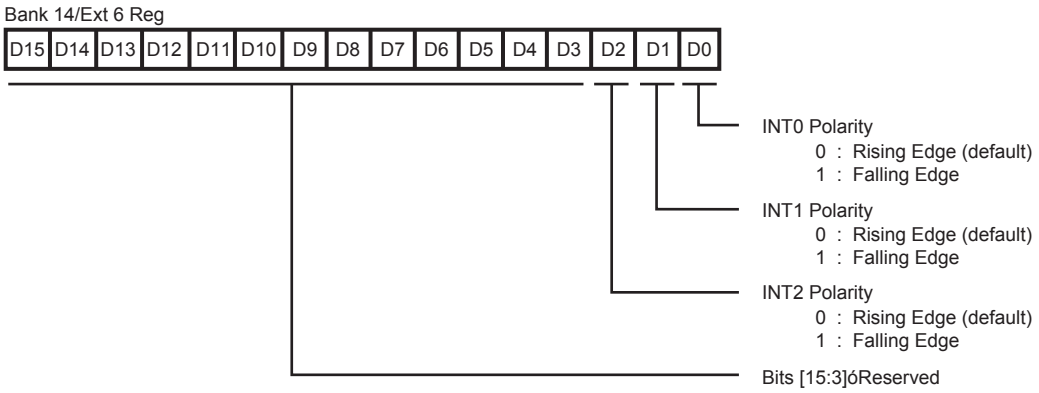

Figure 22. Interrupt Polarity Register

Wait-State Control Register—Bank15/EXT3

The Wait-State Control Register enables the insertion of wait states when the DSP accesses slow peripherals. This register enables the insertion of one wait state on the ED bus, providing 100 ns of access time instead of 50 ns when operating at 20 MHz. When more than one wait state is necessary, input pin P2.4/ $\overline{\text{WAIT}}$ can be used to provide additional wait states. The Wait-State Register enables the user to specify which EXT registers, EXT0–EXT6, and which operation, read and/or write, require a wait state. EXT7 is an internal register, and requires no wait state.

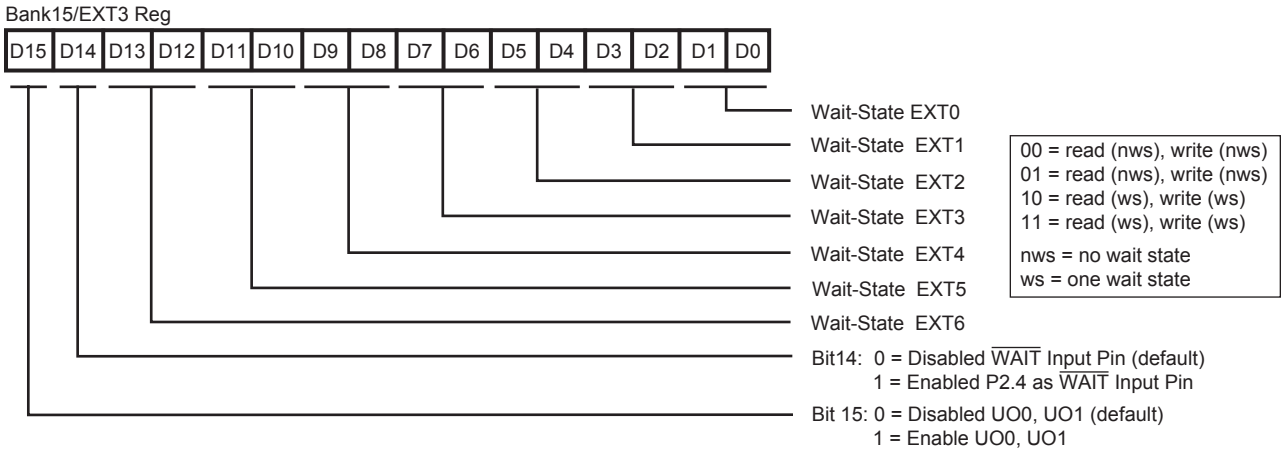

Figure 23. Wait-State Control Register

I/O PORTS

I/O pin allocation of ports for the different package types is designed to provide configuration flexibility. Each port line of Ports 0, 1, and 2 can be independently selected as an input or an output. Each port's output lines can be globally selected as push-pull or as open-drain outputs

Table 15. I/O Port Bit Allocations

Device Pins	44-Pin PLCC, 44-Pin PQFP	64-Pin TQFP, 68-Pin PLCC	80-Pin PQFP
P0 MSB	ED15–ED8, or P0.15–P0.8, or P1.7–P1.0	ED15–ED8, or P0.15–P0.8	ED15–ED8, or P0.15–P0.8
P0 LSB	ED7–ED0, or P0.7–P0.0	ED7–ED0, or P0.7–P0.0	ED7–ED0, or P0.7–P0.0
P1		P1.7–P1.0	P1.7–P1.0
P2	P2.4–P2.0	P2.7–P2.0	P2.7–P2.0
P3			P3.7–P3.0

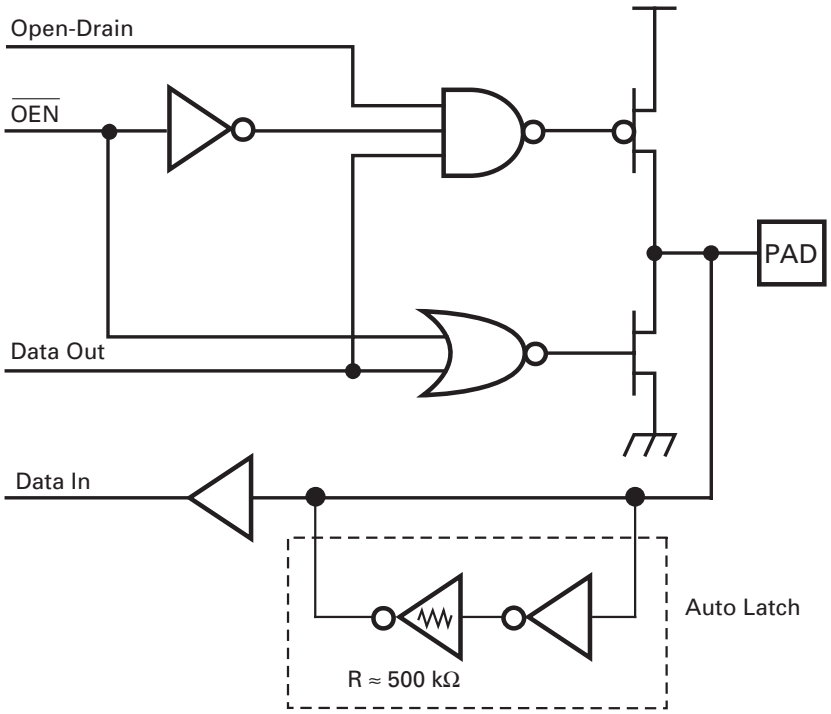

Figure 24. Port 0, 1 and 2 Configuration

I/O PORTS (Continued)

Port0—16-Bit Programmable I/O

Bank15/EXT0 is the Port0 direction control register. Bank15/EXT1 includes specific bits to enable and configure Port0. The Port0 data register is Ext4 in Banks 0, 1, or 5.

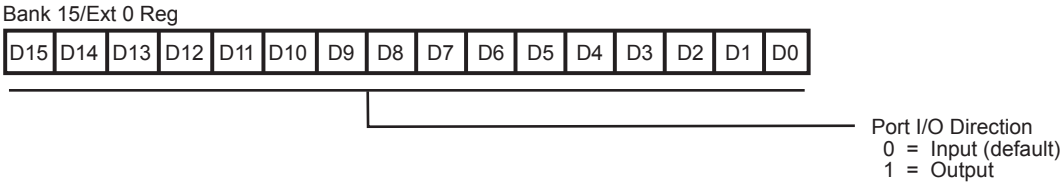

Figure 25. Port 0 Control Register

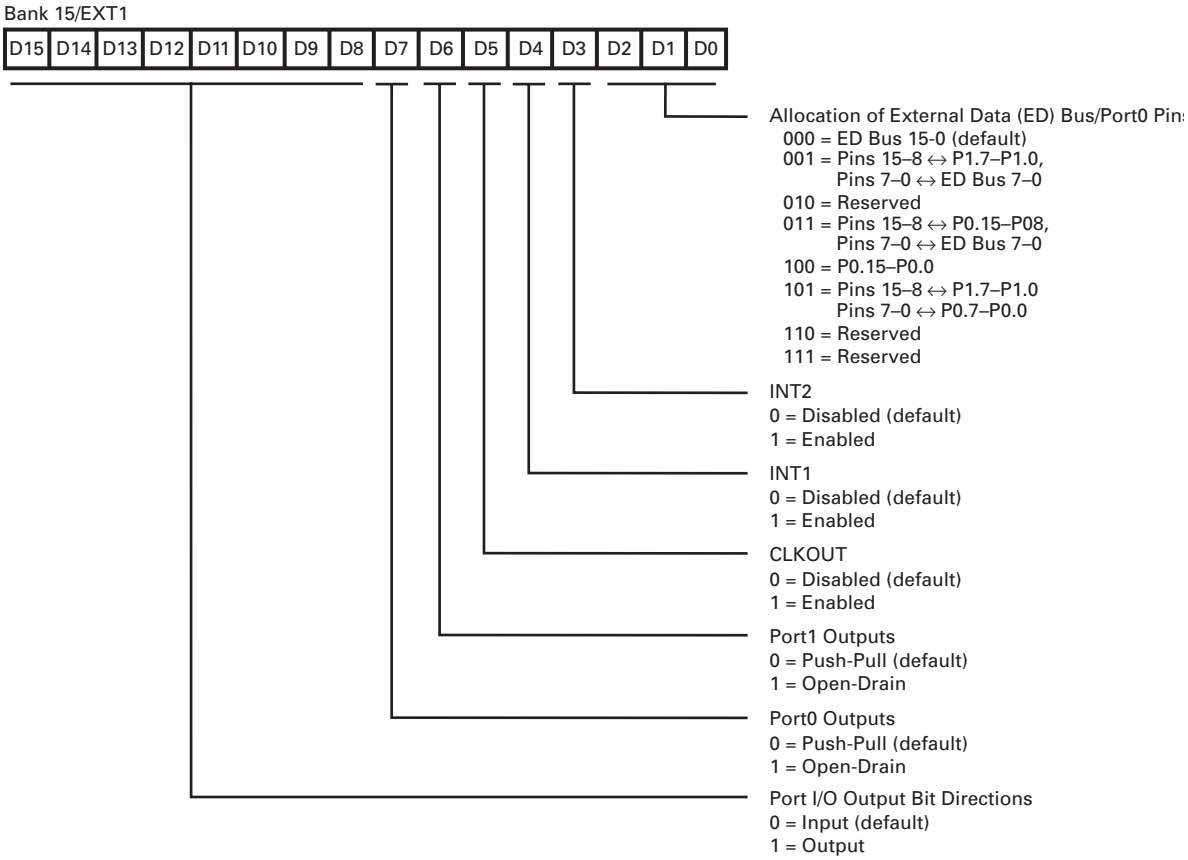

Figure 26. Bank15/EXT1 Register

Port1—8-Bit Programmable I/O

Bank15/EXT1 is the Port1 control register. The MSB is the Port1 direction control. Port1 data is accessed as the LSB of EXT5 in Banks 0, 1, or 5. The Port1 pins can also be mapped to internal functions. When INT2, CLKOUT, UI0 and UI1, or the SPI are enabled, they use Port1 pins. The 44-pin packages do not feature Port1 pins, however, Port1 and its internal functions can be mapped to the MSB of the ED Bus/Port0 pins. See bits 2–0 of Bank15/EXT1.

Table 16. Port1 Bit Function Allocation

Port Pin	IF	Condition	Then	Else
P1.0/INT2	Bank15/EXT1 Bit 3 = 1	Enable INT2	INT2	P1.0
P1.1/CLKOUT	Bank15/EXT1 Bit 5 = 1	Enable CLKOUT	CLKOUT	P1.1
P1.2/SDI	Bank15/EXT4 Bit 0 = 1	Enable SPI	SDI	P1.2
P1.3/SDO	Bank15/EXT4 Bit 0 = 1	Enable SPI	SDO	P1.3
P1.4/SS	Bank15/EXT4 Bit 0 = 1	Enable SPI	SS	P1.4
P1.5/SCLK	Bank15/EXT4 Bit 0 = 1	Enable SPI	SCLK	P1.5
P1.6/UI0	Bank13/EXT1 Bits [2,1] = 10, or Bank14/EXT1 Bits [2,1] = 10	Enable UI0	UI0	P1.6
P1.7/UI1	Bank13/EXT1 Bits [2,1] = 11, or Bank14/EXT1 Bits [2,1] = 11	Enable UI1	UI1	P1.7

I/O PORTS (Continued)

Port2—8-Bit Programmable I/O

Bank15/EXT2 is the Port2 control register. The LSB is the Port2 direction control. Port2 data is accessed as the MSB of EXT5 in Banks 0,1,or 5. The Port2 pins can also be mapped to internal functions. When INT0, INT1, TMO0, TMO1, $\overline{\text{WAIT}}$, UI2, or TMO2 are enabled, they use Port2 pins. The 44-pin packages do not feature Port2 pins P2.7–P2.5.

Table 17. Port2 Bit Function Allocation

Port Pin	IF	Condition	Then	Else
P2.0/INT0	Bank15/EXT2 Bit 9 = 1	Enable INT0	INT0	P2.0
P2.1/INT1	Bank15/EXT1 Bit 4 = 1	Enable INT1	INT1	P2.1
P2.2/TMO0	Bank13/EXT1 Bit [6,5] = 10, or Bank14/EXT1 Bit [6,5] = 10	Enable TMO0	TMO0	P2.2
P2.3/TMO1	Bank13/EXT1 Bit [6,5] = 11, or Bank14/EXT1 Bit [6,5] = 11	Enable TMO1	TMO1	P2.3
P2.4/$\overline{\text{WAIT}}$	Bank15/EXT3 Bit 14 = 1	Enable $\overline{\text{WAIT}}$	$\overline{\text{WAIT}}$	P2.4
P2.5/UI2	Bank15/EXT2 Bit 13 = 1	C/T2 clock is UI2	UI2	P2.5
P2.6/TMO2	Bank15/EXT2 Bits 14 = 1	Enable TMO2	TMO2	P2.6
P2.7			P2.7	P2.7

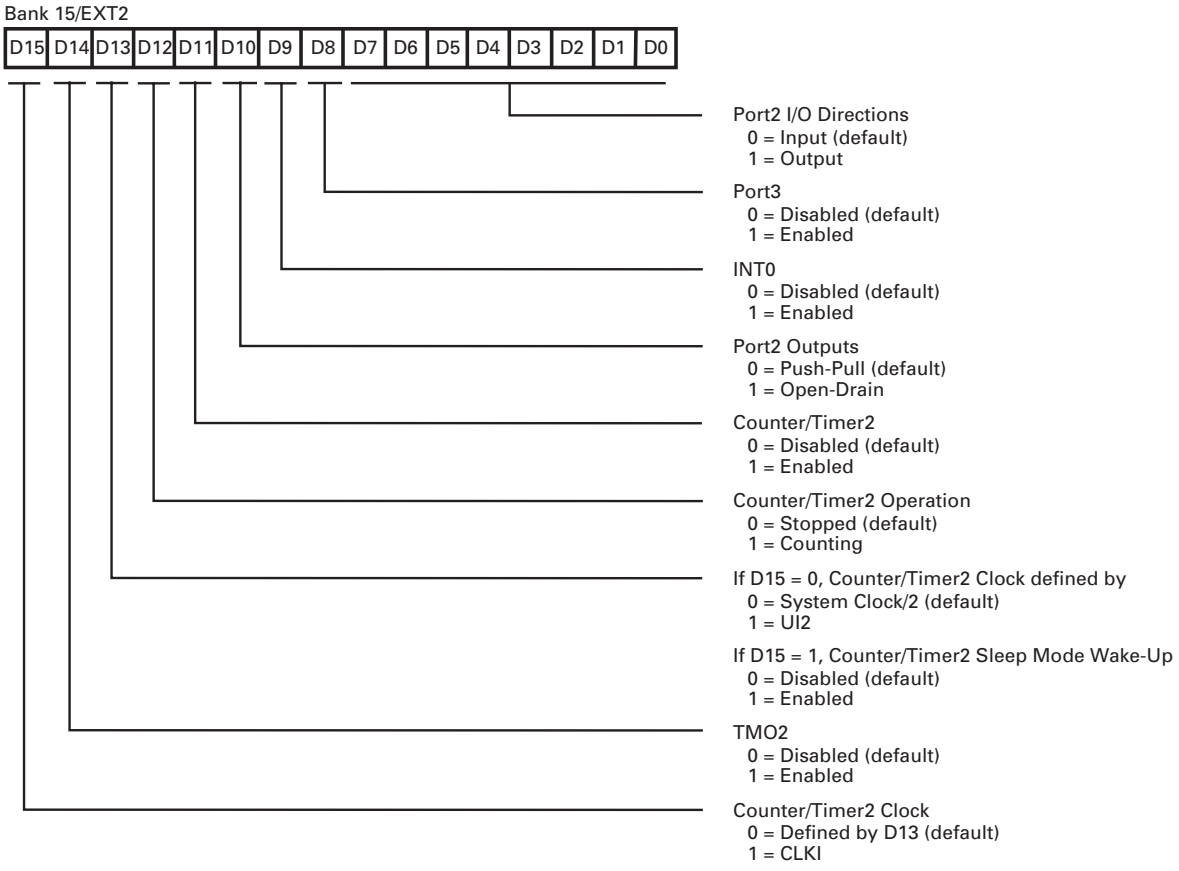

Figure 27. Bank15/EXT2 Register

Port3—8-Bit Programmable I/O

Port3 is an additional I/O port available only in the 80-pin package. P3.3–P3.0 are inputs and P3.7–P3.4 are outputs. Bit 8 of Bank15/EXT2 enables and disables Port3. The LSB of Bank2/EXT5 is the Port3 Data Register.

PERIPHERALS

Analog to Digital Converter (A/D)

The A/D is a 4-channel 8-bit half-flash converter. It uses two reference resistor ladders, one for the upper 5 bits, and another for the lower 3 bits. Two external reference voltage input pins, VAHI and VALO, set the input voltage measurement conversion range. The converter is auto-zeroed prior to each sampling period. Bank13/EXT0 is the A/D control register.

The conversion time depends on the system clock frequency and the selection of the A/D prescaler value, bits DIV2–DIV0. The clock prescaler can be programmed to derive a 2 µs conversion time. For example, when deriving the A/D clock from a 20-MHz system clock, the A/D prescaler value should be set to divide by 40.

Bits ADST1–ADST0 determine one of the following start conversion options:

- Writing to the ADCTL control register
- ISR1
- C/T2 time-out
- C/T0 time-out

The start conversion operation may begin at any time. If a conversion is in progress, and a new start conversion signal is received, the conversion in progress will abort, and a new conversion will initiate.

Bits QUAD and SCAN determine one of the following Modes of operation:

- One channel is converted four times, with the results sequentially written to result registers 0, 1, 2 and 3.
- One channel is converted one time, with the respective result register updated.
- Four channels are converted one time each, with the respective four result registers updated.
- Four channels are converted repeatedly, with the respective four result registers constantly updated.

When one of the two four-channel modes is selected, the channel specified by CSEL1–CSEL0 will convert first. The other three channels will convert in sequence. In the sequence, AN0 follows AN3.

Bit ADIE enables the A/D to generate interrupts at the end of a conversion. Bit ADIT determines whether an interrupt occurs after the first or fourth conversion.

To reduce power consumption the A/D can be disabled by clearing the ADE bit.

Though the A/D will function with smaller input signals and reference voltages, the noise and offsets remain constant. The relative error of the converter will increase and the conversion time will also take longer.

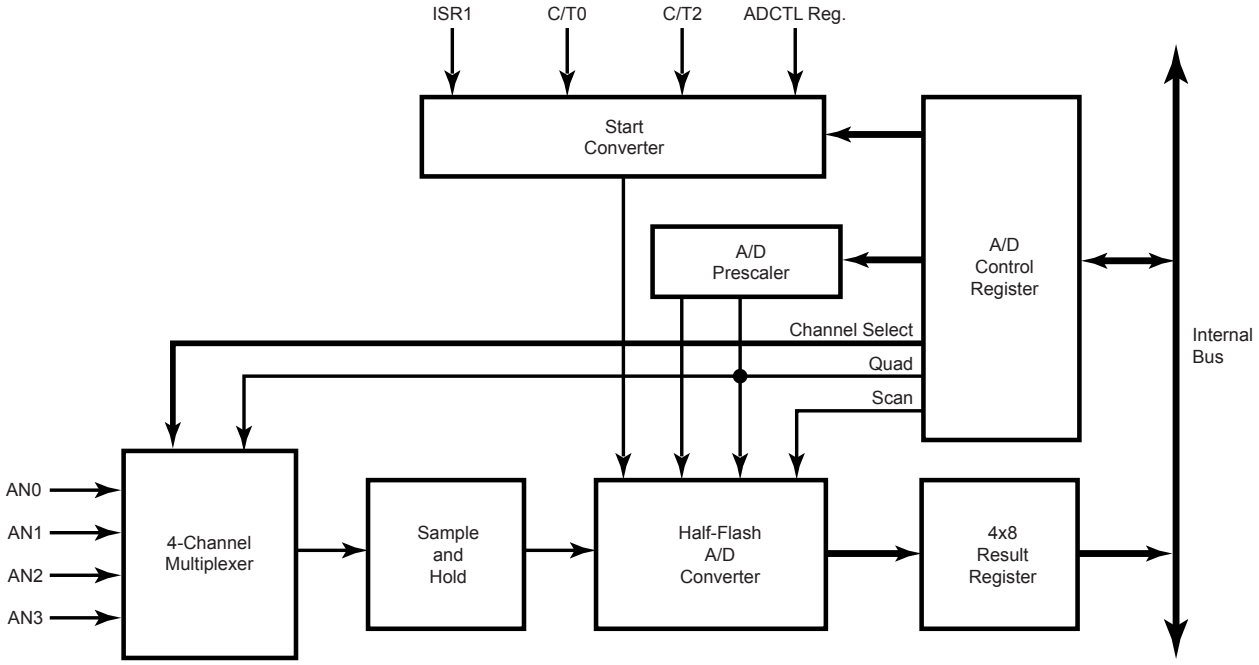

Figure 28. ADC Architecture

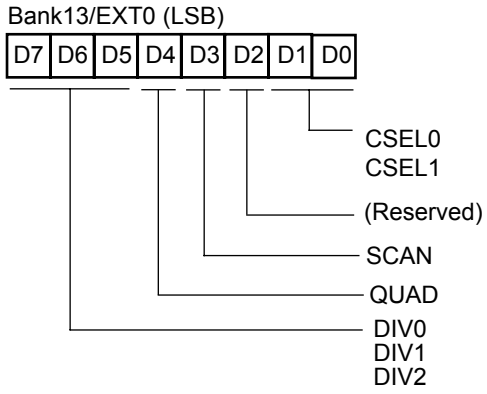

Figure 29. ADCTL Register (LSB)

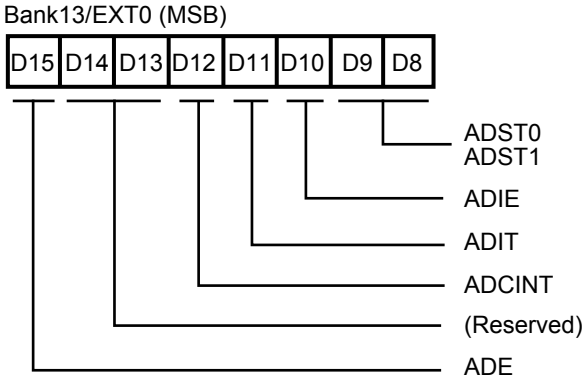

Figure 30. ADCTL Register (MSB)

Table 18. A/D Prescaler Values (Bits 7, 6, 5)

DIV2	DIV1	DIV0	A/D Prescaler (Crystal divided by)
0	0	0	8
0	0	1	16
0	1	0	24
0	1	1	32
1	0	0	40
1	0	1	48
1	1	0	56
1	1	1	64

Table 19. Operating Modes (Bits 4, 3)

QUAD	SCAN	Option
0	0	Convert selected channel 4 times, then stop
0	1	Convert selected channel, then stop.
1	0	Convert 4 channels, then stop.
1	1	Convert 4 channels continuously.

Table 20. Channel Select (Bits 1, 0)

CSEL1	CSEL0	Channel
0	0	AN0
0	1	AN1
1	0	AN2
1	1	AN3

ADE (Bit 15). A “0” disables any A/D conversions or accessing any A/D registers, except writing to the ADE bit. A “1” enables all A/D accesses.

Reserved (Bits 14, 13). Reserved for future use.

ADCINT (Bit 12). The A/D interrupt bit is read-only. The ADCINT will reset every time this register is written.

ADIT (Bit 11). Selects when to set the A/D interrupt if interrupts are enabled (ADIE=1). A value of “0” sets the interrupt after the first A/D conversion is complete. A value of “1” sets the interrupt after the fourth A/D conversion is complete.

ADIE (Bit 10). A/D Interrupt Enable. A value of “0” disables the A/D Interrupt. A value of “1” enables the A/D Interrupt.

Table 21. START (Bits 9, 8)

ADST1	ADST0	Option
0	0	Conversion starts when this register is written.
0	1	Conversion starts on INT1 per Interrupt Allocation Register
1	0	Conversion starts on C/T2 time-out.
1	1	Conversion starts on C/T0 time-out.

There are four A/D result registers. See the EXT Register Assignments for their location in the different banks.

PERIPHERALS (Continued)

Counter/Timers (C/T0 and C/T1)

The Z893x3 features two 16-bit Counter/Timers (C/T) that can be independently configured to operate in various modes. Each is implemented as a 16-bit Load Register and a 16-bit down counter. Either C/T input can be selected from UI0 or UI1. Either C/T output can be directed to TMO0 or TMO1. The C/T clock is a scaled version of the system clock. Each C/T features an 8-bit prescaler. The clock rates of the two C/T are independent of each other. The C/Ts can be programmed to recognize clock events on the rising edge, the falling edge, or both rising and falling edges of the input signal. Outputs on TMO0 or TMO1 can be programmed to occur with either polarity.

If either C/T is enabled and an output pin TMO0 or TMO1 is selected, and at the same time User Outputs are enabled, the C/T takes precedence, and Status Register bits 5 or 6 do not affect the state of the selected pin.

C/T Modes of Operation:

MODE 0—Square Wave Output. The C/T is configured to generate a continuous square wave of 50% duty cycle. Writing a new value to the TMLR Register takes effect at the end of the current cycle, unless TMR is written.

MODE 1—Retriggerable One-Shot. The C/T is configured to generate a single pulse of programmable duration. The pulse may be either logic High or logic Low. Retriggering the one-shot before the end of the pulse causes it to retrigger for a new duration.

MODE 2—8-Bit PWM. The C/T is configured to generate a pulse-width modulated waveform. The duty cycle ranges from 0–100% (0/256 to 255/256; 8-bits) of a cycle in steps of 1/256 of a cycle. The asserted state of the waveform may be either logic High or logic Low. Writing a new pulse-width value to the TMLR Register takes effect at the end of current cycle, unless TMR is written.

MODE 3—16-Bit PWM. The C/T is configured to generate a pulse-width modulated waveform. The duty cycle ranges from 0–100% (0/65,536 to 65,535/65,536; 16-bits) of a cycle in steps of 1/65,536 of a cycle. The asserted state of the waveform may be either logic High or logic Low. Writing a new pulse-width value to the TMLR Register takes effect at the end of current cycle, unless TMR is written.

MODE 4—Finite Pulse String Generator. The C/T is configured to generate 1 to 65,535 pulses. The output pulses are actually from the Timer Clock Prescaler divided by 2 (TMCLK). They are gated to the output until the Timer Down-Counter underflows.

MODE 5—Externally Clocked One-Shot. The C/T is configured to generate an output pulse. The pulse may be either logic High or logic Low. It is deasserted when a programmable number of input events (up to 65,535) occur on the input pin, UI0 or UI1.

MODE 6—Software Watch-Dog Timer. The C/T is configured to generate a Hardware Reset on time-out, unless retriggered by software.

MODE 7—Hardware Watch-Dog Timer. The C/T is configured to generate a Hardware Reset on time-out unless retriggered by an event on the input pin, UI0 or UI1.

MODE 8—Pulse Stopwatch. The C/T is configured to measure the time during which its input is asserted.

MODE 9—Edge-to-Edge Stopwatch. The C/T is configured to measure the period from one rising (falling) edge to the next rising (falling) edge on the input.

MODE 10—Edge Counter. The C/T is configured to count a number of input edges (up to 65,535). Input edges may be selected as rising or falling or both.

MODE 11—Gated Edge Counter. The C/T is configured to count the number of input edges (up to 65,535) in a time window set by the second timer. Edges are counted until the second timer underflows. Input edges may be selected as rising, falling, or both.

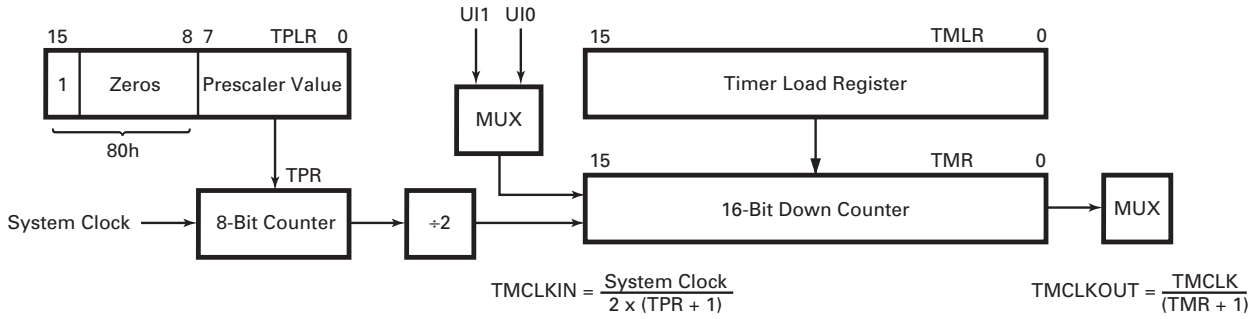

Figure 31. Counter/Timer 0 and 1 Block Diagram

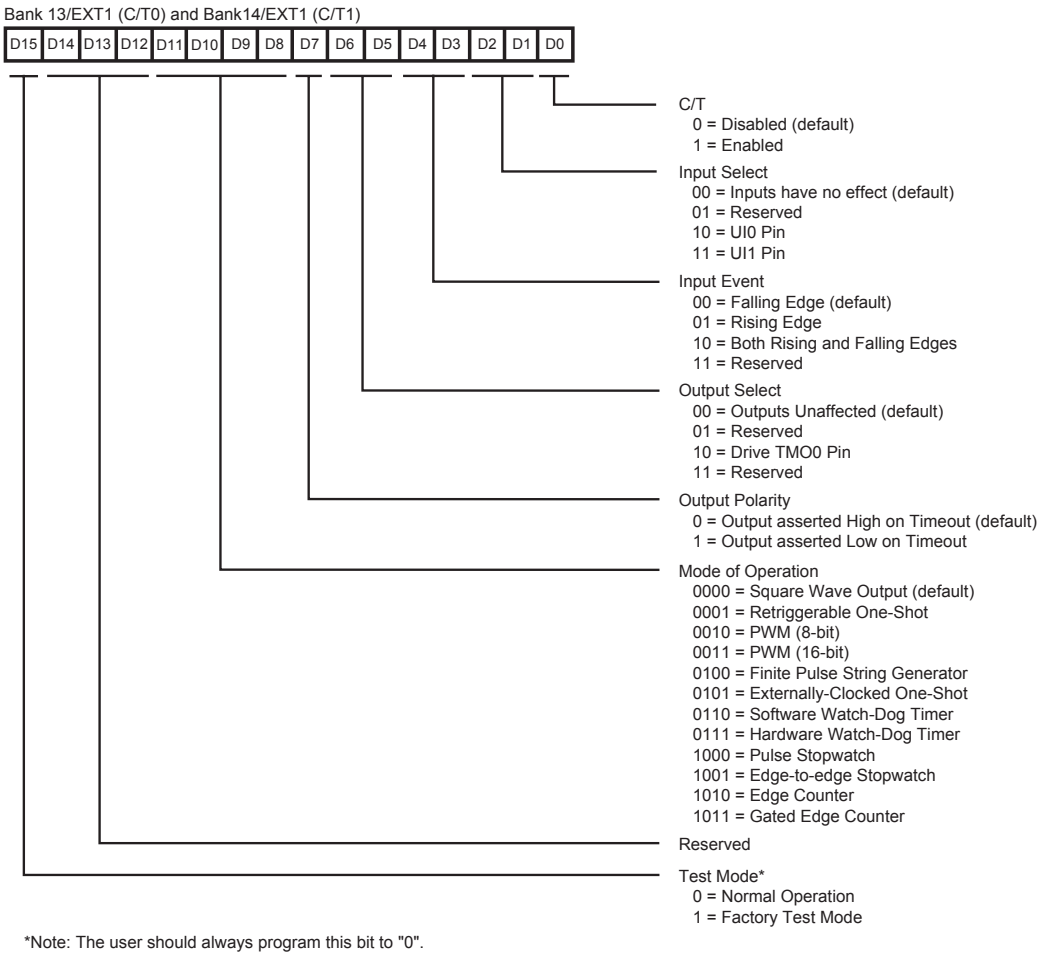

Figure 32. C/T0 and C/T1 Control Register

C/T Registers

Each C/T contains a set of five 16-bit Registers. Bank13 is used to access the registers for C/T0 and Bank14 is for the C/T1 registers. All accesses to C/T Registers occur with zero wait states.

Counter/Timer Control Register (Bank13,14/EXT1). The C/T Control register enables/disables the C/T, selects input and output options, and the mode of operation.

TMLR—Load Register (Bank13,14/EXT2). The 16-bit TMLR register holds the value that is loaded into TMR when TMR underflows.

TMR—Counter Register (Bank13,14/EXT3). TMR is a 16-bit down counter that holds the current C/T value. It can be read like any other ordinary register. However, writing to TMR is different than writing to an ordinary register. A write to TMR causes the contents of TMLR to be written into TMR, causing the C/T to be retriggered.

TPLR—Prescaler Load Register (Bank13,14/EXT4). The 16-bit TPLR register holds the prescaler load value in its lower 8 bits. Bit 15 must be written with a “1”, and bits 14–8 must be written with “0’s”.

Note: If the C/T interrupt is being used, this register must be re-written at the end of the interrupt service routine in order to enable the next interrupt. The number of clock cycles from the beginning of the interrupt service routine to the write must exceed the prescaler load value.

PERIPHERALS (Continued)

TPR—Prescaler Register (Bank13,14/EXT5). TPR is an 8-bit down counter that holds the current Prescaler Count Value. It can be read like any other ordinary register. However, writing to TPR is different than writing to an ordinary register. A write to TPR causes the lower 8-bit contents of TPLR to be written into TPR, causing the Prescaler to be retriggered.

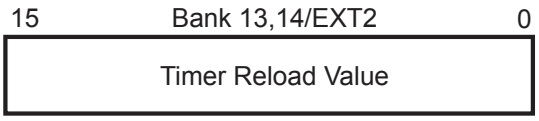

Figure 33. TMLR—Load Register

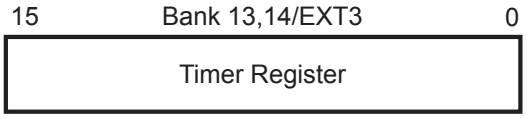

Figure 34. TMR—Counter Register

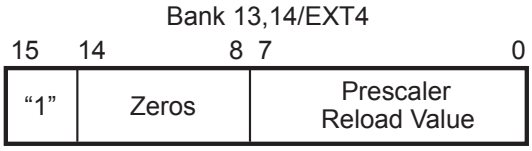

Figure 35. TPLR—Prescaler Load Register

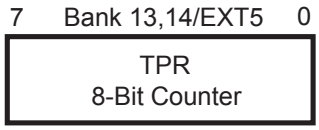

Figure 36. TPR—Prescaler Register

Prescaler Operation

The Prescaler section comprises TPLR and TPR, followed by a divide-by-two flip-flop. This operation generates a 50 percent duty cycle output, TMCLKIN. TPR's input clock is the system clock. The maximum prescaler output frequency is 1/2 the system clock frequency.

After TPR is loaded, it decrements at the system clock frequency and generates an output to the divide-by-two flip-flop. When the count reaches 0, the TPR counter is reloaded from the lower 8 bits of TPLR Register.

Two other events cause a reloading of the TPR counter:

1. Writing to TPR
2. Reloading TMR, which happens when TMR underflows, or when TMR is written.

Note: For C/T Modes 8–11, the external input signal on UI0 or UI1 is synchronized with TMCLKIN before being applied to TMR. The external input signal frequency must be no higher than 1/2 of the TMCLKIN frequency.

GENERAL-PURPOSE COUNTER/TIMER (C/T2)

This versatile16-bit C/T offers multiple uses, including Sleep Mode Wake-up. It can be clocked with the slow 32 kHz crystal clock (CLKI), while the DSP and other peripheral functions operate at a higher frequency generated by the PLL. Also included is an independent long duration timer.

GPT is a 16-bit down counter that holds the current C/T value. It can be read like any other ordinary register. GPTL and GPT share the same address, Bank14/EXT0. A write to GPTL reloads GPT, causing the C/T to be retriggered. When C/T2 underflows, it is reloaded with the most recent value written to GPTL. If the C/T2 interrupt is enabled, at underflow an interrupt is generated. The counting operation of the counter can be disabled. The C/T clock source can be selected to be CLKI, UI2, or the system clock divided by 2. When the C/T2 output is enabled, it drives the TMO2 pin.

Bank 15/EXT2 is the control register for C/T2, and for I/O Ports 2 and 3. Refer to the I/O Ports section, page 33, for a description of the I/O port bit allocation.

Table 22. C/T2 Bits D15 and D13

D15	D13	C/T2 Clock	Sleep/Wake-Up Mode
0	0	SYSCLK ÷ 2 (default)	n/a
0	1	UI2	n/a
1	0	CLKI	Disabled
1	1	CLKI	Enabled

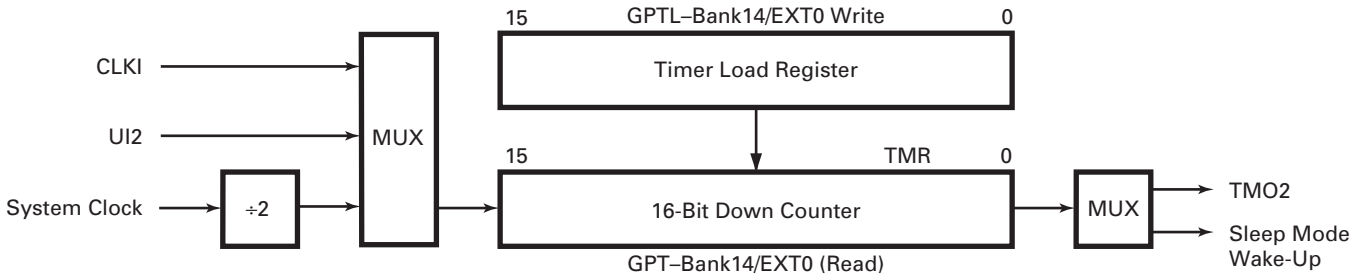

Figure 37. Counter/Timer2 Block Diagram

GENERAL-PURPOSE COUNTER/TIMER (C/T2) (Continued)

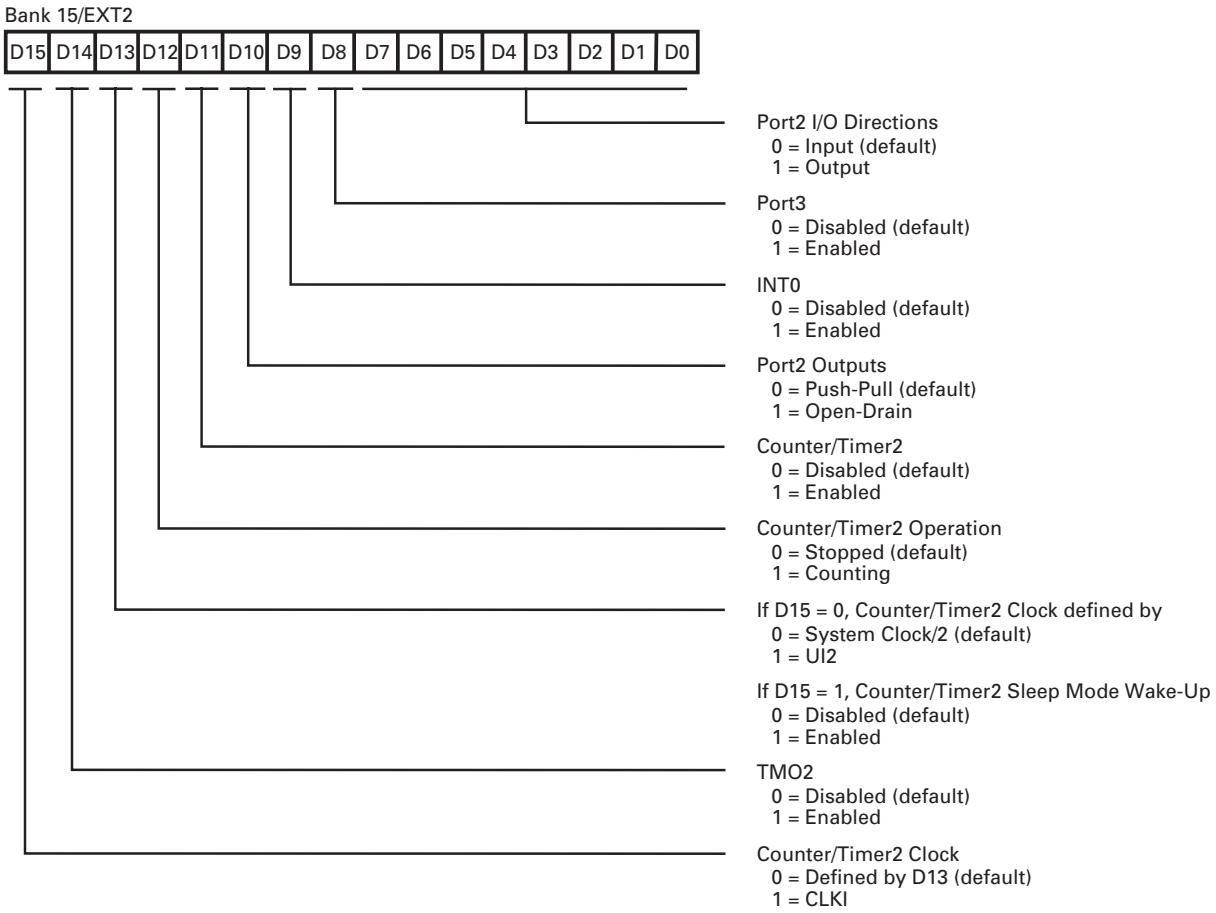

Figure 38. Counter/Timer2 Control Register

SERIAL PERIPHERAL INTERFACE

The Z893x3 incorporates a Serial Peripheral Interface (SPI) for communication with other microcontrollers and peripherals. The SPI can be operated either as the system Master, or as a system Slave. The SPI consists of three registers: the SPI Control Register (Bank15/EXT4), the SPI Receive/Buffer Register (RxBUF), and the SPI Shift Register.

SPI Data Access

Receive operations are double buffered. Bank0/EXT3 accesses both RxBUF for read (receive) operations, and the SPI shift register for write (transmit) operations.

Bank 0/EXT 3 Register

D15	D14							D7	D6	D5	D4	D3	D2	D1	D0

Bits 7–0 SPI Data (SPI Shift Register for transmit and RxBUF for receive)
Bit 14 Receive Character Available
Bit 15 Receive Character Overrun

Figure 39. SPI Data Access

SPI Control Register

This register is the Low byte of Bank15/EXT4. It is a read/write register that controls Master/Slave selection, SS polarity, clock source and phase selection, and indicates byte available and data overrun conditions. The control register is multifunction depending on Master/Slave mode selection.

In Master mode, Bit 6 defines the SPI clock source. A “1” selects SCLK = C/T0 output, and a “0” selects SCLK = System Clock divided down by 2, 4, 8, or 16, as determined by bits 1 and 2.

In Slave Mode, bit 1 is the Receive Byte Overrun flag. This flag can be cleared by writing a “0” to this bit. Bit 2 is the SDO output enable.A “0” tristates SDO, a “1” enables data output on SDO. Bit 4 signals that a receive byte is available in the RxBUF Register. If the associated interrupt enable bit is enabled, an interrupt is generated.

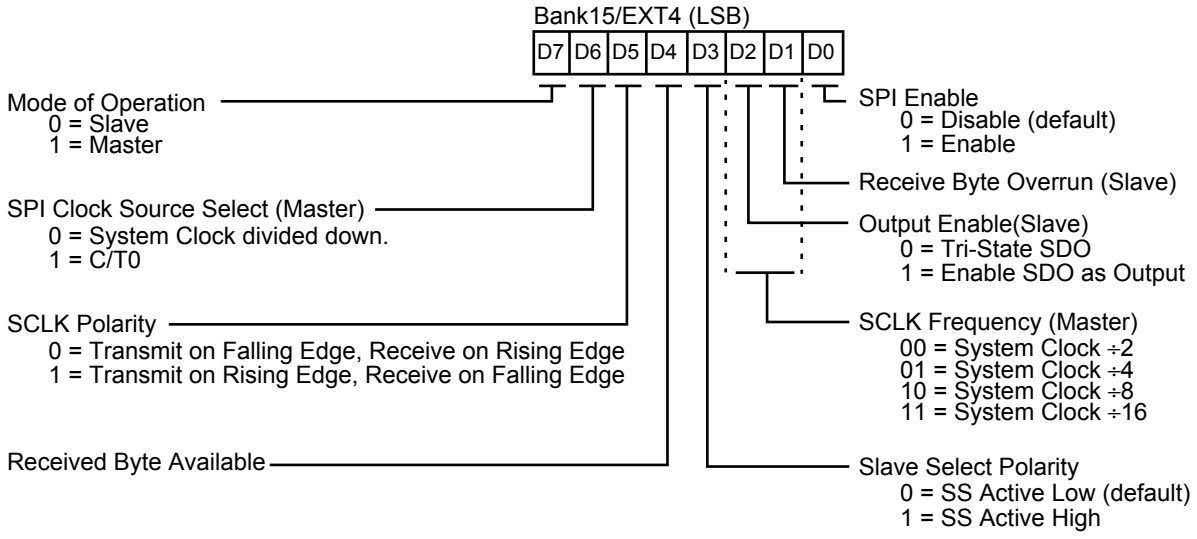

Figure 40. SPI Control Register

Master Mode Operation

The DSP must first activate the target slave’s select pin through an I/O port. Loading data into the SPI Shift Register initiates the transfer. Data is transferred out the SDO pin to the slave one data bit per SCLK cycle. The MSB is shifted out first. At the conclusion of the transfer, the Receive Byte Available flag is set, and if enabled, an SPI interrupt is generated. The Receive Byte Available flag is reset when RxBUF is read.

SERIAL PERIPHERAL INTERFACE (Continued)

Slave Mode Operation

SS must be asserted to enable a data transfer. Incoming data on the SDI pin is shifted into the SPI Shift Register one data bit per SCLK cycle. When a byte of data is received, the SPI Shift Register contents are automatically copied into RxBUF. The Receive Byte Available flag is set, and if enabled, an SPI interrupt is generated. The next byte of data may be received at this time. The current byte in RxBUF must be read before the next byte's reception is complete, or the Receive Byte Overrun flag will set, and the data in RxBUF will be overwritten. The Receive Byte Available flag is reset when RxBUF is read.

Unless the SPI output, SDO, is disabled, for every bit that is transferred into the slave through the SDI pin, a bit is transferred out through the SDO pin on the opposite clock edge. During slave operation, SCLK is an input.

Note: Slave Mode is not available on the 44-pin package.

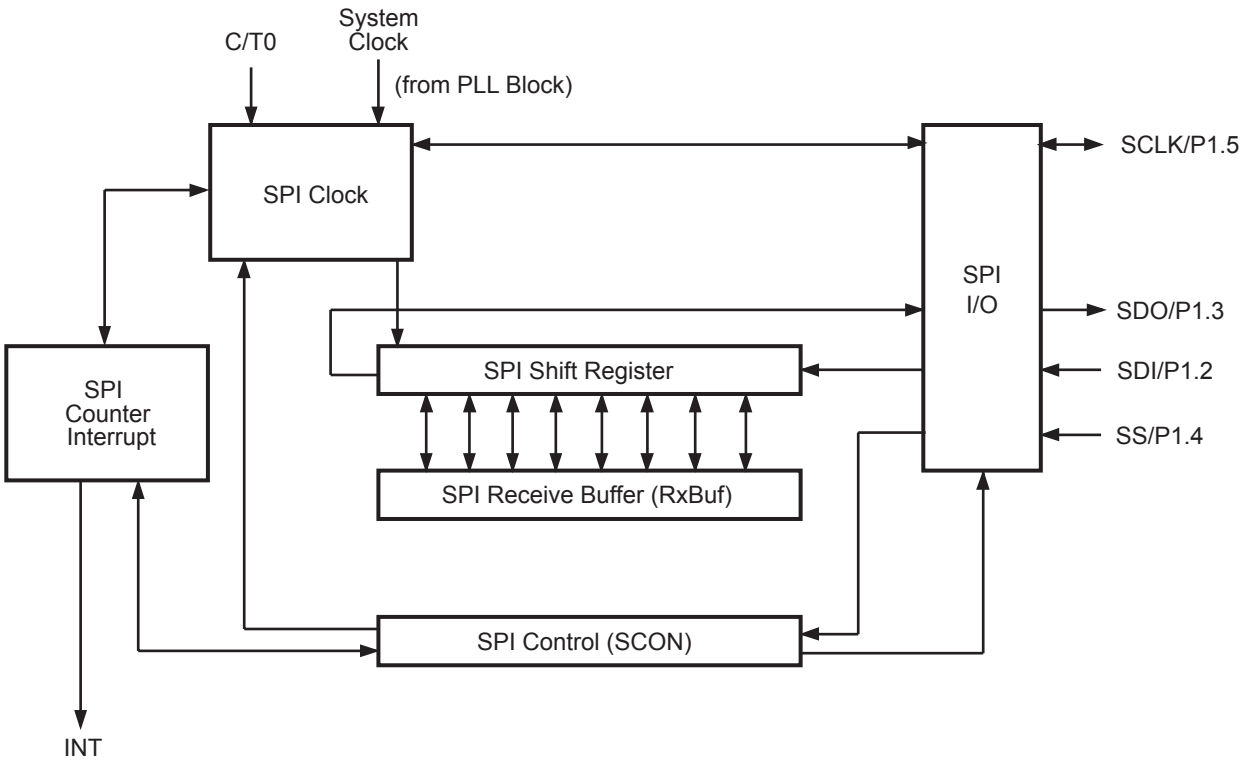

Figure 41. SPI Block Diagram

SYSTEM CLOCK GENERATOR

The System Clock can be generated from an external clock signal, or from the internal crystal oscillator. For the latter case, a 32-kHz crystal is used in conjunction with the internal crystal oscillator. The system clock generator includes a Phase-Locked Loop (PLL) circuit to derive a high-frequency System Clock from the low-frequency crystal oscillator. The benefits of using a low-frequency crystal are lower system cost, lower power consumption and lower EMI.

The Z893x3 supports several low-power clock modes to optimize power consumption. Total power consumption depends on System Clock frequency, and which oscillators and peripherals are enabled.

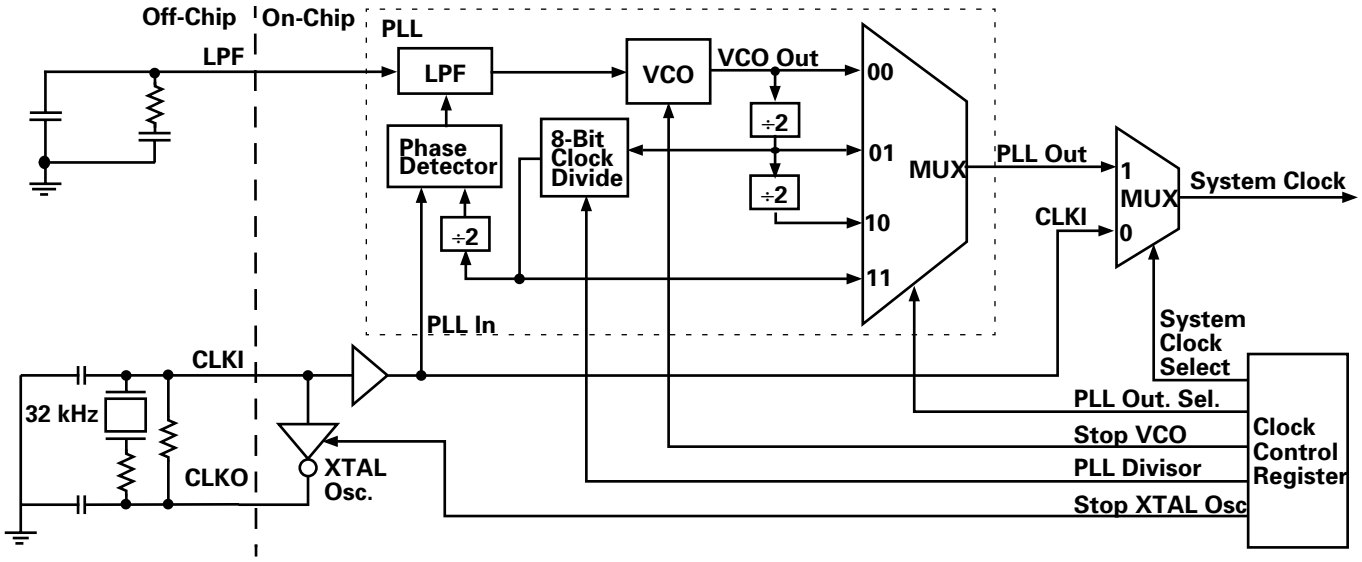

Figure 42. System Clock Generator

Modes of Operation

The various modes of clock operation are selected by writing to the appropriate bits and fields of the Clock Control Register, Bank15/EXT5. The mode of operation can be switched dynamically during program execution.

Power-up and Reset (Default)

At power-up, and following a reset or Sleep Mode Recovery, System Clock Select = 0, therefore system clock = CLKI. The XTAL Oscillator is running, so CLKI may be provided by a crystal, as depicted, or by an external clock (not shown). The VCO is running to minimize the time required to switch the system clock to PLL Out.

External Clock Direct

In this mode, an external clock on CLKI provides the System Clock. CLKO is not connected. System Clock Select = 0. The PLL is not used. The XTAL oscillator and VCO are both stopped to reduce power consumption.

Crystal Oscillator DIrect

In this mode of operation, the XTAL Oscillator is running, and an external crystal provides a 32-kHz (typical) clock at CLKI. System Clock Select = 0, so the System Clock is the frequency at CLKI (32 kHz). This mode requires less power than running at a high-frequency clock rate. The VCO may be stopped to conserve even more power, or left running for rapid switching (wake up) to a high-frequency PLL generated clock. Whenever the PLL circuit is enabled, Stop VCO = 0, and a software delay of 10 ms must be observed before switching System Clock from CLKI to PLL Out. As a result, the PLL has time to stabilize.

PLL Clock

An external 32-kHz crystal, together with the on-chip XTAL oscillator, provides the PLL input. The VCO generates the System Clock. A low-pass filter must be connected to LPF as depicted. The XTAL oscillator and VCO are both running, and System Clock = PLL Out (System Clock Select = 1). The frequency generated by the PLL is deter-

SYSTEM CLOCK GENERATOR (Continued)

mined by the PLL Divisor value in the MSB of the Clock Control Register, Bank15/EXT5:

VCO Frequency = 4 x PLL Divisor x PLL In Frequency.

The PLL Divisor value should be between 1 and156 to obtain a VCO Frequency between 128 kHz and 20 MHz from a 32-kHz input.

There are four options for PLL Out: VCO Out, VCO Out divided by 2, VCO Out divided by four, or twice the crystal frequency. This selection is determined by the PLL Out Select bits in the Clock Control Register.

Note: The PLL is designed and tested to operate with an input frequency of approximately 32 kHz. It is possible to drive the input with a crystal or user-generated clock at some other frequency, but the results are not guaranteed.

Sleep Modes

The Z893x3 supports various Clock Modes to minimize device power consumption. The lowest power mode is Deep Sleep in which the System Clock is stopped, and the VCO and XTAL Oscillator are both turned off.

Table 23. Standard Clock Mode Summary

Mode	CLKI Src	Stop XTAL Osc.	Stop VCO	Sys Clk Sel
Power-up/Reset (default)	XTAL, User	0	0	0
PLL Clock	XTAL	0	0	1
Crystal Oscillator Direct	XTAL	0	1	0
External Clock Direct	User	1	1	0
Deep Sleep (lowest power)	XTAL, User	1	1	1

Wake-Up From Sleep Modes

The Wake-up Trigger Source is specified by bits 5 and 6 of the Clock Control Register. The polarity of the Wake-up signal is defined by bit 7. Wake-up occurs when the wake-up signal is toggled to the specified wake-up polarity. Wake-up resumes operation starting from the reset vector address in the same way the chip responds to an external $\overline{\text{RESET}}$.

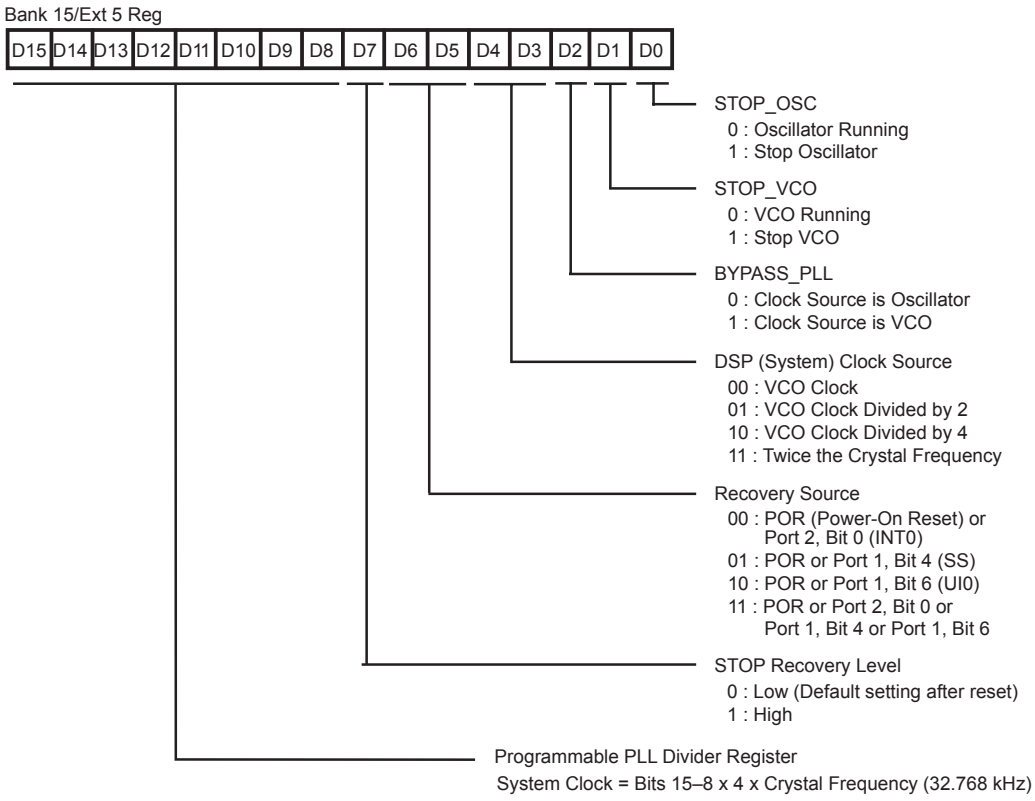

Figure 43. System Clock Control Register

INSTRUCTION SET

The addressing modes are:

<pregs>, <hwregs>. These modes are used for loads to and from registers within the chip, such as loading to the accumulator, or loading from a pointer register. The names of the registers are specified in the operand field (destination first, then source).

<dregs>. This mode is used for access to the lower 16 addresses in each bank of RAM. The 4-bit address comes from 2 bits of the status register and 2 bits of the operand field of the data pointer. Data registers can be used to access data in RAM, but typically are used as pointers to access data from the program memory.

<accind>. Similar to the previous mode, the address for the program memory read is stored in the Accumulator. Hence, @A in the second operand field loads the number in memory specified by the address in A.

<direct>. The direct mode allows read or write to data RAM from the Accumulator by specifying the absolute address of the RAM in the operand of the instruction. A number between 0 and 255 indicates a location in RAM bank 0, and a number between 256 and 511 indicates a location in RAM bank 1.

<limm>. This address mode indicates a long immediate operand. A 16-bit word can be loaded directly from the operand and into the specified register or memory location.

<simm>. This address mode indicates a short immediate operand. It is used to load 8-bit data into the specified RAM pointer.

<regind>. This mode is used for indirect access to the data RAM. The address of the RAM location is stored in the pointer. The "@" symbol indicates "indirect" and precedes the pointer. For example, @P1:1 refers to the location in RAM bank 1 specified by the value in the pointer.

<memind>. This mode is used for indirect access to the program memory. The address of the memory is located in a RAM location, which is specified by the value in a pointer. Therefore, @@P1:1 instructs the processor to read from a location in memory, which is specified by a value in RAM, and the location of the RAM is in turn specified by the value in the pointer.

Note: the data pointer can also be used for a memory access in this manner, but only one "@" precedes the pointer. In both cases, each time the addressing mode is used, the memory address stored in RAM is incremented by one to allow easy transfer of sequential data from program memory.

Table 24. Instruction Set Addressing Modes

Symbolic Name	Syntax	Description
<pregs>	Pn:b	Pointer Registers
<dregs> (points to RAM)	Dn:b	Data Registers
<hwregs>	X, Y, PC, SR, P, EDn, A, BUS	Hardware Registers
<accind> (points to Program Memory)	@A	Accumulator Memory Indirect
<direct>	<expression>	Direct Address Expression
<limm>	#<const exp>	Long (16-bit) Immediate Value
<simm>	#<const exp>	Short (8-bit) Immediate Value
<regind> (points to RAM)	@Pn:b	Pointer Register Indirect
	@Pn:b+	Pointer Register Indirect with Increment
	@Pn:b–LOOP	Pointer Register Indirect with Loop Decrement
	@Pn:b+LOOP	Pointer register Indirect with Loop Increment
<memind> (points to Program Memory)	@@Pn:b	Pointer Register Memory Indirect
	@Dn:b	Data Register Memory Indirect
	@@Pn:b–LOOP	Pointer Register Memory Indirect with Loop Decrement
	@@Pn:b+LOOP	Pointer Register Memory Indirect with Loop Increment
	@@Pn:b+	Pointer Register Memory Indirect with Increment

CONDITION CODES

The following Instruction Description defines the condition codes supported by the DSP assembler. If the instruction description refers to the <cc> (condition code) symbol in one of its addressing modes, the instruction only executes if the condition is true.

Code	Description
C	Carry
EQ	Equal (same as Z)
F	False
IE	Interrupts Enabled
MI	Minus
NC	No Carry
NE	Not Equal (same as NZ)
NIE	Not Interrupts Enabled
NOV	Not Overflow
NU0	Not User Zero
NU1	Not User One
NZ	Not zero
OV	Overflow
PL	Plus (Positive)
U0	User Zero
U1	User One
UGE	Unsigned Greater Than or Equal (Same as NC)
ULT	Unsigned Less Than (Same as C)
Z	Zero

INSTRUCTION DESCRIPTIONS

Inst.	Description	Synopsis	Operands	Words	Cycles	Examples
ABS	Absolute Value	ABS[<cc>,]<src>	<cc>,A	1	1	ABS NC, A
			A	1	1	ABS A
ADD	Addition	ADD<dest>,<src>	A,<pregs>	1	1	ADD A,P0:0
			A,<dregs>	1	1	ADD A,D0:0
			A,<limm>	2	2	ADD A,#%1234
			A,<memind>	1	3	ADD A,@@P0:0
			A,<direct>	1	1	ADD A,%F2
			A,<regind>	1	1	ADD A,@P1:1
			A,<hwregs>	1	1	ADD A,X
			A,<simm>	1	1	ADD A, #%12
AND	Bitwise AND	AND<dest>,<src>	A,<pregs>	1	1	AND A,P2:0
			A,<dregs>	1	1	AND A,D0:1
			A,<limm>	2	2	AND A,#%1234
			A,<memind>	1	3	AND A,@@P1:0
			A,<direct>	1	1	AND A,%2C
			A,<regind>	1	1	AND A,@P1:2+LOOP
			A,<hwregs>	1	1	AND A,EXT3
			A,<simm>	1	1	AND A, #%12
CALL	Subroutine call	CALL [<cc>,]<address>	<cc>,<direct>	2	2	CALL Z,sub2
			<direct>	2	2	CALL sub1
CCF	Clear C flag	CCF	None	1	1	CCF
CIEF	Clear IE Flag	CIEF	None	1	1	CIEF
COPF	Clear OP flag	COPF	None	1	1	COPF
CP	Comparison	CP<src1>,<src2>	A,<pregs>	1	1	CP A,P0:0
			A,<dregs>	1	1	CP A,D3:1
			A,<memind>	1	3	CP A,@@P0:1
			A,<direct>	1	1	CP A,%FF
			A,<regind>	1	1	CP A,@P2:1+
			A,<hwregs>	1	1	CP A,STACK
			A,<limm>	2	2	CP A,#%FFCF
			A,<simm>	1	1	CP A, #%12
DEC	Decrement	DEC [<cc>,]<dest>	<cc>A,	1	1	DEC NZ,A
			A	1	1	DEC A
INC	Increment	INC [<cc>,] <dest>	<cc>,A	1	1	INC PL,A
			A	1	1	INC A
JP	Jump	JP [<cc>,]<address>	<cc>,<direct>	2	2	JP C,Label
			<direct>	2	2	JP Label

INSTRUCTION DESCRIPTIONS (Continued)

Inst.	Description	Synopsis	Operands	Words	Cycles	Examples
LD	Load destination with source	LD<dest>,<src>	A,<hwregs>	1	1	LD A,X
			A,<dregs>	1	1	LD A,D0:0
			A,<pregs>	1	1	LD A,P0:1
			A,<regind>	1	1	LD A,@P1:1
			A,<memind>	1	3	LD A,@D0:0
			A,<direct>	1	1	LD A,124
			<direct>,A	1	1	LD 124,A
			<dregs>,<hwregs>	1	1	LD D0:0,EXT7
			<pregs>,<simm>	1	1	LD P1:1,#%FA
			<pregs>,<hwregs>	1	1	LD P1:1,EXT1
			<regind>,<limm>	1	1	LD@P1:1,#1234
			<regind>,<hwregs>	1	1	LD @P1:1+,X
			<hwregs>,<pregs>	1	1	LD Y,P0:0
			<hwregs>,<dregs>	1	1	LD SR,D0:0
			<hwregs>,<limm>	2	2	LD PC,#%1234
			<hwregs>,<accind>	1	3	LD X,@A
			<hwregs>,<memind>	1	3	LD Y,@D0:0
			<hwregs>,<regind>	1	1	LD A,@P0:0–LOOP
			<hwregs>,<hwregs>	1	1	LD X,EXT6

Notes:
When <dest> is <hwregs>, <dest> cannot be P.
When <dest> is <hwregs> and <src> is <hwregs>, <dest> cannot be EXTn if <src> is EXTn, <dest> cannot be X if <src> is X, <dest> cannot be SR if <src> is SR.
When <src> is <accind> <dest> cannot be A.

MLD	Multiply	MLD <src1>,<src2> [,<bank switch>]	<hwregs>,<regind>	1	1	MLD A,@P0:0+LOOP
			<hwregs>,<regind>,	1	1	MLD A,@P1:0,OFF
			<bank switch>	1	1	MLD @P1:1,@P2:0
			<regind>,<regind>	1	1	MLD @P0:1,@P1:0,ON
			<regind>,<regind>, <bank switch>			

Notes:
If src1 is <regind> it must be a bank 1 register. Src2's <regind must be a bank 0 register.
<hwregs> for src1 cannot be X.
For the operands <hwregs>, <regind> the <bank switch> defaults to OFF. For the operands <regind>, the <bank switch> defaults to ON.

MPYA	Multiply and add	MPYA <src1>,<src2> [,<bank switch>]	<hwregs>,<regind>	1	1	MPYA A,@P0:0
			<hwregs>,<regind>,	1	1	MPYA A,@P1:0,OFF
			<bank switch>	1	1	MPYA @P1:1,@P2:0
			<regind>,<regind>	1	1	MPYA@P0:1,@P1:0,ON
			<regind>,<regind>, <bank switch>			

Notes:
If src1 is <regind> it must be a bank 1 register. Src2's <regind> must be a bank 0 register.
<hwregs> for src1 cannot be X.
For the operands <hwregs>, <regind> the <bank switch> defaults to OFF. For the operands <regind>, the <bank switch> defaults to ON.

MPYS	Multiply and subtract	MPYS <src1>,<src2> [,<bank switch>]	<hwregs>,<regind>	1	1	MPYS A,@P0:0
			<hwregs>,<regind>,	1	1	MPYS A,@P1:0,OFF
			<bank switch>	1	1	MPYS @P1:1,@P2:0
			<regind>,<regind>	1	1	MPYS @P0:1,@P1:0,ON
			<regind>,<regind>, <bank switch>			

Inst.	Description	Synopsis	Operands	Words	Cycles	Examples
Notes: If src1 is <regind> it must be a bank 1 register. Src2's <regind> must be a bank 0 register. <hwregs> for src1 cannot be X. For the operands <hwregs>, <regind> the <bank switch> defaults to OFF. For the operands <regind>, <regind> the <bank switch> defaults to ON.						
NEG	Negate	NEG <cc>,A	<cc>, A	1	1	NEG MI,A
			A	1	1	NEG A
NOP	No operation	NOP	None	1	1	NOP
OR	Bitwise OR	OR <dest>,<src>	A,<pregs>	1	1	OR A,P0:1
			A,<dregs>	1	1	OR A, D0:1
			A,<limm>	2	2	OR A,#%2C21
			A,<memind>	1	3	OR A,@@P2:1+
			A,<direct>	1	1	OR A, %2C
			A,<regind>	1	1	OR A,@P1:0–LOOP
			A,<hwregs>	1	1	OR A,EXT6
			A,<simm>	1	1	OR A,#%12
POP	Pop value from stack	POP <dest>	<pregs>	1	1	POP P0:0
			<dregs>	1	1	POP D0:1
			<regind>	1	1	POP @P0:0
			<hwregs>	1	1	POP A
PUSH	Push value onto stack	PUSH <src>	<pregs>	1	1	PUSH P0:0
			<dregs>	1	1	PUSH D0:1
			<regind>	1	1	PUSH @P0:0
			<hwregs>	1	1	PUSH BUS
			<limm>	2	2	PUSH #12345
			<accind>	1	3	PUSH @A
			<memind>	1	3	PUSH @@P0:0
RET	Return from subroutine	RET	None	1	2	RET
RL	Rotate Left	RL <cc>,A	<cc>,A	1	1	RL NZ,A
			A	1	1	RL A
RR	Rotate Right	RR <cc>,A	<cc>,A	1	1	RR C,A
			A	1	1	RR A
SCF	Set C flag	SCF	None	1	1	SCF
SIEF	Set IE flag	SIEF	None	1	1	SIEF
SLL	Shift left logical	SLL	[<cc>,]A	1	1	SLL NZ,A
			A	1	1	SLL A
SOPF	Set OP flag	SOPF	None	1	1	SOPF
SRA	Shift right arithmetic	SRA<cc>,A	<cc>,A	1	1	SRA NZ,A
			A	1	1	SRA A
SUB	Subtract	SUB<dest>,<src>	A,<pregs>	1	1	SUB A,P1:1
			A,<dregs>	1	1	SUB A,D0:1
			A,<limm>	2	2	SUB A,#%2C2C
			A,<memind>	1	3	SUB A,@D0:1
			A,<direct>	1	1	SUB A,%15
			A,<regind>	1	1	SUB A,@P2:0–LOOP
			A,<hwregs>	1	1	SUB A,STACK
			A,<simm>	1	1	SUB A, #%12

INSTRUCTION DESCRIPTIONS (Continued)

Inst.	Description	Synopsis	Operands	Words	Cycles	Examples
XOR	Bitwise exclusive OR	XOR <dest>,<src>	A,<pregs>	1	1	XOR A,P2:0
			A,<dregs>	1	1	XOR A,D0:1
			A,<limm>	2	2	XOR A,#13933
			A,<memind>	1	3	XOR A,@@P2:1+
			A,<direct>	1	1	XOR A,%2F
			A,<regind>	1	1	XOR A,@P2:0
			A,<hwregs>	1	1	XOR A,BUS
			A,<simm>	1	1	XOR A, #%12

Bank Switch Operand. The third (optional) operand of the MLD, MPYA and MPYS instructions represents whether the bank switch is set to ON or OFF. To illustrate, the keywords ON and OFF are used to state the direction of the switch. These keywords are referenced in the instruction descriptions through the <bank switch> symbol. The most notable capability is that a source operand can be multiplied by itself (squared).

PACKAGE INFORMATION

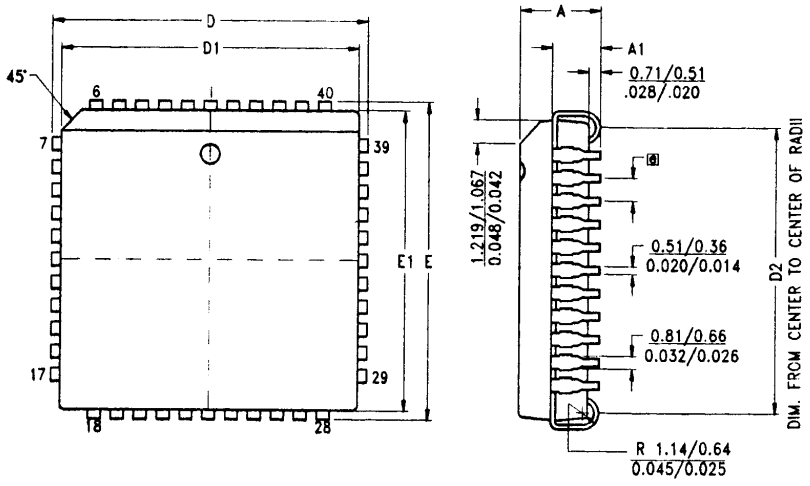

SYMBOL	MILLIMETER		INCH	
	MIN	MAX	MIN	MAX
A	4.27	4.57	0.168	0.180
A1	2.41	2.92	0.095	0.115
D/E	17.40	17.65	0.685	0.695
D1/E1	16.51	16.66	0.650	0.656
D2	15.24	16.00	0.600	0.630
e	1.27 TYP		0.050 TYP	

NOTES:
1. CONTROLLING DIMENSION : INCH
2. LEADS ARE COPLANAR WITHIN 0.004".
3. DIMENSION : MM / INCH

Figure 44. 44-Pin PLCC Package Diagram

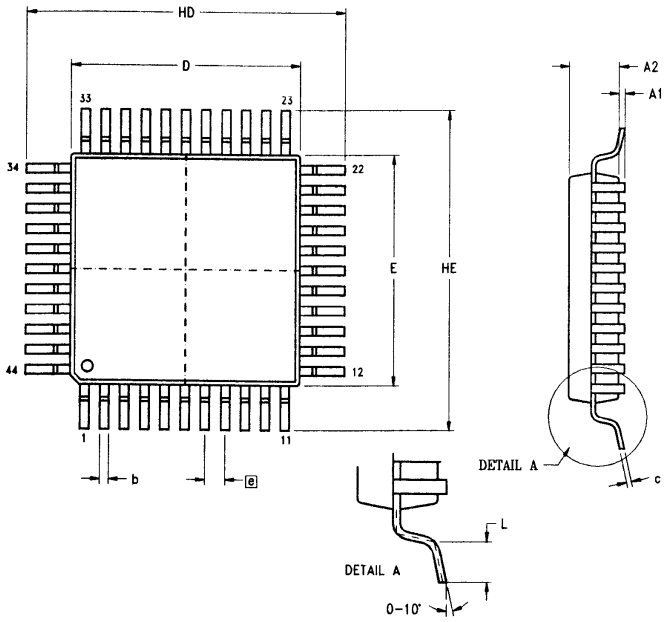

SYMBOL	MILLIMETER		INCH	
	MIN	MAX	MIN	MAX
A1	0.05	0.25	.002	.010
A2	2.00	2.25	.078	.089
b	0.25	0.45	.010	.018
c	0.13	0.20	.005	.008
HD	13.70	14.15	.539	.557
D	9.90	10.10	.390	.398
HE	13.70	14.15	.539	.557
E	9.90	10.10	.390	.398
e	0.80 TYP		.0315 TYP	
L	0.60	1.20	.024	.047

NOTES:
1. CONTROLLING DIMENSIONS : MILLIMETER
2. LEAD COPLANARITY : MAX .10 / .004"

Figure 45. 44-Pin PQFP Package Diagram

PACKAGE INFORMATION (Continued)

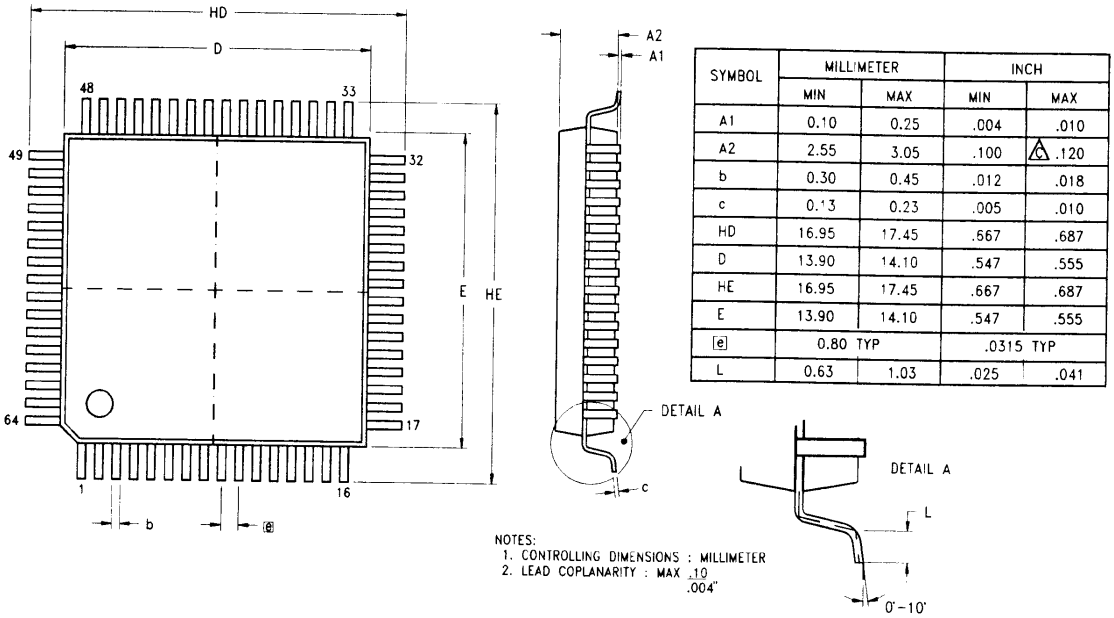

SYMBOL	MILLIMETER		INCH	
	MIN	MAX	MIN	MAX
A1	0.10	0.25	.004	.010
A2	2.55	3.05	.100	.120
b	0.30	0.45	.012	.018
c	0.13	0.23	.005	.010
HD	16.95	17.45	.667	.687
D	13.90	14.10	.547	.555
HE	16.95	17.45	.667	.687
E	13.90	14.10	.547	.555
e	0.80 TYP		.0315 TYP	
L	0.63	1.03	.025	.041

Figure 46. 64-Pin TQFP Package Diagram

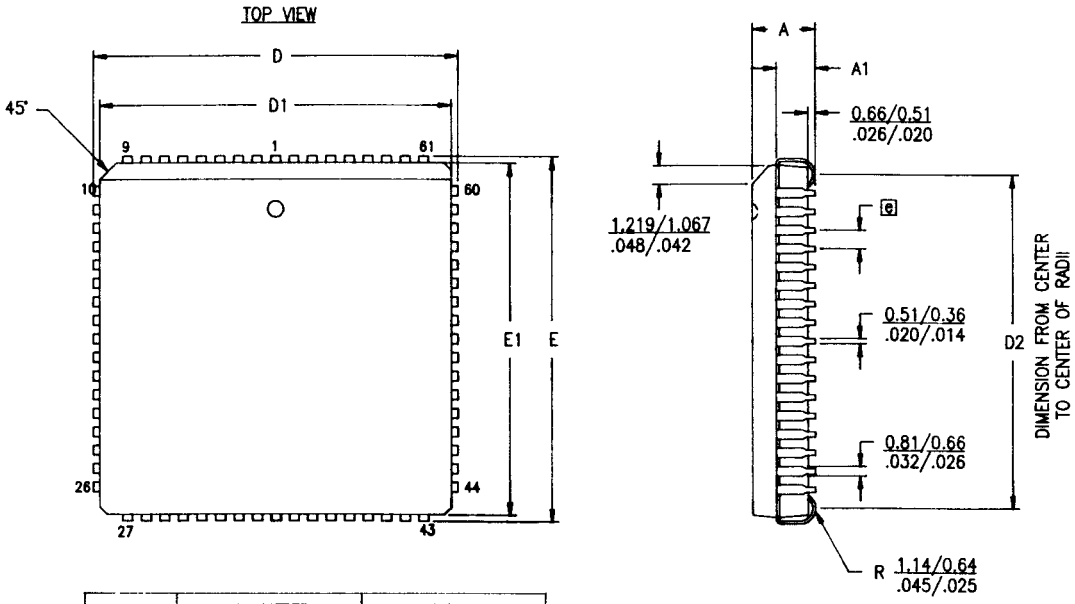

SYMBOL	MILLIMETER		INCH	
	MIN	MAX	MIN	MAX
A	4.32	4.57	.170	.180
A1	2.43	2.92	.095	.115
D/E	25.02	25.40	.985	1.000
D1/E1	24.13	24.33	.950	.958
D2	22.86	23.62	.900	.930
e	1.27 TYP		.050 TYP	

NOTES:

1. CONTROLLING DIMENSIONS : INCH
2. LEADS ARE COPLANAR WITHIN .004 IN RANGE.
3. DIMENSION : MM / INCH

Figure 47. 68-Pin PLCC Package Diagram

PACKAGE INFORMATION (Continued)

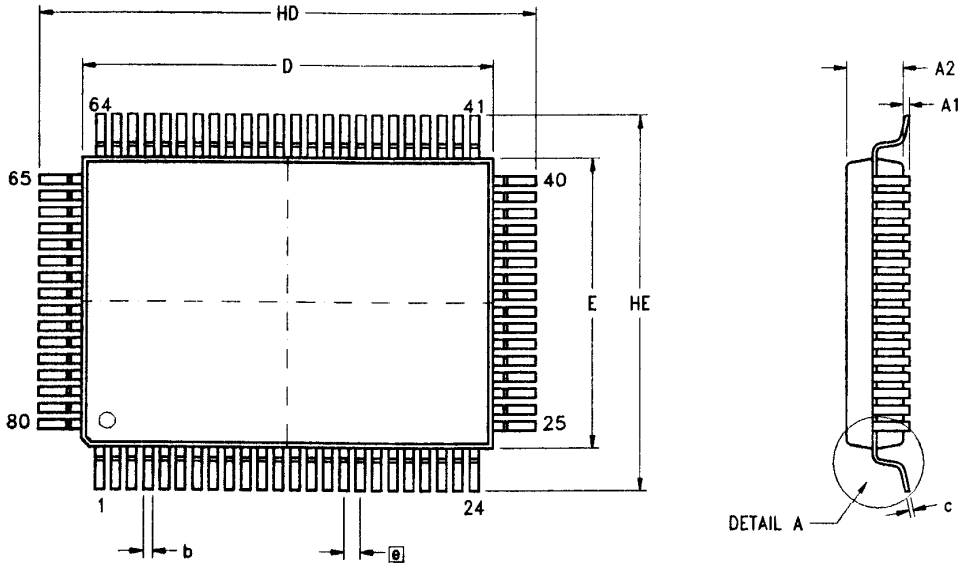

SYMBOL	MILLIMETER		INCH	
	MIN	MAX	MIN	MAX
A1	0.10	0.30	.004	.012
A2	2.60	2.80	.102	.110
b	0.30	0.45	.012	.018
c	0.13	0.20	.005	.008
HD	23.70	24.15	.933	.951
D	19.90	20.10	.783	.791
HE	17.70	18.15	.697	.715
E	13.90	14.10	.547	.555
e	0.80 TYP		.0315 TYP	
L	0.70	1.10	.028	.043

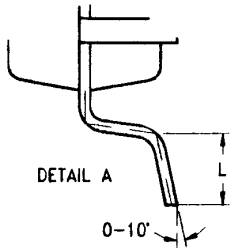

NOTES:
1. CONTROLLING DIMENSIONS: MILLIMETER
2. MAX COPLANARITY: .10/.004

Figure 48. 80-Pin PQFP Package Diagram

ORDERING INFORMATION

Package Type	ROM	OTP
44-Pin PLCC	Z8922320VSC	Z8927320VSC
	Z8922320VEC	
44-Pin PQFP	Z8922320FSC	
	Z8922320FEC	
64-Pin TQFP	Z8932320ASC	Z8937320ASC
	Z8932320AEC	
68-Pin PLCC	Z8932320VSC	Z8937320VSC
	Z8932320VEC	
80-Pin PQFP	Z8932320FSC	Z8937320FSC
	Z8932320FEC	

For fast results, contact your local ZiLOG sales office for assistance in ordering the part required.

CODES

Package	V = PLCC
	A = TQFP
	F = PQFP
Temperature	S = 0°C to +70°C
	E = –40°C to 85°C
Speed	20 = 20 MHz
Environmental	C = Plastic Standard

Example:

Z 89323 20 V S C is a Z89323, 20 MHz, PLCC, 0°C to +70°C, Plastic Standard Flow

- C — Environmental Flow
- S — Temperature
- V — Package
- 20 — Speed/Bond Out Option
- 89323 — Product Number
- Z — ZiLOG Prefix

©1999 by ZiLOG, Inc. All rights reserved. Information in this publication concerning the devices, applications, or technology described is intended to suggest possible uses and may be superseded. ZiLOG, INC. DOES NOT ASSUME LIABILITY FOR OR PROVIDE A REPRESENTATION OF ACCURACY OF THE INFORMATION, DEVICES, OR TECHNOLOGY DESCRIBED IN THIS DOCUMENT. ZiLOG ALSO DOES NOT ASSUME LIABILITY FOR INTELLECTUAL PROPERTY INFRINGEMENT RELATED IN ANY MANNER TO USE OF INFORMATION, DEVICES, OR TECHNOLOGY DESCRIBED HEREIN OR OTHERWISE. Except with the express written approval of ZiLOG, use of information, devices, or technology as critical components of life support systems is not authorized. No licenses are conveyed, implicitly or otherwise, by this document under any intellectual property rights.

ZiLOG, Inc.
910 East Hamilton Avenue, Suite 110
Campbell, CA 95008
Telephone (408) 558-8500
FAX (408) 558-8300
Internet: http://www.zilog.com

Мы молодая и активно развивающаяся компания в области поставок электронных компонентов. Мы поставляем электронные компоненты отечественного и импортного производства напрямую от производителей и с крупнейших складов мира.

Благодаря сотрудничеству с мировыми поставщиками мы осуществляем комплексные и плановые поставки широчайшего спектра электронных компонентов.

Собственная эффективная логистика и склад в обеспечивает надежную поставку продукции в точно указанные сроки по всей России.

Мы осуществляем техническую поддержку нашим клиентам и предпродажную проверку качества продукции. На все поставляемые продукты мы предоставляем гарантию .

Осуществляем поставки продукции под контролем ВП МО РФ на предприятия военно-промышленного комплекса России , а также работаем в рамках 275 ФЗ с открытием отдельных счетов в уполномоченном банке. Система менеджмента качества компании соответствует требованиям ГОСТ ISO 9001.

Минимальные сроки поставки, гибкие цены, неограниченный ассортимент и индивидуальный подход к клиентам являются основой для выстраивания долгосрочного и эффективного сотрудничества с предприятиями радиоэлектронной промышленности, предприятиями ВПК и научно-исследовательскими институтами России.

С нами вы становитесь еще успешнее!

Наши контакты:

Телефон: +7 812 627 14 35

Электронная почта: sales@st-electron.ru

Адрес: 198099, Санкт-Петербург, Промышленная ул, дом № 19, литера Н, помещение 100-Н Офис 331