SHARC Processor

ADSP-21478/ADSP-21479

SUMMARY

High performance 32-bit/40-bit floating-point processor optimized for high performance audio processing

Single-instruction, multiple-data (SIMD) computational architecture

On-chip memory—up to 5 Mbits of on-chip RAM, 4 Mbits of on-chip ROM

Up to 300 MHz operating frequency

Qualified for automotive applications. See Automotive Products on Page 68

Code compatible with all other members of the SHARC family

The ADSP-2147x processors are available with unique audio-centric peripherals, such as the digital applications interface, serial ports, precision clock generators, S/PDIF transceiver, asynchronous sample rate converters, input data port, and more.

For complete ordering information, see Ordering Guide on Page 69.

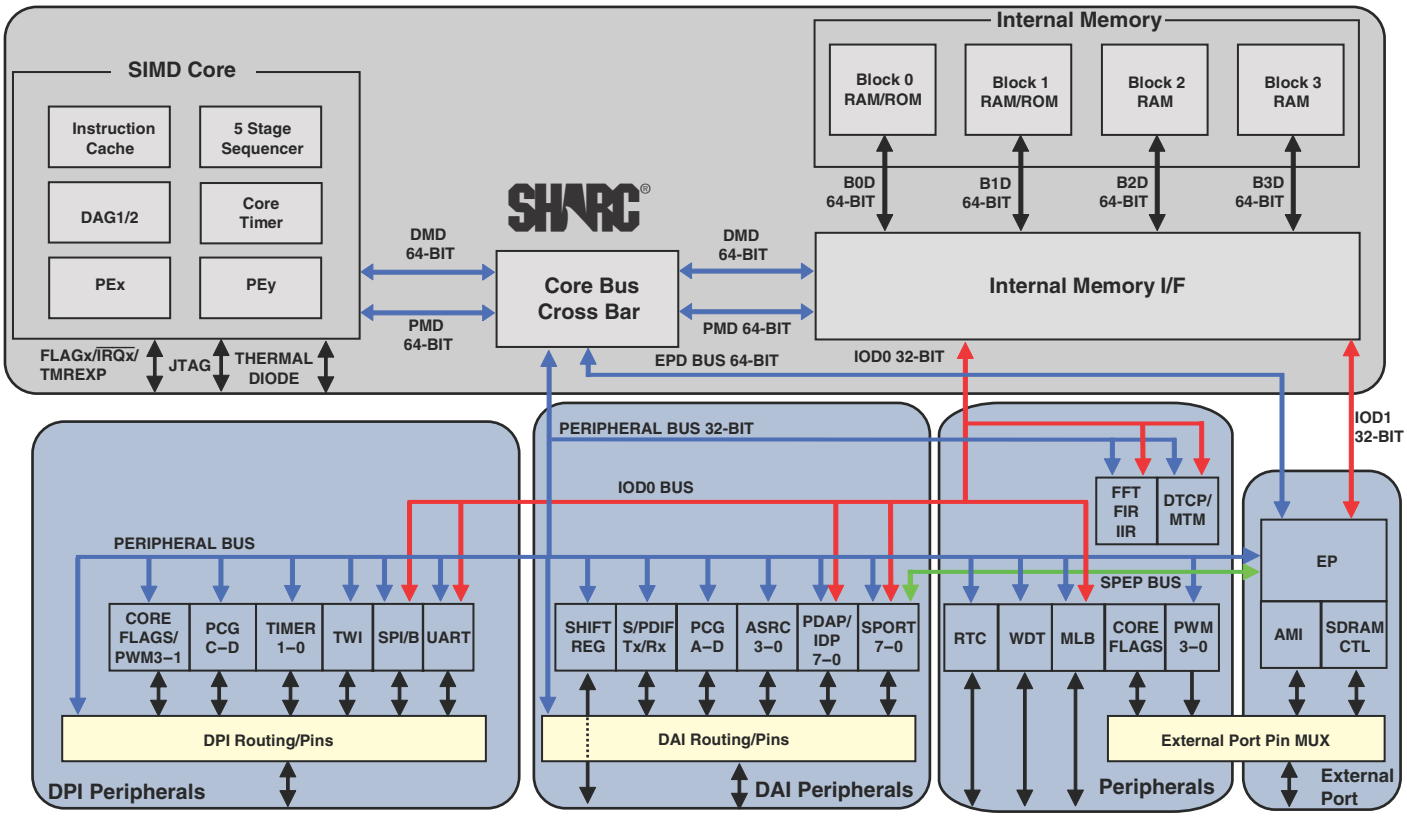

Figure 1. Functional Block Diagram

SHARC and the SHARC logo are registered trademarks of Analog Devices, Inc.

Rev. A

Information furnished by Analog Devices is believed to be accurate and reliable. However, no responsibility is assumed by Analog Devices for its use, nor for any infringements of patents or other rights of third parties that may result from its use. Specifications subject to change without notice. No license is granted by implication or otherwise under any patent or patent rights of Analog Devices. Trademarks and registered trademarks are the property of their respective companies.

One Technology Way, P.O. Box 9106, Norwood, MA 02062-9106 U.S.A.
Tel: 781.329.4700 **www.analog.com**
Fax: 781.326.3113 **©2011 Analog Devices, Inc. All rights reserved.**

TABLE OF CONTENTS

Summary 1
Product Application Restriction 2
General Description 3
Family Core Architecture 4
Family Peripheral Architecture 7
I/O Processor Features 11
System Design 12
Development Tools 12
Additional Information 13
Related Signal Chains 13
Pin Function Descriptions 14
Specifications 19
Operating Conditions 19
Electrical Characteristics 20
Package Information 22
ESD Sensitivity 22
Maximum Power Dissipation 22
Absolute Maximum Ratings 22
Timing Specifications 23
Output Drive Currents 61
Test Conditions 61
Capacitive Loading 61
Thermal Characteristics 62
100-LQFP_EP Lead Assignment 64
196-Ball BGA Ball Assignment 66
Outline Dimensions 67
Surface-Mount Design 68
Automotive Products 68
Ordering Guide 69

REVISION HISTORY

9/11—Rev. 0 to Rev. A

Corrected all outstanding document errata.

Added specifications to Shift Register 57

Added product models to Ordering Guide 69

PRODUCT APPLICATION RESTRICTION

Not for use in in-vivo applications for body fluid constituent monitoring, including monitoring one or more of the components that form, or may be a part of, or contaminate human blood or other body fluids, such as, but not limited to, carboxyhemoglobin, methemoglobin total hemoglobin, oxygen saturation, oxygen content, fractional arterial oxygen saturation, bilirubin, glucose, drugs, lipids, water, protein, and pH.

GENERAL DESCRIPTION

The ADSP-21478 and ADSP-21479 SHARC® processors are members of the SIMD SHARC family of DSPs that feature Analog Devices' Super Harvard Architecture. The processors are source code compatible with the ADSP-2126x, ADSP-2136x, ADSP-2137x, ADSP-2146x, and ADSP-2116x DSPs as well as with first generation ADSP-2106x SHARC processors in SISD (single-instruction, single-data) mode. These processors are 32-bit/40-bit floating-point processors optimized for high performance audio applications with a large on-chip SRAM, multiple internal buses to eliminate I/O bottlenecks, and an innovative digital applications interface (DAI).

Table 1 shows performance benchmarks for the ADSP-2147x processors. Table 2 shows the features of the individual product offerings.

Table 1. Processor Benchmarks

Benchmark Algorithm	Speed (at 300 MHz)
1024 Point Complex FFT (Radix 4, with Reversal)	30.59 µs
FIR Filter (per Tap)[1]	1.66 ns
IIR Filter (per Biquad)[1]	6.65 ns
Matrix Multiply (Pipelined)	
[3 × 3] × [3 × 1]	14.99 ns
[4 × 4] × [4 × 1]	26.66 ns
Divide (y/×)	11.61 ns
Inverse Square Root	18.08 ns

[1] Assumes two files in multichannel SIMD mode.

Table 2. ADSP-2147x Family Features

Feature	ADSP-21478	ADSP-21479
Frequency	Up to 300 MHz	
RAM	3 Mbit	5 Mbit
ROM	N/A	
Pulse-Width Modulation	4 Units (3 in 100-lead package)	
External Port Interface (SDRAM, AMI)[1]	Yes, 16-Bit	
Serial Ports	8	
Direct DMA from SPORTs to External Memory	Yes	
FIR, IIR, FFT Accelerator	Yes	
MediaLB Interface	Automotive Models Only	
Watch Dog Timer[2]	Yes	
Real-Time Clock[2]	Yes	
Shift Register[2]	Yes	
IDP/PDAP	Yes	
UART	1	

Table 2. ADSP-2147x Family Features (Continued)

Feature	ADSP-21478	ADSP-21479
DAI (SRU)/DPI (SRU2)	20/14 Pins	
S/PDIF Transceiver	1	
SPI	2	
TWI	1	
SRC SNR Performance	–128 dB	
Thermal Diode[3]	Yes	
VISA Support	Yes	
Package[1]	196-Ball CSP_BGA 100-Lead LQFP	

[1] The 100-lead packages of the ADSP-21478 and ADSP-21479 processors do not contain an external port. The SDRAM controller pins must be disabled when using this package. For more information, see Pin Function Descriptions on Page 15.

[2] Available on the 196-ball CSP_BGA package only.

[3] Available on the 100-lead package only.

The diagram on Page 1 shows the two clock domains (core and I/O processor) that make up the ADSP-2147x processors. The core clock domain contains the following features.

- Two processing elements (PEx, PEy), each of which comprises an ALU, multiplier, shifter, and data register file
- Two data address generators (DAG1, DAG2)
- A program sequencer with instruction cache
- PM and DM buses capable of supporting 2 × 64-bit data transfers between memory and the core at every core processor cycle
- One periodic interval timer with pinout
- On-chip SRAM (up to 5 Mbit)
- A JTAG test access port for emulation and boundary scan. The JTAG provides software debug through user breakpoints, which allows flexible exception handling.

The block diagram of the ADSP-2147x on Page 1 also shows the peripheral clock domain (also known as the I/O processor), which contains the following features:

- IOD0 (peripheral DMA) and IOD1 (external port DMA) buses for 32-bit data transfers
- Peripheral and external port buses for core connection
- External port with an asynchronous memory interface (AMI) and SDRAM controller
- 4 units for pulse width modulation (PWM) control
- 1 memory-to-memory (MTM) unit for internal-to-internal memory transfers

- Digital applications interface that includes four precision clock generators (PCG), an input data port (IDP/PDAP) for serial and parallel interconnect, an S/PDIF receiver/transmitter, four asynchronous sample rate converters, eight serial ports, a shift register, and a flexible signal routing unit (DAI SRU).
- Digital peripheral interface that includes two timers, a 2-wire interface, one UART, two serial peripheral interfaces (SPI), 2 precision clock generators (PCG), three pulse width modulation (PWM) units, and a flexible signal routing unit (DPI SRU).

As shown in the SHARC core block diagram on Page 5, the processors use two computational units to deliver a significant performance increase over the previous SHARC processors on a range of DSP algorithms. With its SIMD computational hardware, the processors can perform 1.8 GFLOPS running at 300 MHz.

FAMILY CORE ARCHITECTURE

The processors are code compatible at the assembly level with the ADSP-2146x, ADSP-2137x, ADSP-2136x, ADSP-2126x, ADSP-21160, and ADSP-21161, and with the first generation ADSP-2106x SHARC processors. The ADSP-2147x shares architectural features with the ADSP-2126x, ADSP-2136x, ADSP-2137x, ADSP-2146x, and ADSP-2116x SIMD SHARC processors, as shown in Figure 2 and detailed in the following sections.

SIMD Computational Engine

The processors contain two computational processing elements that operate as a single-instruction, multiple-data (SIMD) engine. The processing elements are referred to as PEX and PEY and each contains an ALU, multiplier, shifter, and register file. PEX is always active, and PEY may be enabled by setting the PEYEN mode bit in the MODE1 register. SIMD mode allows the processor to execute the same instruction in both processing elements, but each processing element operates on different data. This architecture is efficient at executing math intensive DSP algorithms.

SIMD mode also affects the way data is transferred between memory and the processing elements because twice the data bandwidth is required to sustain computational operation in the processing elements. Therefore, entering SIMD mode also doubles the bandwidth between memory and the processing elements. When using the DAGs to transfer data in SIMD mode, two data values are transferred with each memory or register file access.

SIMD mode is supported from external SDRAM but is not supported in the AMI.

Independent, Parallel Computation Units

Within each processing element is a set of computational units. The computational units consist of an arithmetic/logic unit (ALU), multiplier, and shifter. These units perform all operations in a single cycle. The three units within each processing element are arranged in parallel, maximizing computational throughput. Single multifunction instructions execute parallel ALU and multiplier operations. In SIMD mode, the parallel ALU and multiplier operations occur in both processing elements. These computation units support IEEE 32-bit single-precision floating-point, 40-bit extended precision floating-point, and 32-bit fixed-point data formats.

Timer

The processor contains a core timer that can generate periodic software interrupts. The core timer can be configured to use FLAG3 as a timer expired signal.

Data Register File

Each processing element contains a general-purpose data register file. The register files transfer data between the computation units and the data buses, and store intermediate results. These 10-port, 32-register (16 primary, 16 secondary) register files, combined with the processor's enhanced Harvard architecture, allow unconstrained data flow between computation units and internal memory. The registers in PEX are referred to as R0–R15 and in PEY as S0–S15.

Context Switch

Many of the processor's registers have secondary registers that can be activated during interrupt servicing for a fast context switch. The data registers in the register file, the DAG registers, and the multiplier result registers all have secondary registers. The primary registers are active at reset, while the secondary registers are activated by control bits in a mode control register.

Universal Registers

Universal registers can be used for general-purpose tasks. The USTAT (4) registers allow easy bit manipulations (Set, Clear, Toggle, Test, XOR) for all peripheral control and status registers.

The data bus exchange register (PX) permits data to be passed between the 64-bit PM data bus and the 64-bit DM data bus, or between the 40-bit register file and the PM/DM data bus. These registers contain hardware to handle the data width difference.

Single-Cycle Fetch of Instruction and Four Operands

The processors feature an enhanced Harvard architecture in which the data memory (DM) bus transfers data and the program memory (PM) bus transfers both instructions and data (see Figure 2). With its separate program and data memory buses and on-chip instruction cache, the processor can simultaneously fetch four operands (two over each data bus) and one instruction (from the cache), all in a single cycle.

Instruction Cache

The processor includes an on-chip instruction cache that enables three-bus operation for fetching an instruction and four data values. The cache is selective—only the instructions whose fetches conflict with PM bus data accesses are cached. This cache allows full speed execution of core looped operations such as digital filter multiply-accumulates, and FFT butterfly processing.

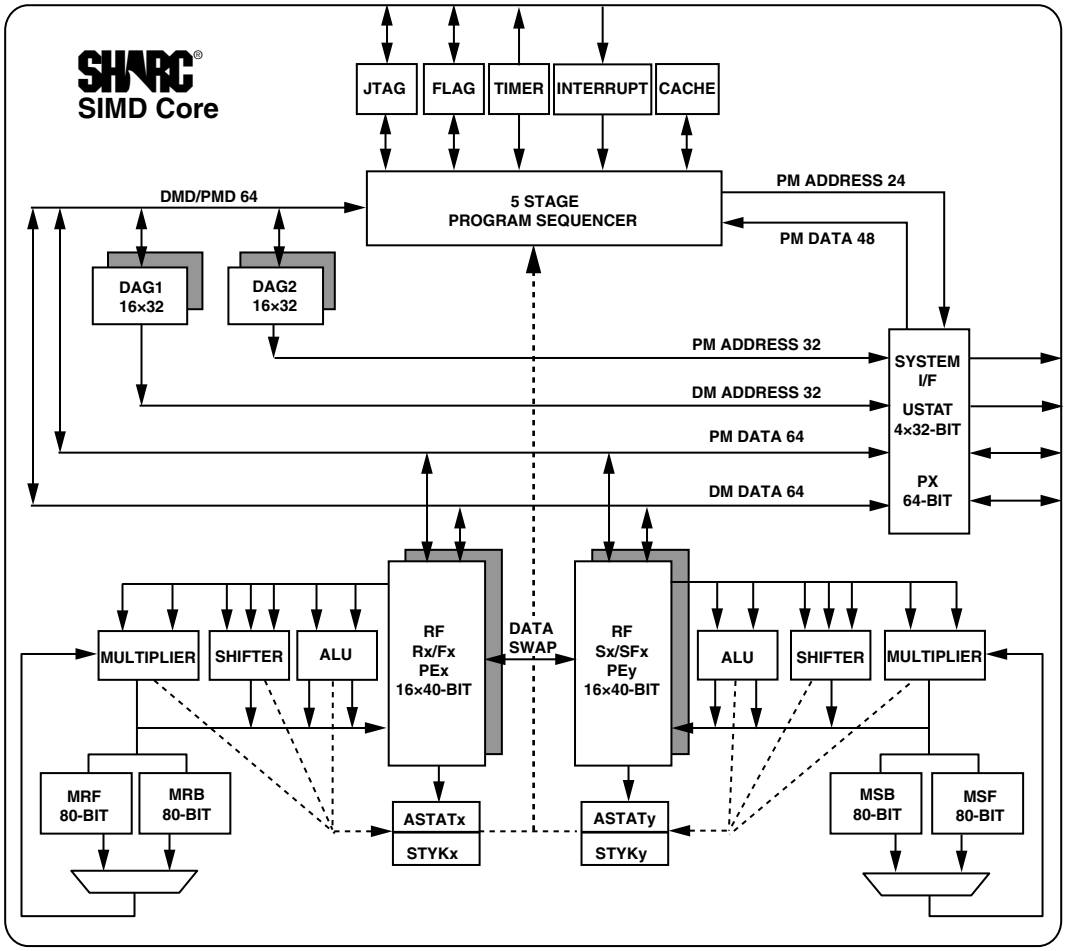

Figure 2. SHARC Core Block Diagram

Data Address Generators with Zero-Overhead Hardware Circular Buffer Support

The processor's two data address generators (DAGs) are used for indirect addressing and implementing circular data buffers in hardware. Circular buffers allow efficient programming of delay lines and other data structures required in digital signal processing, and are commonly used in digital filters and Fourier transforms. The two DAGs of the processors contain sufficient registers to allow the creation of up to 32 circular buffers (16 primary register sets, 16 secondary). The DAGs automatically handle address pointer wraparound, reduce overhead, increase performance, and simplify implementation. Circular buffers can start and end at any memory location.

Flexible Instruction Set

The 48-bit instruction word accommodates a variety of parallel operations, for concise programming. For example, the processors can conditionally execute a multiply, an add, and a subtract in both processing elements while branching and fetching up to four 32-bit values from memory—all in a single instruction.

Variable Instruction Set Architecture (VISA)

In addition to supporting the standard 48-bit instructions from previous SHARC processors, the processors support new instructions of 16 and 32 bits. This feature, called Variable Instruction Set Architecture (VISA), drops redundant/unused bits within the 48-bit instruction to create more efficient and compact code. The program sequencer supports fetching these 16-bit and 32-bit instructions from both internal and external SDRAM memory. This support is not extended to the asynchronous memory interface (AMI). Source modules need to be built using the VISA option, in order to allow code generation tools to create these more efficient opcodes.

On-Chip Memory

The ADSP-21478 processor contains 3 Mbits of internal RAM (Table 3) and the ADSP-21479 processor contains 5 Mbits of internal RAM (Table 4). Each block can be configured for different combinations of code and data storage. Each memory block supports single-cycle, independent accesses by the core processor and I/O processor.

The processor's SRAM can be configured as a maximum of 160k words of 32-bit data, 320k words of 16-bit data, 106.7k words of 48-bit instructions (or 40-bit data), or combinations of different word sizes up to 5 megabits. All of the memory can be accessed as 16-bit, 32-bit, 48-bit, or 64-bit words. A 16-bit floating-point storage format is supported that effectively doubles the amount of data that may be stored on-chip. Conversion between the 32-bit floating-point and 16-bit floating-point formats is performed in a single instruction. While each memory block can store combinations of code and data, accesses are most efficient when one block stores data using the DM bus for transfers, and the other block stores instructions and data using the PM bus for transfers.

Using the DM bus and PM buses, with one bus dedicated to a memory block, assures single-cycle execution with two data transfers. In this case, the instruction must be available in the cache.

The memory maps in Table 3 and Table 4 display the internal memory address space of the processors. The 48-bit space section describes what this address range looks like to an instruction that retrieves 48-bit memory. The 32-bit section describes what this address range looks like to an instruction that retrieves 32-bit memory.

On-Chip Memory Bandwidth

The internal memory architecture allows programs to have four accesses at the same time to any of the four blocks (assuming there are no block conflicts). The total bandwidth is realized using the DMD and PMD buses (2 × 64-bits at CCLK speed) and the IOD0/1 buses (2 × 32-bit at PCLK speed).

Table 3. ADSP-21478 Internal Memory Space (3 Mbit)[1]

IOP Registers 0x0000 0000–0x0003 FFFF			
Long Word (64 Bits)	**Extended Precision Normal or Instruction Word (48 Bits)**	**Normal Word (32 Bits)**	**Short Word (16 Bits)**
Block 0 ROM (Reserved) 0x0004 0000–0x0004 7FFF	Block 0 ROM (Reserved) 0x0008 0000–0x0008 AAA9	Block 0 ROM (Reserved) 0x0008 0000–0x0008 FFFF	Block 0 ROM (Reserved) 0x0010 0000–0x0011 FFFF
Reserved 0x0004 8000–0x0004 8FFF	Reserved 0x0008 AAAA–0x0008 BFFF	Reserved 0x0009 0000–0x0009 1FFF	Reserved 0x0012 0000–0x0012 3FFF
Block 0 SRAM 0x0004 9000–0x0004 CFFF	Block 0 SRAM 0x0008 C000–0x0009 1554	Block 0 SRAM 0x0009 2000–0x0009 9FFF	Block 0 SRAM 0x0012 4000–0x0013 3FFF
Reserved 0x0004 D000–0x0004 FFFF	Reserved 0x0009 1555–0x0009 FFFF	Reserved 0x0009 A000–0x0009 FFFF	Reserved 0x0013 4000–0x0013 FFFF
Block 1 ROM (Reserved) 0x0005 0000–0x0005 7FFF	Block 1 ROM (Reserved) 0x000A 0000–0x000A AAA9	Block 1 ROM (Reserved) 0x000A 0000–0x000A FFFF	Block 1 ROM (Reserved) 0x0014 0000–0x0015 FFFF
Reserved 0x0005 8000–0x0005 8FFF	Reserved 0x000A AAAA–0x000A BFFF	Reserved 0x000B 0000–0x000B 1FFF	Reserved 0x0016 0000–0x0016 3FFF
Block 1 SRAM 0x0005 9000–0x0005 CFFF	Block 1 SRAM 0x000A C000–0x000B 1554	Block 1 SRAM 0x000B 2000–0x000B 9FFF	Block 1 SRAM 0x0016 4000–0x0017 3FFF
Reserved 0x0005 D000–0x0005 FFFF	Reserved 0x000B 1555–0x000B FFFF	Reserved 0x000B A000–0x000B FFFF	Reserved 0x0017 4000–0x0017 FFFF
Block 2 SRAM 0x0006 0000–0x0006 1FFF	Block 2 SRAM 0x000C 0000–0x000C 2AA9	Block 2 SRAM 0x000C 0000–0x000C 3FFF	Block 2 SRAM 0x0018 0000–0x0018 7FFF
Reserved 0x0006 2000– 0x0006 FFFF	Reserved 0x000C 2AAA–0x000D FFFF	Reserved 0x000C 4000–0x000D FFFF	Reserved 0x0018 8000–0x001B FFFF
Block 3 SRAM 0x0007 0000–0x0007 1FFF	Block 3 SRAM 0x000E 0000–0x000E 2AA9	Block 3 SRAM 0x000E 0000–0x000E 3FFF	Block 3 SRAM 0x001C 0000–0x001C 7FFF
Reserved 0x0007 2000–0x0007 FFFF	Reserved 0x000E 2AAA–0x000F FFFF	Reserved 0x000E 4000–0x000F FFFF	Reserved 0x001C 8000–0x001F FFFF

[1] Some processors include a customer-definable ROM block. ROM addresses on these models are not reserved as shown in this table. Please contact your Analog Devices sales representative for additional details.

Table 4. ADSP-21479 Internal Memory Space (5 Mbit)[1]

IOP Registers 0x0000 0000–0x0003 FFFF			
Long Word (64 Bits)	**Extended Precision Normal or Instruction Word (48 Bits)**	**Normal Word (32 Bits)**	**Short Word (16 Bits)**
Block 0 ROM (Reserved) 0x0004 0000–0x0004 7FFF	Block 0 ROM (Reserved) 0x0008 0000–0x0008 AAA9	Block 0 ROM (Reserved) 0x0008 0000–0x0008 FFFF	Block 0 ROM (Reserved) 0x0010 0000–0x0011 FFFF
Reserved 0x0004 8000–0x0004 8FFF	Reserved 0x0008 AAAA–0x0008 BFFF	Reserved 0x0009 0000–0x0009 1FFF	Reserved 0x0012 0000–0x0012 3FFF
Block 0 SRAM 0x0004 9000–0x0004 EFFF	Block 0 SRAM 0x0008 C000–0x0009 3FFF	Block 0 SRAM 0x0009 2000–0x0009 DFFF	Block 0 SRAM 0x0012 4000–0x0013 BFFF
Reserved 0x0004 F000–0x0004 FFFF	Reserved 0x0009 4000–0x0009 FFFF	Reserved 0x0009 E000–0x0009 FFFF	Reserved 0x0013 C000–0x0013 FFFF
Block 1 ROM (Reserved) 0x0005 0000–0x0005 7FFF	Block 1 ROM (Reserved) 0x000A 0000–0x000A AAA9	Block 1 ROM (Reserved) 0x000A 0000–0x000AFFFF	Block 1 ROM (Reserved) 0x0014 0000–0x0015 FFFF
Reserved 0x0005 8000–0x0005 8FFF	Reserved 0x000A AAAA–0x000A BFFF	Reserved 0x000B 0000–0x000B 1FFF	Reserved 0x0016 0000–0x0016 3FFF
Block 1 SRAM 0x0005 9000–0x0005 EFFF	Block 1 SRAM 0x000A C000–0x000B 3FFF	Block 1 SRAM 0x000B 2000–0x000B DFFF	Block 1 SRAM 0x0016 4000–0x0017 BFFF
Reserved 0x0005 F000–0x0005 FFFF	Reserved 0x000B 4000–0x000B FFFF	Reserved 0x000B E000–0x000B FFFF	Reserved 0x0017 C000–0x0017 FFFF
Block 2 SRAM 0x0006 0000–0x0006 3FFF	Block 2 SRAM 0x000C 0000–0x000C 5554	Block 2 SRAM 0x000C 0000–0x000C 7FFF	Block 2 SRAM 0x0018 0000–0x0018 FFFF
Reserved 0x0006 4000– 0x0006 FFFF	Reserved 0x000C 5555–0x0000D FFFF	Reserved 0x000C 8000–0x000D FFFF	Reserved 0x0019 0000–0x001B FFFF
Block 3 SRAM 0x0007 0000–0x0007 3FFF	Block 3 SRAM 0x000E 0000–0x000E 5554	Block 3 SRAM 0x000E 0000–0x000E 7FFF	Block 3 SRAM 0x001C 0000–0x001C FFFF
Reserved 0x0007 4000–0x0007 FFFF	Reserved 0x000E 5555–0x0000F FFFF	Reserved 0x000E 8000–0x000F FFFF	Reserved 0x001D 0000–0x001F FFFF

[1] Some processors include a customer-definable ROM block. ROM addresses on these models are not reserved as shown in this table. Please contact your Analog Devices sales representative for additional details.

ROM Based Security

The processors have a ROM security feature that provides hardware support for securing user software code by preventing unauthorized reading from the internal code. When using this feature, the processors do not boot-load any external code, executing exclusively from internal ROM. Additionally, the processor is not freely accessible via the JTAG port. Instead, a unique 64-bit key, which must be scanned in through the JTAG or Test Access Port, is assigned to each customer. The device ignores an incorrect key. Emulation features are available after the correct key is scanned.

Digital Transmission Content Protection

The DTCP specification defines a cryptographic protocol for protecting audio entertainment content from illegal copying, intercepting, and tampering as it traverses high performance digital buses, such as the IEEE 1394 standard. Only legitimate entertainment content delivered to a source device via another approved copy protection system (such as the DVD content scrambling system) is protected by this copy protection system. For more information on this feature, contact your local ADI sales office.

FAMILY PERIPHERAL ARCHITECTURE

The ADSP-2147x family contains a rich set of peripherals that support a wide variety of applications including high quality audio, medical imaging, communications, military, test equipment, 3D graphics, speech recognition, motor control, imaging, and other applications.

External Memory

The external memory interface supports access to the external memory through core and DMA accesses. The external memory address space is divided into four banks. Any bank can be programmed as either asynchronous or synchronous memory. The external ports are comprised of the following modules.

- An AMI which communicates with SRAM, FLASH, and other devices that meet the standard asynchronous SRAM access protocol. The AMI supports 6M words of external memory in bank 0 and 8M words of external memory in bank 1, bank 2, and bank 3.
- An SDRAM controller that supports a glueless interface with any of the standard SDRAMs. The SDC supports 62M words of external memory in bank 0, and 64M words of external memory in bank 1, bank 2, and bank 3.
- Arbitration logic to coordinate core and DMA transfers between internal and external memory over the external port.

External Port

The external port provides a high performance, glueless interface to a wide variety of industry-standard memory devices. The external port, available on the 196-ball CSP_BGA, may be used to interface to synchronous and/or asynchronous memory devices through the use of its separate internal memory controllers. The first is an SDRAM controller for connection of industry-standard synchronous DRAM devices while the second is an asynchronous memory controller intended to interface to a variety of memory devices. Four memory select pins enable up to four separate devices to coexist, supporting any desired combination of synchronous and asynchronous device types. Non-SDRAM external memory address space is shown in Table 5.

Table 5. External Memory for Non-SDRAM Addresses

Bank	Size in Words	Address Range
Bank 0	6M	0x0020 0000–0x007F FFFF
Bank 1	8M	0x0400 0000–0x047F FFFF
Bank 2	8M	0x0800 0000–0x087F FFFF
Bank 3	8M	0x0C00 0000–0x0C7F FFFF

SIMD Access to External Memory

The SDRAM controller supports SIMD access on the 64-bit external port data bus (EPD) which allows access to the complementary registers on the PEy unit in the normal word space (NW). This improves performance since there is no need to explicitly load the complimentary registers (as in SISD mode).

VISA and ISA Access to External Memory

The SDRAM controller supports VISA code operation which reduces the memory load since the VISA instructions are compressed. Moreover, bus fetching is reduced because, in the best case, one 48-bit fetch contains three valid instructions. Code execution from the traditional ISA operation is also supported. Note that code execution is only supported from bank 0 regardless of VISA/ISA. Table 6 shows the address ranges for instruction fetch in each mode.

Table 6. External Bank 0 Instruction Fetch

Access Type	Size in Words	Address Range
ISA (NW)	4M	0x0020 0000–0x005F FFFF
VISA (SW)	10M	0x0060 0000–0x00FF FFFF

SDRAM Controller

The SDRAM controller, available on the ADSP-2147x in the 196-ball CSP_BGA package, provides an interface of up to four separate banks of industry-standard SDRAM devices or DIMMs, at speeds up to f_{SDCLK}. Fully compliant with the SDRAM standard, each bank has its own memory select line ($\overline{MS0}$–$\overline{MS3}$), and can be configured to contain between 4M bytes and 256M bytes of memory. SDRAM external memory address space is shown in Table 7.

Table 7. External Memory for SDRAM Addresses

Bank	Size in Words	Address Range
Bank 0	62M	0x0020 0000–0x03FF FFFF
Bank 1	64M	0x0400 0000–0x07FF FFFF
Bank 2	64M	0x0800 0000–0x0BFF FFFF
Bank 3	64M	0x0C00 0000–0x0FFF FFFF

A set of programmable timing parameters is available to configure the SDRAM banks to support slower memory devices. The SDRAM and the AMI interface do not support 32-bit wide devices.

The SDRAM controller address, data, clock, and control pins can drive loads up to distributed 30 pF. For larger memory systems, the SDRAM controller external buffer timing should be selected and external buffering should be provided so that the load on the SDRAM controller pins does not exceed 30 pF.

Note that the external memory bank addresses shown are for normal-word (32-bit) accesses. If 48-bit instructions as well as 32-bit data are both placed in the same external memory bank, care must be taken while mapping them to avoid overlap.

Asynchronous Memory Controller

The asynchronous memory controller, available on the ADSP-2147x in the 196-ball CSP_BGA package, provides a configurable interface for up to four separate banks of memory or I/O devices. Each bank can be independently programmed with different timing parameters, enabling connection to a wide variety of memory devices including SRAM, flash, and EPROM, as well as I/O devices that interface with standard memory control lines. Bank 0 occupies a 6M word window and banks 1, 2, and 3 occupy a 8M word window in the processor's address space but, if not fully populated, these windows are not made contiguous by the memory controller logic.

External Port Throughput

The throughput for the external port, based on 133 MHz clock and 16-bit data bus, is 88 M bytes/s for the AMI and 266 M bytes/s for SDRAM.

MediaLB

The automotive models of the processors have an MLB interface which allows the processor to function as a media local bus device. It includes support for both 3-pin and 5-pin media local bus protocols. It supports speeds up to 1024 FS (49.25 M bits/sec, FS = 48.1 kHz) and up to 31 logical channels, with up to 124 bytes of data per media local bus frame. For a list of automotive products, see Automotive Products on Page 68.

Digital Applications Interface (DAI)

The digital applications interface (DAI) provides the ability to connect various peripherals to any of the DAI pins (DAI_P20–1).

Programs make these connections using the signal routing unit (SRU), shown in Figure 1.

The SRU is a matrix routing unit (or group of multiplexers) that enables the peripherals provided by the DAI to be interconnected under software control. This allows easy use of the DAI associated peripherals for a much wider variety of applications by using a larger set of algorithms than is possible with nonconfigurable signal paths.

The associated peripherals include eight serial ports, four precision clock generators (PCG), a S/PDIF transceiver, four ASRCs, and an input data port (IDP). The IDP provides an additional input path to the SHARC core, configurable as either eight channels of serial data, or a single 20-bit wide synchronous parallel data acquisition port. Each data channel has its own DMA channel that is independent from the processor's serial ports.

Serial Ports (SPORTs)

The processors feature eight synchronous serial ports that provide an inexpensive interface to a wide variety of digital and mixed-signal peripheral devices such as Analog Devices' AD183x family of audio codecs, ADCs, and DACs. The serial ports are made up of two data lines, a clock, and frame sync. The data lines can be programmed to either transmit or receive and each data line has a dedicated DMA channel.

Serial ports can support up to 16 transmit or 16 receive DMA channels of audio data when all eight SPORTs are enabled, or four full duplex TDM streams of 128 channels per frame.

Serial port data can be automatically transferred to and from on-chip memory/external memory via dedicated DMA channels. Each of the serial ports can work in conjunction with another serial port to provide TDM support. One SPORT provides two transmit signals while the other SPORT provides the two receive signals. The frame sync and clock are shared.

Serial ports operate in five modes:

- Standard serial mode
- Multichannel (TDM) mode
- I^2S mode
- Packed I^2S mode
- Left-justified mode

S/PDIF-Compatible Digital Audio Receiver/Transmitter

The S/PDIF receiver/transmitter has no separate DMA channels. It receives audio data in serial format and converts it into a biphase encoded signal. The serial data input to the receiver/transmitter can be formatted as left justified, I^2S or right-justified with word widths of 16, 18, 20, or 24 bits.

The serial data, clock, and frame sync inputs to the S/PDIF receiver/transmitter are routed through the signal routing unit (SRU). They can come from a variety of sources, such as the SPORTs, external pins, the precision clock generators (PCGs), and are controlled by the SRU control registers.

Asynchronous Sample Rate Converter (SRC)

The sample rate converter contains four blocks and is the same core as that used in the AD1896 192 kHz stereo asynchronous sample rate converter. The SRC block provides up to 128 dB SNR and is used to perform synchronous or asynchronous sample rate conversion across independent stereo channels, without using internal processor resources. The four SRC blocks can also be configured to operate together to convert multichannel audio data without phase mismatches. Finally, the SRC can be used to clean up audio data from jittery clock sources such as the S/PDIF receiver.

Input Data Port

The IDP provides up to eight serial input channels—each with its own clock, frame sync, and data inputs. The eight channels are automatically multiplexed into a single 32-bit by eight-deep FIFO. Data is always formatted as a 64-bit frame and divided into two 32-bit words. The serial protocol is designed to receive audio channels in I^2S, left-justified sample pair, or right-justified mode.

The IDP also provides a parallel data acquisition port (PDAP) which can be used for receiving parallel data. The PDAP port has a clock input and a hold input. The data for the PDAP can be received from DAI pins or from the external port pins. The PDAP supports a maximum of 20-bit data and four different packing modes to receive the incoming data.

Precision Clock Generators

The precision clock generators (PCG) consist of four units, each of which generates a pair of signals (clock and frame sync) derived from a clock input signal. The units, A B, C, and D, are identical in functionality and operate independently of each other. The two signals generated by each unit are normally used as a serial bit clock/frame sync pair.

The outputs of PCG A and B can be routed through the DAI pins and the outputs of PCG C and D can be driven on to the DAI as well as the DPI pins.

Digital Peripheral Interface (DPI)

The digital peripheral interface provides connections to two serial peripheral interface ports (SPI), one universal asynchronous receiver-transmitter (UART), 12 flags, a 2-wire interface (TWI), three PWM modules (PWM3–1), and two general-purpose timers.

Serial Peripheral (Compatible) Interface (SPI)

The SPI is an industry-standard synchronous serial link, enabling the SPI-compatible port to communicate with other SPI compatible devices. The SPI consists of two data pins, one device select pin, and one clock pin. It is a full-duplex synchronous serial interface, supporting both master and slave modes. The SPI port can operate in a multimaster environment by interfacing with up to four other SPI-compatible devices, either acting as a master or slave device. The SPI-compatible peripheral implementation also features programmable baud rate and clock phase and polarities. The SPI-compatible port uses open drain drivers to support a multimaster configuration and to avoid data contention.

UART Port

The processors provide a full-duplex Universal Asynchronous Receiver/Transmitter (UART) port, which is fully compatible with PC-standard UARTs. The UART port provides a simplified UART interface to other peripherals or hosts, supporting full-duplex, DMA-supported, asynchronous transfers of serial data. The UART also has multiprocessor communication capability using 9-bit address detection. This allows it to be used in multidrop networks through the RS-485 data interface standard. The UART port also includes support for 5 to 8 data bits, 1 or 2 stop bits, and none, even, or odd parity. The UART port supports two modes of operation:

- PIO (programmed I/O) – The processor sends or receives data by writing or reading I/O-mapped UART registers. The data is double-buffered on both transmit and receive.
- DMA (direct memory access) – The DMA controller transfers both transmit and receive data. This reduces the number and frequency of interrupts required to transfer data to and from memory. The UART has two dedicated DMA channels, one for transmit and one for receive. These DMA channels have lower default priority than most DMA channels because of their relatively low service rates.

The UART port's baud rate, serial data format, error code generation and status, and interrupts are programmable:

- Support for bit rates ranging from (f_{PCLK}/1,048,576) to (f_{PCLK}/16) bits per second.
- Support for data formats from 7 to 12 bits per frame.
- Both transmit and receive operations can be configured to generate maskable interrupts to the processor.

In conjunction with the general-purpose timer functions, autobaud detection is supported.

Pulse-Width Modulation

The PWM module is a flexible, programmable, PWM waveform generator that can be programmed to generate the required switching patterns for various applications related to motor and engine control or audio power control. The PWM generator can generate either center-aligned or edge-aligned PWM waveforms. In addition, it can generate complementary signals on two outputs in paired mode or independent signals in non-paired mode (applicable to a single group of four PWM waveforms).

The entire PWM module has four groups of four PWM outputs generating 16 PWM outputs in total. Each PWM group produces two pairs of PWM signals on the four PWM outputs.

The PWM generator is capable of operating in two distinct modes while generating center-aligned PWM waveforms: single update mode or double update mode. In single update mode the duty cycle values are programmable only once per PWM period. This results in PWM patterns that are symmetrical about the midpoint of the PWM period. In double update mode, a second updating of the PWM registers is implemented at the midpoint of the PWM period. In this mode, it is possible to produce asymmetrical PWM patterns that produce lower harmonic distortion in three-phase PWM inverters.

PWM signals can be mapped to the external port address lines or to the DPI pins.

Timers

The processors have a total of three timers: a core timer that can generate periodic software interrupts and two general-purpose timers that can generate periodic interrupts and be independently set to operate in one of three modes:

- Pulse waveform generation mode
- Pulse width count/capture mode
- External event watch dog mode

The core timer can be configured to use FLAG3 as a timer expired signal, and the general-purpose timers have one bidirectional pin and four registers that implement its mode of operation: a 6-bit configuration register, a 32-bit count register, a 32-bit period register, and a 32-bit pulse width register. A single control and status register enables or disables the general-purpose timer.

2-Wire Interface Port (TWI)

The TWI is a bidirectional 2-wire, serial bus used to move 8-bit data while maintaining compliance with the I^2C bus protocol. The TWI master incorporates the following features:

- 7-bit addressing
- Simultaneous master and slave operation on multiple device systems with support for multi master data arbitration
- Digital filtering and timed event processing
- 100 kbps and 400 kbps data rates
- Low interrupt rate

Shift Register

The shift register can be used as a serial to parallel data converter. The shift register module consists of an 18-stage serial shift register, 18-bit latch, and three-state output buffers. The shift register and latch have separate clocks. Data is shifted into the serial shift register on the positive-going transitions of the shift register serial clock (SR_SCLK) input. The data in each flip-flop is transferred to the respective latch on a positive-going transition of the shift register latch clock (SR_LAT) input.

The shift register's signals can be configured as follows.

- The SR_SCLK can come from any of the SPORT0–7 SCLK outputs, PCGA/B clock, any of the DAI pins (1–8), and one dedicated pin (SR_SCLK).
- The SR_LAT can come from any of SPORT0–7 Frame sync outputs, PCGA/B frame sync, any of the DAI pins (1–8), and one dedicated pin (SR_LAT).
- The SR_SDI input can from any of SPORT0–7 serial data outputs, any of the DAI pins (1–8), and one dedicated pin (SR_SDI).

Note that the SR_SCLK, SR_LAT, and SR_SDI inputs must come from same source except in the case of where SR_SCLK comes from PCGA/B or SR_SCLK and SR_LAT come from PCGA/B.

If SR_SCLK comes from PCGA/B, then SPORT0–7 generates the SR_LAT and SR_SDI signals. If SR_SCLK and SR_LAT come from PCGA/B, then SPORT0–7 generates the SR_SDI signal.

I/O PROCESSOR FEATURES

The I/O processor provides up to 65 channels of DMA as well as an extensive set of peripherals.

DMA Controller

The DMA controller operates independently and invisibly to the processor core, allowing DMA operations to occur while the core is simultaneously executing its program instructions. DMA transfers can occur between the processor's internal memory and its serial ports, the SPI-compatible (serial peripheral interface) ports, the IDP (input data port), the parallel data acquisition port (PDAP) or the UART.

Up to 65 channels of DMA are available on the processors as shown in Table 8.

Programs can be downloaded using DMA transfers. Other DMA features include interrupt generation upon completion of DMA transfers, and DMA chaining for automatic linked DMA transfers.

Table 8. DMA Channels

Peripheral	DMA Channels
SPORTs	16
PDAP	8
SPI	2
UART	2

Table 8. DMA Channels (Continued)

Peripheral	DMA Channels
External Port	2
Accelerators	2
Memory-to-Memory	2
MediaLB[1]	31

[1] Automotive models only.

Delay Line DMA

The processor provides delay line DMA functionality. This allows processor reads and writes to external delay line buffers (and therefore to external memory) with limited core interaction.

Scatter/Gather DMA

The processor provides scatter/gather DMA functionality. This allows processor DMA reads/writes to/from noncontiguous memory blocks.

FFT Accelerator

The FFT accelerator implements radix-2 complex/real input, complex output FFTs with no core intervention. The FFT accelerator runs at the peripheral clock frequency.

FIR Accelerator

The FIR (finite impulse response) accelerator consists of a 1024 word coefficient memory, a 1024 word deep delay line for the data, and four MAC units. A controller manages the accelerator. The FIR accelerator runs at the peripheral clock frequency.

IIR Accelerator

The IIR (infinite impulse response) accelerator consists of a 1440 word coefficient memory for storage of biquad coefficients, a data memory for storing the intermediate data and one MAC unit. A controller manages the accelerator. The IIR accelerator runs at the peripheral clock frequency.

Watch Dog Timer (WDT)

The processors include a 32-bit watch dog timer that can be used to implement a software watch dog function. A software watch dog can improve system reliability by forcing the processor to a known state through generation of a system reset if the timer expires before being reloaded by software. Software initializes the count value of the timer, and then enables the timer.

The WDT is used to supervise the stability of the system software. When used in this way, software reloads the WDT in a regular manner so that the downward counting timer never expires. An expiring timer then indicates that system software might be out of control.

The WDT resets both the core and the internal peripherals. Software must be able to determine if the watch dog was the source of the hardware reset by interrogating a status bit in the watch dog timer control register.

The watch dog timer also has an internal RC oscillator that can be used as the clock source. The internal RC oscillator can be used as an optional alternative to using an external clock applied to the WDT_CLIN pin.

Real-Time Clock

The real-time clock (RTC) provides a robust set of digital watch features, including current time, stopwatch, and alarm. The RTC is clocked by a 32.768 kHz crystal external to the SHARC processor. Connect RTC pins RTXI and RTXO with external components as shown in Figure 3.

The RTC peripheral has dedicated power supply pins so that it can remain powered up and clocked even when the rest of the processor is in a low power state. The RTC provides several programmable interrupt options, including interrupt per second, minute, hour, or day clock ticks, interrupt on programmable stopwatch countdown, or interrupt at a programmed alarm time. An RTCLKOUT signal that operates at 1 Hz is also provided for calibration.

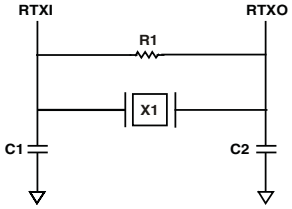

NOTE: C1 AND C2 ARE SPECIFIC TO CRYSTAL SPECIFIED FOR X1. CONTACT CRYSTAL MANUFACTURER FOR DETAILS. C1 AND C2 SPECIFICATIONS ASSUME BOARD TRACE CAPACITANCE OF 3 pF.

Figure 3. External Components for RTC

The 32.768 kHz input clock frequency is divided down to a 1 Hz signal by a prescaler. The counter function of the timer consists of four counters: a 60-second counter, a 60-minute counter, a 24-hour counter, and an 32,768-day counter. When the alarm interrupt is enabled, the alarm function generates an interrupt when the output of the timer matches the programmed value in the alarm control register. There are two alarms: The first alarm is for a time of day. The second alarm is for a day and time of that day.

The stopwatch function counts down from a programmed value, with one-second resolution. When the stopwatch interrupt is enabled and the counter underflows, an interrupt is generated.

SYSTEM DESIGN

The following sections provide an introduction to system design options and power supply issues.

Program Booting

The internal memory boots at system power-up from an 8-bit EPROM via the external port, an SPI master, or an SPI slave. Booting is determined by the boot configuration (BOOT_CFG2–0) pins in Table 9.

Table 9. Boot Mode Selection

BOOT_CFG2–0[1]	Booting Mode
000	SPI Slave Boot
001	SPI Master Boot (from Flash and Other Slaves)
010	AMI User Boot (for 8-bit Flash Boot)
011	No Boot (Processor Executes from Internal ROM After Reset)
100	Reserved
1xx	Reserved

[1] The BOOT_CFG2 pin is not available on the 100-lead package.

A running reset feature is used to reset the processor core and peripherals without resetting the PLL and SDRAM controller, or performing a boot. The functionality of the $\overline{\text{RESETOUT}}$ /$\overline{\text{RUNRSTIN}}$ pin has now been extended to also act as the input for initiating a running reset. For more information, see the *ADSP-214xx SHARC Processor Hardware Reference*.

Power Supplies

The processors have separate power supply connections for the internal (V_{DD_INT}) and external (V_{DD_EXT}), power supplies. The internal and analog supplies must meet the V_{DD_INT} specifications. The external supply must meet the V_{DD_EXT} specification. All external supply pins must be connected to the same power supply.

To reduce noise coupling, the PCB should use a parallel pair of power and ground planes for V_{DD_INT} and GND.

Target Board JTAG Emulator Connector

Analog Devices DSP Tools product line of JTAG emulators uses the IEEE 1149.1 JTAG test access port of the processors to monitor and control the target board processor during emulation. Analog Devices DSP Tools product line of JTAG emulators provides emulation at full processor speed, allowing inspection and modification of memory, registers, and processor stacks. The processor's JTAG interface ensures that the emulator will not affect target system loading or timing.

For complete information on Analog Devices' SHARC DSP Tools product line of JTAG emulator operation, see the appropriate emulator hardware user's guide.

DEVELOPMENT TOOLS

The processors are supported with a complete set of CROSSCORE® software and hardware development tools, including Analog Devices emulators and VisualDSP++® development environment. The same emulator hardware that supports other SHARC processors also fully emulates the processors.

EZ-KIT Lite Evaluation Board

For evaluation of the processors, use the EZ-KIT Lite® board being developed by Analog Devices. The board comes with on-chip emulation capabilities and is equipped to enable software development. Multiple daughter cards are available.

Designing an Emulator-Compatible DSP Board (Target)

The Analog Devices family of emulators are tools that every DSP developer needs to test and debug hardware and software systems. Analog Devices has supplied an IEEE 1149.1 JTAG Test Access Port (TAP) on each JTAG DSP. Nonintrusive in-circuit emulation is assured by the use of the processor's JTAG interface—the emulator does not affect target system loading or timing. The emulator uses the TAP to access the internal features of the processor, allowing the developer to load code, set breakpoints, observe variables, observe memory, and examine registers. The processor must be halted to send data and commands, but once an operation has been completed by the emulator, the DSP system is set running at full speed with no impact on system timing.

To use these emulators, the target board must include a header that connects the DSP's JTAG port to the emulator.

For details on target board design issues including mechanical layout, single processor connections, signal buffering, signal termination, and emulator pod logic, see the *EE-68: Analog Devices JTAG Emulation Technical Reference* on the Analog Devices website (www.analog.com)—use site search on "EE-68." This document is updated regularly to keep pace with improvements to emulator support.

Evaluation Kit

Analog Devices offers a range of EZ-KIT Lite evaluation platforms to use as a cost effective method to learn more about developing or prototyping applications with Analog Devices processors, platforms, and software tools. Each EZ-KIT Lite includes an evaluation board along with an evaluation suite of the VisualDSP++ development and debugging environment with the C/C++ compiler, assembler, and linker. Also included are sample application programs, power supply, and a USB cable. All evaluation versions of the software tools are limited for use only with the EZ-KIT Lite product.

The USB controller on the EZ-KIT Lite board connects the board to the USB port of the user's PC, enabling the VisualDSP++ evaluation suite to emulate the on-board processor in-circuit. This permits the customer to download, execute, and debug programs for the EZ-KIT Lite system. It also allows in-circuit programming of the on-board Flash device to store user-specific boot code, enabling the board to run as a stand-alone unit without being connected to the PC.

With a full version of VisualDSP++ installed (sold separately), engineers can develop software for the EZ-KIT Lite or any custom defined system. Connecting one of Analog Devices JTAG emulators to the EZ-KIT Lite board enables high speed, non-intrusive emulation.

ADDITIONAL INFORMATION

This data sheet provides a general overview of the ADSP-2147x architecture and functionality. For detailed information on the family core architecture and instruction set, refer to the *SHARC Processor Programming Reference*.

RELATED SIGNAL CHAINS

A *signal chain* is a series of signal conditioning electronic components that receive input (data acquired from sampling either real-time phenomena or from stored data) in tandem, with the output of one portion of the chain supplying input to the next. Signal chains are often used in signal processing applications to gather and process data or to apply system controls based on analysis of real-time phenomena. For more information about this term and related topics, see the "signal chain" entry in the Glossary of EE Terms on the Analog Devices website.

Analog Devices eases signal processing system development by providing signal processing components that are designed to work together well. A tool for viewing relationships between specific applications and related components is available on the www.analog.com website.

The Circuits from the Lab™ site (www.analog.com/signal chains) provides:

- Graphical circuit block diagram presentation of signal chains for a variety of circuit types and applications
- Drill down links for components in each chain to selection guides and application information
- Reference designs applying best practice design techniques

PIN FUNCTION DESCRIPTIONS

Table 10. Pin Descriptions

Name	Type	State During/ After Reset	Description
$ADDR_{23-0}$	I/O/T (ipu)	High-Z/Driven Low (Boot)	**External Address.** The processor outputs addresses for external memory and peripherals on these pins. The ADDR pins can be multiplexed to support the external memory interface address, FLAGS15–8 (I/O) and PWM (O). After reset, all ADDR pins are in EMIF mode, and FLAG(0–3) pins are in FLAGS mode (default). When configured in the IDP_PDAP_CTL register, IDP channel 0 scans the $ADDR_{23-4}$ pins for parallel input data.
$DATA_{15-0}$	I/O/T (ipu)	High-Z	**External Data.** The data pins can be multiplexed to support the external memory interface data (I/O) and $FLAGS_{7-0}$ (I/O).
AMI_ACK	I (ipu)		**Memory Acknowledge.** External devices can deassert AMI_ACK (low) to add wait states to an external memory access. AMI_ACK is used by I/O devices, memory controllers, or other peripherals to hold off completion of an external memory access.
$\overline{MS}_{0-1}$	O/T (ipu)	High-Z	**Memory Select Lines 0–1.** These lines are asserted (low) as chip selects for the corresponding banks of external memory. The $\overline{MS}_{1-0}$ lines are decoded memory address lines that change at the same time as the other address lines. When no external memory access is occurring the $\overline{MS}_{1-0}$ lines are inactive; they are active however when a conditional memory access instruction is executed, whether or not the condition is true. The $\overline{MS1}$ pin can be used in EPORT/FLASH boot mode. For more information on processor booting, see the *ADSP-214xx SHARC Processor Hardware Reference*.
$\overline{AMI_RD}$	O/T (ipu)	High-Z	**AMI Port Read Enable.** $\overline{AMI_RD}$ is asserted whenever the processor reads a word from external memory.
$\overline{AMI_WR}$	O/T (ipu)	High-Z	**AMI Port Write Enable.** $\overline{AMI_WR}$ is asserted when the processor writes a word to external memory.
FLAG0/$\overline{IRQ0}$	I/O (ipu)	FLAG[0] INPUT	**FLAG0/Interrupt Request0.**
FLAG1/$\overline{IRQ1}$	I/O (ipu)	FLAG[1] INPUT	**FLAG1/Interrupt Request1.**
FLAG2/$\overline{IRQ2}$/$\overline{MS2}$	I/O (ipu)	FLAG[2] INPUT	**FLAG2/Interrupt Request2/Memory Select2.** This pin is multiplexed with $\overline{MS2}$ in the 196-ball BGA package only.
FLAG3/TMREXP/$\overline{MS3}$	I/O (ipu)	FLAG[3] INPUT	**FLAG3/Timer Expired/Memory Select3.** This pin is multiplexed with $\overline{MS3}$ in the 196-ball BGA package only.

The following symbols appear in the Type column of Table 10: **A** = asynchronous, **I** = input, **O** = output, **S** = synchronous, **A/D** = active drive, **O/D** = open drain, and **T** = three-state, **ipd** = internal pull-down resistor, **ipu** = internal pull-up resistor.

The internal pull-up (ipu) and internal pull-down (ipd) resistors are designed to hold the internal path from the pins at the expected logic levels. To pull-up or pull-down the external pads to the expected logic levels, use external resistors. Internal pull-up/pull-down resistors cannot be enabled/disabled and the value of these resistors cannot be programmed. The range of an ipu resistor can be 26 kΩ to 63 kΩ. The range of an ipd resistor can be 31 kΩ to 85 kΩ. The three-state voltage of ipu pads will not reach to full the VDD_EXT level; at typical conditions the voltage is in the range of 2.3 V to 2.7 V.

In this table, all pins are LVTTL compliant with the exception of the thermal diode, shift register, and real-time clock (RTC) pins.

Not all pins are available in the 100-lead LQFP package. For more information, see Table 2 on Page 3 and Table 59 on Page 64.

Table 10. Pin Descriptions (Continued)

Name	Type	State During/ After Reset	Description
$\overline{\text{SDRAS}}$	O/T (ipu)	High-Z/ Driven High	**SDRAM Row Address Strobe.** Connect to SDRAM's RAS pin. In conjunction with other SDRAM command pins, defines the operation for the SDRAM to perform.
$\overline{\text{SDCAS}}$	O/T (ipu)	High-Z/ Driven High	**SDRAM Column Address Select.** Connect to SDRAM's CAS pin. In conjunction with other SDRAM command pins, defines the operation for the SDRAM to perform.
$\overline{\text{SDWE}}$	O/T (ipu)	High-Z/ Driven High	**SDRAM Write Enable.** Connect to SDRAM's WE or W buffer pin.
SDCKE	O/T (ipu)	High-Z/ Driven High	**SDRAM Clock Enable.** Connect to SDRAM's CKE pin. Enables and disables the CLK signal. For details, see the data sheet supplied with the SDRAM device.
SDA10	O/T (ipu)	High-Z/ Driven High	**SDRAM A10 Pin.** Enables applications to refresh an SDRAM in parallel with non-SDRAM accesses. This pin replaces the DSP's ADDR10 pin only during SDRAM accesses.
SDDQM	O/T (ipu)	High-Z/ Driven High	**DQM Data Mask.** SDRAM input mask signal for write accesses and output enable signal for read accesses. Input data is masked when DQM is sampled high during a write cycle. The SDRAM output buffers are placed in a High-Z state when DQM is sampled high during a read cycle. SDDQM is driven high from reset de-assertion until SDRAM initialization completes. Afterwards, it is driven low irrespective of whether any SDRAM accesses occur or not.
SDCLK	O/T (ipd)	High-Z/ Driving	**SDRAM Clock Output.** Clock driver for this pin differs from all other clock drivers. See Figure 47 on Page 61. For models in the 100-lead package, the SDRAM interface should be disabled to avoid unnecessary power switching by setting the DSDCTL bit in SDCTL register. For more information, see the *ADSP-214xx SHARC Processor Hardware Reference*.
DAI _P_{20-1}	I/O/T (ipu)	High-Z	**Digital Applications Interface**. These pins provide the physical interface to the DAI SRU. The DAI SRU configuration registers define the combination of on-chip audiocentric peripheral inputs or outputs connected to the pin and to the pin's output enable. The configuration registers of these peripherals then determines the exact behavior of the pin. Any input or output signal present in the DAI SRU may be routed to any of these pins.
DPI _P_{14-1}	I/O/T (ipu)	High-Z	**Digital Peripheral Interface.** These pins provide the physical interface to the DPI SRU. The DPI SRU configuration registers define the combination of on-chip peripheral inputs or outputs connected to the pin and to the pin's output enable. The configuration registers of these peripherals then determine the exact behavior of the pin. Any input or output signal present in the DPI SRU may be routed to any of these pins.
WDT_CLKIN	I		**Watch Dog Timer Clock Input.** This pin should be pulled low when not used.
WDT_CLKO	O		**Watch Dog Resonator Pad Output.**
$\overline{\text{WDTRSTO}}$	O (ipu)		**Watch Dog Timer Reset Out.**
THD_P	I		**Thermal Diode Anode.** When not used, this pin can be left floating.
THD_M	O		**Thermal Diode Cathode.** When not used, this pin can be left floating.

The following symbols appear in the Type column of Table 10: **A** = asynchronous, **I** = input, **O** = output, **S** = synchronous, **A/D** = active drive, **O/D** = open drain, and **T** = three-state, **ipd** = internal pull-down resistor, **ipu** = internal pull-up resistor.

The internal pull-up (ipu) and internal pull-down (ipd) resistors are designed to hold the internal path from the pins at the expected logic levels. To pull-up or pull-down the external pads to the expected logic levels, use external resistors. Internal pull-up/pull-down resistors cannot be enabled/disabled and the value of these resistors cannot be programmed. The range of an ipu resistor can be 26 kΩ to 63 kΩ. The range of an ipd resistor can be 31 kΩ to 85 kΩ. The three-state voltage of ipu pads will not reach to full the VDD_EXT level; at typical conditions the voltage is in the range of 2.3 V to 2.7 V.

In this table, all pins are LVTTL compliant with the exception of the thermal diode, shift register, and real-time clock (RTC) pins.

Not all pins are available in the 100-lead LQFP package. For more information, see Table 2 on Page 3 and Table 59 on Page 64.

Table 10. Pin Descriptions (Continued)

Name	Type	State During/ After Reset	Description
MLBCLK	I		**Media Local Bus Clock.** This clock is generated by the MLB controller that is synchronized to the MOST network and provides the timing for the entire MLB interface at 49.152 MHz at FS = 48 kHz. When the MLB controller is not used, this pin should be grounded.
MLBDAT	I/O/T in 3 pin mode. I in 5 pin mode.	High-Z	**Media Local Bus Data.** The MLBDAT line is driven by the transmitting MLB device and is received by all other MLB devices including the MLB controller. The MLBDAT line carries the actual data. In 5-pin MLB mode, this pin is an input only. When the MLB controller is not used, this pin should be grounded.
MLBSIG	I/O/T in 3 pin mode. I in 5 pin mode	High-Z	**Media Local Bus Signal.** This is a multiplexed signal which carries the Channel/Address generated by the MLB Controller, as well as the Command and RxStatus bytes from MLB devices. In 5-pin mode, this pin is input only. When the MLB controller is not used, this pin should be grounded.
MLBDO	O/T	High-Z	**Media Local Bus Data Output (in 5 Pin Mode).** This pin is used only in 5-pin MLB mode and serves as the output data pin. When the MLB controller is not used, this pin should be grounded.
MLBSO	O/T	High-Z	**Media Local Bus Signal Output (in 5 Pin Mode).** This pin is used only in 5-pin MLB mode and serves as the output signal pin. When the MLB controller is not used, this pin should be grounded.
SR_SCLK	I (ipu)		**Shift Register Serial Clock.** (Active high, rising edge sensitive)
$\overline{\text{SR_CLR}}$	I (ipu)		**Shift Register Reset.** (Active low)
SR_SDI	I (ipu)		**Shift Register Serial Data Input.**
SR_SDO	O (ipu)	Driven Low	**Shift Register Serial Data Output.**
SR_LAT	I (ipu)		**Shift Register Latch Clock Input.** (Active high, rising edge sensitive)
SR_LDO_{17-0}	O/T (ipu)	High-Z	**Shift Register Parallel Data Output.**
RTXI	I		**RTC Crystal Input.** If RTC is not used, then the bits RTCPDN and RTC_READENB of RTC_INIT register must be set to 1.
RTXO	O		**RTC Crystal Output.**
RTCLKOUT	O (ipd)		**RTC Clock Output.** For calibration purposes. The clock runs at 1 Hz.
TDI	I (ipu)		**Test Data Input (JTAG).** Provides serial data for the boundary scan logic.
TDO	O/T	High-Z	**Test Data Output (JTAG).** Serial scan output of the boundary scan path.
TMS	I (ipu)		**Test Mode Select (JTAG).** Used to control the test state machine.
TCK	I		**Test Clock (JTAG).** Provides a clock for JTAG boundary scan. TCK must be asserted (pulsed low) after power-up or held low for proper operation of the device.
$\overline{\text{TRST}}$	I (ipu)		**Test Reset (JTAG).** Resets the test state machine. $\overline{\text{TRST}}$ must be asserted (pulsed low) after power-up or held low for proper operation of the processor.
$\overline{\text{EMU}}$	O/D (ipu)	High-Z	**Emulation Status.** Must be connected to the Analog Devices DSP Tools product line of JTAG emulators target board connector only.

The following symbols appear in the Type column of Table 10: **A** = asynchronous, **I** = input, **O** = output, **S** = synchronous, **A/D** = active drive, **O/D** = open drain, and **T** = three-state, **ipd** = internal pull-down resistor, **ipu** = internal pull-up resistor.

The internal pull-up (ipu) and internal pull-down (ipd) resistors are designed to hold the internal path from the pins at the expected logic levels. To pull-up or pull-down the external pads to the expected logic levels, use external resistors. Internal pull-up/pull-down resistors cannot be enabled/disabled and the value of these resistors cannot be programmed. The range of an ipu resistor can be 26 kΩ to 63 kΩ. The range of an ipd resistor can be 31 kΩ to 85 kΩ. The three-state voltage of ipu pads will not reach to full the VDD_EXT level; at typical conditions the voltage is in the range of 2.3 V to 2.7 V.

In this table, all pins are LVTTL compliant with the exception of the thermal diode, shift register, and real-time clock (RTC) pins.

Not all pins are available in the 100-lead LQFP package. For more information, see Table 2 on Page 3 and Table 59 on Page 64.

Table 10. Pin Descriptions (Continued)

Name	Type	State During/ After Reset	Description
CLK_CFG_{1-0}	I		**Core to CLKIN Ratio Control.** These pins set the start up clock frequency. Note that the operating frequency can be changed by programming the PLL multiplier and divider in the PMCTL register at any time after the core comes out of reset. The allowed values are: 00 = 8:1 01 = 32:1 10 = 16:1 11 = reserved
CLKIN	I		**Local Clock In.** Used in conjunction with XTAL. CLKIN is the clock input. It configures the processors to use either its internal clock generator or an external clock source. Connecting the necessary components to CLKIN and XTAL enables the internal clock generator. Connecting the external clock to CLKIN while leaving XTAL unconnected configures the processors to use the external clock source such as an external clock oscillator. CLKIN may not be halted, changed, or operated below the specified frequency.
XTAL	O		**Crystal Oscillator Terminal.** Used in conjunction with CLKIN to drive an external crystal.
$\overline{RESET}$	I		**Processor Reset.** Resets the processor to a known state. Upon deassertion, there is a 4096 CLKIN cycle latency for the PLL to lock. After this time, the core begins program execution from the hardware reset vector address. The $\overline{RESET}$ input must be asserted (low) at power-up.
$\overline{RESETOUT}$/$\overline{RUNRSTIN}$	I/O (ipu)		**Reset Out/Running Reset In.** The default setting on this pin is reset out. This pin also has a second function as RUNRSTIN which is enabled by setting bit 0 of the RUNRSTCTL register. For more information, see the *ADSP-214xx SHARC Processor Hardware Reference*.
$BOOT_CFG_{2-0}$	I		**Boot Configuration Select.** These pins select the boot mode for the processor. The BOOT_CFG pins must be valid before $\overline{RESET}$ (hardware and software) is de-asserted. Note that the BOOT_CFG2 pin is not available on the 100-lead LQFP package.

The following symbols appear in the Type column of Table 10: **A** = asynchronous, **I** = input, **O** = output, **S** = synchronous, **A/D** = active drive, **O/D** = open drain, and **T** = three-state, **ipd** = internal pull-down resistor, **ipu** = internal pull-up resistor.

The internal pull-up (ipu) and internal pull-down (ipd) resistors are designed to hold the internal path from the pins at the expected logic levels. To pull-up or pull-down the external pads to the expected logic levels, use external resistors. Internal pull-up/pull-down resistors cannot be enabled/disabled and the value of these resistors cannot be programmed. The range of an ipu resistor can be 26 kΩ to 63 kΩ. The range of an ipd resistor can be 31 kΩ to 85 kΩ. The three-state voltage of ipu pads will not reach to full the VDD_EXT level; at typical conditions the voltage is in the range of 2.3 V to 2.7 V.

In this table, all pins are LVTTL compliant with the exception of the thermal diode, shift register, and real-time clock (RTC) pins.

Not all pins are available in the 100-lead LQFP package. For more information, see Table 2 on Page 3 and Table 59 on Page 64.

Table 11. Pin List, Power and Ground

Name	Type	Description
V_{DD_INT}	P	**Internal Power Supply.**
V_{DD_EXT}	P	**I/O Power Supply.**
V_{DD_RTC}	P	**Real-Time Clock Power Supply.**
GND[1]	G	**Ground.**
V_{DD_THD}	P	**Thermal Diode Power Supply**. When not used, this pin can be left floating.

[1] The exposed pad is required to be electrically and thermally connected to GND. Implement this by soldering the exposed pad to a GND PCB land that is the same size as the exposed pad. The GND PCB land should be *robustly* connected to the GND plane in the PCB for best electrical and thermal performance. No separate GND pins are provided in the package. See also 100-LQFP_EP Lead Assignment on Page 64.

SPECIFICATIONS

OPERATING CONDITIONS

Parameter[1]	Description	100 MHz Min	100 MHz Nom	100 MHz Max	266 MHz Min	266 MHz Nom	266 MHz Max	300 MHz Min	300 MHz Nom	300 MHz Max	Unit
V_{DD_INT}	Internal (Core) Supply Voltage	1.05	1.1	1.15	1.14	1.2	1.26	1.25	1.3	1.35	V
V_{DD_EXT}	External (I/O) Supply Voltage	3.13	3.3	3.47	3.13	3.3	3.47	3.13	3.3	3.47	V
V_{DD_THD}	Thermal Diode Supply Voltage	3.13	3.3	3.47	3.13	3.3	3.47	3.13	3.3	3.47	V
V_{DD_RTC}	Real-Time Clock Power Supply Voltage	2.0	3.0	3.6	2.0	3.0	3.6	2.0	3.0	3.6	V
V_{IH}[2]	High Level Input Voltage @ V_{DD_EXT} = Max	2.0			2.0			2.0			V
V_{IL}[3]	Low Level Input Voltage @ V_{DD_EXT} = Min			0.8			0.8			0.8	V
V_{IH_CLKIN}[3]	High Level Input Voltage @ V_{DD_EXT} = Max	2.2		V_{DDEXT}	2.2		V_{DDEXT}	2.2		V_{DDEXT}	V
V_{IL_CLKIN}	Low Level Input Voltage @ V_{DD_EXT} = Max	–0.3		0.8	–0.3		0.8	–0.3		0.8	V
T_J	Junction Temperature 100-Lead LQFP_EP @ $T_{AMBIENT}$ 0°C to +70°C	N/A		N/A	0		105	N/A		N/A	°C
T_J[4]	Junction Temperature 100-Lead LQFP_EP @ $T_{AMBIENT}$ –40°C to +85°C	N/A		N/A	–40		+125	N/A		N/A	°C
T_J[4]	Junction Temperature 100-Lead LQFP_EP @ $T_{AMBIENT}$ –40°C to +105°C	N/A		N/A	–40		+125	N/A		N/A	°C
T_J	Junction Temperature 196-Ball CSP_BGA @ $T_{AMBIENT}$ 0°C to +70°C	0		105	0		105	0		100	°C
T_J	Junction Temperature 196-Ball CSP_BGA @ $T_{AMBIENT}$ –40°C to +85°C	N/A		N/A	–40		125	N/A		N/A	°C

[1] Specifications subject to change without notice.

[2] Applies to input and bidirectional pins: ADDR23–0, DATA15–0, FLAG3–0, DAI_Px, DPI_Px, BOOT_CFGx, CLK_CFGx, $\overline{\text{RUNRSTIN}}$, $\overline{\text{RESET}}$, TCK, TMS, TDI, $\overline{\text{TRST}}$, SDA10, AMI_ACK, MLBCLK, MLBDAT, MLBSIG.

[3] Applies to input pin CLKIN, WDT_CLKIN.

[4] Applies to automotive models only. See Automotive Products on Page 68

ELECTRICAL CHARACTERISTICS

Parameter[1]	Description	Test Conditions	100 MHz Min	100 MHz Max	266 MHz Min	266 MHz Max	300 MHz Min	300 MHz Max	Unit
V_{OH}[2]	High Level Output Voltage	@ V_{DD_EXT} = Min, I_{OH} = –1.0 mA[3]	2.4		2.4		2.4		V
V_{OL}[2]	Low Level Output Voltage	@ V_{DD_EXT} = Min, I_{OL} = 1.0 mA[3]		0.4		0.4		0.4	V
I_{IH}[4, 5]	High Level Input Current	@ V_{DD_EXT} = Max, V_{IN} = V_{DD_EXT} Max		10		10		10	µA
I_{IL}[4]	Low Level Input Current	@ V_{DD_EXT} = Max, V_{IN} = 0 V		–10		–10		–10	µA
I_{ILPU}[5]	Low Level Input Current Pull-up	@ V_{DD_EXT} = Max, V_{IN} = 0 V		200		200		200	µA
I_{OZH}[6, 7]	Three-State Leakage Current	@ V_{DD_EXT} = Max, V_{IN} = V_{DD_EXT} Max		10		10		10	µA
I_{OZL}[6]	Three-State Leakage Current	@ V_{DD_EXT} = Max, V_{IN} = 0 V		–10		–10		–10	µA
I_{OZLPU}[7]	Three-State Leakage Current Pull-up	@ V_{DD_EXT} = Max, V_{IN} = 0 V		200		200		200	µA
I_{OZHPD}[8]	Three-State Leakage Current Pull-down	@ V_{DD_EXT} = Max, V_{IN} = V_{DD_EXT} Max		200		200		200	µA
I_{DD_RTC}	V_{DD_RTC} Current	@ V_{DD_RTC} = 3.0, T_J = 25°C		0.76		0.76		0.76	µA
$I_{DD\text{-}INTYP}$[9]	Supply Current (Internal)	f_{CCLK} > 0 MHz		Table 13 + Table 14 × ASF		Table 13 + Table 14 × ASF		Table 13 + Table 14 × ASF	mA
C_{IN}[10, 11]	Input Capacitance	T_{CASE} = 25°C		5		5		5	pF

[1] Specifications subject to change without notice.
[2] Applies to output and bidirectional pins: ADDR23-0, DATA15-0, $\overline{\text{AMI_RD}}$, $\overline{\text{AMI_WR}}$, FLAG3–0, DAI_Px, DPI_Px, $\overline{\text{EMU}}$, TDO, $\overline{\text{RESETOUT}}$,MLBSIG, MLBDAT, MLBDO, MLBSO, $\overline{\text{SDRAS}}$, $\overline{\text{SDCAS}}$, $\overline{\text{SDWE}}$, SDCKE, SDA10, SDDQM, MS0-1.
[3] See Output Drive Currents on Page 61 for typical drive current capabilities.
[4] Applies to input pins: BOOT_CFGx, CLK_CFGx, TCK, $\overline{\text{RESET}}$, CLKIN.
[5] Applies to input pins with internal pull-ups: $\overline{\text{TRST}}$, TMS, TDI.
[6] Applies to three-statable pins: TDO, MLBDAT, MLBSIG, MLBDO, and MLBSO.
[7] Applies to three-statable pins with pull-ups: DAI_Px, DPI_Px, $\overline{\text{EMU}}$.
[8] Applies to three-statable pin with pull-down: SDCLK.
[9] See Engineer-to-Engineer Note "Estimating Power Dissipation for ADSP-2147x SHARC Processors" for further information.
[10] Applies to all signal pins.
[11] Guaranteed, but not tested.

Total Power Dissipation

Total power dissipation has two components:

1. Internal power consumption
2. External power consumption

Internal power consumption also comprises two components:

1. Static, due to leakage current. Table 13 shows the static current consumption ($I_{DD\text{-}STATIC}$) as a function of junction temperature (T_J) and core voltage (V_{DD_INT}).
2. Dynamic ($I_{DD\text{-}DYNAMC}$), due to transistor switching characteristics and activity level of the processor. The activity level is reflected by the Activity Scaling Factor (ASF), which represents application code running on the processor core and having various levels of peripheral and external port activity (Table 12). Dynamic current consumption is calculated by scaling the specific application by the ASF and using baseline dynamic current consumption as a reference. The ASF is combined with the CCLK frequency and V_{DD_INT} dependent data in Table 14 to calculate this part.

External power consumption is due to the switching activity of the external pins.

Table 12. Activity Scaling Factors (ASF)[1]

Activity	Scaling Factor (ASF)
Idle	0.31
Low	0.53
Medium Low	0.62
Medium High	0.78
Peak-Typical (50:50)[2]	0.85
Peak-Typical (60:40)[2]	0.93
Peak-Typical (70:30)[2]	1.00
High Typical	1.18
High	1.28
Peak	1.34

[1] See *Estimating Power for ADSP-214xx SHARC Processors (EE-348)* for more information on the explanation of the power vectors specific to the ASF table.

[2] Ratio of continuous instruction loop (core) to SDRAM control code reads and writes.

Table 13. Static Current—$I_{DD\text{-}STATIC}$ (mA)[1]

	V_{DD_INT} (V)						
T_J (°C)	1.05 V	1.10 V	1.15 V	1.20 V	1.25 V	1.30 V	1.35 V
–45	< 0.1	< 0.1	0.4	0.8	1.3	2.1	3.3
–35	< 0.1	< 0.1	0.4	0.7	1.1	1.7	2.9
–25	< 0.1	0.2	0.4	0.8	1.2	1.7	2.9
–15	< 0.1	0.4	0.6	1.0	1.4	1.9	3.2
–5	0.2	0.6	0.9	1.3	1.8	2.3	3.7
+5	0.5	0.9	1.3	1.8	2.3	3.0	4.4
+15	0.8	1.4	1.8	2.3	3.0	3.7	5.1
+25	1.3	1.9	2.5	3.1	3.9	4.7	6.2
+35	2.0	2.8	3.4	4.2	5.1	6.0	8.0
+45	3.0	3.9	4.7	5.7	6.7	7.8	10.1
+55	4.3	5.4	6.3	7.6	8.8	10.3	12.9
+65	6.0	7.3	8.6	10.1	11.7	13.5	16.4
+75	8.3	9.9	11.5	13.3	15.3	17.4	21.2
+85	11.2	13.2	15.3	17.5	19.9	22.6	27.1
+95	15.2	17.6	20.1	22.9	26.1	29.4	34.6
+100	17.4	20.2	22.9	25.9	29.4	33.0	39.2
+105	20.0	23.0	26.1	29.5	33.4	N/A	N/A
+115	26.3	30.0	33.9	38.2	42.9	N/A	N/A
+125	34.4	38.9	43.6	48.8	54.8	N/A	N/A

[1] Valid temperature and voltage ranges are model-specific. See Operating Conditions on Page 19.

Table 14. Baseline Dynamic Current in CCLK Domain (mA, with ASF = 1.0)[1, 2]

	Voltage (V_{DD_INT})						
f_{CCLK} (MHz)	1.05 V	1.10 V	1.15 V	1.20 V	1.25 V	1.30 V	1.35 V
100	75	78	82	86	90	95	98
150	111	117	122	128	134	141	146
200	N/A	N/A	162	170	178	186	194
266	N/A	N/A	215	225	234	246	256
300	N/A	N/A	N/A	N/A	264	279	291

[1] The values are not guaranteed as standalone maximum specifications. They must be combined with static current per the equations of Electrical Characteristics on Page 20.
[2] Valid frequency and voltage ranges are model-specific. See Operating Conditions on Page 19.

PACKAGE INFORMATION

The information presented in Figure 4 provides details about the package branding. For a complete listing of product availability, see Ordering Guide on Page 69.

Figure 4. Typical Package Brand

Table 15. Package Brand Information[1]

Brand Key	Field Description
t	Temperature Range
pp	Package Type
Z	RoHS Compliant Option
cc	See Ordering Guide
vvvvvv.x	Assembly Lot Code
n.n	Silicon Revision
#	RoHS Compliant Designation
yyww	Date Code

[1] Non-automotive only. For branding information specific to automotive products, contact Analog Devices Inc.

ESD SENSITIVITY

ESD (electrostatic discharge) sensitive device. Charged devices and circuit boards can discharge without detection. Although this product features patented or proprietary protection circuitry, damage may occur on devices subjected to high energy ESD. Therefore, proper ESD precautions should be taken to avoid performance degradation or loss of functionality.

MAXIMUM POWER DISSIPATION

See Engineer-to-Engineer Note "Estimating Power Dissipation for ADSP-2147x SHARC Processors" for detailed thermal and power information regarding maximum power dissipation. For information on package thermal specifications, see Thermal Characteristics on Page 62.

ABSOLUTE MAXIMUM RATINGS

Stresses greater than those listed in Table 16 may cause permanent damage to the device. These are stress ratings only; functional operation of the device at these or any other conditions greater than those indicated in Operating Conditions on Page 19 is not implied. Exposure to absolute maximum rating conditions for extended periods may affect device reliability.

Table 16. Absolute Maximum Ratings

Parameter	Rating
Internal (Core) Supply Voltage (V_{DD_INT})	–0.3 V to +1.35 V
External (I/O) Supply Voltage (V_{DD_EXT})	–0.3 V to +4.6 V
Real Time Clock Voltage (V_{DD_RTC})	–0.3 V to +4.6 V
Thermal Diode Supply Voltage (V_{DD_THD})	–0.3 V to +4.6 V
Input Voltage	–0.5 V to +3.8 V
Output Voltage Swing	–0.5 V to V_{DD_EXT} +0.5 V
Storage Temperature Range	–65°C to +150°C
Junction Temperature While Biased	125°C

TIMING SPECIFICATIONS

Use the exact timing information given. Do not attempt to derive parameters from the addition or subtraction of others. While addition or subtraction would yield meaningful results for an individual device, the values given in this data sheet reflect statistical variations and worst cases. Consequently, it is not meaningful to add parameters to derive longer times. See Figure 49 on Page 61 under Test Conditions for voltage reference levels.

Switching Characteristics specify how the processor changes its signals. Circuitry external to the processor must be designed for compatibility with these signal characteristics. Switching characteristics describe what the processor will do in a given circumstance. Use switching characteristics to ensure that any timing requirement of a device connected to the processor (such as memory) is satisfied.

Timing Requirements apply to signals that are controlled by circuitry external to the processor, such as the data input for a read operation. Timing requirements guarantee that the processor operates correctly with other devices.

Core Clock Requirements

The processor's internal clock (a multiple of CLKIN) provides the clock signal for timing internal memory, processor core, and serial ports. During reset, program the ratio between the processor's internal clock frequency and external (CLKIN) clock frequency with the CLK_CFG1–0 pins.

The processor's internal clock switches at higher frequencies than the system input clock (CLKIN). To generate the internal clock, the processor uses an internal phase-locked loop (PLL, see Figure 5). This PLL-based clocking minimizes the skew between the system clock (CLKIN) signal and the processor's internal clock.

Voltage Controlled Oscillator (VCO)

In application designs, the PLL multiplier value should be selected in such a way that the VCO frequency never exceeds f_{VCO} specified in Table 19.

- The product of CLKIN and PLLM must never exceed 1/2 of f_{VCO} (max) in Table 19 if the input divider is not enabled (INDIV = 0).
- The product of CLKIN and PLLM must never exceed f_{VCO} (max) in Table 19 if the input divider is enabled (INDIV = 1).

The VCO frequency is calculated as follows:

$$f_{VCO} = 2 \times PLLM \times f_{INPUT}$$
$$f_{CCLK} = (2 \times PLLM \times f_{INPUT}) \div PLLD$$

where:

f_{VCO} = VCO output

PLLM = Multiplier value programmed in the PMCTL register. During reset, the PLLM value is derived from the ratio selected using the CLK_CFG pins in hardware.

PLLD = 2, 4, 8, or 16 based on the divider value programmed on the PMCTL register. During reset this value is 2.

f_{INPUT} is the input frequency to the PLL.

f_{INPUT} = CLKIN when the input divider is disabled, or CLKIN ÷ 2 when the input divider is enabled.

Note the definitions of the clock periods that are a function of CLKIN and the appropriate ratio control shown in Table 17. All of the timing specifications for the peripherals are defined in relation to t_{PCLK}. See the peripheral specific section for each peripheral's timing information.

Table 17. Clock Periods

Timing Requirements	Description
t_{CK}	CLKIN Clock Period
t_{CCLK}	Processor Core Clock Period
t_{PCLK}	Peripheral Clock Period = 2 × t_{CCLK}
t_{SDCLK}	SDRAM Clock Period = (t_{CCLK}) × SDCKR

Figure 5 shows core to CLKIN relationships with an external oscillator or crystal. The shaded divider/multiplier blocks denote where clock ratios can be set through hardware or software using the power management control register (PMCTL). For more information, see the *ADSP-214xx SHARC Processor Hardware Reference*.

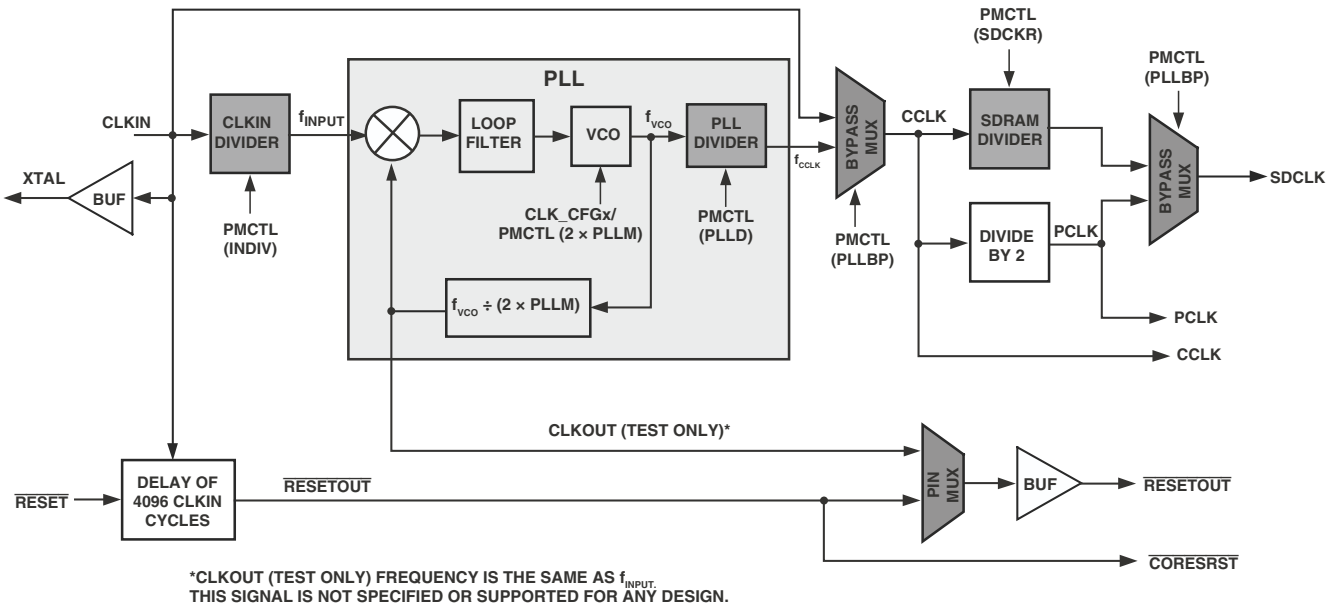

Figure 5. Core Clock and System Clock Relationship to CLKIN

Power-Up Sequencing

The timing requirements for processor startup are given in Table 18. While no specific power-up sequencing is required between V_{DD_EXT} and V_{DD_INT}, there are some considerations that the system designs should take into account.

- No power supply should be powered up for an extended period of time (>200 ms) before another supply starts to ramp up.
- If the V_{DD_INT} power supply comes up after V_{DD_EXT}, any pin, such as $\overline{\text{RESETOUT}}$ and $\overline{\text{RESET}}$, may actually drive momentarily until the V_{DD_INT} rail has powered up. Systems sharing these signals on the board must determine if there are any issues that need to be addressed based on this behavior.

Note that during power-up, when the V_{DD_INT} power supply comes up after V_{DD_EXT}, a leakage current of the order of three-state leakage current pull-up, pull-down, may be observed on any pin, even if that is an input only (for example, the $\overline{\text{RESET}}$ pin), until the V_{DD_INT} rail has powered up.

Table 18. Power-Up Sequencing Timing Requirements (Processor Startup)

Parameter		Min	Max	Unit
Timing Requirements				
t_{RSTVDD}	$\overline{\text{RESET}}$ Low Before V_{DD_EXT} or V_{DD_INT} On	0		ms
$t_{IVDDEVDD}$	V_{DD_INT} On Before V_{DD_EXT}	–200	+200	ms
t_{CLKVDD}[1]	CLKIN Valid After V_{DD_INT} and V_{DD_EXT} Valid	0	200	ms
t_{CLKRST}	CLKIN Valid Before $\overline{\text{RESET}}$ Deasserted	10[2]		ms
t_{PLLRST}	PLL Control Setup Before $\overline{\text{RESET}}$ Deasserted	20[3]		ms
Switching Characteristic				
$t_{CORERST}$	Core Reset Deasserted After $\overline{\text{RESET}}$ Deasserted	$4096 \times t_{CK} + 2 \times t_{CCLK}$ [4, 5]		ms

[1] Valid V_{DD_INT} and V_{DD_EXT} assumes that the supplies are fully ramped to their nominal values (it does not matter which supply comes up first). Voltage ramp rates can vary from microseconds to hundreds of milliseconds depending on the design of the power supply subsystem.

[2] Assumes a stable CLKIN signal, after meeting worst-case startup timing of crystal oscillators. Refer to your crystal oscillator manufacturer's data sheet for startup time. Assume a 25 ms maximum oscillator startup time if using the XTAL pin and internal oscillator circuit in conjunction with an external crystal.

[3] Based on CLKIN cycles.

[4] Applies after the power-up sequence is complete. Subsequent resets require a minimum of four CLKIN cycles for $\overline{\text{RESET}}$ to be held low in order to properly initialize and propagate default states at all I/O pins.

[5] The 4096 cycle count depends on t_{SRST} specification in Table 20. If setup time is not met, one additional CLKIN cycle may be added to the core reset time, resulting in 4097 cycles maximum.

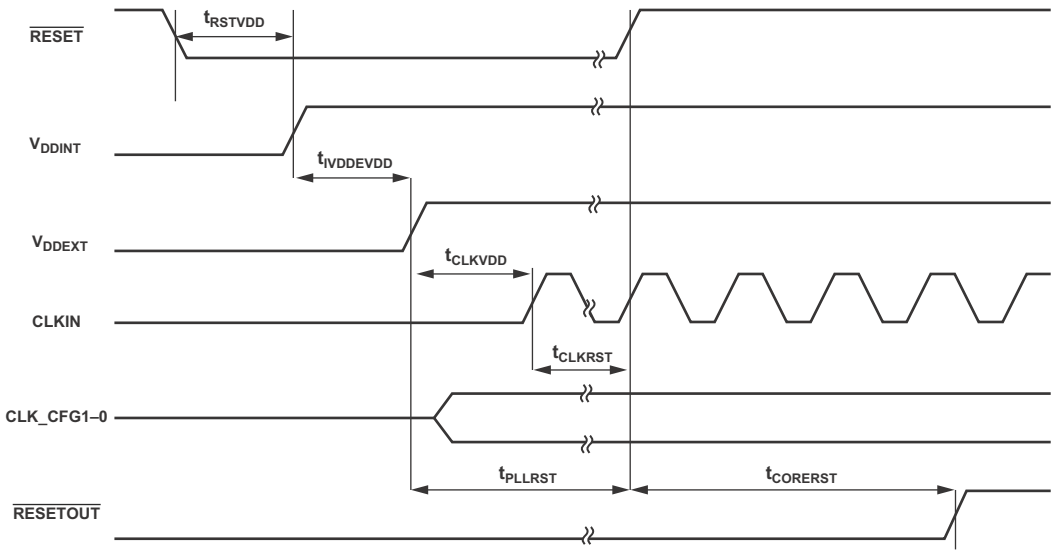

Figure 6. Power-Up Sequencing

Clock Input

Table 19. Clock Input

Parameter		100 MHz Min	100 MHz Max	266 MHz Min	266 MHz Max	300 MHz Min	300 MHz Max	Unit
Timing Requirements								
t_{CK}	CLKIN Period	76[1]	100	30[1]	100	26.66[1]	100	ns
t_{CKL}	CLKIN Width Low	38	45	15	45	13.33	45	ns
t_{CKH}	CLKIN Width High	38	45	15	45	13.33	45	ns
t_{CKRF}	CLKIN Rise/Fall (0.4 V to 2.0 V)		3		3		3	ns
t_{CCLK}[2]	CCLK Period	9.5	10.2	3.75	10	3.33	10	ns
f_{VCO}[3]	VCO Frequency	196	210	200	600	200	600	MHz
t_{CKJ}[4, 5]	CLKIN Jitter Tolerance	–250	+250	–250	+250	–250	+250	ps

[1] Applies only for CLKCFG1–0 = 00 and default values for PLL control bits in PMCTL.
[2] Any changes to PLL control bits in the PMCTL register must meet core clock timing specification t_{cclk}.
[3] See Figure 5 on Page 24 for VCO diagram.
[4] Actual input jitter should be combined with ac specifications for accurate timing analysis.
[5] Jitter specification is maximum peak-to-peak time interval error (TIE) jitter.

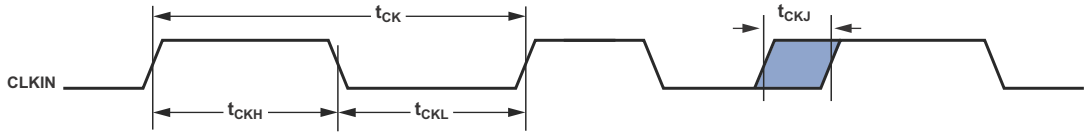

Figure 7. Clock Input

Clock Signals

The processors can use an external clock or a crystal. See the CLKIN pin description in Table 10. Programs can configure the processor to use its internal clock generator by connecting the necessary components to CLKIN and XTAL. Figure 8 shows the component connections used for a crystal operating in fundamental mode. Note that the clock rate is achieved using a 16.67 MHz crystal and a PLL multiplier ratio 16:1 (CCLK:CLKIN achieves a clock speed of 266 MHz). To achieve the full core clock rate, programs need to configure the multiplier bits in the PMCTL register.

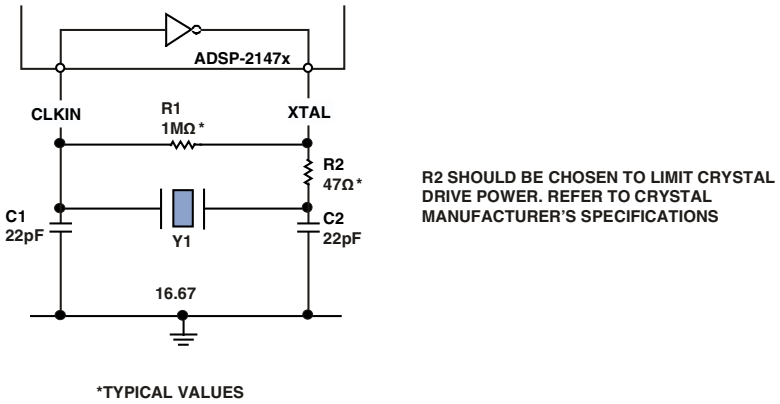

Figure 8. 266 MHz Operation (Fundamental Mode Crystal)

Reset

Table 20. Reset

Parameter		Min	Max	Unit
Timing Requirements				
t_{WRST}[1]	$\overline{\text{RESET}}$ Pulse Width Low	$4 \times t_{ck}$		ns
t_{SRST}	$\overline{\text{RESET}}$ Setup Before CLKIN Low	8		ns

[1] Applies after the power-up sequence is complete. At power-up, the processor's internal phase-locked loop requires no more than 100 µs while $\overline{\text{RESET}}$ is low, assuming stable V_{dd} and CLKIN (not including start-up time of external clock oscillator).

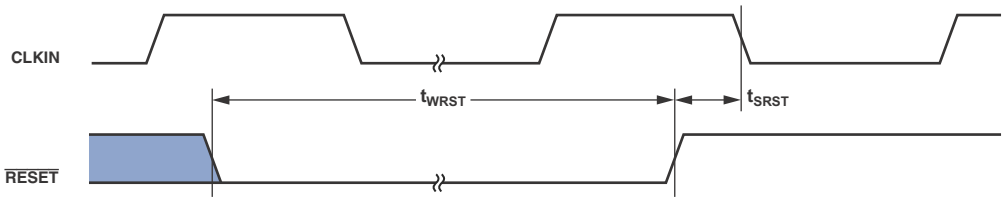

Figure 9. Reset

Running Reset

The following timing specification applies to $\overline{\text{RESETOUT}}$/ $\overline{\text{RUNRSTIN}}$ pin when it is configured as $\overline{\text{RUNRSTIN}}$.

Table 21. Running Reset

Parameter		Min	Max	Unit
Timing Requirements				
$t_{WRUNRST}$	Running $\overline{\text{RESET}}$ Pulse Width Low	$4 \times t_{CK}$		ns
$t_{SRUNRST}$	Running $\overline{\text{RESET}}$ Setup Before CLKIN High	8		ns

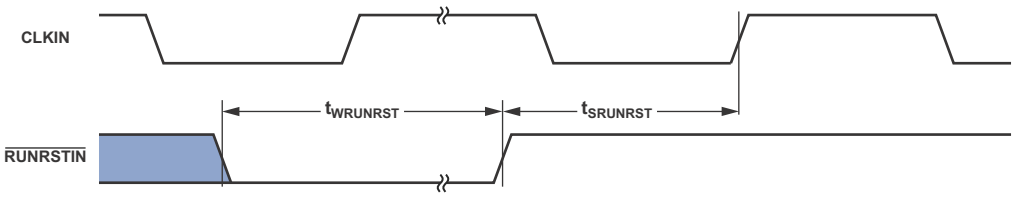

Figure 10. Running Reset

Interrupts

The following timing specification applies to the FLAG0, FLAG1, and FLAG2 pins when they are configured as $\overline{\text{IRQ0}}$, $\overline{\text{IRQ1}}$, and $\overline{\text{IRQ2}}$ interrupts, as well as the DAI_P20-1 and DPI_P14-1 pins when they are configured as interrupts.

Table 22. Interrupts

Parameter		Min	Max	Unit
Timing Requirement				
t_{IPW}	$\overline{\text{IRQx}}$ Pulse Width	$2 \times t_{PCLK} + 2$		ns

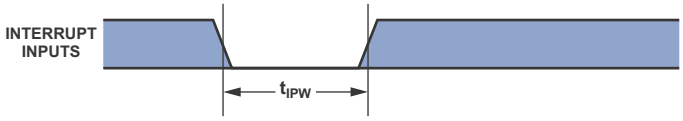

Figure 11. Interrupts

Core Timer

The following timing specification applies to FLAG3 when it is configured as the core timer (TMREXP).

Table 23. Core Timer

Parameter		Min	Max	Unit
Switching Characteristic				
t_{WCTIM}	TMREXP Pulse Width	$4 \times t_{PCLK} - 1.2$		ns

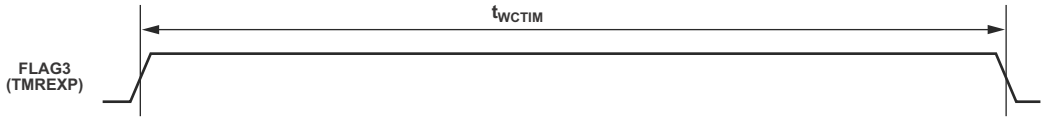

Figure 12. Core Timer

Timer PWM_OUT Cycle Timing

The following timing specification applies to timer0 and timer1 in PWM_OUT (pulse-width modulation) mode. Timer signals are routed to the DPI_P14–1 pins through the DPI SRU. Therefore, the timing specifications provided below are valid at the DPI_P14–1 pins.

Table 24. Timer PWM_OUT Timing

Parameter		Min	Max	Unit
Switching Characteristic				
t_{PWMO}	Timer Pulse Width Output	$2 \times t_{PCLK} - 1.2$	$2 \times (2^{31} - 1) \times t_{PCLK}$	ns

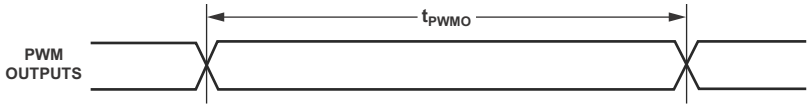

Figure 13. Timer PWM_OUT Timing

Timer WDTH_CAP Timing

The following timing specification applies to timer0 and timer1, and in WDTH_CAP (pulse width count and capture) mode. Timer signals are routed to the DPI_P14–1 pins through the SRU. Therefore, the timing specification provided below is valid at the DPI_P14–1 pins.

Table 25. Timer Width Capture Timing

Parameter		Min	Max	Unit
Timing Requirement				
t_{PWI}	Timer Pulse Width	$2 \times t_{PCLK}$	$2 \times (2^{31} - 1) \times t_{PCLK}$	ns

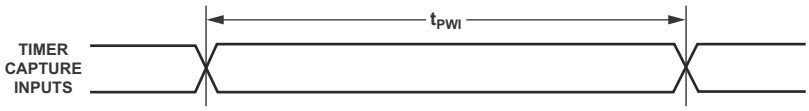

Figure 14. Timer Width Capture Timing

Watch Dog Timer Timing

Table 26. Watch Dog Timer Timing

Parameter		Min	Max	Unit
Timing Requirement				
$t_{WDTCLKPER}$		100	1000	ns
Switching Characteristics				
t_{RST}	WDT Clock Rising Edge to Watch Dog Timer $\overline{\text{RESET}}$ Falling Edge	3	7.6	ns
t_{RSTPW}	Reset Pulse Width	$64 \times t_{WDTCLKPER}$[1]		ns

[1] When the internal oscillator is used, the $1/t_{WDTCLKPER}$ varies from 1.5 MHz to 2.5 MHz and the WDT_CLKIN pin should be pulled low.

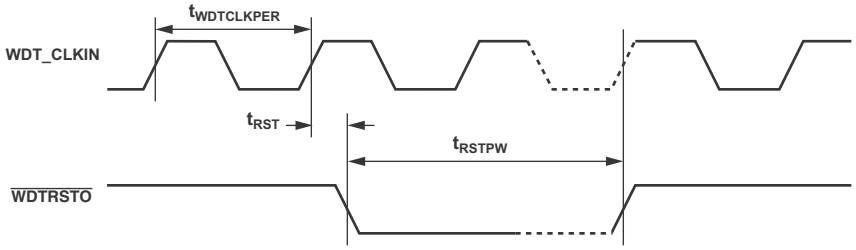

Figure 15. Watch Dog Timer Timing

Pin to Pin Direct Routing (DAI and DPI)

For direct pin connections only (for example DAI_PB01_I to DAI_PB02_O).

Table 27. DAI/DPI Pin to Pin Routing

Parameter		Min	Max	Unit
Timing Requirement				
t_{DPIO}	Delay DAI/DPI Pin Input Valid to DAI/DPI Output Valid	1.5	10	ns

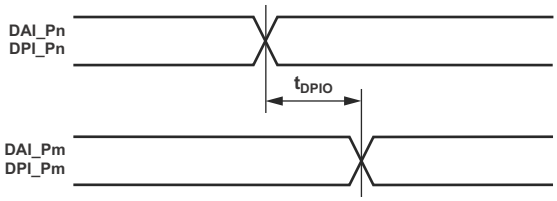

Figure 16. DAI Pin to Pin Direct Routing

Precision Clock Generator (Direct Pin Routing)

This timing is only valid when the SRU is configured such that the precision clock generator (PCG) takes its inputs directly from the DAI pins (via pin buffers) and sends its outputs directly to the DAI pins. For the other cases, where the PCG's inputs and outputs are not directly routed to/from DAI pins (via pin buffers) there is no timing data available. All timing parameters and switching characteristics apply to external DAI pins (DAI_P01 – DAI_P20).

Table 28. Precision Clock Generator (Direct Pin Routing)

Parameter		Min	Max	Unit
Timing Requirements				
t_{PCGIP}	Input Clock Period	$t_{PCLK} \times 4$		ns
t_{STRIG}	PCG Trigger Setup Before Falling Edge of PCG Input Clock	4.5		ns
t_{HTRIG}	PCG Trigger Hold After Falling Edge of PCG Input Clock	3		ns
Switching Characteristics				
t_{DPCGIO}	PCG Output Clock and Frame Sync Active Edge Delay After PCG Input Clock	2.5	12.5	ns
$t_{DTRIGCLK}$	PCG Output Clock Delay After PCG Trigger	$2.5 + (2.5 \times t_{PCGIP})$	$12.5 + (2.5 \times t_{PCGIP})$	ns
$t_{DTRIGFS}$	PCG Frame Sync Delay After PCG Trigger	$2.5 + ((2.5 + D - PH) \times t_{PCGIP})$	$12.5 + ((2.5 + D - PH) \times t_{PCGIP})$	ns
t_{PCGOW}[1]	Output Clock Period	$2 \times t_{PCGIP} - 1$		ns

D = FSxDIV, PH = FSxPHASE. For more information, see the ADSP-214xx SHARC Processor Hardware Reference, "Precision Clock Generators" chapter.

[1] Normal mode of operation.

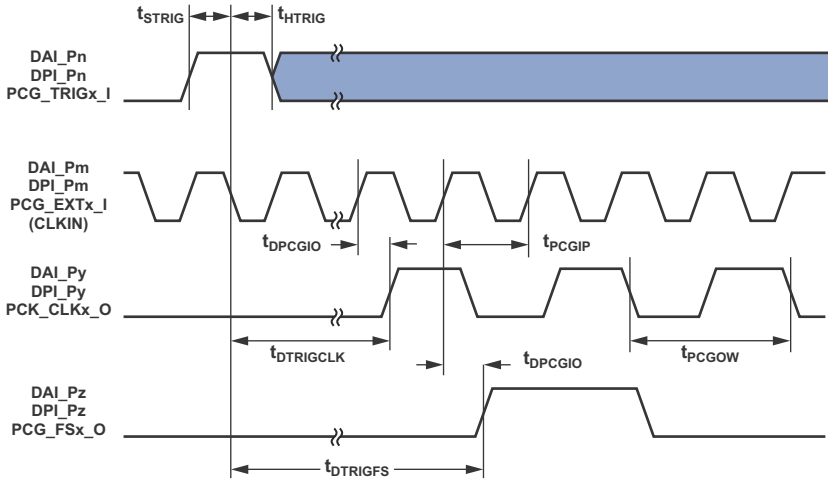

Figure 17. Precision Clock Generator (Direct Pin Routing)

Flags

The timing specifications provided below apply to ADDR23–0 and DATA7–0 when configured as FLAGS. See Table 10 on Page 14 for more information on flag use.

Table 29. Flags

Parameter		Min	Max	Unit
Timing Requirement				
t_{FIPW}	FLAGs IN Pulse Width[1]	$2 \times t_{PCLK} + 3$		ns
Switching Characteristic				
t_{FOPW}	FLAGs OUT Pulse Width[1]	$2 \times t_{PCLK} - 3.5$		ns

[1] This is applicable when the Flags are connected to DPI_P14–1, ADDR23–0, DATA7–0 and FLAG3–0 pins.

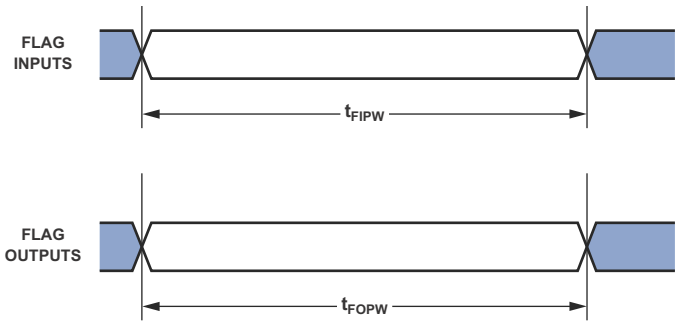

Figure 18. Flags

SDRAM Interface Timing

Table 30. SDRAM Interface Timing

Parameter		133 MHz Min	133 MHz Max	150 MHz Min	150 MHz Max	Unit
Timing Requirements						
t_{SSDAT}	DATA Setup Before SDCLK	0.7		0.7		ns
t_{HSDAT}	DATA Hold After SDCLK	1.66		1.5		ns
Switching Characteristics						
t_{SDCLK}[1]	SDCLK Period	7.5		6.66		ns
t_{SDCLKH}	SDCLK Width High	2.5		2.2		ns
t_{SDCLKL}	SDCLK Width Low	2.5		2.2		ns
t_{DCAD}[2]	Command, ADDR, Data Delay After SDCLK		5		4.75	ns
t_{HCAD}[2]	Command, ADDR, Data Hold After SDCLK	1		1		ns
t_{DSDAT}	Data Disable After SDCLK		6.2		5.3	ns
t_{ENSDAT}	Data Enable After SDCLK	0.3		0.3		ns

[1] Systems should use the SDRAM model with a speed grade higher than the desired SDRAM controller speed. For example, to run the SDRAM controller at 133 MHz the SDRAM model with a speed grade of 143 MHz or above should be used. See Engineer-to-Engineer Note "Interfacing SDRAM memory to SHARC processors (EE-286)" for more information on hardware design guidelines for the SDRAM interface.
[2] Command pins include: $\overline{SDCAS}$, $\overline{SDRAS}$, $\overline{SDWE}$, $\overline{MSx}$, SDA10, SDQM, SDCKE.

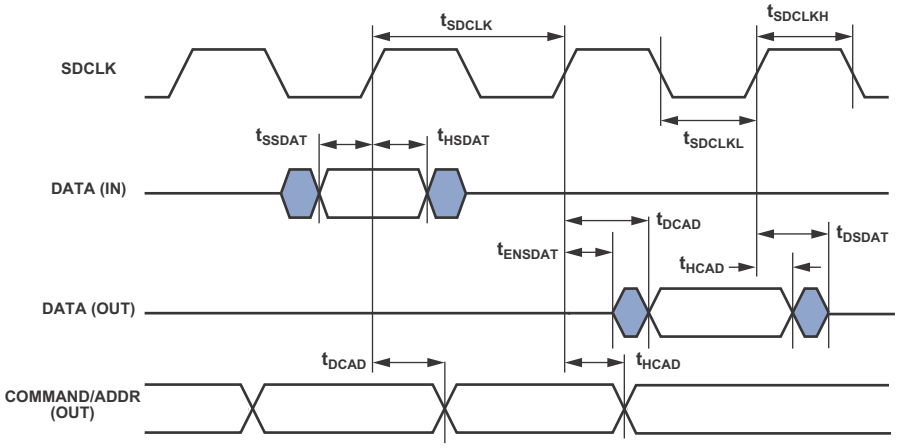

Figure 19. SDRAM Interface Timing

AMI Read

Use these specifications for asynchronous interfacing to memories. Note that timing for AMI_ACK, ADDR, DATA, $\overline{\text{AMI_RD}}$, $\overline{\text{AMI_WR}}$, and strobe timing parameters only apply to asynchronous access mode.

Table 31. AMI Read

Parameter		Min	Max	Unit
Timing Requirements				
t_{DAD}[1, 2, 3]	Address Selects Delay to Data Valid		W + t_{SDCLK} – 6.32	ns
t_{DRLD}[1, 3]	$\overline{\text{AMI_RD}}$ Low to Data Valid		W – 3	ns
t_{SDS}[4, 5]	Data Setup to $\overline{\text{AMI_RD}}$ High	2.6		ns
t_{HDRH}	Data Hold from $\overline{\text{AMI_RD}}$ High	0.4		ns
t_{DAAK}[2, 6]	AMI_ACK Delay from Address Selects		t_{SDCLK} – 10. + W	ns
t_{DSAK}4	AMI_ACK Delay from $\overline{\text{AMI_RD}}$ Low		W – 7.0	ns
Switching Characteristics				
t_{DRHA}	Address Selects Hold After $\overline{\text{AMI_RD}}$ High	RHC+ 0.38		ns
t_{DARL}[2]	Address Selects to $\overline{\text{AMI_RD}}$ Low	t_{SDCLK} – 5		ns
t_{RW}	$\overline{\text{AMI_RD}}$ Pulse Width	W – 1.4		ns
t_{RWR}	$\overline{\text{AMI_RD}}$ High to $\overline{\text{AMI_RD}}$ Low	HI + t_{SDCLK} – 1.2		ns

W = (number of wait states specified in AMICTLx register) × t_{SDCLK}.
RHC = (number of Read Hold Cycles specified in AMICTLx register) × t_{SDCLK}
Where PREDIS = 0
HI = RHC: Read to Read from same bank
HI = RHC + IC: Read to Read from different bank
HI = RHC + Max (IC, (4 × t_{SDCLK})) : Read to Write from same or different bank
Where PREDIS = 1
HI = RHC + Max (IC, (4 × t_{SDCLK})) : Read to Write from same or different bank
HI = RHC + (3 × t_{SDCLK}): Read to Read from same bank
HI = RHC + Max (IC, (3 × t_{SDCLK})) : Read to Read from different bank
IC = (number of idle cycles specified in AMICTLx register) × t_{SDCLK}
H = (number of hold cycles specified in AMICTLx register) × tSDCLK.

[1] Data delay/setup: System must meet t_{DAD}, t_{DRLD}, or t_{SDS}.
[2] The falling edge of $\overline{\text{MS}}$x, is referenced.
[3] The maximum limit of timing requirement values for t_{DAD} and t_{DRLD} parameters are applicable for the case where AMI_ACK is always high.
[4] Note that timing for AMI_ACK, ADDR, DATA, $\overline{\text{AMI_RD}}$, $\overline{\text{AMI_WR}}$, and strobe timing parameters only apply to asynchronous access mode.
[5] Data hold: User must meet t_{HDRH} in asynchronous access mode. See Test Conditions on Page 61 for the calculation of hold times given capacitive and dc loads.
[6] AMI_ACK delay/setup: User must meet t_{daak}, or t_{dsak}, for deassertion of AMI_ACK (low).

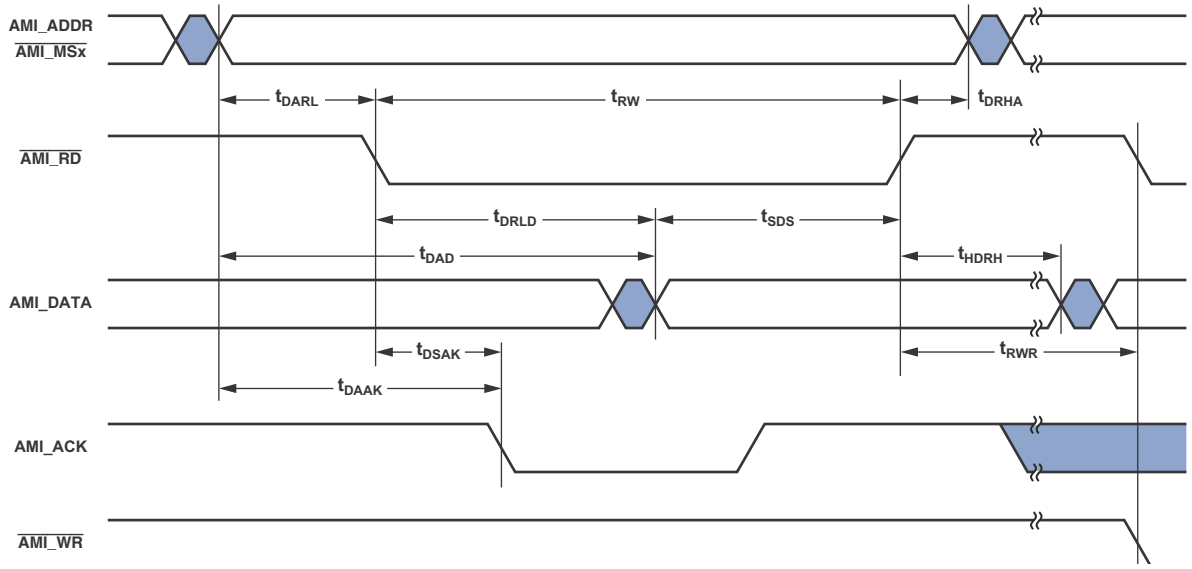

Figure 20. AMI Read

AMI Write

Use these specifications for asynchronous interfacing to memories. Note that timing for AMI_ACK, ADDR, DATA, $\overline{\text{AMI_RD}}$, $\overline{\text{AMI_WR}}$, and strobe timing parameters only apply to asynchronous access mode.

Table 32. AMI Write

Parameter		Min	Max	Unit
Timing Requirements				
t_{DAAK}	AMI_ACK Delay from Address Selects[1, 2]		t_{SDCLK} – 10.1 + W	ns
t_{DSAK}	AMI_ACK Delay from $\overline{\text{AMI_WR}}$ Low[1, 3]		W – 7.1	ns
Switching Characteristics				
t_{DAWH}	Address Selects to $\overline{\text{AMI_WR}}$ Deasserted[2]	t_{SDCLK} – 4.4 + W		ns
t_{DAWL}	Address Selects to $\overline{\text{AMI_WR}}$ Low[2]	t_{SDCLK} – 4.5		ns
t_{WW}	$\overline{\text{AMI_WR}}$ Pulse Width	W – 1.3		ns
t_{DDWH}	Data Setup Before $\overline{\text{AMI_WR}}$ High	t_{SDCLK} – 4.3 + W		ns
t_{DWHA}	Address Hold After $\overline{\text{AMI_WR}}$ Deasserted	H		ns
t_{DWHD}	Data Hold After $\overline{\text{AMI_WR}}$ Deasserted	H		ns
t_{DATRWH}	Data Disable After $\overline{\text{AMI_WR}}$ Deasserted[4]	t_{SDCLK} – 1.37 + H	t_{SDCLK} + 6.75 + H	ns
t_{WWR}	$\overline{\text{AMI_WR}}$ High to $\overline{\text{AMI_WR}}$ Low[5]	t_{SDCLK} – 1.5 + H		ns
t_{DDWR}	Data Disable Before $\overline{\text{AMI_RD}}$ Low	2 × t_{SDCLK} – 7.1		ns
t_{WDE}	$\overline{\text{AMI_WR}}$ Low to Data Enabled	t_{SDCLK} – 4.5		ns

W = (number of wait states specified in AMICTLx register) × t_{SDCLK}
H = (number of hold cycles specified in AMICTLx register) × t_{SDCLK}

[1] AMI_ACK delay/setup: System must meet t_{DAAK}, or t_{DSAK}, for deassertion of AMI_ACK (low).
[2] The falling edge of $\overline{\text{AMI_MSx}}$ is referenced.
[3] Note that timing for AMI_ACK, ADDR, DATA, $\overline{\text{AMI_RD}}$, $\overline{\text{AMI_WR}}$, and strobe timing parameters only applies to asynchronous access mode.
[4] See Test Conditions on Page 61 for calculation of hold times given capacitive and dc loads.
[5] For Write to Write: t_{SDCLK} + H, for both same bank and different bank. For Write to Read: 3 × t_{SDCLK} + H , for the same bank and different banks.

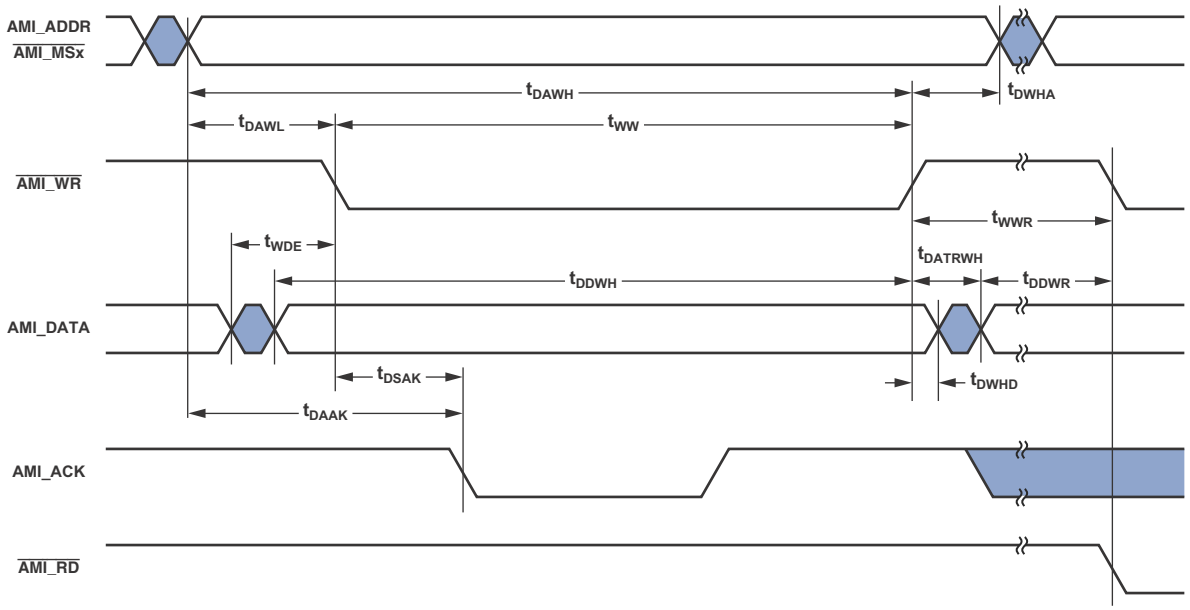

Figure 21. AMI Write

Serial Ports

In slave transmitter mode and master receiver mode, the maximum serial port frequency is $f_{PCLK}/8$. In master transmitter mode and slave receiver mode, the maximum serial port clock frequency is $f_{PCLK}/4$.

To determine whether communication is possible between two devices at clock speed, n, the following specifications must be confirmed: 1) frame sync delay and frame sync setup and hold, 2) data delay and data setup and hold, and 3) SCLK width.

Serial port signals (SCLK, FS, Data Channel A, Data Channel B) are routed to the DAI_P20–1 pins using the SRU. Therefore, the timing specifications provided below are valid at the DAI_P20–1 pins.

Table 33. Serial Ports—External Clock

Parameter		Min	Max	Unit
Timing Requirements				
t_{SFSE}[1]	Frame Sync Setup Before SCLK (Externally Generated Frame Sync in Either Transmit or Receive Mode)	2.5		ns
t_{HFSE}[1]	Frame Sync Hold After SCLK (Externally Generated Frame Sync in Either Transmit or Receive Mode)	2.5		ns
t_{SDRE}[1]	Receive Data Setup Before Receive SCLK	2.5		ns
t_{HDRE}[1]	Receive Data Hold After SCLK	2.5		ns
t_{SCLKW}	SCLK Width	$(t_{PCLK} \times 4) \div 2 - 1.5$		ns
t_{SCLK}	SCLK Period	$t_{PCLK} \times 4$		ns
Switching Characteristics				
t_{DFSE}[2]	Frame Sync Delay After SCLK (Internally Generated Frame Sync in Either Transmit or Receive Mode)		15	ns
t_{HOFSE}[2]	Frame Sync Hold After SCLK (Internally Generated Frame Sync in Either Transmit or Receive Mode)	2		ns
t_{DDTE}[2]	Transmit Data Delay After Transmit SCLK		15	ns
t_{HDTE}[2]	Transmit Data Hold After Transmit SCLK	2		ns

[1] Referenced to sample edge.
[2] Referenced to drive edge.

Table 34. Serial Ports—Internal Clock

Parameter		Min	Max	Unit
Timing Requirements				
t_{SFSI}[1]	Frame Sync Setup Before SCLK (Externally Generated Frame Sync in Either Transmit or Receive Mode)	10.5		ns
t_{HFSI}[1]	Frame Sync Hold After SCLK (Externally Generated Frame Sync in Either Transmit or Receive Mode)	2.5		ns
t_{SDRI}[1]	Receive Data Setup Before SCLK	10.5		ns
t_{HDRI}[1]	Receive Data Hold After SCLK	2.5		ns
Switching Characteristics				
t_{DFSI}[2]	Frame Sync Delay After SCLK (Internally Generated Frame Sync in Transmit Mode)		5	ns
t_{HOFSI}[2]	Frame Sync Hold After SCLK (Internally Generated Frame Sync in Transmit Mode)	–1.0		ns
t_{DFSIR}[2]	Frame Sync Delay After SCLK (Internally Generated Frame Sync in Receive Mode)		10.7	ns
t_{HOFSIR}[2]	Frame Sync Hold After SCLK (Internally Generated Frame Sync in Receive Mode)	–1.0		ns
t_{DDTI}[2]	Transmit Data Delay After SCLK		4	ns
t_{HDTI}[2]	Transmit Data Hold After SCLK	–1.0		ns
t_{SCKLIW}	Transmit or Receive SCLK Width	$2 \times t_{PCLK} - 1.5$	$2 \times t_{PCLK} + 1.5$	ns

[1] Referenced to the sample edge.
[2] Referenced to drive edge.

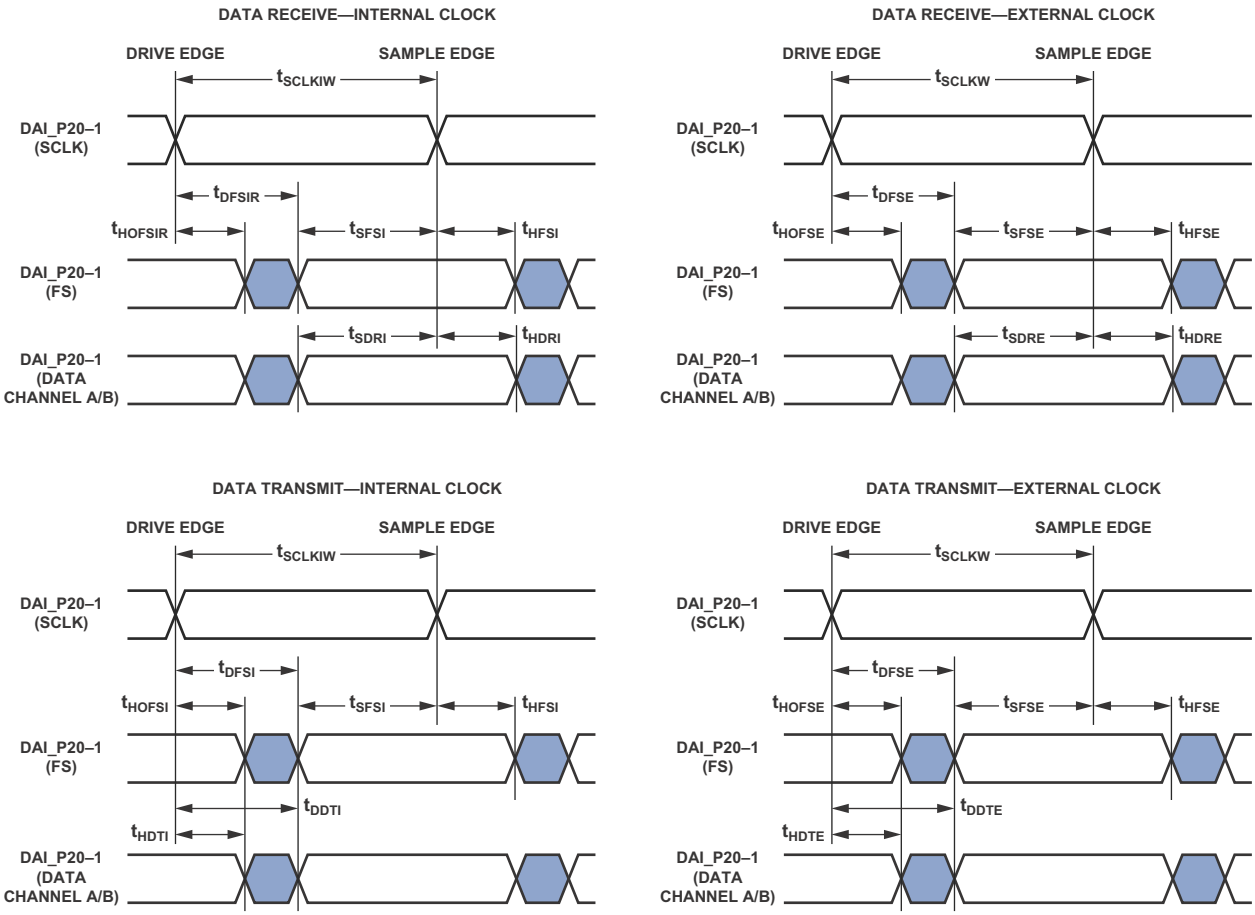

Figure 22. Serial Ports

Table 35. Serial Ports—External Late Frame Sync

Parameter		Min	Max	Unit
Switching Characteristics				
$t_{DDTLFSE}$[1]	Data Delay from Late External Transmit Frame Sync or External Receive Frame Sync with MCE = 1, MFD = 0		13.5	ns
$t_{DDTENFS}$[1]	Data Enable for MCE = 1, MFD = 0	0.5		ns

[1] The $t_{DDTLFSE}$ and $t_{DDTENFS}$ parameters apply to left-justified as well as DSP serial mode, and MCE = 1, MFD = 0.

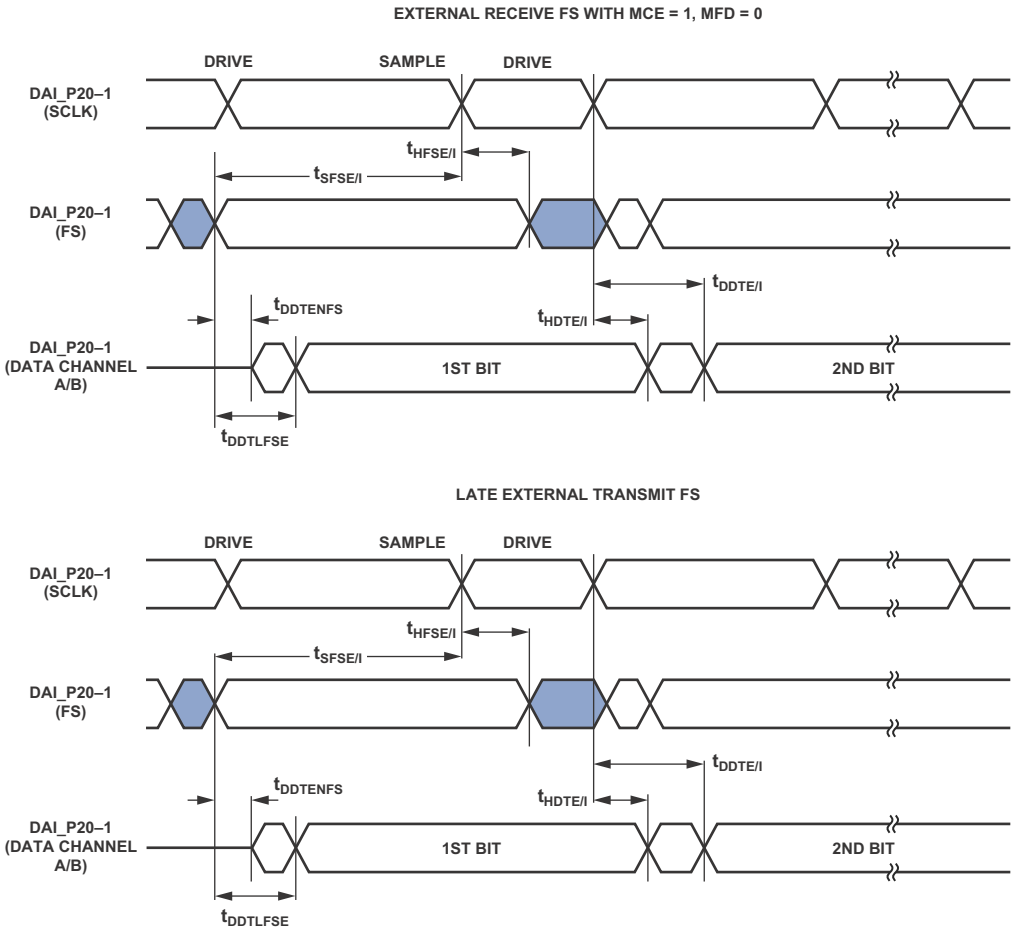

Figure 23. External Late Frame Sync[1]

[1] This figure reflects changes made to support left-justified mode.

Table 36. Serial Ports—Enable and Three-State

Parameter		Min	Max	Unit
Switching Characteristics				
t_{DDTEN}[1]	Data Enable from External Transmit SCLK	2		ns
t_{DDTTE}[1]	Data Disable from External Transmit SCLK		20	ns
t_{DDTIN}[1]	Data Enable from Internal Transmit SCLK	–1		ns

[1] Referenced to drive edge.

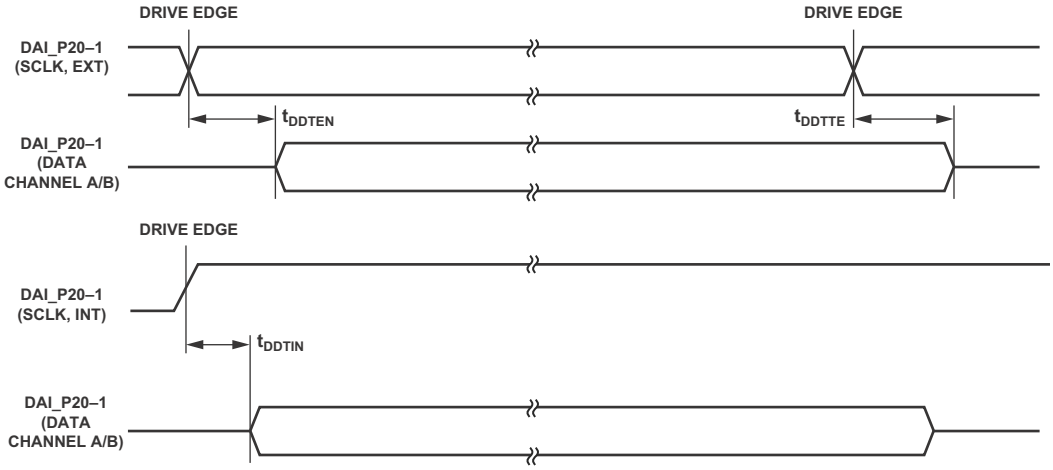

Figure 24. Enable and Three-State

The SPORTx_TDV_O output signal (routing unit) becomes active in SPORT multichannel/packed mode. During transmit slots (enabled with active channel selection registers), the SPORTx_TDV_O is asserted for communication with external devices.

Table 37. Serial Ports—TDV (Transmit Data Valid)

Parameter		Min	Max	Unit
Switching Characteristics[1]				
t_{DRDVEN}	TDV Assertion Delay from Drive Edge of External Clock	3		ns
t_{DFDVEN}	TDV Deassertion Delay from Drive Edge of External Clock		13.25	ns
t_{DRDVIN}	TDV Assertion Delay from Drive Edge of Internal Clock	–0.1		ns
t_{DFDVIN}	TDV Deassertion Delay from Drive Edge of Internal Clock		3.5	ns

[1] Referenced to drive edge.

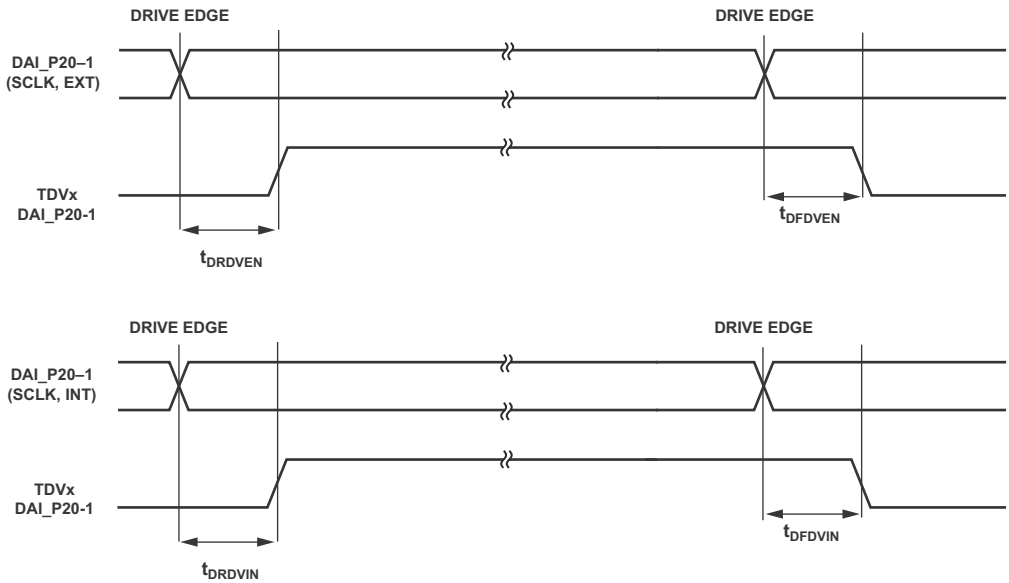

Figure 25. Serial Ports—TDM Internal and External Clock

Input Data Port (IDP)

The timing requirements for the IDP are given in Table 38. IDP signals are routed to the DAI_P20–1 pins using the SRU. Therefore, the timing specifications provided below are valid at the DAI_P20–1 pins.

Table 38. Input Data Port (IDP)

Parameter		Min	Max	Unit
Timing Requirements				
t_{SISFS}[1]	Frame Sync Setup Before Serial Clock Rising Edge	3.8		ns
t_{SIHFS}[1]	Frame Sync Hold After Serial Clock Rising Edge	2.5		ns
t_{SISD}[1]	Data Setup Before Serial Clock Rising Edge	2.5		ns
t_{SIHD}[1]	Data Hold After Serial Clock Rising Edge	2.5		ns
$t_{IDPCLKW}$	Clock Width	$(t_{PCLK} \times 4) \div 2 - 1$		ns
t_{IDPCLK}	Clock Period	$t_{PCLK} \times 4$		ns

[1] The serial clock, data and frame sync signals can come from any of the DAI pins. The serial clock and frame sync signals can also come via PCG or SPORTs. PCG's input can be either CLKIN or any of the DAI pins.

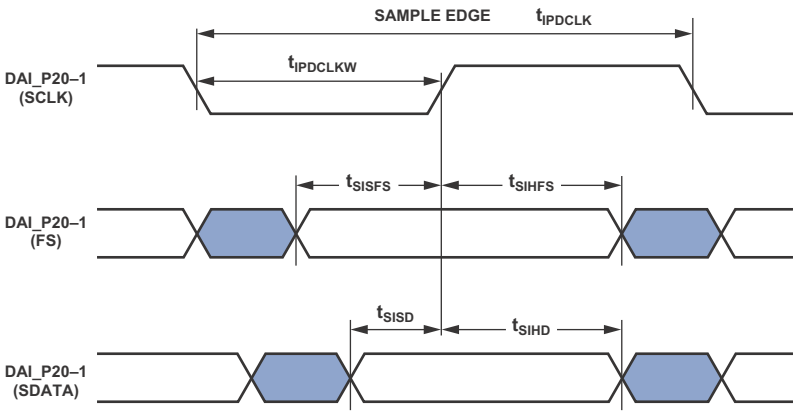

Figure 26. IDP Master Timing

Parallel Data Acquisition Port (PDAP)

The timing requirements for the PDAP are provided in Table 39. PDAP is the parallel mode operation of Channel 0 of the IDP. For details on the operation of the PDAP, see the PDAP chapter of the *ADSP-214xx SHARC Processor Hardware Reference*. Note that the 20 bits of external PDAP data can be provided through the ADDR23–0 pins or over the DAI pins.

Table 39. Parallel Data Acquisition Port (PDAP)

Parameter		Min	Max	Unit
Timing Requirements				
t_{SPHOLD}[1]	PDAP_HOLD Setup Before PDAP_CLK Sample Edge	2.5		ns
t_{HPHOLD}[1]	PDAP_HOLD Hold After PDAP_CLK Sample Edge	2.5		ns
t_{PDSD}[1]	PDAP_DAT Setup Before SCLK PDAP_CLK Sample Edge	3.85		ns
t_{PDHD}[1]	PDAP_DAT Hold After SCLK PDAP_CLK Sample Edge	2.5		ns
t_{PDCLKW}	Clock Width	$(t_{PCLK} \times 4) \div 2 - 3$		ns
t_{PDCLK}	Clock Period	$t_{PCLK} \times 4$		ns
Switching Characteristics				
t_{PDHLDD}	Delay of PDAP Strobe After Last PDAP_CLK Capture Edge for a Word	$2 \times t_{PCLK} + 3$		ns
t_{PDSTRB}	PDAP Strobe Pulse Width	$2 \times t_{PCLK} - 1.5$		ns

[1] Source pins of DATA and control are ADDR23–0 or DAI pins. Source pins for SCLK and FS are: 1) DAI pins, 2) CLKIN through PCG, or 3) DAI pins through PCG.

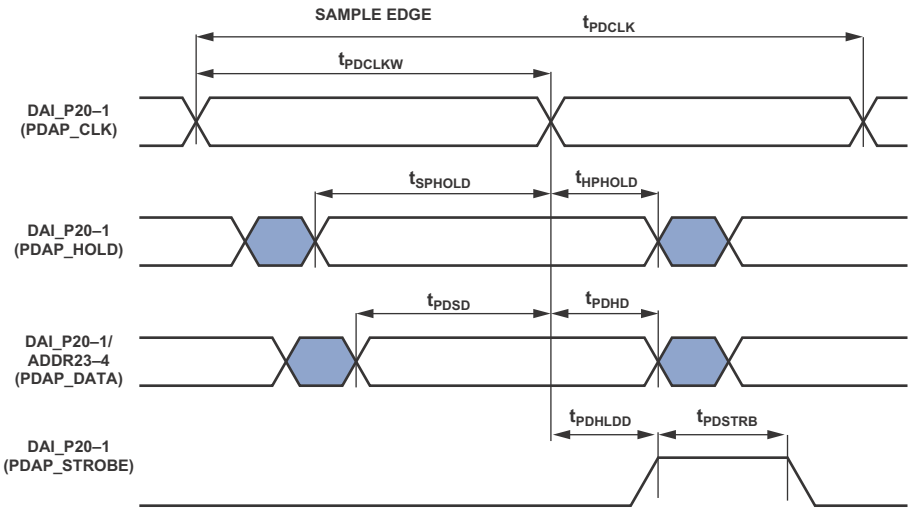

Figure 27. PDAP Timing

Sample Rate Converter—Serial Input Port

The ASRC input signals are routed from the DAI_P20–1 pins using the SRU. Therefore, the timing specifications provided in Table 40 are valid at the DAI_P20–1 pins.

Table 40. ASRC, Serial Input Port

Parameter		Min	Max	Unit
Timing Requirements				
t_{SRCSFS}[1]	Frame Sync Setup Before Serial Clock Rising Edge	4		ns
t_{SRCHFS}[1]	Frame Sync Hold After Serial Clock Rising Edge	5.5		ns
t_{SRCSD}[1]	Data Setup Before Serial Clock Rising Edge	4		ns
t_{SRCHD}[1]	Data Hold After Serial Clock Rising Edge	5.5		ns
$t_{SRCCLKW}$	Clock Width	$(t_{PCLK} \times 4) \div 2 - 1$		ns
t_{SRCCLK}	Clock Period	$t_{PCLK} \times 4$		ns

[1] The serial clock, data and frame sync signals can come from any of the DAI pins. The serial clock and frame sync signals can also come via PCG or SPORTs. PCG's input can be either CLKIN or any of the DAI pins.

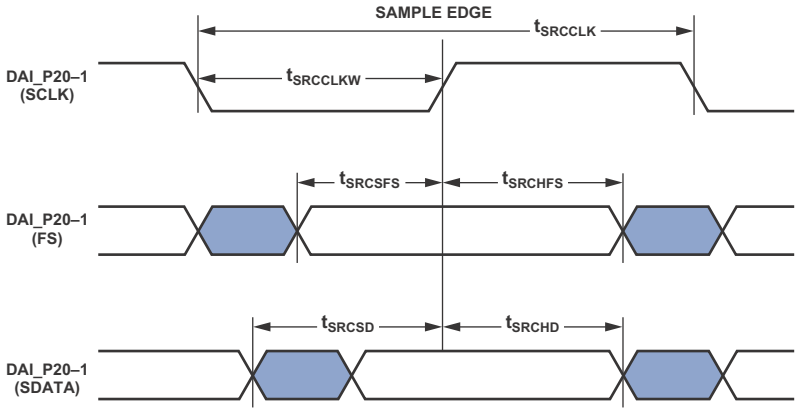

Figure 28. ASRC Serial Input Port Timing

Sample Rate Converter—Serial Output Port

For the serial output port, the frame sync is an input, and it should meet setup and hold times with regard to the serial clock on the output port. The serial data output has a hold time and delay specification with regard to serial clock. Note that serial clock rising edge is the sampling edge and the falling edge is the drive edge.

Table 41. ASRC, Serial Output Port

Parameter		Min	Max	Unit
Timing Requirements				
t_{SRCSFS}[1]	Frame Sync Setup Before Serial Clock Rising Edge	4		ns
t_{SRCHFS}[1]	Frame Sync Hold After Serial Clock Rising Edge	5.5		ns
$t_{SRCCLKW}$	Clock Width	$(t_{PCLK} \times 4) \div 2 - 1$		ns
t_{SRCCLK}	Clock Period	$t_{PCLK} \times 4$		ns
Switching Characteristics				
t_{SRCTDD}[1]	Transmit Data Delay After Serial Clock Falling Edge		13	ns
t_{SRCTDH}[1]	Transmit Data Hold After Serial Clock Falling Edge	1		ns

[1] The serial clock, data and frame sync signals can come from any of the DAI pins. The serial clock and frame sync signals can also come via PCG or SPORTs. PCG's input can be either CLKIN or any of the DAI pins.

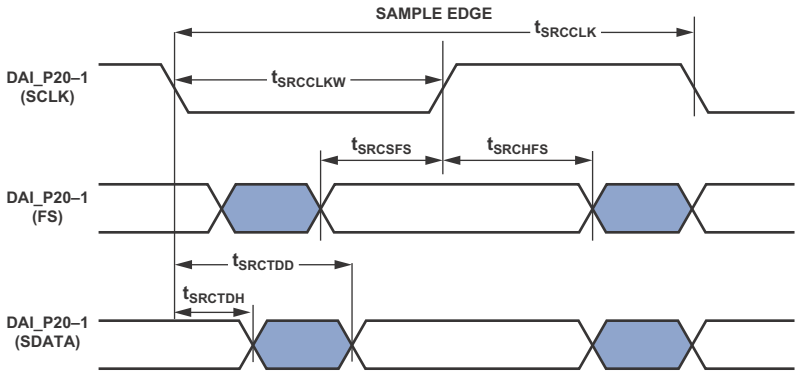

Figure 29. ASRC Serial Output Port Timing

Pulse-Width Modulation Generators (PWM)

The following timing specifications apply when the ADDR23–8/DPI_14–1 pins are configured as PWM.

Table 42. Pulse-Width Modulation (PWM) Timing

Parameter		Min	Max	Unit
Switching Characteristics				
t_{PWMW}	PWM Output Pulse Width	$t_{PCLK} - 2$	$(2^{16} - 2) \times t_{PCLK} - 2$	ns
t_{PWMP}	PWM Output Period	$2 \times t_{PCLK} - 1.5$	$(2^{16} - 1) \times t_{PCLK} - 1.5$	ns

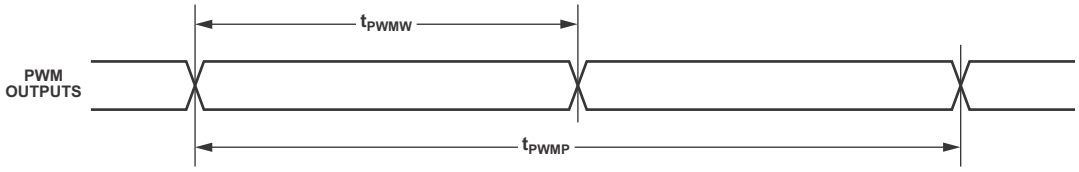

Figure 30. PWM Timing

S/PDIF Transmitter

Serial data input to the S/PDIF transmitter can be formatted as left justified, I²S, or right justified with word widths of 16, 18, 20, or 24 bits. The following sections provide timing for the transmitter.

S/PDIF Transmitter-Serial Input Waveforms

Figure 31 shows the right-justified mode. Frame sync is high for the left channel and low for the right channel. Data is valid on the rising edge of serial clock. The MSB is delayed the minimum in 24-bit output mode or the maximum in 16-bit output mode from a frame sync transition, so that when there are 64 serial clock periods per frame sync period, the LSB of the data is right-justified to the next frame sync transition.

Table 43. S/PDIF Transmitter Right-Justified Mode

Parameter		Nominal	Unit
Timing Requirement			
t_{RJD}	FS to MSB Delay in Right-Justified Mode		
	16-Bit Word Mode	16	SCLK
	18-Bit Word Mode	14	SCLK
	20-Bit Word Mode	12	SCLK
	24-Bit Word Mode	8	SCLK

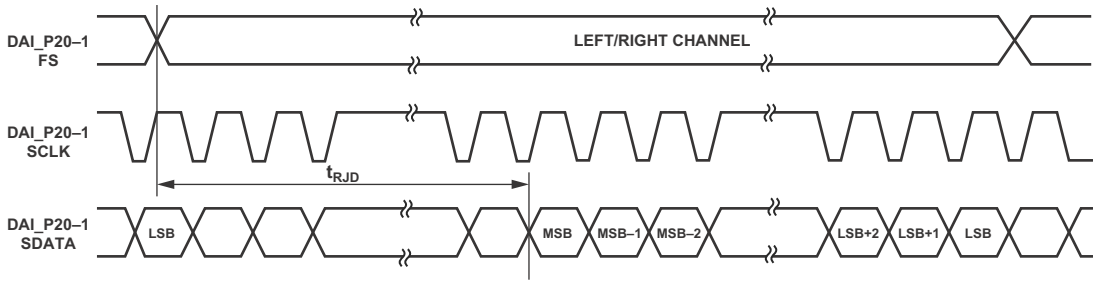

Figure 31. Right-Justified Mode

Figure 32 shows the default I²S-justified mode. The frame sync is low for the left channel and high for the right channel. Data is valid on the rising edge of serial clock. The MSB is left-justified to the frame sync transition but with a delay.

Table 44. S/PDIF Transmitter I²S Mode

Parameter		Nominal	Unit
Timing Requirement			
t_{I2SD}	FS to MSB Delay in I²S Mode	1	SCLK

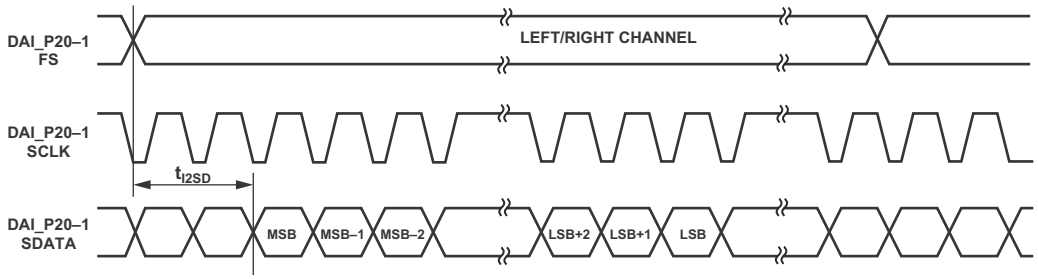

Figure 32. I²S-Justified Mode

Figure 33 shows the left-justified mode. The frame sync is high for the left channel and low for the right channel. Data is valid on the rising edge of serial clock. The MSB is left-justified to the frame sync transition with no delay.

Table 45. S/PDIF Transmitter Left-Justified Mode

Parameter		Nominal	Unit
Timing Requirement			
t_{LJD}	FS to MSB Delay in Left-Justified Mode	0	SCLK

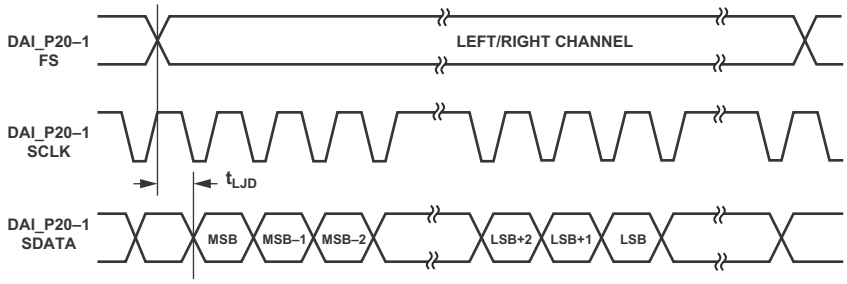

Figure 33. Left-Justified Mode

S/PDIF Transmitter Input Data Timing

The timing requirements for the S/PDIF transmitter are given in Table 46. Input signals are routed to the DAI_P20–1 pins using the SRU. Therefore, the timing specifications provided below are valid at the DAI_P20–1 pins.

Table 46. S/PDIF Transmitter Input Data Timing

Parameter		Min	Max	Unit
Timing Requirements				
t_{SISFS}[1]	Frame Sync Setup Before Serial Clock Rising Edge	3		ns
t_{SIHFS}[1]	Frame Sync Hold After Serial Clock Rising Edge	3		ns
t_{SISD}[1]	Data Setup Before Serial Clock Rising Edge	3		ns
t_{SIHD}[1]	Data Hold After Serial Clock Rising Edge	3		ns
$t_{SITXCLKW}$	Transmit Clock Width	9		ns
$t_{SITXCLK}$	Transmit Clock Period	20		ns
$t_{SISCLKW}$	Clock Width	36		ns
t_{SISCLK}	Clock Period	80		ns

[1] The serial clock, data and frame sync signals can come from any of the DAI pins. The serial clock and frame sync signals can also come via PCG or SPORTs. PCG's input can be either CLKIN or any of the DAI pins.

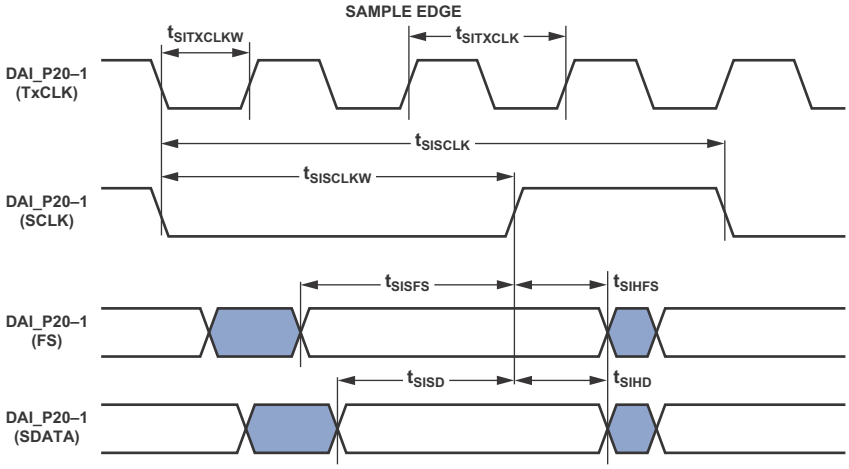

Figure 34. S/PDIF Transmitter Input Timing

Oversampling Clock (TxCLK) Switching Characteristics

The S/PDIF transmitter requires an oversampling clock input. This high frequency clock (TxCLK) input is divided down to generate the internal biphase clock.

Table 47. Oversampling Clock (TxCLK) Switching Characteristics

Parameter	Max	Unit
Frequency for TxCLK = 384 × Frame Sync	Oversampling Ratio × Frame Sync ≤ $1/t_{SITXCLK}$	MHz
Frequency for TxCLK = 256 × Frame Sync	49.2	MHz
Frame Rate (FS)	192.0	kHz

S/PDIF Receiver

The following section describes timing as it relates to the S/PDIF receiver.

Internal Digital PLL Mode

In the internal digital phase-locked loop mode the internal PLL (digital PLL) generates the 512 × FS clock.

Table 48. S/PDIF Receiver Internal Digital PLL Mode Timing

Parameter		Min	Max	Unit
Switching Characteristics				
t_{DFSI}	FS Delay After Serial Clock		5	ns
t_{HOFSI}	FS Hold After Serial Clock	–2		ns
t_{DDTI}	Transmit Data Delay After Serial Clock		5	ns
t_{HDTI}	Transmit Data Hold After Serial Clock	–2		ns
t_{SCLKIW}[1]	Transmit Serial Clock Width	38.5		ns

[1] Serial clock frequency is 64 × frame sync where FS = the frequency of LRCLK.

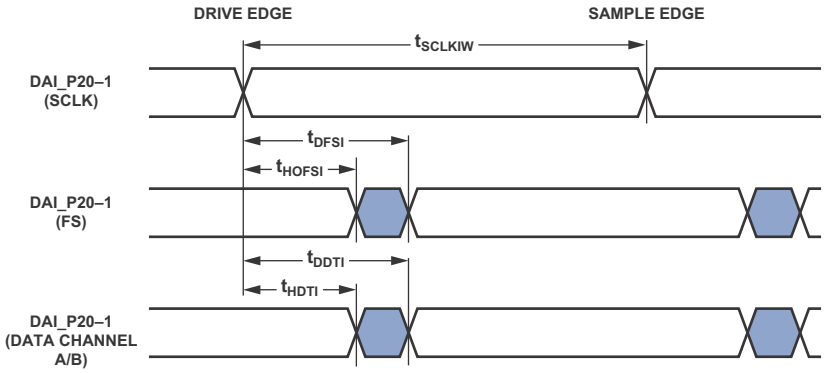

Figure 35. S/PDIF Receiver Internal Digital PLL Mode Timing

SPI Interface—Master

Both the primary and secondary SPIs are available through DPI only. The timing provided in Table 49 and Table 50 applies to both.

Table 49. SPI Interface Protocol—Master Switching and Timing Specifications

Parameter		Min	Max	Unit
Timing Requirements				
t_{SSPIDM}	Data Input Valid to SPICLK Edge (Data Input Setup Time)	8.6		ns
t_{HSPIDM}	SPICLK Last Sampling Edge to Data Input Not Valid	2		ns
Switching Characteristics				
$t_{SPICLKM}$	Serial Clock Cycle	$8 \times t_{PCLK} - 2$		ns
t_{SPICHM}	Serial Clock High Period	$4 \times t_{PCLK} - 2$		ns
t_{SPICLM}	Serial Clock Low Period	$4 \times t_{PCLK} - 2$		ns
$t_{DDSPIDM}$	SPICLK Edge to Data Out Valid (Data Out Delay time)		2.5	
$t_{HDSPIDM}$	SPICLK Edge to Data Out Not Valid (Data Out Hold time)	$4 \times t_{PCLK} - 2$		ns
t_{SDSCIM}	DPI Pin (SPI Device Select) Low to First SPICLK Edge	$4 \times t_{PCLK} - 2$		ns
t_{HDSM}	Last SPICLK Edge to DPI Pin (SPI Device Select) High	$4 \times t_{PCLK} - 2$		ns
t_{SPITDM}	Sequential Transfer Delay	$4 \times t_{PCLK} - 1.4$		ns

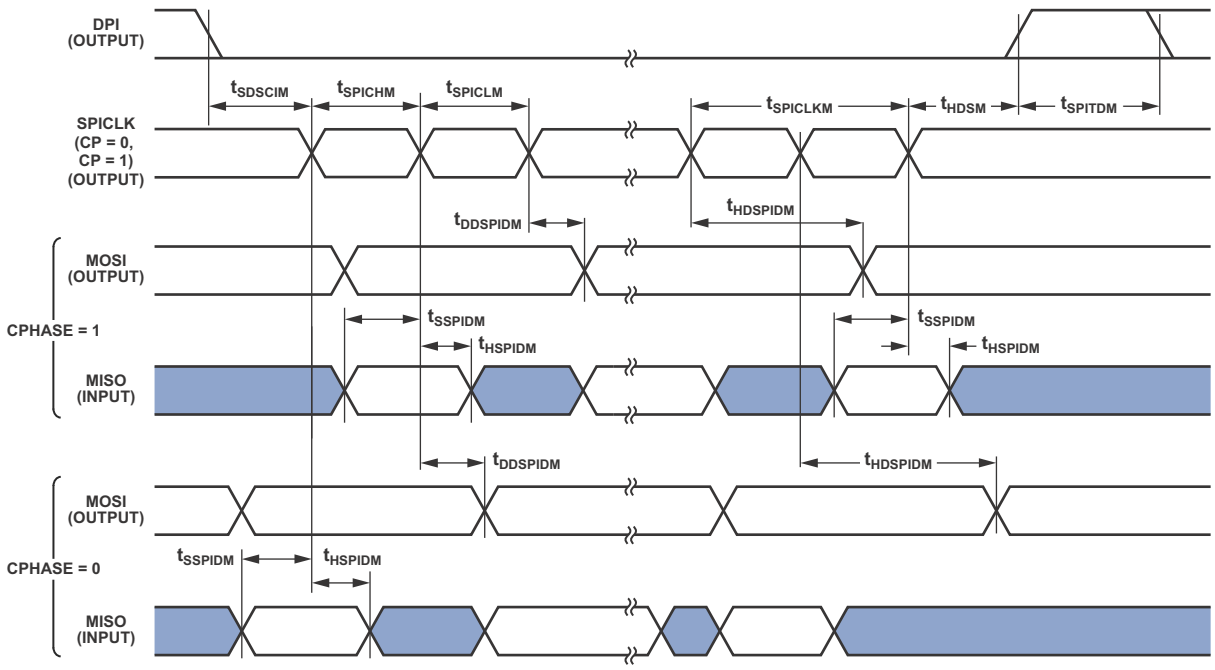

Figure 36. SPI Master Timing

SPI Interface—Slave

Table 50. SPI Interface Protocol—Slave Switching and Timing Specifications

Parameter		Min	Max	Unit
Timing Requirements				
$t_{SPICLKS}$	Serial Clock Cycle	$4 \times t_{PCLK} - 2$		ns
t_{SPICHS}	Serial Clock High Period	$2 \times t_{PCLK} - 2$		ns
t_{SPICLS}	Serial Clock Low Period	$2 \times t_{PCLK} - 2$		ns
t_{SDSCO}	$\overline{SPIDS}$ Assertion to First SPICLK Edge, CPHASE = 0 or CPHASE = 1	$2 \times t_{PCLK}$		ns
t_{HDS}	Last SPICLK Edge to $\overline{SPIDS}$ Not Asserted, CPHASE = 0	$2 \times t_{PCLK}$		ns
t_{SSPIDS}	Data Input Valid to SPICLK Edge (Data Input Setup Time)	2		ns
t_{HSPIDS}	SPICLK Last Sampling Edge to Data Input Not Valid	2		ns
t_{SDPPW}	$\overline{SPIDS}$ Deassertion Pulse Width (CPHASE = 0)	$2 \times t_{PCLK}$		ns
Switching Characteristics				
t_{DSOE}	$\overline{SPIDS}$ Assertion to Data Out Active	0	10.25	ns
t_{DSOE}[1]	$\overline{SPIDS}$ Assertion to Data Out Active (SPI2)	0	10.25	ns
t_{DSDHI}	$\overline{SPIDS}$ Deassertion to Data High Impedance	0	13.25	ns
t_{DSDHI}[1]	$\overline{SPIDS}$ Deassertion to Data High Impedance (SPI2)	0	13.25	ns
$t_{DDSPIDS}$	SPICLK Edge to Data Out Valid (Data Out Delay Time)		11.5	ns
$t_{HDSPIDS}$	SPICLK Edge to Data Out Not Valid (Data Out Hold Time)	$2 \times t_{PCLK}$		ns
t_{DSOV}	$\overline{SPIDS}$ Assertion to Data Out Valid (CPHASE = 0)		$5 \times t_{PCLK}$	ns

[1] The timing for these parameters applies when the SPI is routed through the signal routing unit. For more information, see the processor hardware reference, "Serial Peripheral Interface Port" chapter.

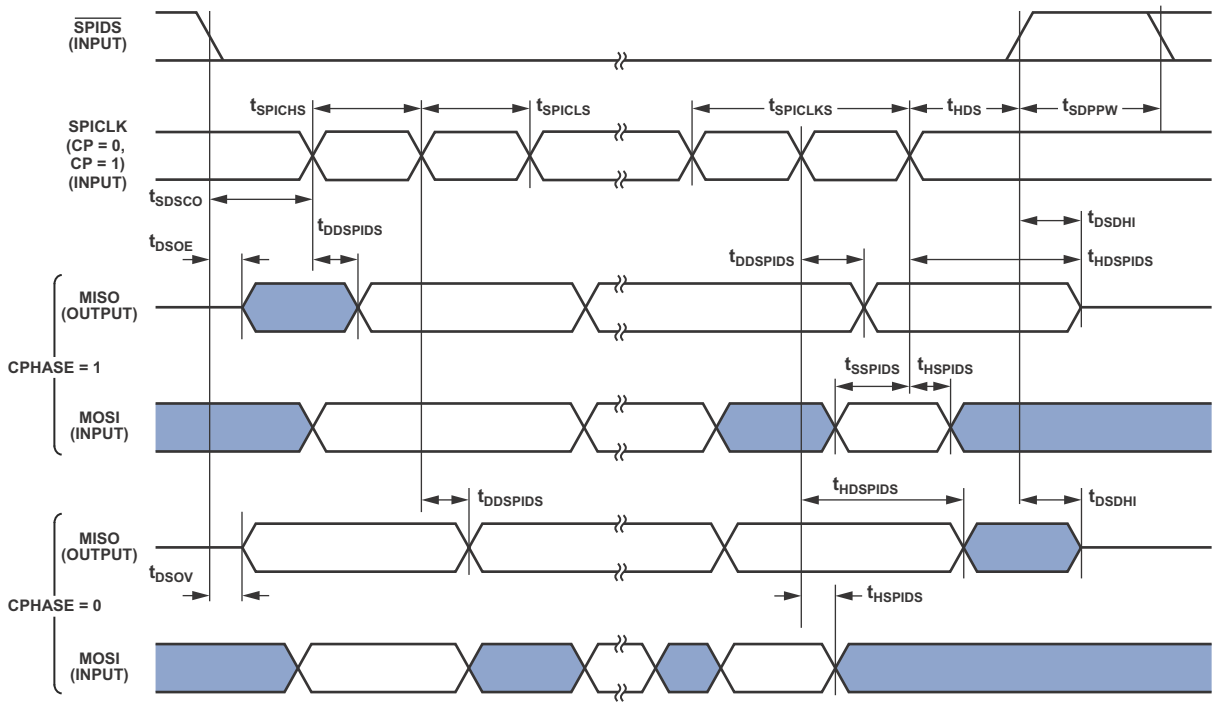

Figure 37. SPI Slave Timing

Media Local Bus

All the numbers given are applicable for all speed modes (1024 FS, 512 FS, and 256 FS for 3-pin; 512 FS and 256 FS for 5-pin) unless otherwise specified. Please refer to MediaLB specification document rev 3.0 for more details.

Table 51. MLB Interface, 3-Pin Specifications

Parameter		Min	Typ	Max	Unit
3-Pin Characteristics					
t_{MLBCLK}	MLB Clock Period				
	1024 FS		20.3		ns
	512 FS		40		ns
	256 FS		81		ns
t_{MCKL}	MLBCLK Low Time				
	1024 FS	6.1			ns
	512 FS	14			ns
	256 FS	30			ns
t_{MCKH}	MLBCLK High Time				
	1024 FS	9.3			ns
	512 FS	14			ns
	256 FS	30			ns
t_{MCKR}	MLBCLK Rise Time (V_{IL} to V_{IH})				
	1024 FS			1	ns
	512 FS/256 FS			3	ns
t_{MCKF}	MLBCLK Fall Time (V_{IH} to V_{IL})				
	1024 FS			1	ns
	512 FS/256 FS			3	ns
t_{MPWV}[1]	MLBCLK Pulse Width Variation				
	1024 FS			0.7	ns p-p
	512 FS/256			2.0	ns p-p
t_{DSMCF}	DAT/SIG Input Setup Time	1			ns
t_{DHMCF}	DAT/SIG Input Hold Time	1.2			ns
t_{MCFDZ}	DAT/SIG Output Time to Three-State	0		15	ns
t_{MCDRV}	DAT/SIG Output Data Delay From MLBCLK Rising Edge			8	ns
t_{MDZH}[2]	Bus Hold Time				
	1024 FS	2			ns
	512 FS/256	4			ns
C_{MLB}	DAT/SIG Pin Load				
	1024 FS			40	pf
	512 FS/256			60	pf

[1] Pulse width variation is measured at 1.25 V by triggering on one edge of MLBCLK and measuring the spread on the other edge, measured in ns peak-to-peak (p-p).
[2] The board must be designed to ensure that the high-impedance bus does not leave the logic state of the final driven bit for this time period. Therefore, coupling must be minimized while meeting the maximum capacitive load listed.

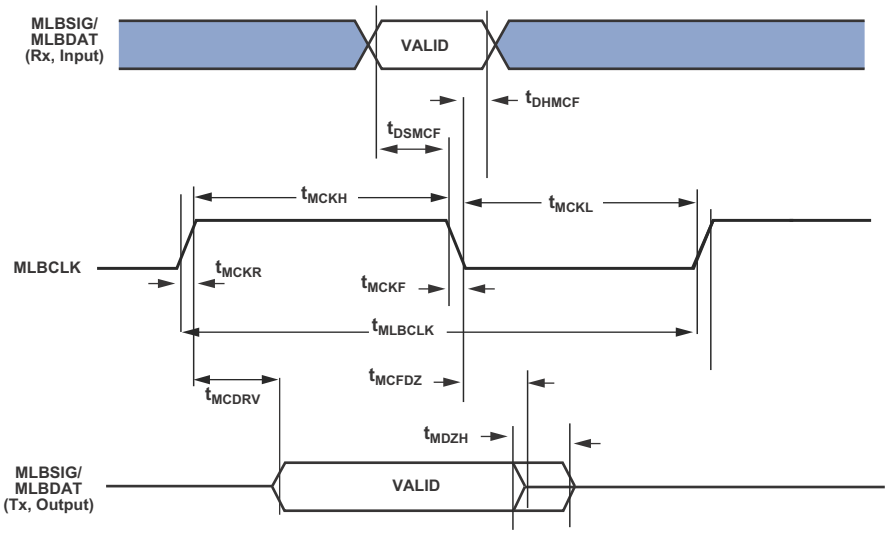

Figure 38. MLB Timing (3-Pin Interface)

Table 52. MLB Interface, 5-Pin Specifications

Parameter		Min	Typ	Max	Unit
5-Pin Characteristics					
t_{MLBCLK}	MLB Clock Period				
	512 FS		40		ns
	256 FS		81		ns
t_{MCKL}	MLBCLK Low Time				
	512 FS	15			ns
	256 FS	30			ns
t_{MCKH}	MLBCLK High Time				
	512 FS	15			ns
	256 FS	30			ns
t_{MCKR}	MLBCLK Rise Time (V_{IL} to V_{IH})			6	ns
t_{MCKF}	MLBCLK Fall Time (V_{IH} to V_{IL})			6	ns
t_{MPWV}[1]	MLBCLK Pulse Width Variation			2	ns p-p
t_{DSMCF}[2]	DAT/SIG Input Setup Time	3			ns
t_{DHMCF}	DAT/SIG Input Hold Time	5			ns
t_{MCDRV}	DS/DO Output Data Delay From MLBCLK Rising Edge			8	ns
t_{MCRDL}[3]	DO/SO Low From MLBCLK High				
	512 FS			10	ns
	256 FS			20	ns
C_{mlb}	DS/DO Pin Load			40	pf

[1] Pulse width variation is measured at 1.25 V by triggering on one edge of MLBCLK and measuring the spread on the other edge, measured in ns peak-to-peak (p-p).
[2] Gate delays due to OR'ing logic on the pins must be accounted for.
[3] When a node is not driving valid data onto the bus, the MLBSO and MLBDO output lines shall remain low. If the output lines can float at anytime, including while in reset, external pull-down resistors are required to keep the outputs from corrupting the MediaLB signal lines when not being driven.

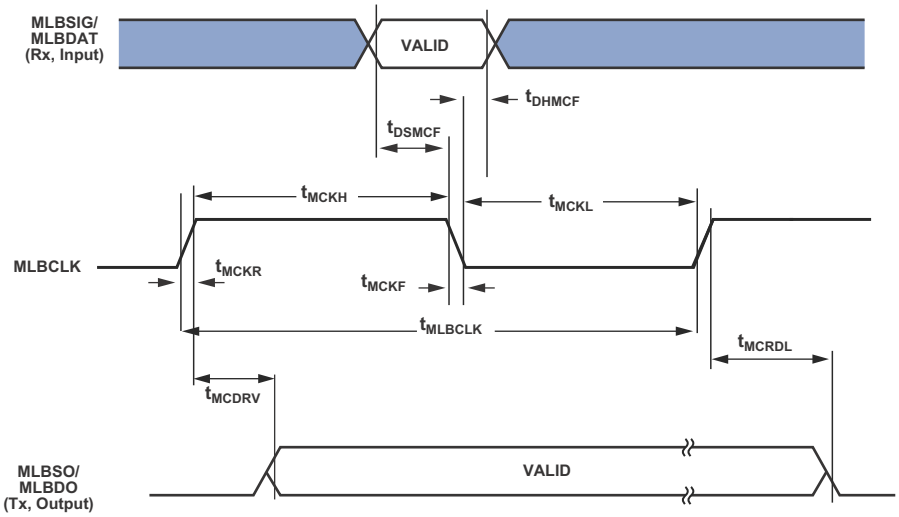

Figure 39. MLB Timing (5-Pin Interface)

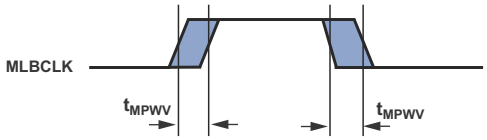

Figure 40. MLB 3-Pin and 5-Pin MLBCLK Pulse Width Variation Timing

Shift Register

Table 53. Shift Register

Parameter		Min	Max	Unit
Timing Requirements				
t_{SSDI}	SR_SDI Setup Before SR_SCLK Rising Edge	7		ns
t_{HSDI}	SR_SDI Hold After SR_SCLK Rising Edge	2		ns
$t_{SSDIDAI}$[1]	DAI_P08–01 (SR_SDI) Setup Before DAI_P08–01 (SR_SCLK) Rising Edge	7		ns
$t_{HSDIDAI}$[1]	DAI_P08–01 (SR_SDI) Hold After DAI_P08–01 (SR_SCLK) Rising Edge	2		ns
$t_{SSCK2LCK}$[2]	SR_SCLK to SR_LAT Setup	2		ns
$t_{SSCK2LCKDAI}$[1, 2]	DAI_P08–01 (SR_SCLK) to DAI_P08–01 (SR_LAT) Setup	2		ns
$t_{CLRREM2SCK}$	Removal Time $\overline{SR_CLR}$ to SR_SDCLK	$3 \times t_{PCLK} - 5$		ns
$t_{CLRREM2LCK}$	Removal Time $\overline{SR_CLR}$ to SR_LAT	$2 \times t_{PCLK} - 5$		ns
t_{CLRW}	$\overline{SR_CLR}$ Pulse Width	$4 \times t_{PCLK} - 5$		ns
t_{SCKW}	SR_SDCLK Clock Pulse Width	$2 \times t_{PCLK} - 2$		ns
t_{LCKW}	SR_LAT Clock Pulse Width	$2 \times t_{PCLK} - 5$		ns
f_{MAX}	Maximum Clock Frequency SR_SDCLK or SR_LAT		$f_{CCLK} \div 8$	MHz
Switching Characteristics				ns
t_{DSDO1}[3]	SR_SDO Hold After SR_SCLK Rising Edge	3		ns
t_{DSDO2}[3]	SR_SDO Max. Delay After SR_SCLK Rising Edge		13	ns
$t_{DSDODAI1}$[1, 3]	SR_SDO Hold After DAI_P08–01 (SR_SCLK) Rising Edge	3		ns
$t_{DSDODAI2}$[1, 3]	SR_SDO Max. Delay After DAI_P08–01 (SR_SCLK) Rising Edge		13	ns
$t_{DSDOSP1}$[3, 4]	SR_SDO Hold After DAI_P20–01 (SR_SCLK) Rising Edge	–2		ns
$t_{DSDOSP2}$[3, 4]	SR_SDO Max. Delay After DAI_P20–01 (SR_SCLK) Rising Edge		5	ns
$t_{DSDOPCG1}$[3, 5, 6]	SR_SDO Hold After DAI_P20–01 (SR_SCLK) Rising Edge	–2		ns
$t_{DSDOPCG2}$[3, 5, 6]	SR_SDO Max. Delay After DAI_P20–01 (SR_SCLK) Rising Edge		5	ns
$t_{DSDOCLR1}$[3]	$\overline{SR_CLR}$ to SR_SDO Min. Delay	4		ns
$t_{DSDOCLR2}$[3]	$\overline{SR_CLR}$ to SR_SDO Max. Delay		13	ns
t_{DLDO1}[3]	SR_LDO Hold After SR_LAT Rising Edge	3		ns
t_{DLDO2}[3]	SR_LDO Max. Delay After SR_LAT Rising Edge		13	ns
$t_{DLDODAI1}$[3]	SR_LDO Hold After DAI_P08–01 (SR_LAT) Rising Edge	3		ns
$t_{DLDODAI2}$[3]	SR_LDO Max. Delay After DAI_P08–01 (SR_LAT) Rising Edge		13	ns
$t_{DLDOSP1}$[3, 4]	SR_LDO Hold After DAI_P20–01 (SR_LAT) Rising Edge	–2		ns
$t_{DLDOSP2}$[3, 4]	SR_LDO Max. Delay After DAI_P20–01 (SR_LAT) Rising Edge		5	ns
$t_{DLDOPCG1}$[3, 5, 6]	SR_LDO Hold After DAI_P20–01 (SR_LAT) Rising Edge	–2		ns
$t_{DLDOPCG2}$[3, 5, 6]	SR_LDO Max. Delay After DAI_P20–01 (SR_LAT) Rising Edge		5	ns
$t_{DLDOCLR1}$[3]	$\overline{SR_CLR}$ to SR_LDO Min. Delay	4		ns
$t_{DLDOCLR2}$[3]	$\overline{SR_CLR}$ to SR_LDO Max. Delay		14	ns

[1] Any of the DAI_P08-01 pins can be routed to the shift register clock, latch clock and serial data input via the SRU.
[2] Both clocks can be connected to the same clock source. If both clocks are connected to same clock source, then data in the 18-stage shift register is always one cycle ahead of latch register data.
[3] For setup/hold timing requirements of off-chip shift register interfacing devices.
[4] SPORTx serial clock out, frame sync out, and serial data outputs are routed to shift register block internally and are also routed onto DAI_P20–01.
[5] PCG serial clock output is routed to SPORT and shift register block internally and are also routed onto DAI_P20–01. The SPORTs generate SR_LAT and SDI internally.
[6] PCG Serial clock and frame sync outputs are routed to SPORT and shift register block internally and are also routed onto DAI_P20–01. The SPORTs generate SDI internally.

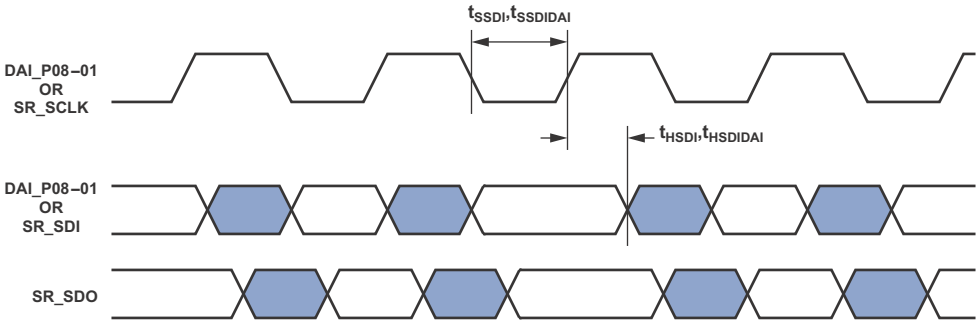

Figure 41. SR_SDI Setup, Hold

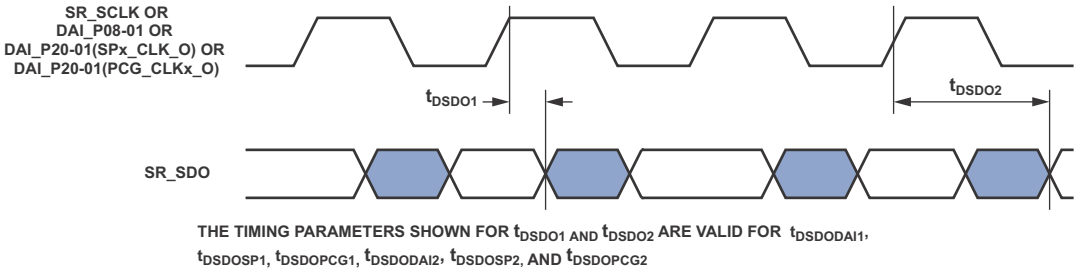

Figure 42. SR_ SDO Delay

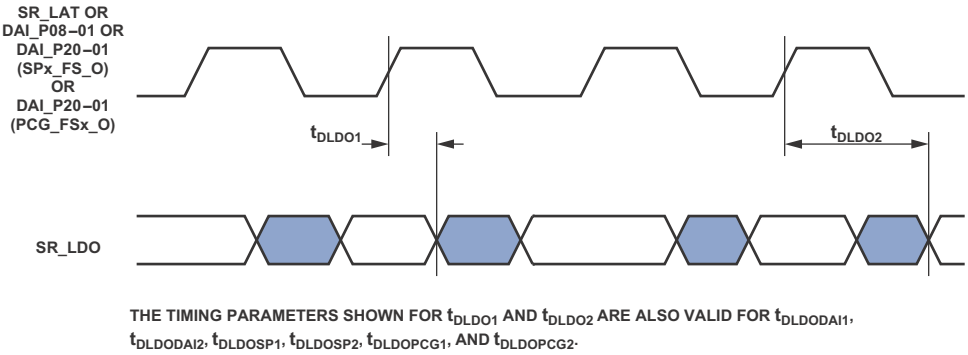

Figure 43. SR_LDO Delay

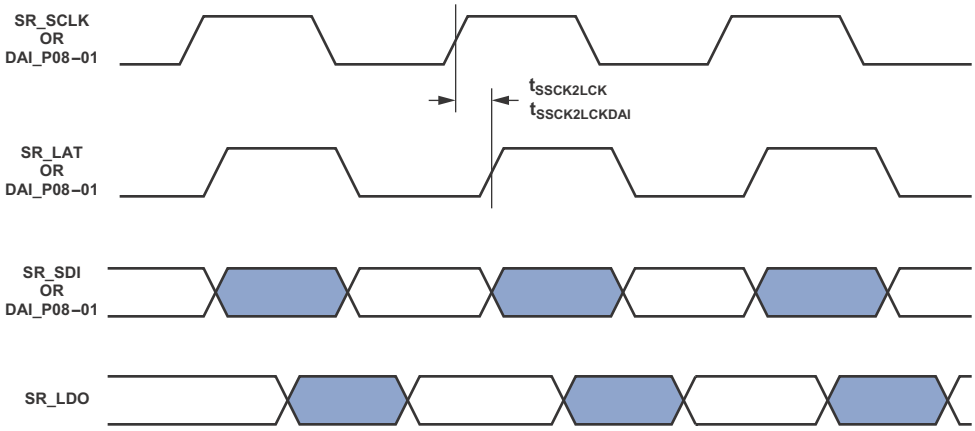

Figure 44. SR_SDCLK to SR_LAT Setup, Clocks Pulse Width and Maximum Frequency

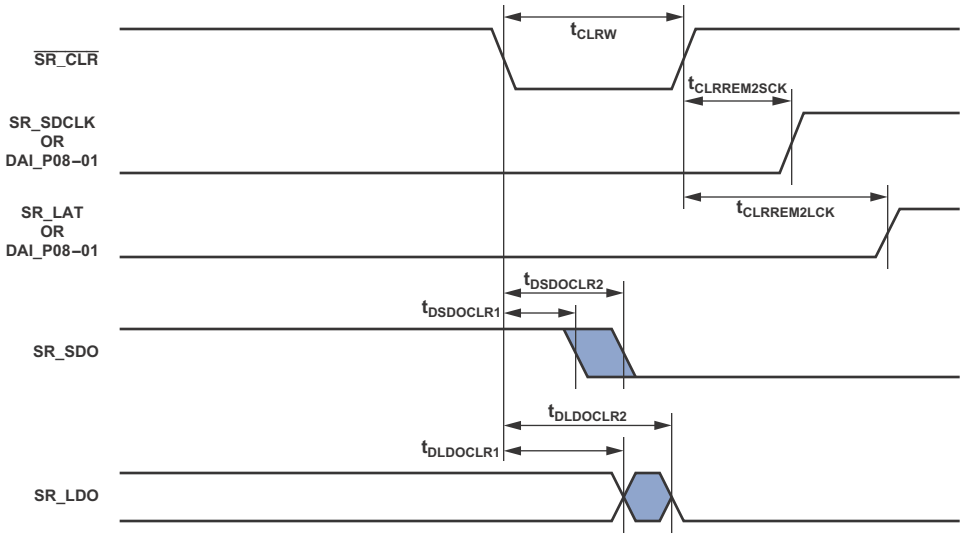

Figure 45. Shift Register Reset Timing

Universal Asynchronous Receiver-Transmitter (UART) Ports—Receive and Transmit Timing

For information on the UART port receive and transmit operations, see the *ADSP-214xx SHARC Hardware Reference Manual*.

2-Wire Interface (TWI)—Receive and Transmit Timing

For information on the TWI receive and transmit operations, see the *ADSP-214xx SHARC Hardware Reference Manual*.

JTAG Test Access Port and Emulation

Table 54. JTAG Test Access Port and Emulation

Parameter		Min	Max	Unit
Timing Requirements				
t_{TCK}	TCK Period	20		ns
t_{STAP}	TDI, TMS Setup Before TCK High	5		ns
t_{HTAP}	TDI, TMS Hold After TCK High	6		ns
t_{SSYS}[1]	System Inputs Setup Before TCK High	7		ns
t_{HSYS}[1]	System Inputs Hold After TCK High	18		ns
t_{TRSTW}	$\overline{TRST}$ Pulse Width	$4 \times t_{CK}$		ns
Switching Characteristics				
t_{DTDO}	TDO Delay from TCK Low		10.5	ns
t_{DSYS}[2]	System Outputs Delay After TCK Low		$t_{CK} \div 2 + 7$	ns

[1] System Inputs = DATA15–0, CLK_CFG1–0, $\overline{RESET}$, BOOT_CFG1–0, DAI_Px, DPI_Px, FLAG3–0, MLBCLK, MLBDAT, MLBSIG, SR_SCLK, $\overline{SR_CLR}$, SR_SDI, and SR_LAT.

[2] System Outputs = DAI_Px, DPI_Px, ADDR23–0, $\overline{AMI_RD}$, $\overline{AMI_WR}$, FLAG3–0, $\overline{SDRAS}$, $\overline{SDCAS}$, $\overline{SDWE}$, SDCKE, SDA10, SDDQM, SDCLK, MLBDAT, MLBSIG, MLBDO, MLBSO, SR_SDO, SR_LDO and $\overline{EMU}$.

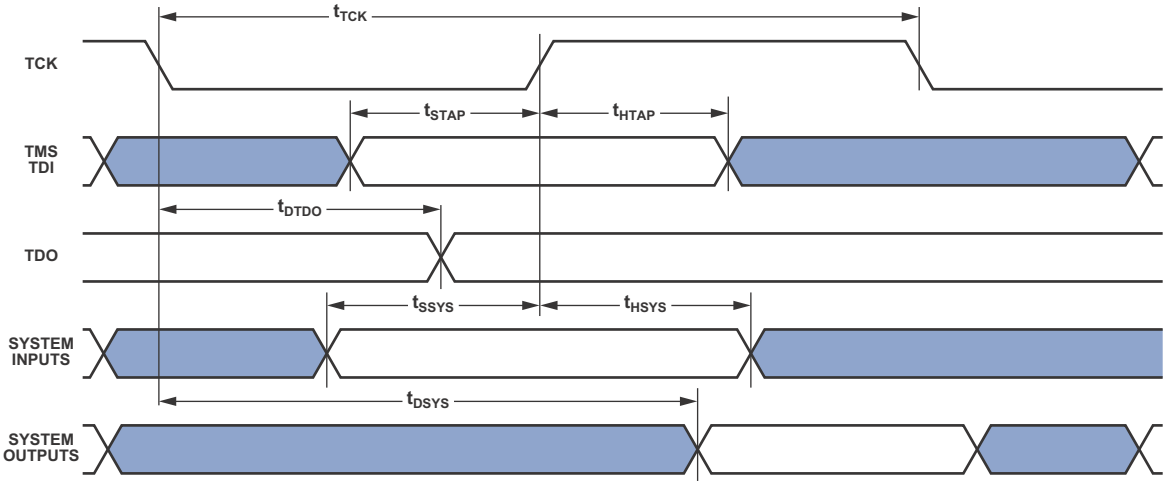

Figure 46. IEEE 1149.1 JTAG Test Access Port

OUTPUT DRIVE CURRENTS

Table 55 shows the driver types and the pins associated with each driver. Figure 47 shows typical I-V characteristics for each driver. The curves represent the current drive capability of the output drivers as a function of output voltage.

Table 55. Driver Types

Driver Type	Associated Pins
A	FLAG[0–3], AMI_ADDR[23–0], DATA[15–0], $\overline{\text{AMI_RD}}$, $\overline{\text{AMI_WR}}$, AMI_ACK, $\overline{\text{MS[1-0]}}$, $\overline{\text{SDRAS}}$, $\overline{\text{SDCAS}}$, $\overline{\text{SDWE}}$, SDDQM, SDCKE, SDA10, $\overline{\text{EMU}}$, TDO, $\overline{\text{RESETOUT}}$, DPI[1–14], DAI[1–20], $\overline{\text{WDTRSTO}}$, MLBDAT, MLBSIG, MLBSO, MLBDO, MLBCLK, $\overline{\text{SR_CLR}}$, SR_LAT, SR_LDO[17–0], SR_SCLK, SR_SDI
B	SDCLK, RTCLKOUT

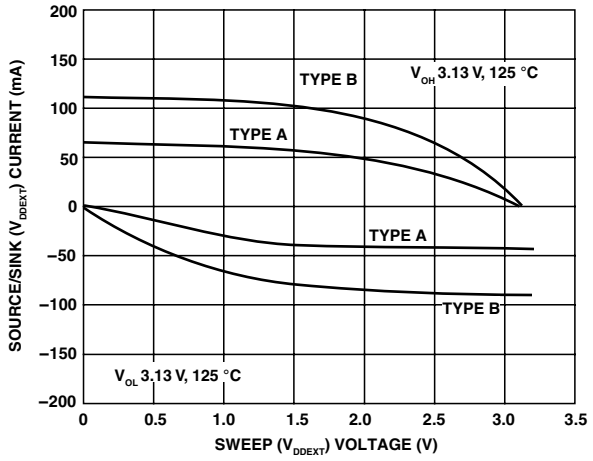

Figure 47. Typical Drive at Junction Temperature

TEST CONDITIONS

The ac signal specifications (timing parameters) appear in Table 20 on Page 26 through Table 54 on Page 60. These include output disable time, output enable time, and capacitive loading. The timing specifications for the SHARC apply for the voltage reference levels in Figure 48.

Timing is measured on signals when they cross the 1.5 V level as described in Figure 49. All delays (in nanoseconds) are measured between the point that the first signal reaches 1.5 V and the point that the second signal reaches 1.5 V.

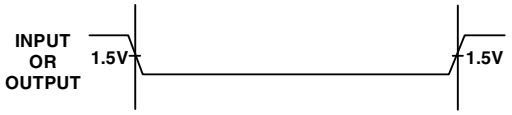

Figure 49. Voltage Reference Levels for AC Measurements

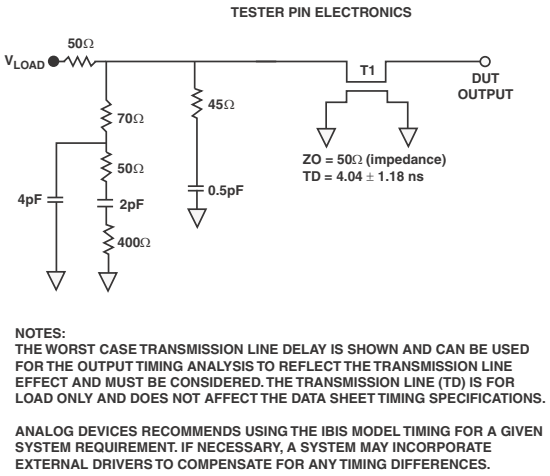

Figure 48. Equivalent Device Loading for AC Measurements (Includes All Fixtures)

CAPACITIVE LOADING

Output delays and holds are based on standard capacitive loads: 30 pF on all pins (see Figure 48). Figure 52 shows graphically how output delays and holds vary with load capacitance. The graphs of Figure 50, Figure 51, and Figure 52 may not be linear outside the ranges shown for Typical Output Delay vs. Load Capacitance and Typical Output Rise Time (20% to 80%, V = Min) vs. Load Capacitance.

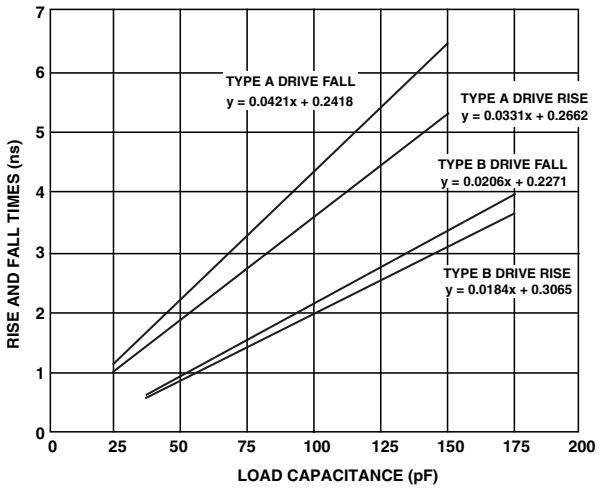

Figure 50. Typical Output Rise/Fall Time (20% to 80%, V_{DD_EXT} = Max)

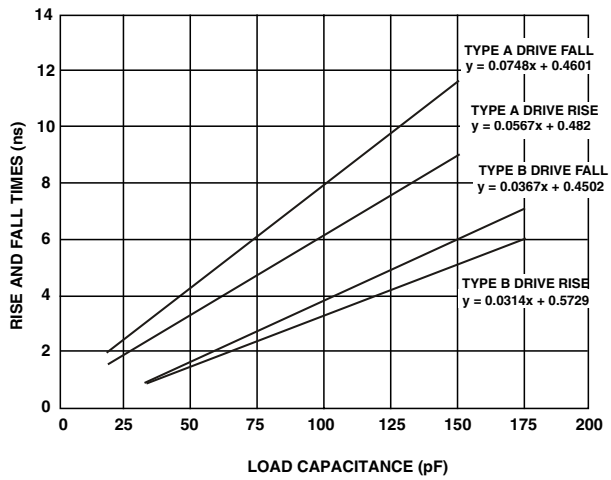

Figure 51. Typical Output Rise/Fall Time (20% to 80%, V_{DD_EXT} = Min)

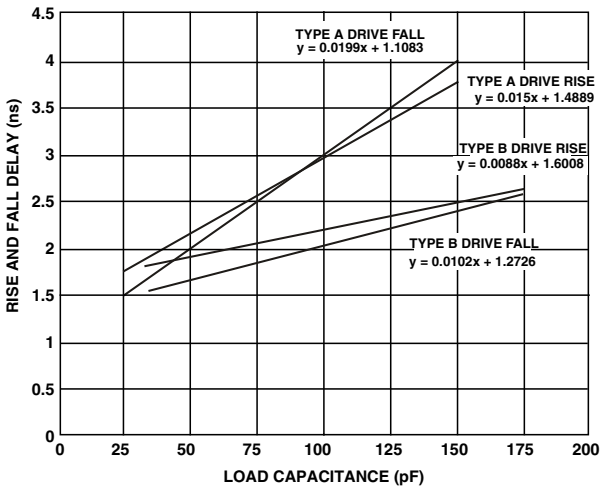

Figure 52. Typical Output Delay or Hold vs. Load Capacitance (at Ambient Temperature)

THERMAL CHARACTERISTICS

The processor is rated for performance over the temperature range specified in Operating Conditions on Page 19.

Table 56 airflow measurements comply with JEDEC standards JESD51-2 and JESD51-6 and the junction-to-board measurement complies with JESD51-8. Test board design complies with JEDEC standards JESD51-7 (PBGA). The junction-to-case measurement complies with MIL- STD-883. All measurements use a 2S2P JEDEC test board.

To determine the junction temperature of the device while on the application PCB, use:

$$T_J = T_{CASE} + (\Psi_{JT} \times P_D)$$

where:

T_J = junction temperature °C

T_{CASE} = case temperature (°C) measured at the top center of the package

Ψ_{JT} = junction-to-top (of package) characterization parameter is the Typical value from Table 56.

P_D = power dissipation

Values of θ_{JA} are provided for package comparison and PCB design considerations. θ_{JA} can be used for a first order approximation of T_J by the equation:

$$T_J = T_A + (\theta_{JA} \times P_D)$$

where:

T_A = ambient temperature °C

Values of θ_{JC} are provided for package comparison and PCB design considerations when an external heatsink is required.

Values of θ_{JB} are provided for package comparison and PCB design considerations. Note that the thermal characteristics values provided in Table 56 are modeled values.

Table 56. Thermal Characteristics for 100-Lead LQFP_EP

Parameter	Condition	Typical	Unit
θ_{JA}	Airflow = 0 m/s	18.1	°C/W
θ_{JMA}	Airflow = 1 m/s	15.5	°C/W
θ_{JMA}	Airflow = 2 m/s	14.6	°C/W
θ_{JC}		2.4	°C/W
Ψ_{JT}	Airflow = 0 m/s	0.22	°C/W
Ψ_{JMT}	Airflow = 1 m/s	0.36	°C/W
Ψ_{JMT}	Airflow = 2 m/s	0.50	°C/W

Table 57. Thermal Characteristics for 196-Ball CSP_BGA

Parameter	Condition	Typical	Unit
θ_{JA}	Airflow = 0 m/s	29.0	°C/W
θ_{JMA}	Airflow = 1 m/s	26.1	°C/W
θ_{JMA}	Airflow = 2 m/s	25.1	°C/W
θ_{JC}		8.8	°C/W
Ψ_{JT}	Airflow = 0 m/s	0.23	°C/W
Ψ_{JMT}	Airflow = 1 m/s	0.42	°C/W
Ψ_{JMT}	Airflow = 2 m/s	0.52	°C/W

Thermal Diode

The processors incorporate thermal diode/s to monitor the die temperature. The thermal diode is a grounded collector, PNP bipolar junction transistor (BJT). The THD_P pin is connected to the emitter and the THD_M pin is connected to the base of the transistor. These pins can be used by an external temperature sensor (such as ADM 1021A or LM86 or others) to read the die temperature of the chip.

The technique used by the external temperature sensor is to measure the change in VBE when the thermal diode is operated at two different currents. This is shown in the following equation:

$$\Delta V_{BE} = n \times \frac{kT}{q} \times ln(N)$$

where:

n = multiplication factor close to 1, depending on process variations

k = Boltzmann constant

T = temperature (°C)

q = charge of the electron

N = ratio of the two currents

The two currents are usually in the range of 10 µA to 300 µA for the common temperature sensor chips available.

Table 58 contains the thermal diode specifications using the transistor model.

Table 58. Thermal Diode Parameters—Transistor Model[1]

Symbol	Parameter	Min	Typ	Max	Unit
I_{FW}[2]	Forward Bias Current	10		300	µA
I_E	Emitter Current	10		300	µA
n_Q[3, 4]	Transistor Ideality	1.012	1.015	1.017	
R_T[3, 5]	Series Resistance	0.12	0.2	0.28	Ω

[1] Analog Devices does not recommend operation of the thermal diode under reverse bias.
[2] Analog Devices does not recommend operation of the thermal diode under reverse bias.
[3] Specified by design characterization.
[4] The ideality factor, nQ, represents the deviation from ideal diode behavior as exemplified by the diode equation: $I_C = I_S \times (e^{qVBE/nqkT} - 1)$ where I_S = saturation current, q = electronic charge, V_{BE} = voltage across the diode, k = Boltzmann constant, and T = absolute temperature (Kelvin).
[5] The series resistance (R_T) can be used for more accurate readings as needed.

100-LQFP_EP LEAD ASSIGNMENT

Table 59 lists the lead names and their default function after reset (in parentheses).

Table 59. 100-Lead LQFP_EP Lead Assignments (Numerical by Lead Number)

Lead Name	Lead No.	Lead Name	Lead No.	Lead Name	Lead No.	Lead Name	Lead No.
V_{DD_INT}	1	V_{DD_EXT}	26	DAI_P10	51	V_{DD_INT}	76
CLK_CFG1	2	DPI_P08	27	V_{DD_INT}	52	FLAG0	77
BOOT_CFG0	3	DPI_P07	28	V_{DD_EXT}	53	V_{DD_INT}	78
V_{DD_EXT}	4	V_{DD_INT}	29	DAI_P20	54	V_{DD_INT}	79
V_{DD_INT}	5	DPI_P09	30	V_{DD_INT}	55	FLAG1	80
BOOT_CFG1	6	DPI_P10	31	DAI_P08	56	FLAG2	81
GND	7	DPI_P11	32	DAI_P04	57	FLAG3	82
NC	8	DPI_P12	33	DAI_P14	58	MLBCLK	83
NC	9	DPI_P13	34	DAI_P18	59	MLBDAT	84
CLK_CFG0	10	DAI_P03	35	DAI_P17	60	MLBDO	85
V_{DD_INT}	11	DPI_P14	36	DAI_P16	61	V_{DD_EXT}	86
CLKIN	12	V_{DD_INT}	37	DAI_P15	62	MLBSIG	87
XTAL	13	V_{DD_INT}	38	DAI_P12	63	V_{DD_INT}	88
V_{DD_EXT}	14	V_{DD_INT}	39	V_{DD_INT}	64	MLBSO	89
V_{DD_INT}	15	DAI_P13	40	DAI_P11	65	$\overline{TRST}$	90
V_{DD_INT}	16	DAI_P07	41	V_{DD_INT}	66	$\overline{EMU}$	91
$\overline{RESETOUT}$/$\overline{RUNRSTIN}$	17	DAI_P19	42	V_{DD_INT}	67	TDO	92
V_{DD_INT}	18	DAI_P01	43	GND	68	V_{DD_EXT}	93
DPI_P01	19	DAI_P02	44	THD_M	69	V_{DD_INT}	94
DPI_P02	20	V_{DD_INT}	45	THD_P	70	TDI	95
DPI_P03	21	V_{DD_EXT}	46	V_{DD_THD}	71	TCK	96
V_{DD_INT}	22	V_{DD_INT}	47	V_{DD_INT}	72	V_{DD_INT}	97
DPI_P05	23	DAI_P06	48	V_{DD_INT}	73	$\overline{RESET}$	98
DPI_P04	24	DAI_P05	49	V_{DD_INT}	74	TMS	99
DPI_P06	25	DAI_P09	50	V_{DD_INT}	75	V_{DD_INT}	100
						GND	101*

* Lead no. 101 is the GND supply (see Figure 53 and Figure 54) for the processor; this pad must be **robustly** connected to GND.
MLB pins (pins 83, 84, 85, 87, and 89) are available for automotive models only. For non-automotive models, these pins should be connected to ground (GND).

Figure 53 shows the top view of the 100-lead LQFP_EP pin configuration. Figure 54 shows the bottom view of the 100-lead LQFP_EP lead configuration.

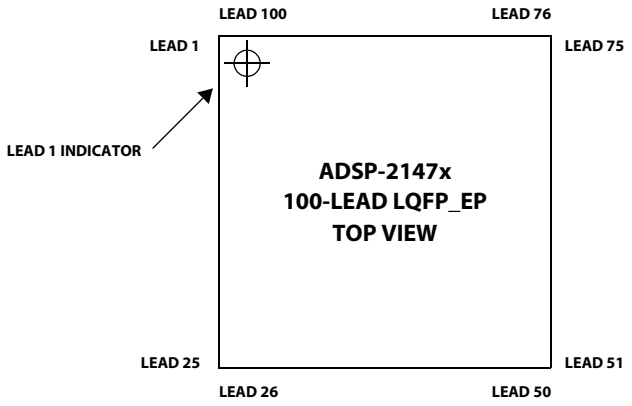

Figure 53. 100-Lead LQFP_EP Lead Configuration (Top View)

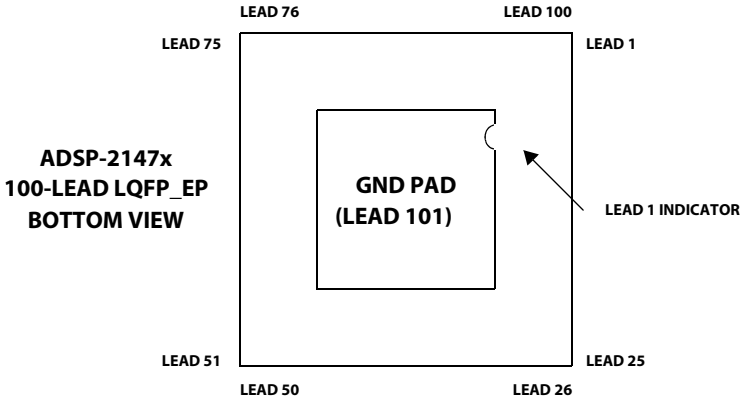

Figure 54. 100-Lead LQFP_EP Lead Configuration (Bottom View)

196-BALL BGA BALL ASSIGNMENT

Table 60. 196-Ball CSP_BGA Ball Assignment (Numerical by Ball No.)

Ball No.	Signal	Ball No.	Signal	Ball No.	Signal	Ball No.	Signal	Ball No.	Signal
A1	GND	D1	ADDR6	G1	XTAL	K1	DPI_P02	N1	DPI_P14
A2	SDCKE	D2	ADDR4	G2	SDA10	K2	DPI_P04	N2	SR_LDO1
A3	SDDQM	D3	ADDR1	G3	ADDR11	K3	DPI_P05	N3	SR_LDO4
A4	$\overline{\text{SDRAS}}$	D4	CLK_CFG0	G4	GND	K4	DPI_P09	N4	SR_LDO8
A5	$\overline{\text{SDWE}}$	D5	V_{DD_EXT}	G5	V_{DD_INT}	K5	V_{DD_INT}	N5	SR_LDO10
A6	DATA12	D6	V_{DD_EXT}	G6	GND	K6	GND	N6	DAI_P01
A7	DATA13	D7	V_{DD_EXT}	G7	GND	K7	GND	N7	SR_LDO9
A8	DATA10	D8	V_{DD_EXT}	G8	GND	K8	GND	N8	DAI_P02
A9	DATA9	D9	V_{DD_EXT}	G9	GND	K9	GND	N9	SR_LDO13
A10	DATA7	D10	V_{DD_EXT}	G10	V_{DD_INT}	K10	V_{DD_INT}	N10	SR_SCLK
A11	DATA3	D11	V_{DD_EXT}	G11	V_{DD_EXT}	K11	GND	N11	DAI_P09
A12	DATA1	D12	ADDR14	G12	ADDR21	K12	DAI_P16	N12	SR_SDI
A13	DATA2	D13	ADDR20	G13	ADDR19	K13	DAI_P18	N13	SR_LDO17
A14	GND	D14	WDT_CLKO	G14	RTXO	K14	DAI_P15	N14	DAI_P14
B1	ADDR0	E1	ADDR8	H1	ADDR13	L1	DAI_P03	P1	GND
B2	CLK_CFG1	E2	ADDR7	H2	ADDR12	L2	DPI_P10	P2	SR_LDO3
B3	BOOT_CFG0	E3	ADDR5	H3	ADDR10	L3	DPI_P08	P3	SR_LDO2
B4	TMS	E4	V_{DD_EXT}	H4	ADDR17	L4	DPI_P06	P4	SR_LDO6
B5	$\overline{\text{RESET}}$	E5	V_{DD_INT}	H5	V_{DD_INT}	L5	V_{DD_INT}	P5	$\overline{\text{WDTRSTO}}$
B6	DATA14	E6	V_{DD_INT}	H6	GND	L6	V_{DD_INT}	P6	DAI_P19
B7	DATA11	E7	V_{DD_INT}	H7	GND	L7	V_{DD_INT}	P7	DAI_P13
B8	DATA4	E8	V_{DD_INT}	H8	GND	L8	V_{DD_INT}	P8	SR_LDO11
B9	DATA8	E9	V_{DD_INT}	H9	GND	L9	V_{DD_INT}	P9	SR_LDO15
B10	DATA6	E10	V_{DD_INT}	H10	V_{DD_INT}	L10	V_{DD_INT}	P10	$\overline{\text{SR_CLR}}$
B11	DATA5	E11	V_{DD_EXT}	H11	V_{DD_EXT}	L11	DAI_P10	P11	SR_LAT
B12	$\overline{\text{TRST}}$	E12	$\overline{\text{AMI_RD}}$	H12	BOOT_CFG2	L12	DAI_P20	P12	SR_LDO14
B13	FLAG1	E13	ADDR22	H13	ADDR23	L13	DAI_P17	P13	SR_LDO12
B14	DATA0	E14	FLAG2	H14	RTXI	L14	DAI_P04	P14	GND
C1	ADDR2	F1	CLKIN	J1	DPI_P01	M1	DPI_P13		
C2	ADDR3	F2	ADDR9	J2	DPI_P03	M2	DPI_P12		
C3	RTCLKOUT	F3	BOOT_CFG1	J3	ADDR18	M3	SR_LDO0		
C4	$\overline{\text{MS0}}$	F4	NC	J4	$\overline{\text{RESETOUT}}/\overline{\text{RUNRSTIN}}$	M4	DPI_P07		
C5	$\overline{\text{SDCAS}}$	F5	NC	J5	V_{DD_INT}	M5	DPI_P11		
C6	DATA15	F6	GND	J6	GND	M6	SR_LDO5		
C7	TCK	F7	GND	J7	GND	M7	SR_LDO7		
C8	TDI	F8	GND	J8	GND	M8	DAI_P07		
C9	SDCLK	F9	GND	J9	GND	M9	SR_LDO16		
C10	$\overline{\text{EMU}}$	F10	V_{DD_INT}	J10	V_{SS_RTC}	M10	SR_SDO		
C11	TDO	F11	V_{DD_EXT}	J11	V_{DD_RTC}	M11	DAI_P06		
C12	FLAG3	F12	ADDR15	J12	DAI_P11	M12	DAI_P05		
C13	ADDR16	F13	FLAG0	J13	AMI_ACK	M13	DAI_P08		
C14	WDT_CLKIN	F14	$\overline{\text{AMI_WR}}$	J14	$\overline{\text{MS1}}$	M14	DAI_P12		

OUTLINE DIMENSIONS

The processors are available in 100-lead LQFP_EP and 196-ball CSP_BGA RoHS compliant packages. For package assignment by model, see Ordering Guide on Page 69.

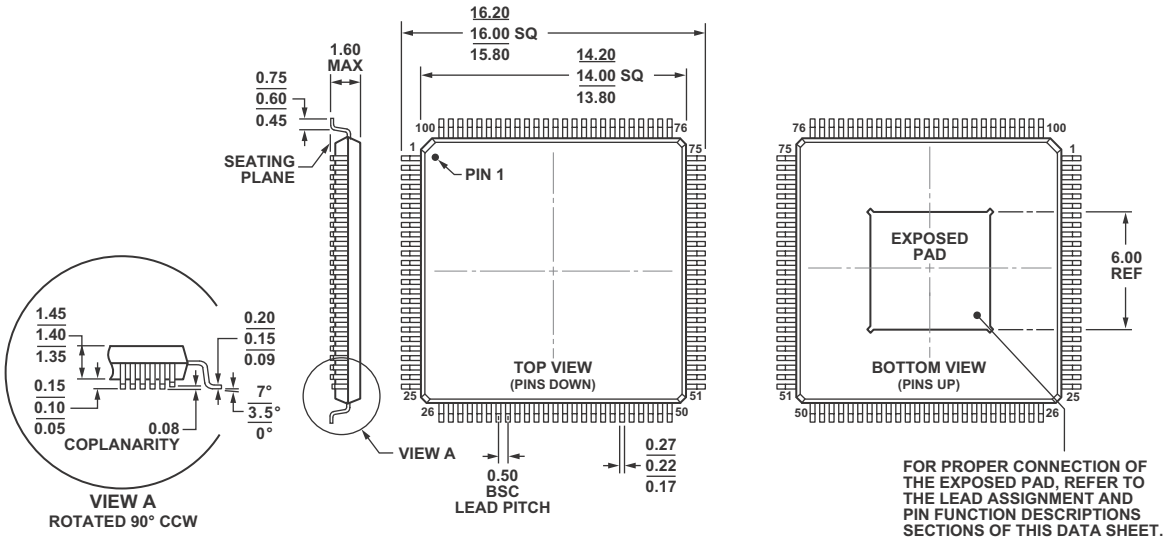

Figure 55. 100-Lead Low Profile Quad Flat Package, Exposed Pad [LQFP_EP[1]]
(SW-100-2)
Dimensions shown in millimeters

[1] For information relating to the SW-100-2 package's exposed pad, see the table endnote on Page 64.

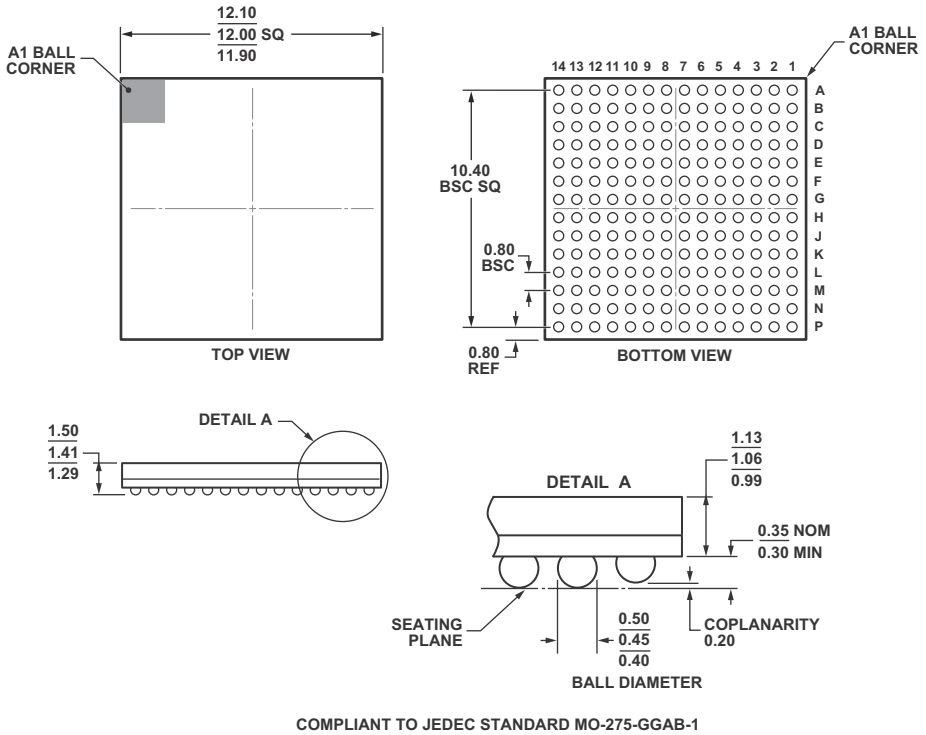

Figure 56. 196-Ball Chip Scale Package, Ball Grid Array [CSP_BGA] (BC-196-8)
Dimensions shown in millimeters

SURFACE-MOUNT DESIGN

For industry-standard design recommendations, refer to IPC-7351, Generic Requirements for Surface-Mount Design and Land Pattern Standard.

AUTOMOTIVE PRODUCTS

The ADSP-21478 and ADSP-21479 models are available with controlled manufacturing to support the quality and reliability requirements of automotive applications. Note that these automotive models may have specifications that differ from the commercial models, and designers should review the product Specifications section of this data sheet carefully. Only the automotive grade products shown in Table 61 are available for use in automotive applications. Contact your local ADI account representative for specific product ordering information and to obtain the specific Automotive Reliability reports for these models.

Table 61. Automotive Products

Model[1]	Temperature Range[2]	On-Chip SRAM	Processor Instruction Rate (Max)	Package Description	Package Option
AD21478WYSWZ2Axx	–40°C to +105°C	3 Mbit	266 MHz	100-Lead LQFP_EP	SW-100-2
AD21478WYSWZ2Bxx[3, 4]	–40°C to +105°C	3 Mbit	266 MHz	100-Lead LQFP_EP	SW-100-2
AD21479WYSWZ2Axx	–40°C to +105°C	5 Mbit	266 MHz	100-Lead LQFP_EP	SW-100-2
AD21479WYSWZ2Bxx[3, 4]	–40°C to +105°C	5 Mbit	266 MHz	100-Lead LQFP_EP	SW-100-2

[1] Z = RoHS compliant part.
[2] Referenced temperature is ambient temperature. The ambient temperature is not a specification. Please see Operating Conditions on Page 19 for junction temperature (T_J) specification, which is the only temperature specification.
[3] Contains multichannel audio decoders from Dolby and DTS.
[4] Contains Digital Transmission Content Protection (DTCP) from DTLA. User must have current license from DTLA to order this product.

ORDERING GUIDE

Model[1]	Temperature Range[2]	On-Chip SRAM	Processor Instruction Rate (Max)	Package Description	Package Option
ADSP-21478BBCZ-2A	–40°C to +85°C	3 Mbit	266 MHz	196-Ball CSP_BGA	BC-196-8
ADSP-21478BSWZ-2A	–40°C to +85°C	3 Mbit	266 MHz	100-Lead LQFP_EP	SW-100-2
ADSP-21478KBCZ-1A	0°C to +70°C	3 Mbit	200 MHz	196-Ball CSP_BGA	BC-196-8
ADSP-21478KBCZ-2A	0°C to +70°C	3 Mbit	266 MHz	196-Ball CSP_BGA	BC-196-8
ADSP-21478KBCZ-3A	0°C to +70°C	3 Mbit	300 MHz	196-Ball CSP_BGA	BC-196-8
ADSP-21478KSWZ-1A	0°C to +70°C	3 Mbit	200 MHz	100-Lead LQFP_EP	SW-100-2
ADSP-21478KSWZ-2A	0°C to +70°C	3 Mbit	266 MHz	100-Lead LQFP_EP	SW-100-2
ADSP-21479BBCZ-2A	–40°C to +85°C	5 Mbit	266 MHz	196-Ball CSP_BGA	BC-196-8
ADSP-21479BSWZ-2A	–40°C to +85°C	5 Mbit	266 MHz	100-Lead LQFP_EP	SW-100-2
ADSP-21479KBCZ-1A	0°C to +70°C	5 Mbit	200 MHz	196-Ball CSP_BGA	BC-196-8
ADSP-21479KBCZ-2A	0°C to +70°C	5 Mbit	266 MHz	196-Ball CSP_BGA	BC-196-8
ADSP-21479KBCZ-3A	0°C to +70°C	5 Mbit	300 MHz	196-Ball CSP_BGA	BC-196-8
ADSP-21479KSWZ-1A	0°C to +70°C	5 Mbit	200 MHz	100-Lead LQFP_EP	SW-100-2
ADSP-21479KSWZ-2A	0°C to +70°C	5 Mbit	266 MHz	100-Lead LQFP_EP	SW-100-2

[1] Z =RoHS compliant part.

[2] Referenced temperature is ambient temperature. The ambient temperature is not a specification. Please see Operating Conditions on Page 19 for junction temperature (T_J) specification, which is the only temperature specification.

©2011 Analog Devices, Inc. All rights reserved. Trademarks and registered trademarks are the property of their respective owners.
D09017-0-9/11(A)

www.analog.com

Мы молодая и активно развивающаяся компания в области поставок электронных компонентов. Мы поставляем электронные компоненты отечественного и импортного производства напрямую от производителей и с крупнейших складов мира.

Благодаря сотрудничеству с мировыми поставщиками мы осуществляем комплексные и плановые поставки широчайшего спектра электронных компонентов.

Собственная эффективная логистика и склад в обеспечивает надежную поставку продукции в точно указанные сроки по всей России.

Мы осуществляем техническую поддержку нашим клиентам и предпродажную проверку качества продукции. На все поставляемые продукты мы предоставляем гарантию .

Осуществляем поставки продукции под контролем ВП МО РФ на предприятия военно-промышленного комплекса России , а также работаем в рамках 275 ФЗ с открытием отдельных счетов в уполномоченном банке. Система менеджмента качества компании соответствует требованиям ГОСТ ISO 9001.

Минимальные сроки поставки, гибкие цены, неограниченный ассортимент и индивидуальный подход к клиентам являются основой для выстраивания долгосрочного и эффективного сотрудничества с предприятиями радиоэлектронной промышленности, предприятиями ВПК и научно-исследовательскими институтами России.

С нами вы становитесь еще успешнее!

Наши контакты:

Телефон: +7 812 627 14 35

Электронная почта: sales@st-electron.ru

Адрес: 198099, Санкт-Петербург, Промышленная ул, дом № 19, литера Н, помещение 100-Н Офис 331