MCP131X/2X

Voltage Supervisor

Features:

- Low Supply Current: 1 µA (Typical),10 µA (Max.)
- Precision Monitoring Trip Point Options:
  - 2.9V and 4.6V (Standard Offerings)
  - 2.0V to 4.7V in 100 mV Increments, (Contact the local Microchip Sales Office)
- Resets Microcontroller in a Power-loss Event
- Reset Delay Time-Out Option:
  - 1.4 ms, 30 ms, 200 ms, or 1.6s (Typical)
- Watchdog Timer Input Time-Out Options:
  - 6.3 ms, 102 ms, 1.6s, or 25.6s (Typical)
- Manual Reset ($\overline{MR}$) Input (Active-low)
- Single and Complementary Reset Output(s)
- Reset Output Options:
  - Push-Pull (Active-high or Active-low)
  - Open-Drain (Internal or External Pull-up)
- Temperature Range:
  - -40°C to +85°C for Trip Points 2.0 to 2.4V and,
  - -40°C to + 125°C for Trip Points > 2.5V
- Voltage Range: 1.0V to 5.5V
- Lead Free Packaging

Description:

The MCP131X/2X are voltage supervisor devices designed to keep a microcontroller in Reset until the system voltage has reached and stabilized at the proper level for reliable system operation. The table below shows the available features for these devices.

Package Types

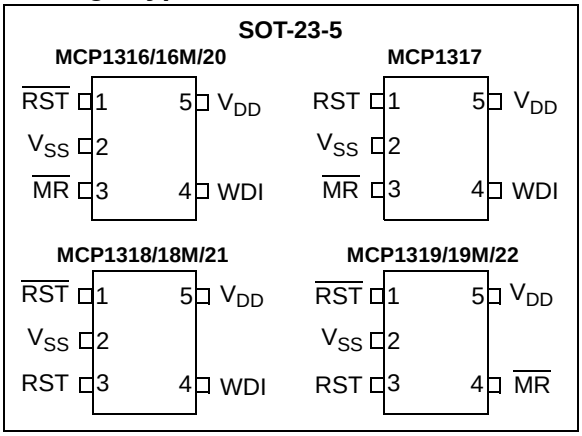

Block Diagram

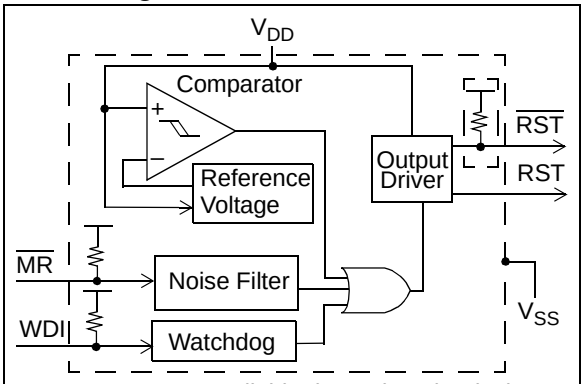

Note: Features available depend on the device.

Device Features

Device	Reset Output A			Reset Output B			WDI Input	$\overline{MR}$ Input
	Type	Pull-up Resistor	Active Level	Type	Pull-up Resistor	Active Level		
MCP1316	Push-Pull	—	Low	—	—	—	Yes	Yes
MCP1316M	Open-Drain	Internal	Low	—	—	—	Yes	Yes
MCP1317	Push-Pull	—	High	—	—	—	Yes	Yes
MCP1318	Push-Pull	—	Low	Push-Pull	—	High	Yes	No
MCP1318M	Open-Drain	Internal	Low	Push-Pull	—	High	Yes	No
MCP1319	Push-Pull	—	Low	Push-Pull	—	High	No	Yes
MCP1319M	Open-Drain	Internal	Low	Push-Pull	—	High	No	Yes
MCP1320	Open-Drain	External	Low	—	—	—	Yes	Yes
MCP1321	Open-Drain	External	Low	Push-Pull	—	High	Yes	No
MCP1322	Open-Drain	External	Low	Push-Pull	—	High	No	Yes

© 2005-2012 Microchip Technology Inc.

NOTES:

© 2005-2012 Microchip Technology Inc.

1.0 ELECTRICAL CHARACTERISTICS

Absolute Maximum Ratings†

Supply Voltage (V_{DD} to V_{SS}) 7.0V

Input current (V_{DD}) . . . . . .10 mA

Output current ($\overline{RST}$) . . . . . .10 mA

Voltage on all inputs and outputs, except Open-Drain $\overline{RST}$ (with no internal pull-up resistor), w.r.t. V_{SS} . .-0.6V to (V_{DD} + 1.0V)

Voltage on Open-Drain $\overline{RST}$
(with no internal pull-up resistor) w.r.t. V_{SS} . . -0.6V to 13.5V

Storage temperature . . . . . .-65°C to +150°C

Ambient temp. with power applied . . . . . .-40°C to +125°C

Maximum Junction temp. with power applied . . . . . .+150°C

Power Dissipation ($T_A \leq$ +70°C):
5-Pin SOT-23A .....240 mW
ESD protection on all pins .....≥ 4 kV

† **Notice:** Stresses above those listed under “Maximum Ratings” may cause permanent damage to the device. This is a stress rating only and functional operation of the device at those or any other conditions above those indicated in the operational listings of this specification is not implied. Exposure to maximum rating conditions for extended periods may affect device reliability.

DC CHARACTERISTICS

Electrical Specifications: Unless otherwise indicated, all limits are specified for V_{DD} = 1V to 5.5V, R_{PU} = 100 kΩ (only **MCP1320**, **MCP1321** and **MCP1322**), T_A = -40°C to +125°C.

Parameters	Sym	Min	Typ	Max	Units	Conditions
Operating Voltage Range	V_{DD}	1.0	—	5.5	V	
Specified V_{DD} Value to V_{OUT} Low	V_{DD}	1.0	—	—	V	$I_{\overline{RST}}$ = 10 µA, $V_{\overline{RST}}$ < 0.3V
Operating Current:	I_{DD}	—	5	10	µA	Watchdog Timer Active
		—	1	2	µA	Watchdog Timer Inactive
		—	1	2	µA	$V_{DD} < V_{TRIP}$
		—	5	10	µA	Reset Delay Timer Active

Note 1: Trip point is ±1.5% from typical value.

2: Trip point is ±2.5% from typical value.

3: Hysteresis is minimum = 1%, maximum = 6% at +25°C.

4: This specification allows this device to be used in PIC® microcontroller applications that require the In-Circuit Serial Programming™ (ICSP™) feature (see device-specific programming specifications for voltage requirements). The total time that the $\overline{RST}$ pin can be above the maximum device operational voltage (5.5V) is 100s. Current into the $\overline{RST}$ pin should be limited to 2 mA. It is recommended that the device operational temperature be maintained between 0°C to +70°C (+25°C preferred). For additional information, refer to Figure 2-35.

5: This parameter is established by characterization and is not 100% tested.

6: Custom ordered voltage trip point; minimum order volume requirement. Information available upon request.

DC CHARACTERISTICS (CONTINUED)

Electrical Specifications: Unless otherwise indicated, all limits are specified for V_{DD} = 1V to 5.5V, R_{PU} = 100 kΩ (only **MCP1320**, **MCP1321** and **MCP1322**), T_A = -40°C to +125°C.

Parameters		Sym	Min	Typ	Max	Units	Conditions
V_{DD} Trip Point	MCP13XX-20	V_{TRIP}	1.970	2.00	2.030	V	T_A = +25°C (**Note 1**)
	(**Note 6**)		1.950	2.00	2.050	V	T_A = -40°C to +85°C (**Note 2**)
	MCP13XX-21		2.069	2.10	2.132	V	T_A = +25°C (**Note 1**)
	(**Note 6**)		2.048	2.10	2.153	V	T_A = -40°C to +85°C (**Note 2**)
	MCP13XX-22		2.167	2.20	2.233	V	T_A = +25°C (**Note 1**)
	(**Note 6**)		2.145	2.20	2.255	V	T_A = -40°C to +85°C (**Note 2**)
	MCP13XX-23		2.266	2.30	2.335	V	T_A = +25°C (**Note 1**)
	(**Note 6**)		2.243	2.30	2.358	V	T_A = -40°C to +85°C (**Note 2**)
	MCP13XX-24		2.364	2.40	2.436	V	T_A = +25°C (**Note 1**)
	(**Note 6**)		2.340	2.40	2.460	V	T_A = -40°C to +85°C (**Note 2**)
	MCP13XX-25		2.463	2.50	2.538	V	T_A = +25°C (**Note 1**)
	(**Note 6**)		2.438	2.50	2.563	V	T_A = -40°C to +125°C (**Note 2**)
	MCP13XX-26		2.561	2.60	2.639	V	T_A = +25°C (**Note 1**)
	(**Note 6**)		2.535	2.60	2.665	V	T_A = -40°C to +125°C (**Note 2**)
	MCP13XX-27		2.660	2.70	2.741	V	T_A = +25°C (**Note 1**)
	(**Note 6**)		2.633	2.70	2.768	V	T_A = -40°C to +125°C (**Note 2**)
	MCP13XX-28		2.758	2.80	2.842	V	T_A = +25°C (**Note 1**)
	(**Note 6**)		2.730	2.80	2.870	V	T_A = -40°C to +125°C (**Note 2**)
	MCP13XX-29		2.857	2.90	2.944	V	T_A = +25°C (**Note 1**)
			2.828	2.90	2.973	V	T_A = -40°C to +125°C (**Note 2**)
	MCP13XX-30		2.955	3.00	3.045	V	T_A = +25°C (**Note 1**)
	(**Note 6**)		2.925	3.00	3.075	V	T_A = -40°C to +125°C (**Note 2**)
	MCP13XX-31		3.054	3.10	3.147	V	T_A = +25°C (**Note 1**)
	(**Note 6**)		3.023	3.10	3.178	V	T_A = -40°C to +125°C (**Note 2**)
	MCP13XX-32		3.152	3.20	3.248	V	T_A = +25°C (**Note 1**)
	(**Note 6**)		3.120	3.20	3.280	V	T_A = -40°C to +125°C (**Note 2**)
	MCP13XX-33		3.251	3.30	3.350	V	T_A = +25°C (**Note 1**)
	(**Note 6**)		3.218	3.30	3.383	V	T_A = -40°C to +125°C (**Note 2**)

Note 1: Trip point is ±1.5% from typical value.

2: Trip point is ±2.5% from typical value.

3: Hysteresis is minimum = 1%, maximum = 6% at +25°C.

4: This specification allows this device to be used in PIC® microcontroller applications that require the In-Circuit Serial Programming™ (ICSP™) feature (see device-specific programming specifications for voltage requirements). The total time that the RST pin can be above the maximum device operational voltage (5.5V) is 100s. Current into the RST pin should be limited to 2 mA. It is recommended that the device operational temperature be maintained between 0°C to +70°C (+25°C preferred). For additional information, refer to Figure 2-35.

5: This parameter is established by characterization and is not 100% tested.

6: Custom ordered voltage trip point; minimum order volume requirement. Information available upon request.

© 2005-2012 Microchip Technology Inc.

DC CHARACTERISTICS (CONTINUED)

Electrical Specifications: Unless otherwise indicated, all limits are specified for V_{DD} = 1V to 5.5V, R_{PU} = 100 kΩ (only **MCP1320**, **MCP1321** and **MCP1322**), T_A = -40°C to +125°C.

Parameters		Sym	Min	Typ	Max	Units	Conditions
V_{DD} Trip Point (Con't)	MCP13XX-34	V_{TRIP}	3.349	3.40	3.451	V	T_A = +25°C (**Note 1**)
	(**Note 6**)		3.315	3.40	3.385	V	T_A = -40°C to +125°C (**Note 2**)
	MCP13XX-35		3.448	3.50	3.553	V	T_A = +25°C (**Note 1**)
	(**Note 6**)		3.413	3.50	3.588	V	T_A = -40°C to +125°C (**Note 2**)
	MCP13XX-36		3.546	3.60	3.654	V	T_A = +25°C (**Note 1**)
	(**Note 6**)		3.510	3.60	3.690	V	T_A = -40°C to +125°C (**Note 2**)
	MCP13XX-37		3.645	3.70	3.756	V	T_A = +25°C (**Note 1**)
	(**Note 6**)		3.608	3.70	3.793	V	T_A = -40°C to +125°C (**Note 2**)
	MCP13XX-38		3.743	3.80	3.857	V	T_A = +25°C (**Note 1**)
	(**Note 6**)		3.705	3.80	3.895	V	T_A = -40°C to +125°C (**Note 2**)
	MCP13XX-39		3.842	3.90	3.959	V	T_A = +25°C (**Note 1**)
	(**Note 6**)		3.803	3.90	3.998	V	T_A = -40°C to +125°C (**Note 2**)
	MCP13XX-40		3.940	4.00	4.060	V	T_A = +25°C (**Note 1**)
	(**Note 6**)		3.900	4.00	4.100	V	T_A = -40°C to +125°C (**Note 2**)
	MCP13XX-41		4.039	4.10	4.162	V	T_A = +25°C (**Note 1**)
	(**Note 6**)		3.998	4.10	4.203	V	T_A = -40°C to +125°C (**Note 2**)
	MCP13XX-42		4.137	4.20	4.263	V	T_A = +25°C (**Note 1**)
	(**Note 6**)		4.095	4.20	4.305	V	T_A = -40°C to +125°C (**Note 2**)
	MCP13XX-43		4.236	4.30	4.365	V	T_A = +25°C (**Note 1**)
	(**Note 6**)		4.193	4.30	4.408	V	T_A = -40°C to +125°C (**Note 2**)
	MCP13XX-44		4.334	4.40	4.466	V	T_A = +25°C (**Note 1**)
	(**Note 6**)		4.290	4.40	4.510	V	T_A = -40°C to +125°C (**Note 2**)
	MCP13XX-45		4.433	4.50	4.568	V	T_A = +25°C (**Note 1**)
	(**Note 6**)		4.388	4.50	4.613	V	T_A = -40°C to +125°C (**Note 2**)
	MCP13XX-46		4.531	4.60	4.669	V	T_A = +25°C (**Note 1**)
			4.485	4.60	4.715	V	T_A = -40°C to +125°C (**Note 2**)
	MCP13XX-47		4.630	4.70	4.771	V	T_A = +25°C (**Note 1**)
	(**Note 6**)		4.583	4.70	4.818	V	T_A = -40°C to +125°C (**Note 2**)
V_{DD} Trip Point Tempco		T_{TPCO}	—	±40	—	ppm/°C	

Note 1: Trip point is ±1.5% from typical value.

2: Trip point is ±2.5% from typical value.

3: Hysteresis is minimum = 1%, maximum = 6% at +25°C.

4: This specification allows this device to be used in PIC® microcontroller applications that require the In-Circuit Serial Programming™ (ICSP™) feature (see device-specific programming specifications for voltage requirements). The total time that the $\overline{RST}$ pin can be above the maximum device operational voltage (5.5V) is 100s. Current into the $\overline{RST}$ pin should be limited to 2 mA. It is recommended that the device operational temperature be maintained between 0°C to +70°C (+25°C preferred). For additional information, refer to Figure 2-35.

5: This parameter is established by characterization and is not 100% tested.

6: Custom ordered voltage trip point; minimum order volume requirement. Information available upon request.

DC CHARACTERISTICS (CONTINUED)

Electrical Specifications: Unless otherwise indicated, all limits are specified for V_{DD} = 1V to 5.5V, R_{PU} = 100 kΩ (only **MCP1320**, **MCP1321** and **MCP1322**), T_A = -40°C to +125°C.

Parameters		Sym	Min	Typ	Max	Units	Conditions
Threshold Hysteresis (**Note 3**)	MCP13XX-20	V_{HYS}	0.020	—	0.120	V	T_A = +25°C (**Note 3**)
	(**Note 6**)		(**Note 6**)			V	T_A = -40°C to +85°C
	MCP13XX-21		0.021	—	0.126	V	T_A = +25°C (**Note 3**)
	(**Note 6**)		(**Note 6**)			V	T_A = -40°C to +85°C
	MCP13XX-22		0.022	—	0.132	V	T_A = +25°C (**Note 3**)
	(**Note 6**)		(**Note 6**)			V	T_A = -40°C to +85°C
	MCP13XX-23		0.023	—	0.138	V	T_A = +25°C (**Note 3**)
	(**Note 6**)		(**Note 6**)			V	T_A = -40°C to +85°C
	MCP13XX-24		0.024	—	0.144	V	T_A = +25°C (**Note 3**)
	(**Note 6**)		(**Note 6**)			V	T_A = -40°C to +85°C
	MCP13XX-25		0.025	—	0.150	V	T_A = +25°C (**Note 3**)
	(**Note 6**)		(**Note 6**)			V	T_A = -40°C to +125°C
	MCP13XX-26		0.026	—	0.156	V	T_A = +25°C (**Note 3**)
	(**Note 6**)		(**Note 6**)			V	T_A = -40°C to +125°C
	MCP13XX-27		0.027	—	0.162	V	T_A = +25°C (**Note 3**)
	(**Note 6**)		(**Note 6**)			V	T_A = -40°C to +125°C
	MCP13XX-28		0.028	—	0.168	V	T_A = +25°C (**Note 3**)
	(**Note 6**)		(**Note 6**)			V	T_A = -40°C to +125°C
	MCP13XX-29		0.029	—	0.174	V	T_A = +25°C (**Note 3**)
			(**Note 6**)			V	T_A = -40°C to +125°C
	MCP13XX-30		0.030	—	0.180	V	T_A = +25°C (**Note 3**)
	(**Note 6**)		(**Note 6**)			V	T_A = -40°C to +125°C
	MCP13XX-31		0.031	—	0.186	V	T_A = +25°C (**Note 3**)
	(**Note 6**)		(**Note 6**)			V	T_A = -40°C to +125°C
	MCP13XX-32		0.032	—	0.192	V	T_A = +25°C (**Note 3**)
	(**Note 6**)		(**Note 6**)			V	T_A = -40°C to +125°C
	MCP13XX-33		0.033	—	0.198	V	T_A = +25°C (**Note 3**)
	(**Note 6**)		(**Note 6**)			V	T_A = -40°C to +125°C

Note 1: Trip point is ±1.5% from typical value.

2: Trip point is ±2.5% from typical value.

3: Hysteresis is minimum = 1%, maximum = 6% at +25°C.

4: This specification allows this device to be used in PIC® microcontroller applications that require the In-Circuit Serial Programming™ (ICSP™) feature (see device-specific programming specifications for voltage requirements). The total time that the $\overline{RST}$ pin can be above the maximum device operational voltage (5.5V) is 100s. Current into the $\overline{RST}$ pin should be limited to 2 mA. It is recommended that the device operational temperature be maintained between 0°C to +70°C (+25°C preferred). For additional information, refer to Figure 2-35.

5: This parameter is established by characterization and is not 100% tested.

6: Custom ordered voltage trip point; minimum order volume requirement. Information available upon request.

© 2005-2012 Microchip Technology Inc.

DC CHARACTERISTICS (CONTINUED)

Electrical Specifications: Unless otherwise indicated, all limits are specified for V_{DD} = 1V to 5.5V, R_{PU} = 100 kΩ (only **MCP1320**, **MCP1321** and **MCP1322**), T_A = -40°C to +125°C.

Parameters		Sym	Min	Typ	Max	Units	Conditions
Threshold Hysteresis (Continued) (**Note 3**)	MCP13XX-34	V_{HYS}	0.034	—	0.204	V	T_A = +25°C (**Note 3**)
	(**Note 6**)		(**Note 6**)			V	T_A = -40°C to +125°C
	MCP13XX-35		0.035	—	0.210	V	T_A = +25°C (**Note 3**)
	(**Note 6**)		(**Note 6**)			V	T_A = -40°C to +125°C
	MCP13XX-36		0.036	—	0.216	V	T_A = +25°C (**Note 3**)
	(**Note 6**)		(**Note 6**)			V	T_A = -40°C to +125°C
	MCP13XX-37		0.037	—	0.222	V	T_A = +25°C (**Note 3**)
	(**Note 6**)		(**Note 6**)			V	T_A = -40°C to +125°C
	MCP13XX-38		0.038	—	0.228	V	T_A = +25°C (**Note 3**)
	(**Note 6**)		(**Note 6**)			V	T_A = -40°C to +125°C
	MCP13XX-39		0.039	—	0.234	V	T_A = +25°C (**Note 1**)
	(**Note 6**)		(**Note 6**)			V	T_A = -40°C to +125°C
	MCP13XX-40		0.040	—	0.240	V	T_A = +25°C (**Note 3**)
	(**Note 6**)		(**Note 6**)			V	T_A = -40°C to +125°C
	MCP13XX-41		0.041	—	0.246	V	T_A = +25°C (**Note 3**)
	(**Note 6**)		(**Note 6**)			V	T_A = -40°C to +125°C
	MCP13XX-42		0.042	—	0.252	V	T_A = +25°C (**Note 3**)
	(**Note 6**)		(**Note 6**)			V	T_A = -40°C to +125°C
	MCP13XX-43		0.043	—	0.258	V	T_A = +25°C (**Note 3**)
	(**Note 6**)		(**Note 6**)			V	T_A = -40°C to +125°C
	MCP13XX-44		0.044	—	0.264	V	T_A = +25°C (**Note 3**)
	(**Note 6**)		(**Note 6**)			V	T_A = -40°C to +125°C
	MCP13XX-45		0.045	—	0.270	V	T_A = +25°C (**Note 3**)
	(**Note 6**)		(**Note 6**)			V	T_A = -40°C to +125°C
	MCP13XX-46		0.046	—	0.276	V	T_A = +25°C (**Note 3**)
			(**Note 6**)			V	T_A = -40°C to +125°C
	MCP13XX-47		0.047	—	0.282	V	T_A = +25°C (**Note 3**)
	(**Note 6**)		(**Note 6**)			V	T_A = -40°C to +125°C

Note 1: Trip point is ±1.5% from typical value.

2: Trip point is ±2.5% from typical value.

3: Hysteresis is minimum = 1%, maximum = 6% at +25°C.

4: This specification allows this device to be used in PIC® microcontroller applications that require the In-Circuit Serial Programming™ (ICSP™) feature (see device-specific programming specifications for voltage requirements). The total time that the $\overline{RST}$ pin can be above the maximum device operational voltage (5.5V) is 100s. Current into the $\overline{RST}$ pin should be limited to 2 mA. It is recommended that the device operational temperature be maintained between 0°C to +70°C (+25°C preferred). For additional information, refer to Figure 2-35.

5: This parameter is established by characterization and is not 100% tested.

6: Custom ordered voltage trip point; minimum order volume requirement. Information available upon request.

DC CHARACTERISTICS (CONTINUED)

Electrical Specifications: Unless otherwise indicated, all limits are specified for V_{DD} = 1V to 5.5V, R_{PU} = 100 kΩ (only **MCP1320**, **MCP1321** and **MCP1322**), T_A = -40°C to +125°C.

Parameters		Sym	Min	Typ	Max	Units	Conditions
RST/$\overline{RST}$ Low-Level Output Voltage		V_{OL}	—	—	0.3	V	I_{OL} = 50 µA, 1.0V ≤ V_{DD} ≤ 1.5V
			—	—	0.3	V	I_{OL} = 100 µA, 1.5V < V_{DD} ≤ 2.5V
			—	—	0.3	V	I_{OL} = 2 mA, 2.5V < V_{DD} ≤ 4.5V
			—	—	0.3	V	I_{OL} = 4 mA, V_{DD} > 4.5V
RST/$\overline{RST}$ High-Level Output Voltage (Push-Pull Outputs only)		V_{OH}	V_{DD} – 0.7	—	—	V	I_{OH} = 2.5 mA, V_{DD} ≥ 2.5V
			V_{DD} – 0.7	—	—	V	I_{OH} = 500 µA, V_{DD} ≥ 1.5V
Input Low Voltage ($\overline{MR}$ and WDI pins)		V_{IL}	V_{SS}	—	0.3V_{DD}	V	
Input High Voltage ($\overline{MR}$ and WDI pins)		V_{IH}	0.7 V_{DD}	—	V_{DD}	V	
Open-Drain High Voltage on Output **(Note 4)**		V_{ODH}	—	—	13.5 **(4)**	V	Open-Drain Output pin only, V_{DD} = 3.0V, Time voltage > 5.5V applied ≤ 100 s, current into pin limited to 2 mA, +25°C operation recommended **(Note 4, Note 5)**
Input Leakage Current ($\overline{MR}$ and WDI)		I_{IL}	—	—	±1	µA	V_{SS} ≤ V_{PIN} ≤ V_{DD}
Open-Drain Output Leakage Current (**MCP1316M**, **MCP1318M**, **MCP1319M**, **MCP1320**, **MCP1321,** and **MCP1322** only)		I_{OD}	—	0.003	1.0	µA	
Pull-up Resistance	$\overline{MR}$ pin	R_{PU}	—	52	—	kΩ	V_{DD} = 5.5V
	WDI pin		—	52	—	kΩ	V_{DD} = 5.5V
	$\overline{RST}$ pin		—	4.7	—	kΩ	V_{DD} = 5.5V, **MCP131XM** devices only
Input Pin Capacitance ($\overline{MR}$ and WDI)		C_I	—	100	—	pF	
Output Pin Capacitive Loading (RST and $\overline{RST}$)		C_O	—	—	50	pF	This is the tester loading to meet the AC timing specifications.

Note 1: Trip point is ±1.5% from typical value.

2: Trip point is ±2.5% from typical value.

3: Hysteresis is minimum = 1%, maximum = 6% at +25°C.

4: This specification allows this device to be used in PIC® microcontroller applications that require the In-Circuit Serial Programming™ (ICSP™) feature (see device-specific programming specifications for voltage requirements). The total time that the $\overline{RST}$ pin can be above the maximum device operational voltage (5.5V) is 100s. Current into the $\overline{RST}$ pin should be limited to 2 mA. It is recommended that the device operational temperature be maintained between 0°C to +70°C (+25°C preferred). For additional information, refer to Figure 2-35.

5: This parameter is established by characterization and is not 100% tested.

6: Custom ordered voltage trip point; minimum order volume requirement. Information available upon request.

© 2005-2012 Microchip Technology Inc.

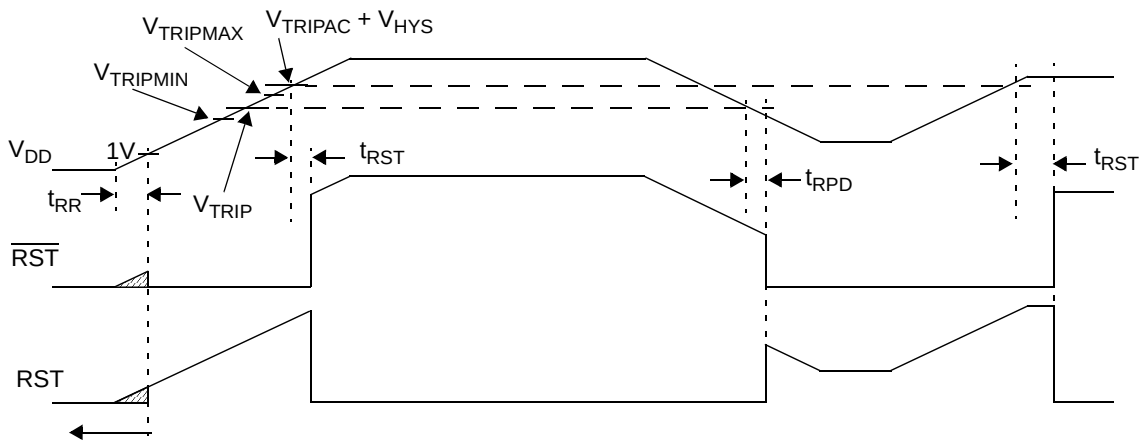

V_{DD} < 1V is outside the device operating specification. The RST (or $\overline{RST}$) output state is unknown while V_{DD} < 1V.

FIGURE 1-1: *Device Voltage and Reset Pin Waveforms.*

TABLE 1-1: DEVICE VOLTAGE AND RESET PIN TIMINGS

Electrical Specifications: Unless otherwise indicated, all limits are specified for V_{DD} = 1V to 5.5V, R_{PU} = 100 kΩ (only **MCP1320**, **MCP1321**, and **MCP1322**), T_A = -40°C to +125°C.

Parameters	Sym	Min	Typ	Max	Units	Conditions
Falling V_{DD} Trip Point Detected to RST or $\overline{RST}$ Active	t_{RPD}	—	650	—	µs	V_{DD} ramped from $V_{TRIPMAX}$ + 250 mV down to $V_{TRIPMIN}$ – 200 mV, V_{DD} falling @ 5 mV/µs, C_L = 50 pF (**Note 1**)
V_{DD} Rise Rate	t_{RR}	**Note 3**				
Reset active time ($\overline{MR}$ Rising Edge, POR/BOR Inactive, or WDT time out) to RST/$\overline{RST}$ Inactive	t_{RST}	1.0	1.4	2.0	ms	**Note 2**
		20	30	40	ms	**Note 2**
		140	200	280	ms	Standard Time Out
		1120	1600	2240	ms	**Note 2**
RST Rise Time after RST Active **(Push-Pull Outputs only)**	t_{RT}	—	5	—	µs	For RST 10% to 90% of V_{DD}, C_L = 50 pF (**Note 1**)
$\overline{RST}$ Rise Time after $\overline{RST}$ Inactive **(Push-Pull Outputs only)**		—	5	—	µs	For $\overline{RST}$ 10% to 90% of V_{DD}, C_L = 50 pF (**Note 1**)
RST Fall Time after RST Inactive	t_{FT}	—	5	—	µs	For RST 90% to 10% of V_{DD}, C_L = 50 pF (**Note 1**)
$\overline{RST}$ Fall Time after $\overline{RST}$ Active		—	5	—	µs	For $\overline{RST}$ 90% to 10% of V_{DD}, C_L = 50 pF (**Note 1**)

Note 1: These parameters are for design guidance only and are not 100% tested.

2: Custom ordered Reset active time; minimum order volume requirement.

3: Designed to be independent of V_{DD} rise rate. Device characterization was done with a rise rate as slow as 0.1 V/s (@ +25°C).

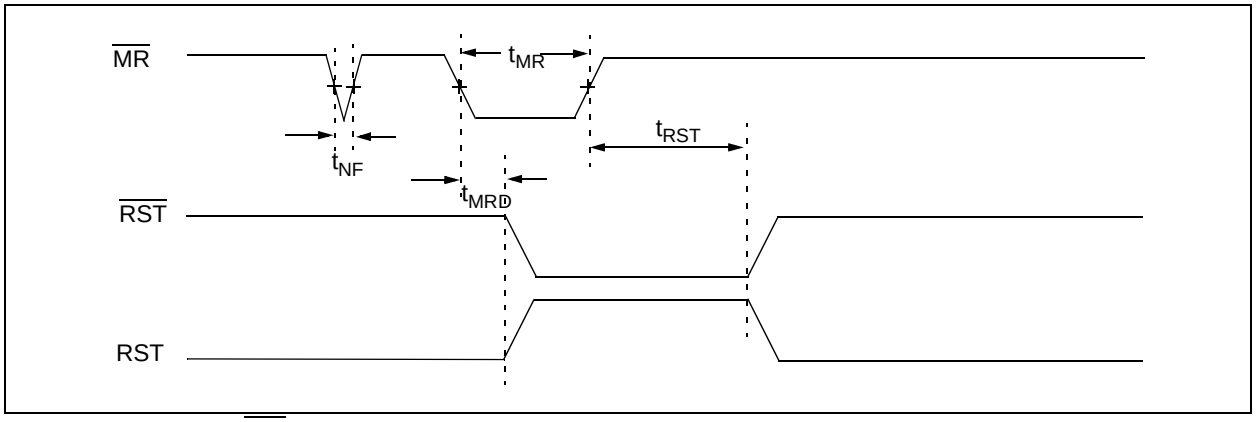

FIGURE 1-2: *$\overline{MR}$ and Reset Pin Waveforms.*

TABLE 1-2: $\overline{MR}$ AND RESET PIN TIMINGS

Electrical Specifications: Unless otherwise indicated, all limits are specified for V_{DD} = 1V to 5.5V, R_{PU} = 100 kΩ (only **MCP1320**, **MCP1321**, and **MCP1322**), T_A = -40°C to +125°C.

Parameters	Sym	Min	Typ	Max	Units	Conditions
$\overline{MR}$ Pulse Width	t_{MR}	1	—	—	µs	
$\overline{MR}$ Active to RST/$\overline{RST}$ Active	t_{MRD}	—	235	—	ns	V_{DD} = 5.0V
$\overline{MR}$ Input Noise filter	t_{NF}	—	150	—	ns	V_{DD} = 5.0V

Note 1: These parameters are for design guidance only and are not 100% tested.

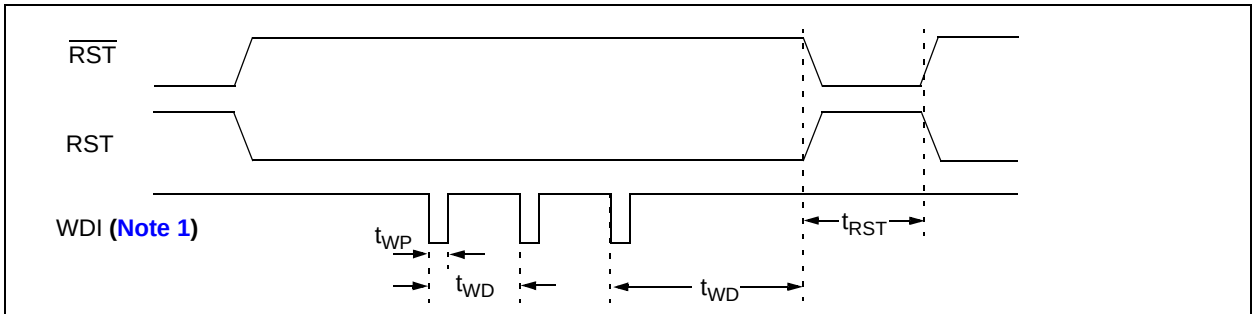

Note 1: The WDI pin was a weak pull-up resistor which is disabled after the 1st falling edge on the WDI pin.

FIGURE 1-3: *WDI and Reset Pin Waveforms.*

TABLE 1-3: WDI AND RESET PIN TIMINGS

Electrical Specifications: Unless otherwise indicated, all limits are specified for V_{DD} = 1V to 5.5V, R_{PU} = 100 kΩ (only **MCP1320**, **MCP1321**, and **MCP1322**), T_A = -40°C to +125°C.

Parameters	Sym	Min	Typ	Max	Units	Conditions
WDI Pulse Width	t_{WP}	50	—	—	ns	
Watchdog Time-Out Period	t_{WD}	4.3	6.3	9.3	ms	**Note 1**
		71	102	153	ms	**Note 1**
		1.12	1.6	2.4	sec	Standard Time Out
		17.9	25.6	38.4	sec	**Note 1**

Note 1: Custom ordered WatchDog Timer time out; minimum order volume requirement.

© 2005-2012 Microchip Technology Inc.

TEMPERATURE CHARACTERISTICS

Electrical Specifications: Unless otherwise noted, all limits are specified for V_{DD} = 1V to 5.5V, R_{PU} = 100 kΩ (only **MCP1316**), T_A = -40°C to +125°C.

Parameters	Sym	Min	Typ	Max	Units	Conditions
Temperature Ranges						
Specified Temperature Range	T_A	-40	—	+85	°C	**MCP13XX-25** (or below)
Specified Temperature Range	T_A	-40	—	+125	°C	Except **MCP13XX-25** (or below)
Maximum Junction Temperature	T_J	—	—	+150	°C	
Storage Temperature Range	T_A	-65	—	+150	°C	
Package Thermal Resistances						
Thermal Resistance, 5L-SOT-23	θ_{JA}	—	220.7	—	°C/W	

NOTES:

© 2005-2012 Microchip Technology Inc.

2.0 TYPICAL PERFORMANCE CURVES

Note:	The graphs and tables provided following this note are a statistical summary based on a limited number of samples and are provided for informational purposes only. The performance characteristics listed herein are not tested or guaranteed. In some graphs or tables, the data presented may be outside the specified operating range (e.g., outside specified power supply range) and therefore outside the warranted range.

Note: Unless otherwise indicated, all limits are specified for V_{DD} = 1V to 5.5V, R_{PU} = 100 kΩ (only **MCP1316**; see **Figure 4-1**), T_A = -40°C to +125°C.

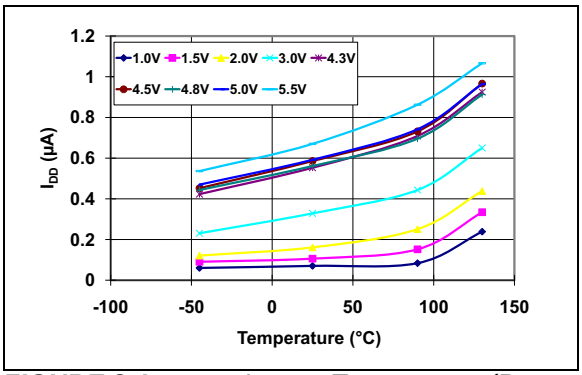

FIGURE 2-1: *I_{DD} vs. Temperature (Reset Power-up Timer Inactive and Watchdog Timer Inactive) (**MCP1318M-4.6**).*

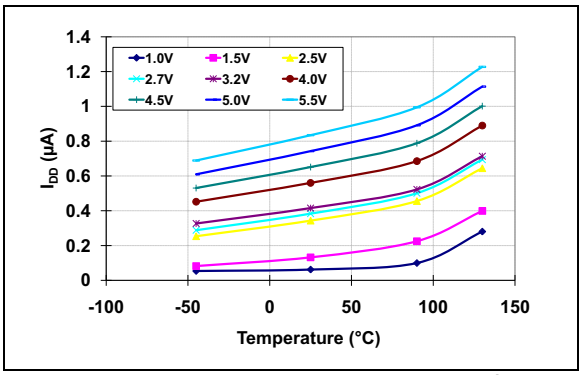

FIGURE 2-2: *I_{DD} vs. Temperature (Reset Power-up Timer Inactive and Watchdog Timer Inactive) (**MCP1319-2.9**).*

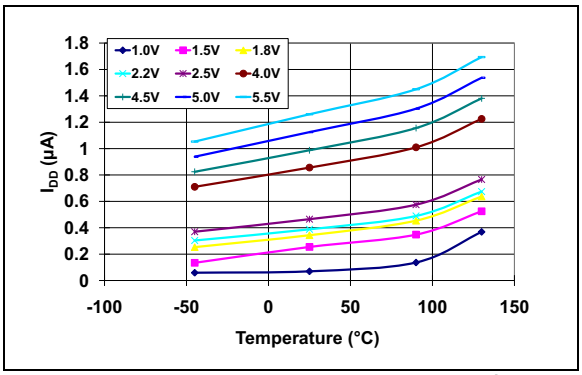

FIGURE 2-3: *I_{DD} vs. Temperature (Reset Power-up Timer Inactive and Watchdog Timer Inactive) (**MCP1316-2.0**).*

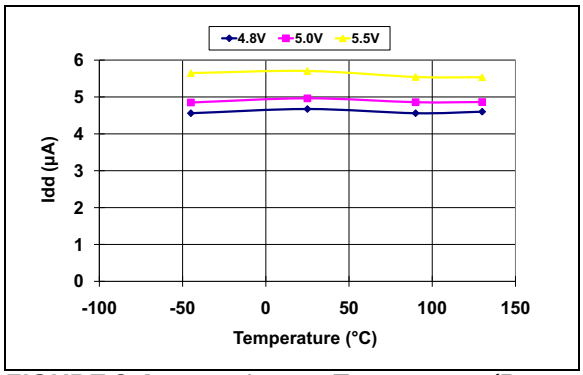

FIGURE 2-4: *I_{DD} vs. Temperature (Reset Power-up Timer Active) (**MCP1318M-4.6**).*

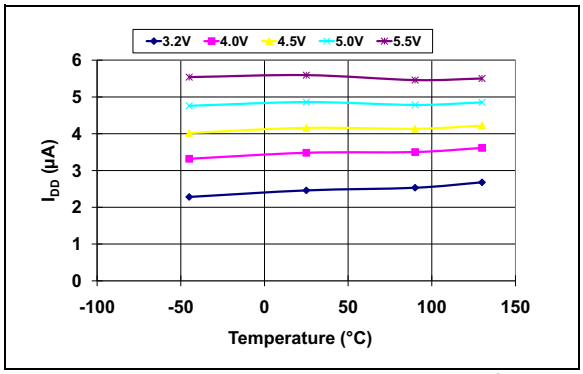

FIGURE 2-5: *I_{DD} vs. Temperature (Reset Power-up Timer Active) (**MCP1319-2.9**).*

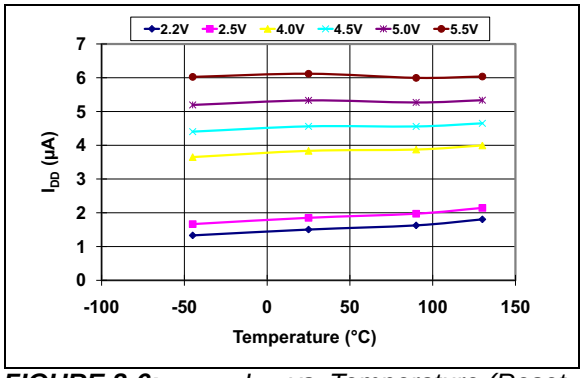

FIGURE 2-6: *I_{DD} vs. Temperature (Reset Power-up Timer Active) (**MCP1316-2.0**).*

Note: Unless otherwise indicated, all limits are specified for V_{DD} = 1V to 5.5V, R_{PU} = 100 kΩ (only **MCP1316**; see **Figure 4-1**), T_A = -40°C to +125°C.

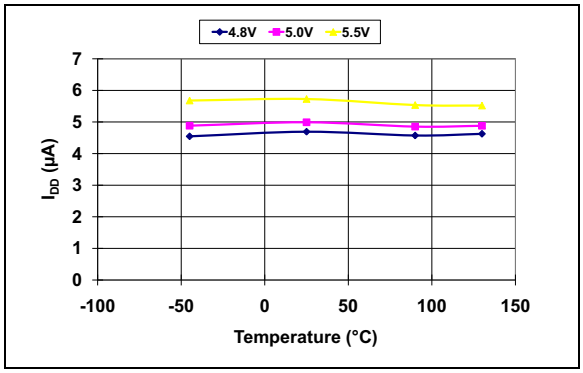

FIGURE 2-7: *I_{DD} vs. Temperature (Watchdog Timer Active) (**MCP1318M-4.6**).*

MCP1319 does not have a Watchdog Timer

FIGURE 2-8: *I_{DD} vs. Temperature (Watchdog Timer Active) (**MCP1319-2.9**).*

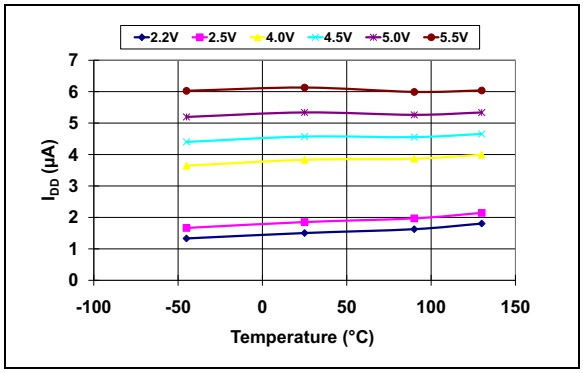

FIGURE 2-9: *I_{DD} vs. Temperature (Watchdog Timer Active) (**MCP1316-2.0**).*

© 2005-2012 Microchip Technology Inc.

Note: Unless otherwise indicated, all limits are specified for V_{DD} = 1V to 5.5V, R_{PU} = 100 kΩ (only **MCP1316**; see **Figure 4-1**), T_A = -40°C to +125°C.

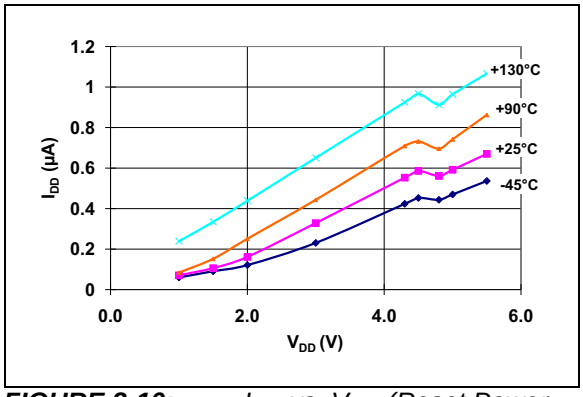

FIGURE 2-10: *I_{DD} vs. V_{DD} (Reset Power-up Timer Inactive and Watchdog Timer Inactive) (**MCP1318M-4.6**).*

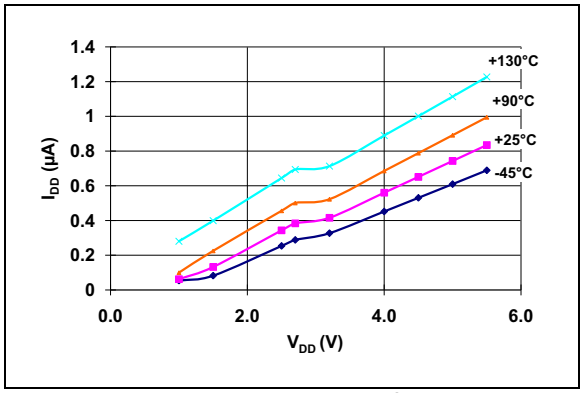

FIGURE 2-11: *I_{DD} vs. V_{DD} (Reset Power-up Timer Inactive and Watchdog Timer Inactive) (**MCP1319-2.9**).*

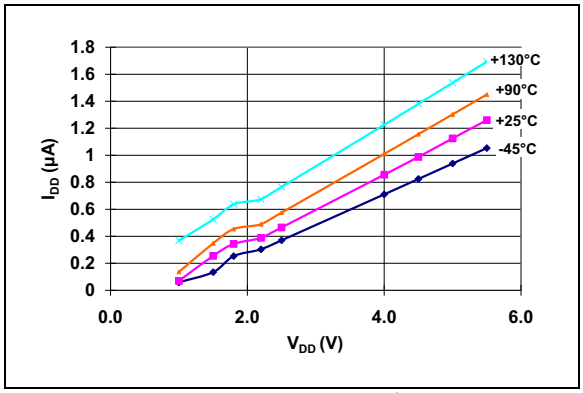

FIGURE 2-12: *I_{DD} vs. V_{DD} (Reset Power-up Timer Inactive and Watchdog Timer Inactive) (**MCP1316-2.0**).*

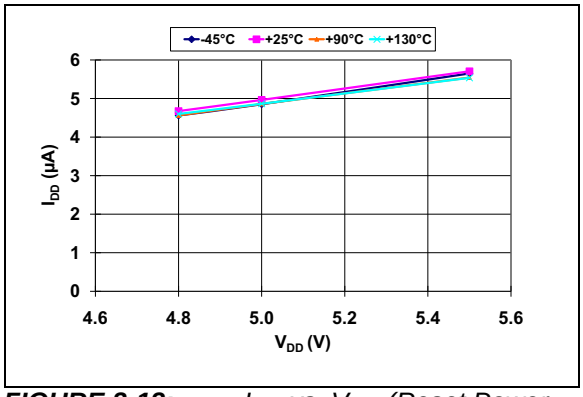

FIGURE 2-13: *I_{DD} vs. V_{DD} (Reset Power-up Timer Active or Watchdog Timer Active) (**MCP1318M-4.6**).*

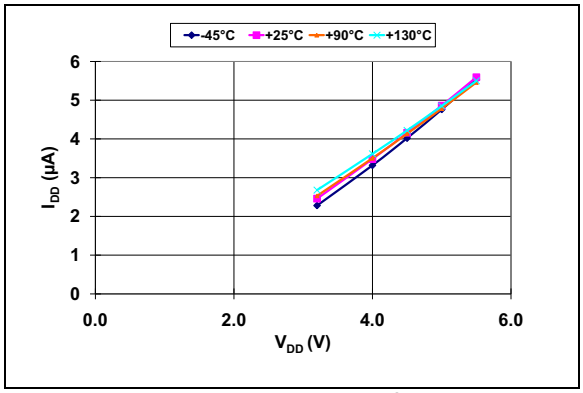

FIGURE 2-14: *I_{DD} vs. V_{DD} (Reset Power-up Timer Active or Watchdog Timer Active) (**MCP1319-2.9**).*

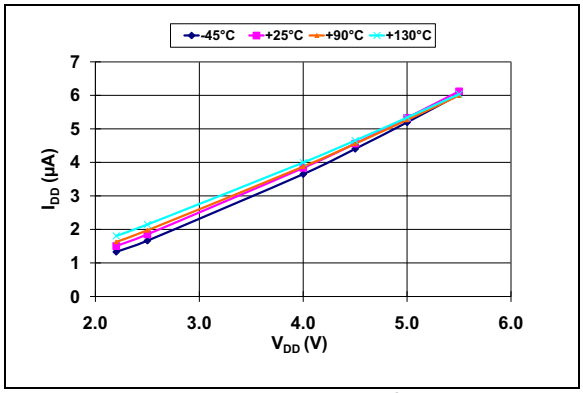

FIGURE 2-15: *I_{DD} vs. V_{DD} (Reset Power-up Timer Active or Watchdog Timer Active) (**MCP1316-2.0**).*

Note: Unless otherwise indicated, all limits are specified for V_{DD} = 1V to 5.5V, R_{PU} = 100 kΩ (**only MCP1316**; see **Figure 4-1**), T_A = -40°C to +125°C.

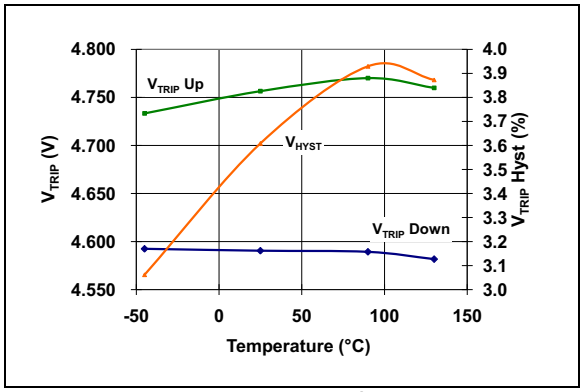

FIGURE 2-16: *V_{TRIP} and V_{HYST} vs. Temperature (**MCP1318M-4.6**).*

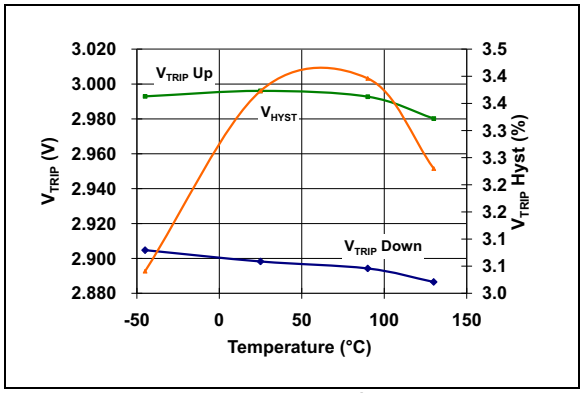

FIGURE 2-17: *V_{TRIP} and V_{HYST} vs. Temperature (**MCP1319-2.9**).*

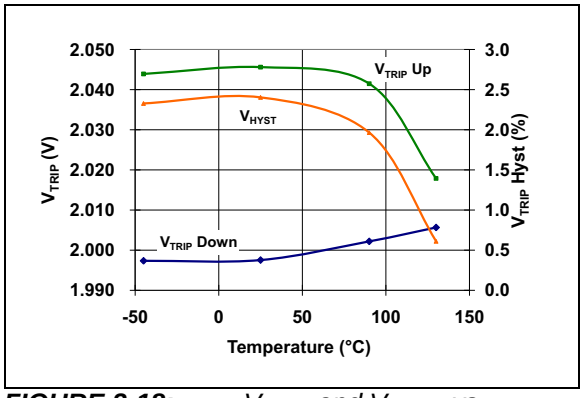

FIGURE 2-18: *V_{TRIP} and V_{HYST} vs. Temperature (**MCP1316-2.0**).*

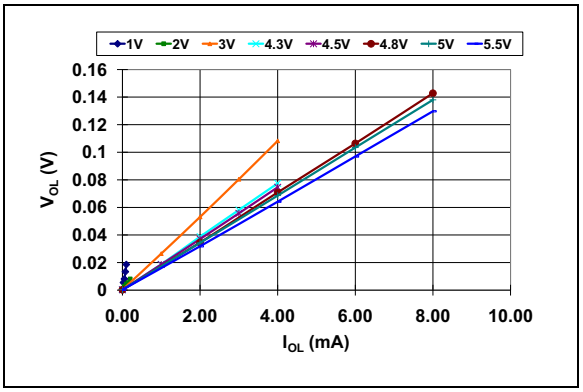

FIGURE 2-19: *V_{OL} vs. I_{OL} (**MCP1318M-4.6**).*

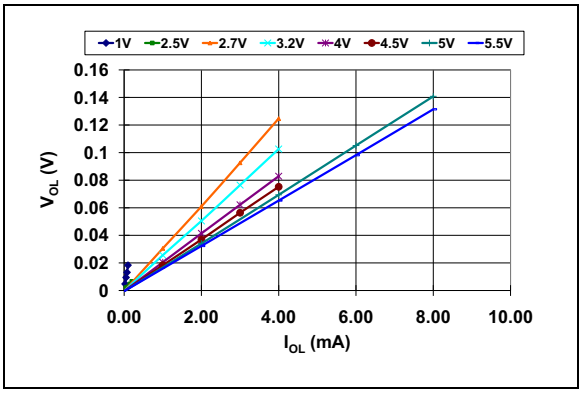

FIGURE 2-20: *V_{OL} vs. I_{OL} (**MCP1319-2.9**).*

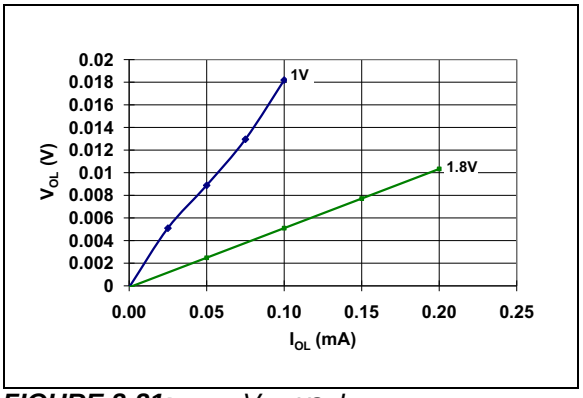

FIGURE 2-21: *V_{OL} vs. I_{OL} (**MCP1316-2.0**).*

© 2005-2012 Microchip Technology Inc.

Note: Unless otherwise indicated, all limits are specified for V_{DD} = 1V to 5.5V, R_{PU} = 100 kΩ (**only MCP1316**; see **Figure 4-1**), T_A = -40°C to +125°C.

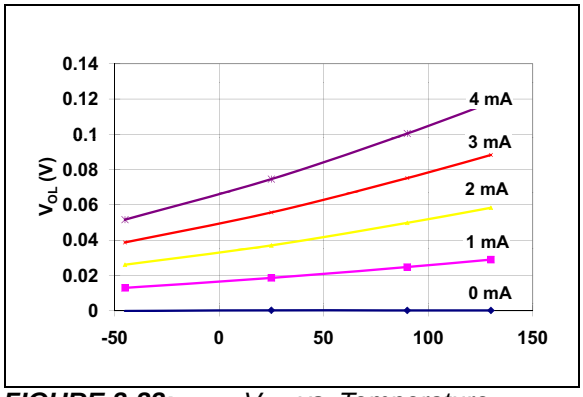

FIGURE 2-22: *V_{OL} vs. Temperature (**MCP1318M-4.6** @ V_{DD} = 4.5V).*

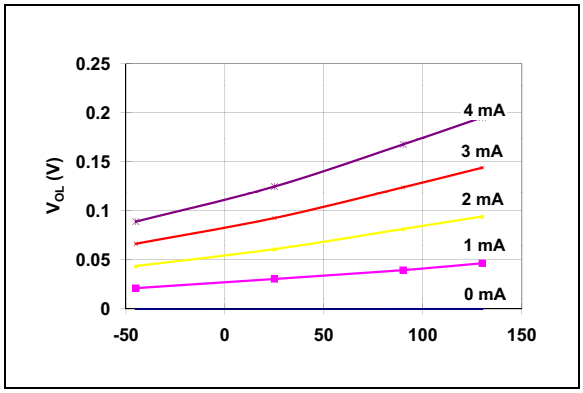

FIGURE 2-23: *V_{OL} vs. Temperature (**MCP1319-2.9** @ V_{DD} = 2.7V).*

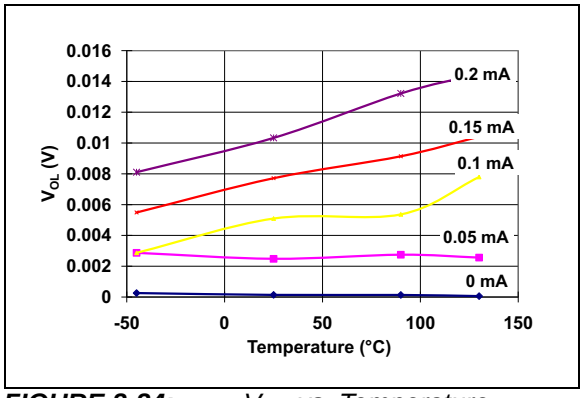

FIGURE 2-24: *V_{OL} vs. Temperature (**MCP1316-2-0** @ V_{DD} = 1.8V).*

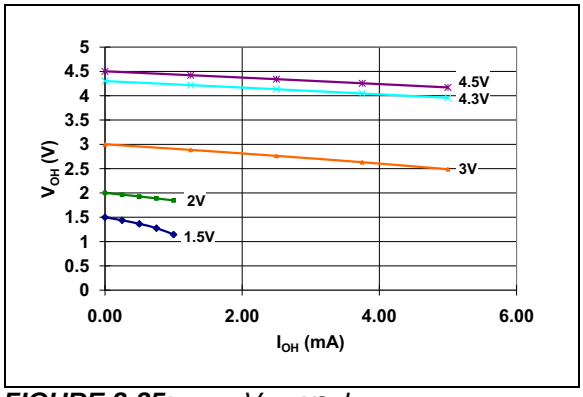

FIGURE 2-25: *V_{OH} vs. I_{OH} (**MCP1318M-4.6** @ +25°C).*

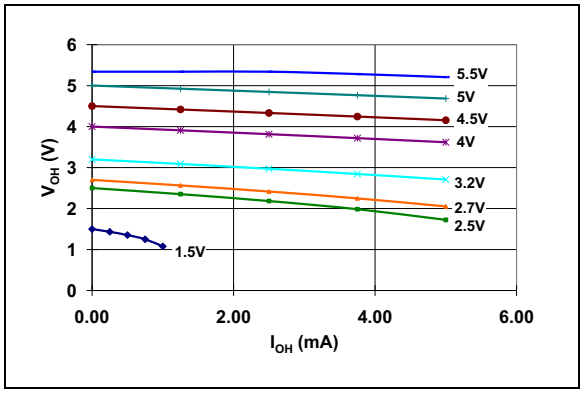

FIGURE 2-26: *V_{OH} vs. I_{OH} (**MCP1319-2.9** @ +25°C).*

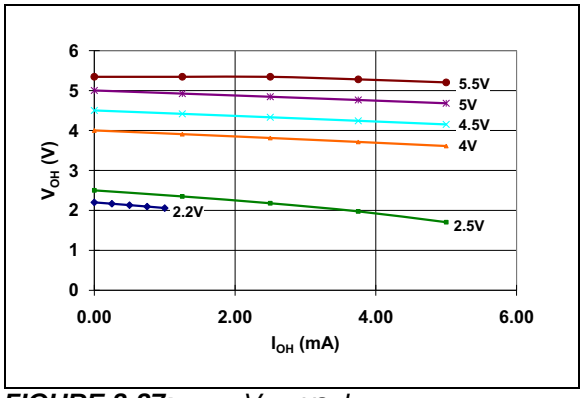

FIGURE 2-27: *V_{OH} vs. I_{OH} (**MCP1316-2.0** @ +25°C).*

Note: Unless otherwise indicated, all limits are specified for V_{DD} = 1V to 5.5V, R_{PU} = 100 kΩ (**only MCP1316**; see **Figure 4-1**), T_A = -40°C to +125°C.

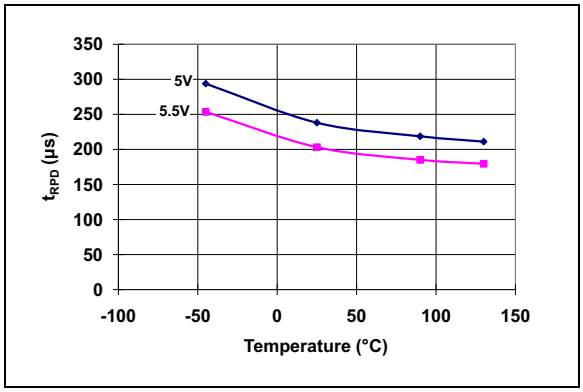

FIGURE 2-28: *t_{RPD} vs. Temperature (**MCP1318M-4.6**).*

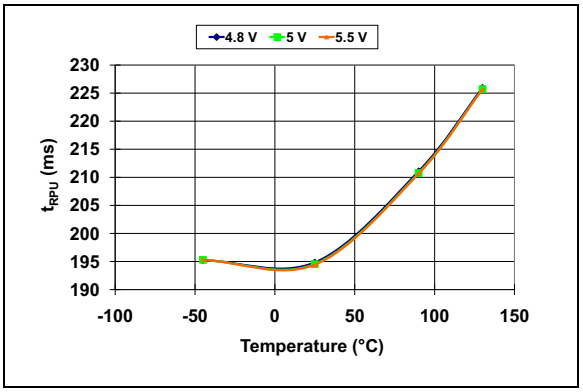

FIGURE 2-31: *t_{RPU} vs. Temperature (**MCP1318M-4.6**).*

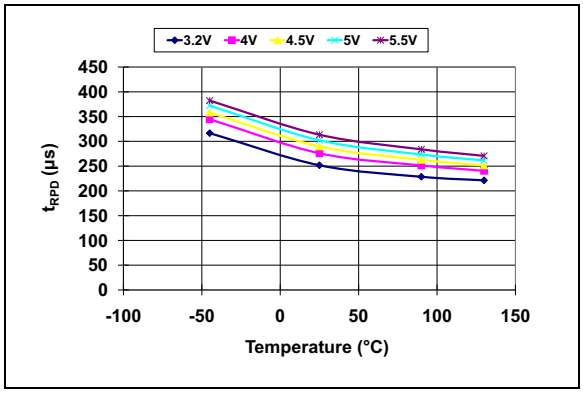

FIGURE 2-29: *t_{RPD} vs. Temperature (**MCP1319-2.9**).*

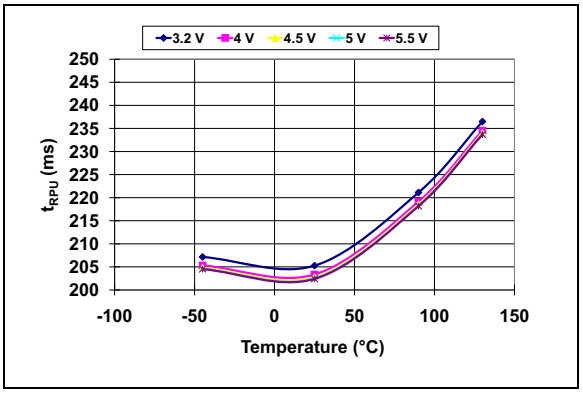

FIGURE 2-32: *t_{RPU} vs. Temperature (**MCP1319-2.9**).*

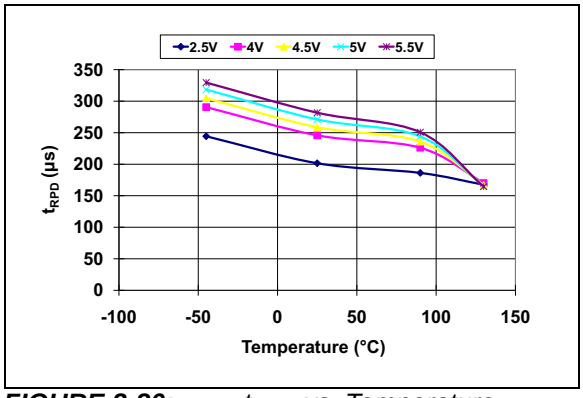

FIGURE 2-30: *t_{RPD} vs. Temperature (**MCP1316-2.0**).*

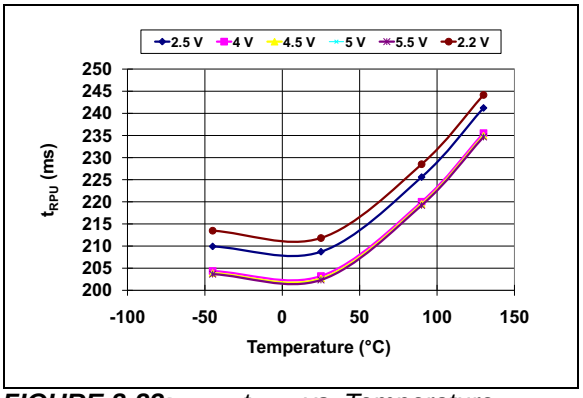

FIGURE 2-33: *t_{RPU} vs. Temperature (**MCP1316-2.0**).*

© 2005-2012 Microchip Technology Inc.

Note: Unless otherwise indicated, all limits are specified for V_{DD} = 1V to 5.5V, R_{PU} = 100 kΩ (**only MCP1316**; see **Figure 4-1**), T_A = -40°C to +125°C.

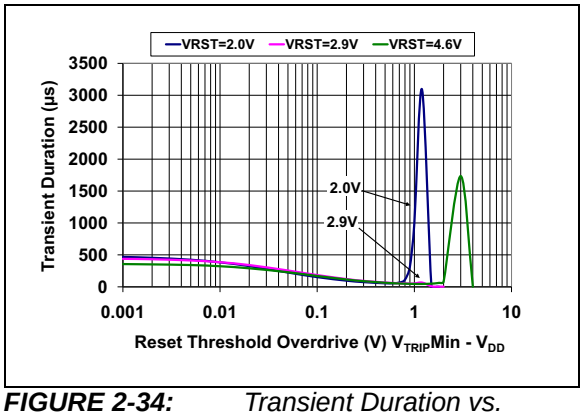

FIGURE 2-34: *Transient Duration vs. V_{TRIP} (min) – V_{DD}.*

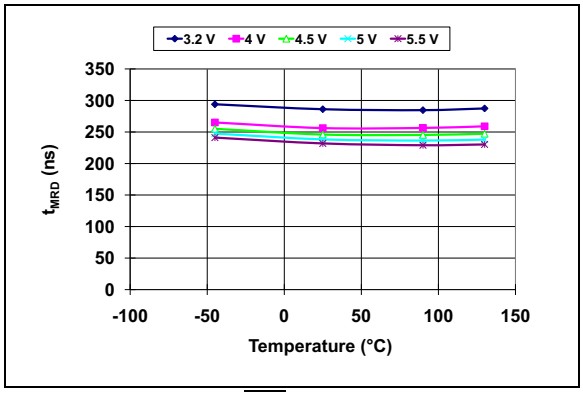

FIGURE 2-37: *$\overline{MR}$ Low to Reset Propagation Delay (**MCP1319-2.9**).*

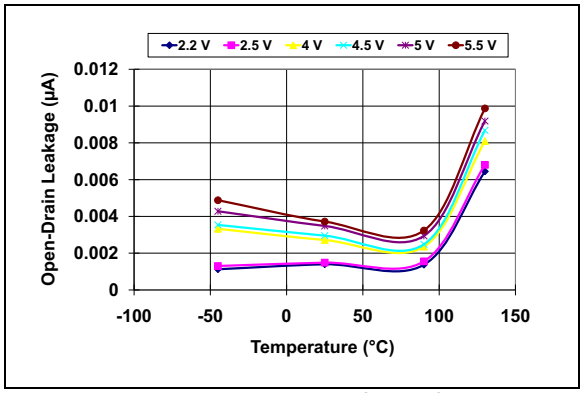

FIGURE 2-35: *Open-Drain Leakage Current vs. Temperature (**MCP1320-2.0**).*

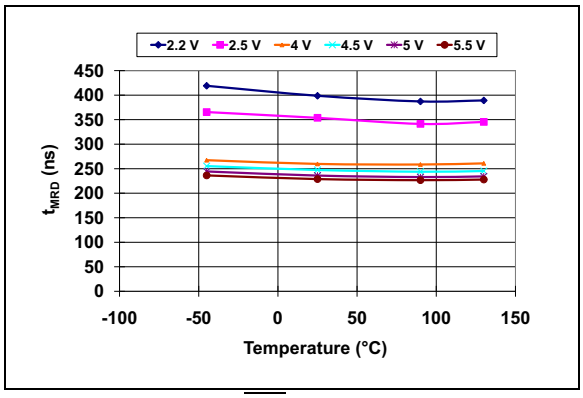

FIGURE 2-38: *$\overline{MR}$ Low to Reset Propagation Delay (**MCP1316-2.0**).*

MCP1318M does not have an $\overline{MR}$ pin

FIGURE 2-36: *$\overline{MR}$ Low to Reset Propagation Delay (**MCP1318M-4.6**).*

Note: Unless otherwise indicated, all limits are specified for V_{DD} = 1V to 5.5V, R_{PU} = 100 kΩ (**only MCP1316**; see **Figure 4-1**), T_A = -40°C to +125°C.

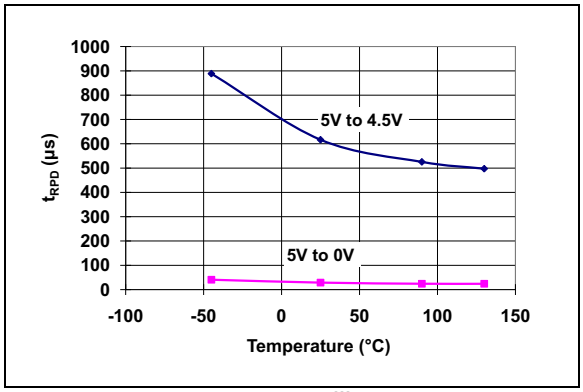

FIGURE 2-39: *V_{DD} Falling to Reset Propagation Delay vs. Temperature (**MCP1318M-4.6**).*

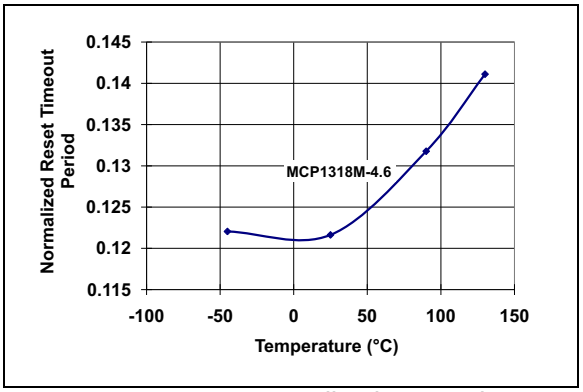

FIGURE 2-42: *Normalized Reset Time-Out Period vs. Temperature (**MCP1318M-4.6**).*

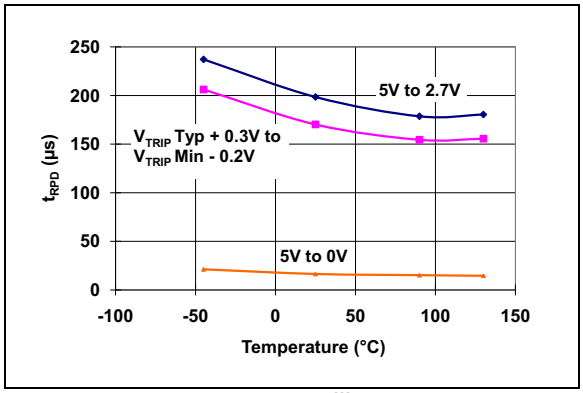

FIGURE 2-40: *V_{DD} Falling to Reset Propagation Delay vs. Temperature (**MCP1319-2.9**).*

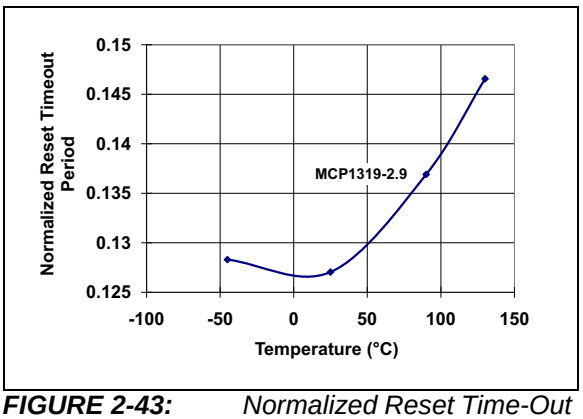

FIGURE 2-43: *Normalized Reset Time-Out Period vs. Temperature (**MCP1319-2.9**).*

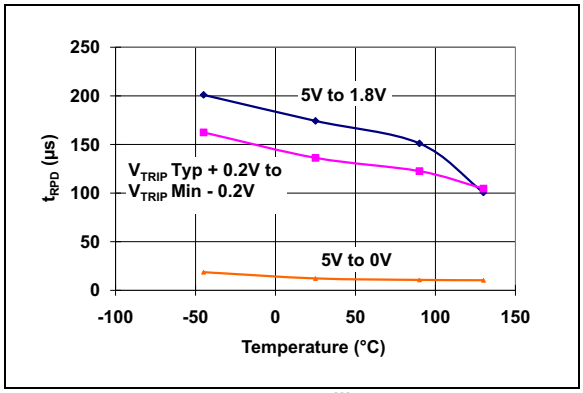

FIGURE 2-41: *V_{DD} Falling to Reset Propagation Delay vs. Temperature (**MCP1316-2.0**).*

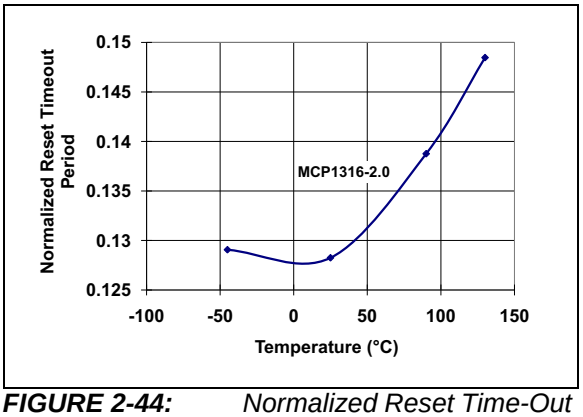

FIGURE 2-44: *Normalized Reset Time-Out Period vs. Temperature (**MCP1316-2.0**).*

© 2005-2012 Microchip Technology Inc.

Note: Unless otherwise indicated, all limits are specified for V_{DD} = 1V to 5.5V, R_{PU} = 100 kΩ (**only MCP1316**; see **Figure 4-1**), T_A = -40°C to +125°C.

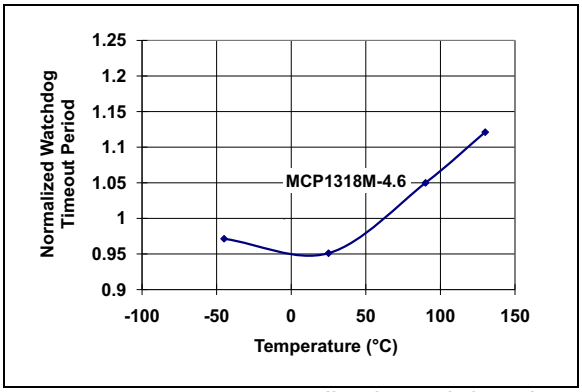

FIGURE 2-45: *Normalized Watchdog Time-Out Period vs. Temperature (**MCP1318M-4.6**).*

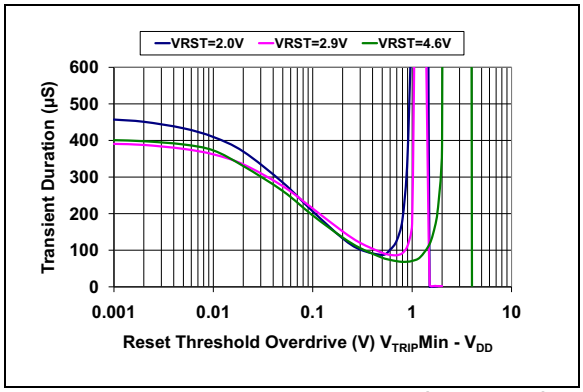

FIGURE 2-48: *Max V_{DD} Transient Duration vs. Reset Threshold Overdrive.*

MCP1319 does not have a Watchdog Timer

FIGURE 2-46: *Normalized Watchdog Time-Out Period vs. Temperature (**MCP1319-2.9**).*

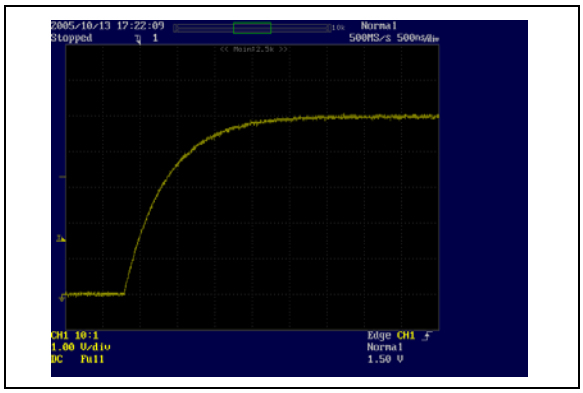

FIGURE 2-49: *"M" Part Number Pull-up Characteristics (**MCP1318M-4.6**).*

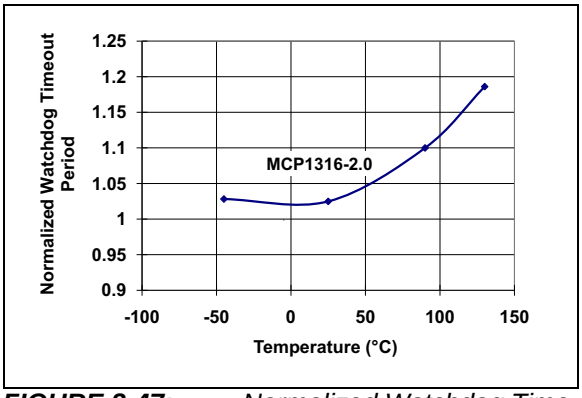

FIGURE 2-47: *Normalized Watchdog Time-Out Period vs. Temperature (**MCP1316-2.0**).*

NOTES:

© 2005-2012 Microchip Technology Inc.

3.0 PIN DESCRIPTION

The descriptions of the pins are listed in Table 3-1.

TABLE 3-1: PIN FUNCTION TABLE

Pin No. SOT23-5	Device	Symbol	Pin Type	Buffer/ Driver Type	Function
1	MCP1316M (1), MCP1318M (1), MCP1319M (1), MCP1320, MCP1321, MCP1322	$\overline{RST}$	O	Open-Drain	Reset Output (active-low) Goes active (Low) if one of these conditions occurs: 1. If V_{DD} falls below the selected Reset voltage threshold. 2. If the $\overline{MR}$ pin is forced low. 3. If the WDI pin does not detect an edge transition within the minimum selected time-out period. 4. During power-up. **V_{DD} Falling:** Open-Drain = $V_{DD} > V_{TRIP}$ L = $V_{DD} < V_{TRIP}$ **V_{DD} Rising:** Open-Drain = $V_{DD} > V_{TRIP} + V_{HYS}$ L = $V_{DD} < V_{TRIP} + V_{HYS}$
	MCP1316, MCP1318, MCP1319		O	Push-Pull	**V_{DD} Falling:** H = $V_{DD} > V_{TRIP}$ L = $V_{DD} < V_{TRIP}$ **V_{DD} Rising:** H = $V_{DD} > V_{TRIP} + V_{HYS}$ L = $V_{DD} < V_{TRIP} + V_{HYS}$
	MCP1317	RST	O	Push-Pull	Reset Output (active-high) Goes active (High) if one of these conditions occurs: 1. If V_{DD} falls below the selected Reset voltage threshold. 2. If the $\overline{MR}$ pin is forced low. 3. If the WDI pin does not detect an edge transition within the minimum selected time-out period. 4. During power-up. **V_{DD} Falling:** H = $V_{DD} < V_{TRIP}$ L = $V_{DD} > V_{TRIP}$ **V_{DD} Rising:** H = $V_{DD} < V_{TRIP} + V_{HYS}$ L = $V_{DD} > V_{TRIP} + V_{HYS}$
2	All	V_{SS}	—	P	The ground reference for the device.

Note 1: Open-Drain output with internal pull-up resistor.

TABLE 3-1: PIN FUNCTION TABLE (CONTINUED)

Pin No. SOT23-5	Device	Symbol	Pin Type	Buffer/ Driver Type	Function
3	MCP1316, MCP1316M, MCP1317, MCP1320	$\overline{MR}$	I	ST	Manual Reset input for a Reset switch. This input allows a push button switch to be directly connected to the MCP131X/2X $\overline{MR}$ pin, which can then be used to force a system Reset. This input filters (ignores) noise pulses that occur on the $\overline{MR}$ pin. L = Switch is depressed (shorted to ground). This forces the RST/$\overline{RST}$ pins Active. H = Switch is open (internal pull-up resistor pulls signal high). State of the RST/$\overline{RST}$ pins determined by other system conditions.
	MCP1318, MCP1318M, MCP1319, MCP1319M, MCP1321, MCP1322	RST	O	Push-Pull	Reset Output (active-high) Goes active (High) if one of these conditions occurs: 1. If V_{DD} falls below the selected Reset voltage threshold. 2. If the $\overline{MR}$ pin is forced low. 3. If the WDI pin does not detect an edge transition within the minimum selected time-out period. 4. During power-up. **V_{DD} Falling:** H = $V_{DD} < V_{TRIP}$ L = $V_{DD} > V_{TRIP}$ **V_{DD} Rising:** H = $V_{DD} < V_{TRIP} + V_{HYS}$ L = $V_{DD} > V_{TRIP} + V_{HYS}$
4	MCP1316, MCP1316M, MCP1317, MCP1318, MCP1318M, MCP1320, MCP1321	WDI	I	ST	Watchdog Timer Input The WDT period is specified at the time of device order. The Standard WDT period is 1.6s typical. An edge transition on the WDI pin resets the Watchdog Timer counter (no time out). A Falling Edge is required to start the WDT Timer.
	MCP1319, MCP1319M, MCP1322	$\overline{MR}$	I	ST	Manual Reset input for a Reset switch. This input allows a push button switch to be directly connected to the MCP131X/2X $\overline{MR}$ pin, which can then be used to force a system Reset. This input filters (ignores) noise pulses that occur on the $\overline{MR}$ pin. L = Switch is depressed (shorted to ground). This forces the RST/$\overline{RST}$ pins Active. H = Switch is open (internal pull-up resistor pulls signal high). State of the RST/$\overline{RST}$ pins determined by other system conditions.
5	All	V_{DD}	—	P	The positive supply for the device.

Note 1: Open-Drain output with internal pull-up resistor.

© 2005-2012 Microchip Technology Inc.

3.1 Ground Terminal (V_{SS})

V_{SS} provides the negative reference for the analog input voltage. Typically, the circuit ground is used.

3.2 Supply Voltage (V_{DD})

V_{DD} can be used for power supply monitoring or a voltage level that requires monitoring.

3.3 Reset Output (RST and $\overline{RST}$)

There are four types of Reset output pins. These are:

1. Open-Drain active-low Reset, External pull-up resistor required
2. Open-Drain active-low Reset, Internal pull-up resistor
3. Push-Pull active-low Reset
4. Push-Pull active-high Reset

Some devices have both an active-low and active-high Reset output.

3.3.1 ACTIVE-LOW ($\overline{RST}$) – OPEN-DRAIN, EXTERNAL PULL-UP RESISTOR

The $\overline{RST}$ open-drain output remains low while V_{DD} is below the Reset voltage threshold (V_{TRIP}). Once the device voltage (V_{DD}) returns to a high level ($V_{TRIP} + V_{HYS}$), the device will remain in Reset for the Reset delay timer (T_{RST}). After that time expires, the $\overline{RST}$ pin will float, and an external pull-up resistor is required to bring the output to the high state.

3.3.2 ACTIVE-LOW ($\overline{RST}$) – OPEN-DRAIN, INTERNAL PULL-UP RESISTOR

The $\overline{RST}$ open-drain output remains low while V_{DD} is below the Reset voltage threshold (V_{TRIP}). Once the device voltage (V_{DD}) returns to a high level ($V_{TRIP} + V_{HYS}$), the device will remain in Reset for the Reset delay timer (T_{RST}). After that time expires, the $\overline{RST}$ pin will be pulled high by an internal pull-up resistor (typically 4.7 kΩ).

3.3.3 ACTIVE-LOW ($\overline{RST}$) – PUSH-PULL

The $\overline{RST}$ push-pull output remains low while V_{DD} is below the Reset voltage threshold (V_{TRIP}). Once the device voltage (V_{DD}) returns to a high level ($V_{TRIP} + V_{HYS}$), the device will remain in Reset for the Reset delay timer (T_{RST}). After that time expires, the $\overline{RST}$ pin will be driven to the high state.

3.3.4 ACTIVE-HIGH (RST) – PUSH-PULL

The RST push-pull output remains high while V_{DD} is below the Reset voltage threshold (V_{TRIP}). Once the device voltage (V_{DD}) returns to a high level ($V_{TRIP} + V_{HYS}$), the device will remain in Reset for the Reset delay timer (T_{RST}). After that time expires, the RST pin will be driven to the low state.

3.4 Manual Reset Input ($\overline{MR}$)

The Manual Reset ($\overline{MR}$) input pin allows a push button switch to easily be connected to the system. When the push button is depressed, it forces a system Reset. This pin has circuitry that filters noise that may be present on the $\overline{MR}$ signal.

The $\overline{MR}$ pin is active-low and has an internal pull-up resistor.

3.5 Watchdog Input

In some systems, it is desirable to have an external Watchdog Timer to monitor the operation of the system. This is done by requiring the embedded controller to “pet” the Watchdog Timer within a predetermined time frame (T_{WD}). If the MCP131X/2X is not “petted” within this time frame, the MCP131X/2X will force the Reset pin(s) active.

The embedded controller “pets” the MCP131X/2X by forcing an edge transition on the WDI pin. The WDT Timer is activated by the first falling edge on the WDI pin.

The standard offering devices have a typical Watchdog Timer period (T_{WD}) of 1.6 s. Table 1-3 shows the available Watchdog Timer periods.

NOTES:

© 2005-2012 Microchip Technology Inc.

4.0 OPERATIONAL DESCRIPTION

For many of today's microcontroller applications, care must be taken to prevent low-power conditions that can cause many different system problems. The most common causes are brown-out conditions, where the system supply drops below the operating level momentarily. The second most common cause is when a slowly decaying power supply causes the microcontroller to begin executing instructions without sufficient voltage to sustain volatile memory (RAM), thus producing indeterminate results. Figure 4-1 shows a typical application circuit.

The MCP131X/2X family of voltage supervisor devices are designed to keep a microcontroller in Reset, until the system voltage has reached and stabilized at the proper level for reliable system operation. These devices also operate as protection from brown-out conditions when the system supply voltage drops below a safe operating level.

Some MCP131X/2X family members include a Watchdog Timer feature that after being enabled (by a falling edge on the WDI pin), monitors the WDI pin for falling or rising edges. If an edge transition is not detected within the expected time frame, the MCP131X/2X devices will force the Reset pin active. This is useful to ensure that the embedded system's Host Controller program is operating as expected.

Some MCP131X/2X family members include a Manual Reset feature that allow a push button switch to be directly connected to the MCP131X/2X devices (on the $\overline{MR}$ pin). This allows the system to easily be reset from the external control of the push button switch.

A superset block diagram is shown in Figure 4-2, with device specific block diagrams shown in Figure 4-3 through Figure 4-12.

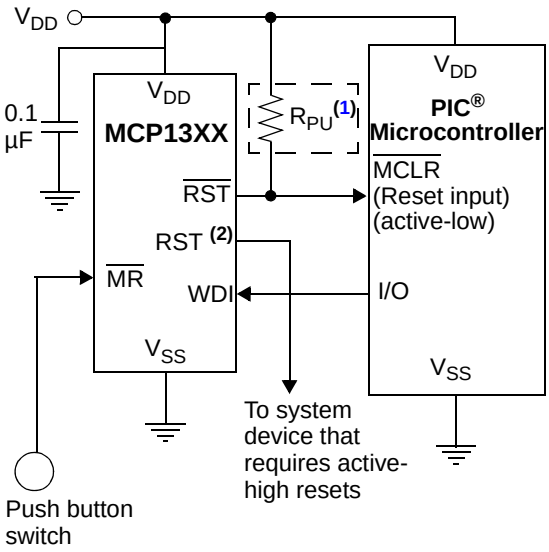

Note 1: Resistor R_{PU} may be required with the MCP1320, MCP1321 or MCP1322 due to the open-drain output.
Resistor R_{PU} may not be required with the MCP1316M, MCP1318M or MCP1319M due to the internal pull-up resistor.
The MCP1316, MCP1317, MCP1318 and MCP1319 do not require the external pull-up resistor.

2: Not all devices offer the active-high Reset output pin.

FIGURE 4-1: *Typical Application Circuit.*

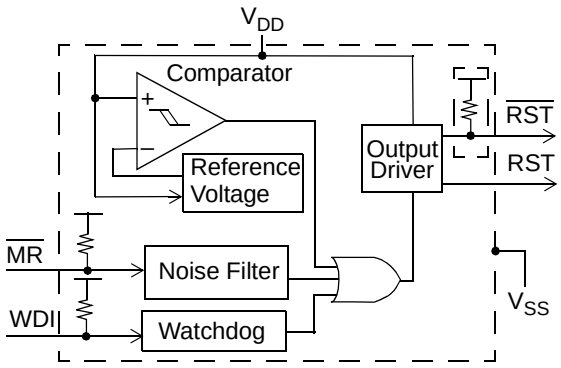

Note: Features available depend on the device.

FIGURE 4-2: *Family Block Diagram.*

4.0.1 DEVICE SPECIFIC BLOCK DIAGRAMS

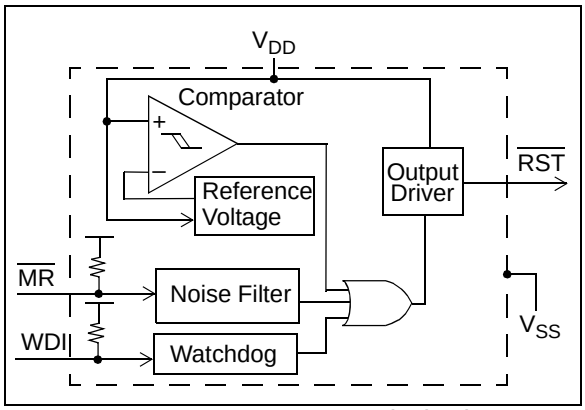

FIGURE 4-3: *MCP1316 Block Diagram.*

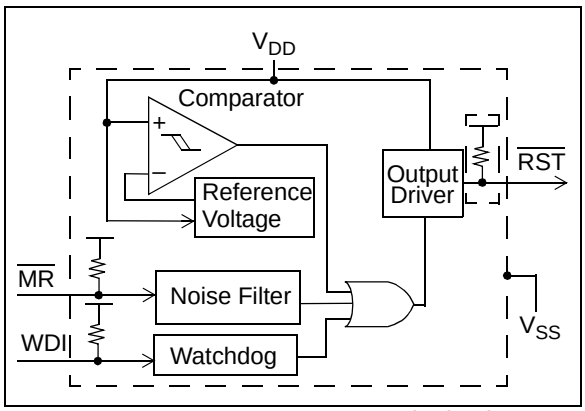

FIGURE 4-4: *MCP1316M Block Diagram.*

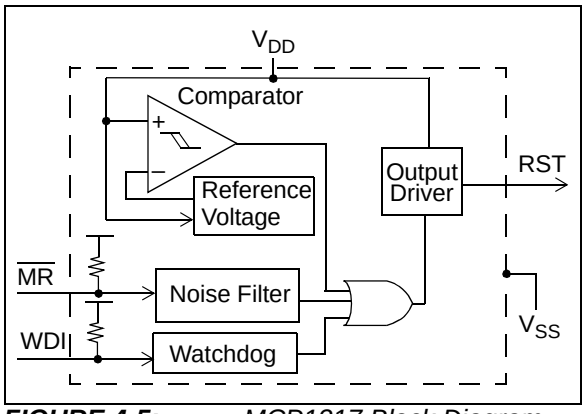

FIGURE 4-5: *MCP1317 Block Diagram.*

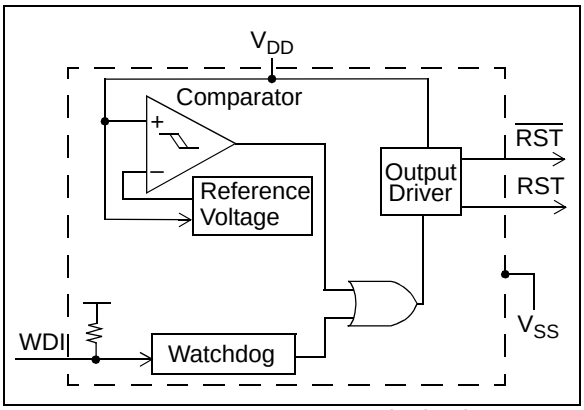

FIGURE 4-6: *MCP1318 Block Diagram.*

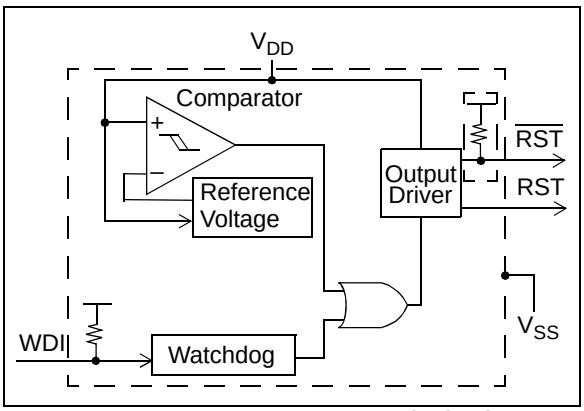

FIGURE 4-7: *MCP1318M Block Diagram.*

© 2005-2012 Microchip Technology Inc.

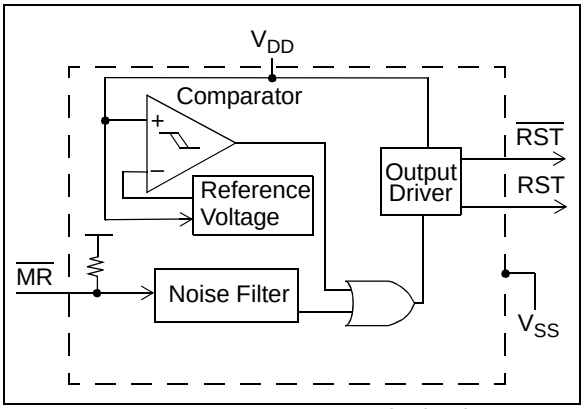

FIGURE 4-8: *MCP1319 Block Diagram.*

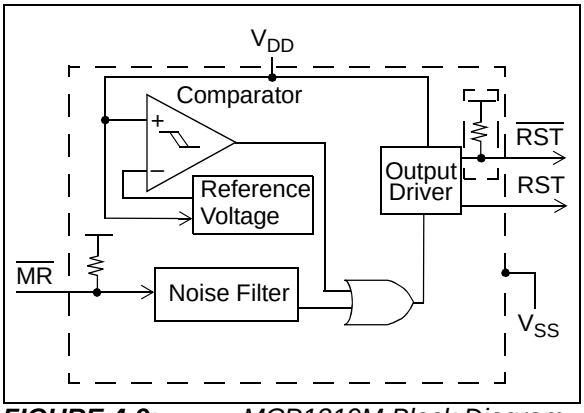

FIGURE 4-9: *MCP1319M Block Diagram.*

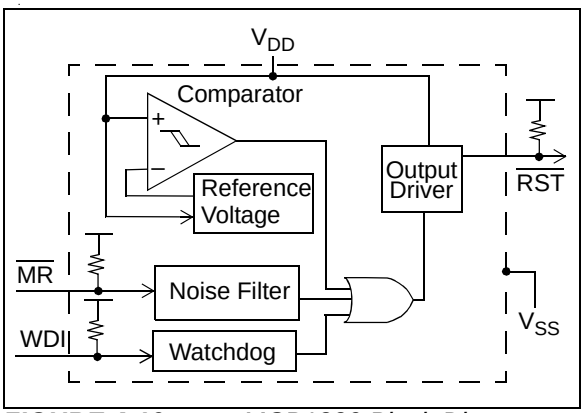

FIGURE 4-10: *MCP1320 Block Diagram.*

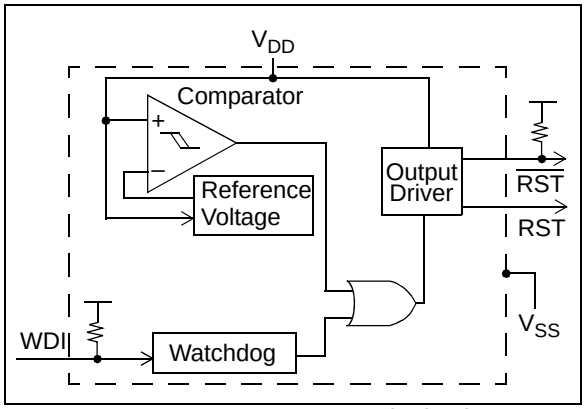

FIGURE 4-11: *MCP1321 Block Diagram.*

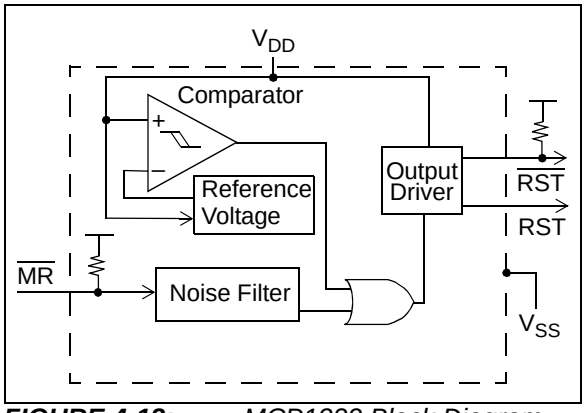

FIGURE 4-12: *MCP1322 Block Diagram.*

4.1 Reset Voltage Trip Point (V_{TRIP}) Operation

The device's Reset voltage trip point (V_{TRIP}) is selected when the device is ordered. As the voltage on the device's V_{DD} pin is above or below this selected trip point, the output of the Reset pin (RST/$\overline{RST}$) will be forced to either the inactive or active state.

For the voltage trip point, there is a minimum trip voltage ($V_{TRIPMIN}$) and a maximum trip voltage ($V_{TRIPMAX}$). The voltage that the device "actually" trips at will be referred to as V_{TRIP}. The trip voltage is specified for the falling of the device V_{DD}.

There is also a hysteresis (V_{HYS}) on the trip point. This is so that noise on the device voltage (V_{DD}) does not cause the Reset pin (RST/$\overline{RST}$) to "jitter" (change between driving an active and inactive state).

The Reset pin (RST or $\overline{RST}$) will be forced active if any of the following occur:

- The Manual Reset input ($\overline{MR}$) goes low
- The Watchdog Timer times out
- V_{DD} goes below the threshold
- During device power-up

After the device exits the Reset condition, the delay circuitry will hold the RST and $\overline{RST}$ pins active until the appropriate Reset delay time (t_{RST}) has elapsed.

TABLE 4-1: RESET PIN STATES

Device	State of $\overline{RST}$ Pin when:		State of RST [3] Pin when:		Output Driver
	$V_{DD} < V_{TRIP}$	$V_{DD} > V_{TRIP} + V_{HYS}$	$V_{DD} < V_{TRIP}$	$V_{DD} > V_{TRIP} + V_{HYS}$	
MCP1316	L	H	—	—	Push-pull
MCP1316M	L	H [2]	—	—	Open-drain [2]
MCP1317	—	—	H	L	Push-pull
MCP1318	L	H	H	L	Push-pull
MCP1318M	L	H [2]	H	L	Open-drain [2]
MCP1319	L	H	H	L	Push-pull
MCP1319M	L	H [2]	H	L	Open-drain [2]
MCP1320	L	H [1]	—	—	Open-drain [1]
MCP1321	L	H [1]	H	L	Open-drain [1]
MCP1322	L	H [1]	H	L	Open-drain [1]

Note 1: Requires External Pull-up resistor.
2: Has Internal Pull-up resistor.
3: The RST pin output is always push-pull.

© 2005-2012 Microchip Technology Inc.

4.1.1 POWER-UP/RISING V_{DD}

As the device V_{DD} rises, the device's Reset circuit will remain active until the voltage rises above the "actual" trip point (V_{TRIP}) plus the hysteresis (V_{HYS}).

Figure 4-13 shows a power-up sequence and the waveform of the RST and $\overline{RST}$ pins.

As the device powers up, the voltage will start below the valid operating voltage of the device. At this voltage, the Reset output value is not valid. Once the voltage is above the minimum operating voltage (1V) and below the selected V_{TRIP}, the Reset output will be active.

Once the device voltage rises above the "actual" trip point (V_{TRIP}) plus the hysteresis (V_{HYS}), the Reset delay timer (t_{RST}) starts. When the Reset delay timer times out, the Reset output (RST/$\overline{RST}$) is driven inactive.

Note:	While the Reset delay timer (t_{RST}) is active, additional system current is consumed.

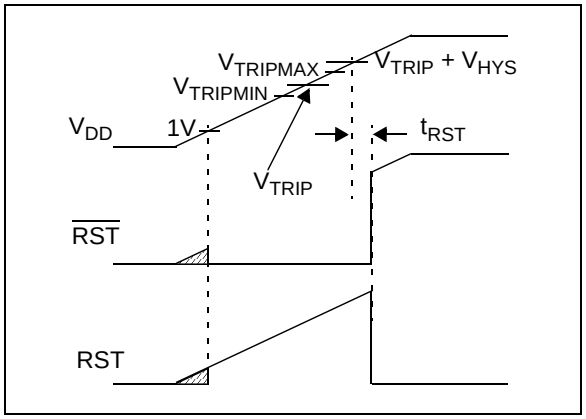

FIGURE 4-13: *Reset Pin Operation on a Power-up.*

4.1.2 POWER-DOWN/BROWN-OUTS

As the device powers-down/brown-outs, the voltage (V_{DD}) falls from a voltage above the device's trip point (V_{TRIP}). The device's "actual" trip point voltage (V_{TRIP}) will be between the minimum trip point ($V_{TRIPMIN}$) and the maximum trip point ($V_{TRIPMAX}$). Once the device voltage (V_{DD}) goes below this voltage, the Reset pin(s) will be forced to the active state. There is a hysteresis on this trip point. This is so noise on the device voltage (V_{DD}) does not cause the Reset pin (RST/$\overline{RST}$) to "jitter" (change between driving an active and inactive).

Figure 4-14 shows the waveform of the $\overline{RST}$ pin as determined by the V_{DD} voltage, while Table 4-1 shows the state of the $\overline{RST}$ pin.

4.1.2.1 Operation of $\overline{RST}$ pin with Internal Pull-Up Resistor

Note:	Only the MCP1316M, MCP1318M and MCP1319M devices have an open-drain $\overline{RST}$ output pin with an internal pull-up resistor.

The internal pull-up resistor has a typical value of 4.7 kΩ. The internal pull-up eliminates the need for an external resistor.

To reduce the current consumption of the device, when the $\overline{RST}$ pin is driving low, the resistor is disconnected.

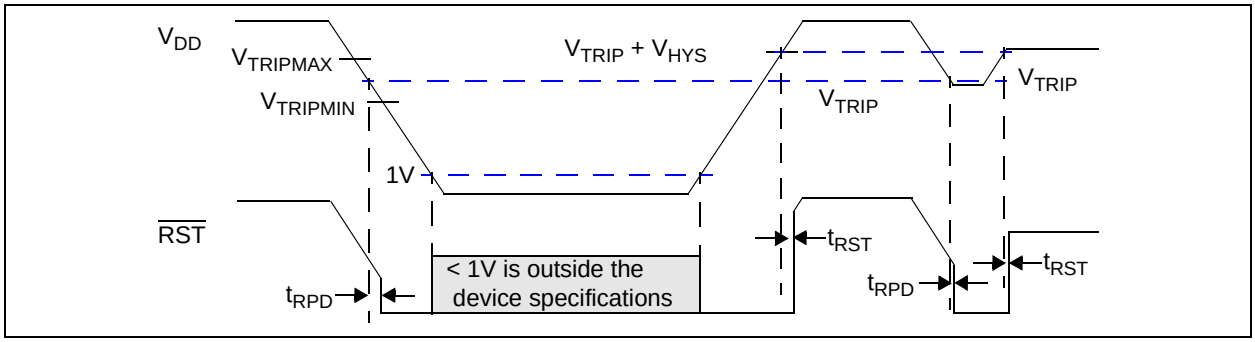

FIGURE 4-14: *$\overline{RST}$ Operation as Determined by the V_{TRIP} and V_{HYS}.*

4.2 Reset Delay Timer (t_{RST})

The Reset delay timer ensures that the MCP131X/2X device will “hold” the embedded system in Reset until the system voltage has stabilized. There are several time-out options to better meet the requirements of different applications. These Reset delay timer time-outs are shown in Table 4-2. The Standard offering time-out is typically 200 ms.

The Reset delay timer (t_{RST}) starts after the device voltage rises above the “actual” trip point (V_{TRIP}) plus the hysteresis (V_{HYS}). When the Reset delay timer times-out, the Reset output pin (RST/$\overline{RST}$) is driven inactive.

Note: While the Reset delay timer (t_{RST}) is active, additional system current is consumed.

TABLE 4-2: RESET DELAY TIMER TIME OUTS (1)

t_{RST}			Units
Min	Typ	Max	
1.0	1.4	2.0	ms
20	30	40	ms
140	200	280	ms
1120	1.6	2.24	sec
↑ This is the minimum time that the Reset delay timer will “hold” the Reset pin active after V_{DD} rises above $V_{TRIP} + V_{HYS}$		↑ This is the maximum time that the Reset delay timer will “hold” the Reset pin active after V_{DD} rises above $V_{TRIP} + V_{HYS}$	

Note 1: Shaded rows are custom ordered time outs.

Figure 4-15 illustrates when the Reset delay timer (t_{RST}) is active or inactive.

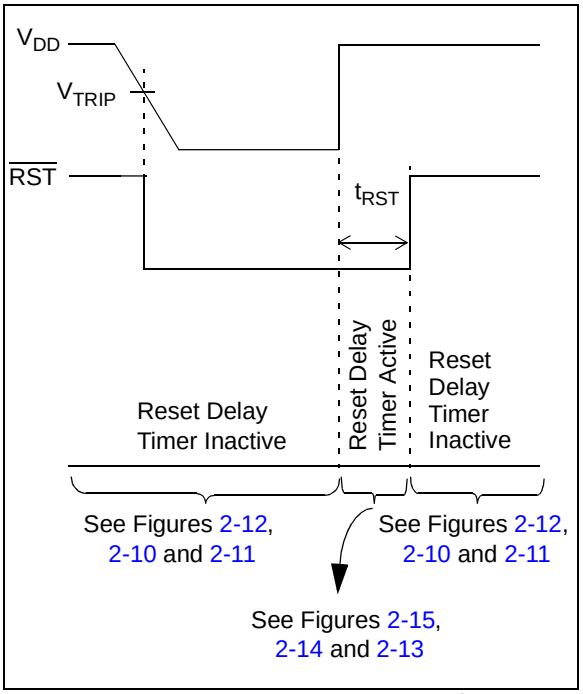

FIGURE 4-15: *Reset Power-up Timer Waveform.*

4.2.1 EFFECT OF TEMPERATURE ON RESET POWER-UP TIMER (T_{RPU})

The Reset delay timer time-out period (t_{RST}) determines how long the device remains in the Reset condition. This time-out is affected by both the device V_{DD} and temperature. Typical responses for different V_{DD} values and temperatures are shown in Figures 2-33, 2-32 and 2-31.

© 2005-2012 Microchip Technology Inc.

4.3 Negative Going V_{DD} Transients

The minimum pulse width (time) required to cause a Reset may be an important criteria in the implementation of a Power-on Reset (POR) circuit. This time is referred to as transient duration. The MCP131X/2X devices are designed to reject a level of negative-going transients (glitches) on the power supply line.

Transient duration is the amount of time needed for these supervisory devices to respond to a drop in V_{DD}. The transient duration time (t_{TRAN}) is dependant on the magnitude of $V_{TRIP} – V_{DD}$ (overdrive). Any combination of duration and overdrive that lies under the duration/overdrive curve will not generate a Reset signal. Generally speaking, the transient duration time decreases with, and increases in, the $V_{TRIP} – V_{DD}$ voltage. Combinations of duration and overdrive that lie above the duration/overdrive curve are detected as a brown-out or power-down condition.

Figure 4-16 shows a typical transient duration versus Reset comparator overdrive, for which the MCP131X/2X will not generate a Reset pulse. It shows that the farther below the trip point the transient pulse goes, the duration of the pulse required to cause a Reset gets shorter. Figure 4-16 shows the transient response characteristics for the MCP131X/2X.

Transient immunity can be improved by adding a bypass capacitor (typically 0.1 µF) as close as possible to the V_{DD} pin of the MCP131X/2X device.

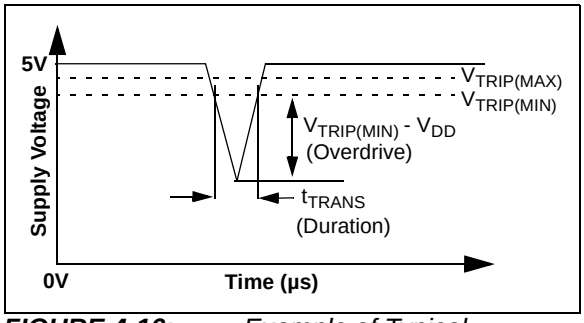

FIGURE 4-16: *Example of Typical Transient Duration Waveform.*

4.4 Manual Reset Input

The Manual Reset input pin ($\overline{MR}$) allows the Reset pins (RST/$\overline{RST}$) to be manually forced to their active states. The $\overline{MR}$ pin has circuitry to filter noise pulses that may be present on the pin. Figure 4-17 shows a block diagram for using the MCP131X/2X with a push-button switch. To minimize the required external components, the $\overline{MR}$ input has an internal pull-up resistor.

A mechanical push button or active logic signal can drive the $\overline{MR}$ input.

Once $\overline{MR}$ has been low for a time, t_{MRD} (the Manual Reset delay time), the Reset output pins are forced active. The Reset output pins will remain in their active states for the Reset delay timer time-out period (t_{RST}).

Figure 4-18 shows a waveform for the Manual Reset switch input and the Reset pins output.

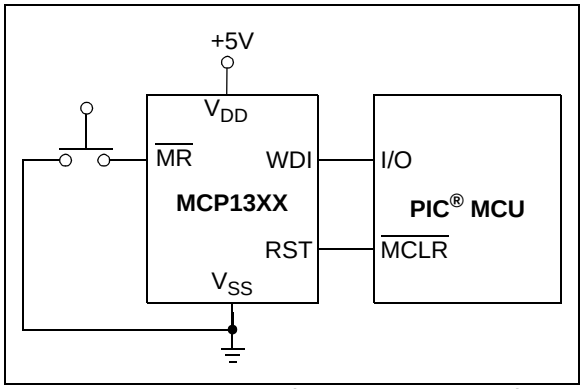

FIGURE 4-17: *Push Button Reset and Watchdog Timer.*

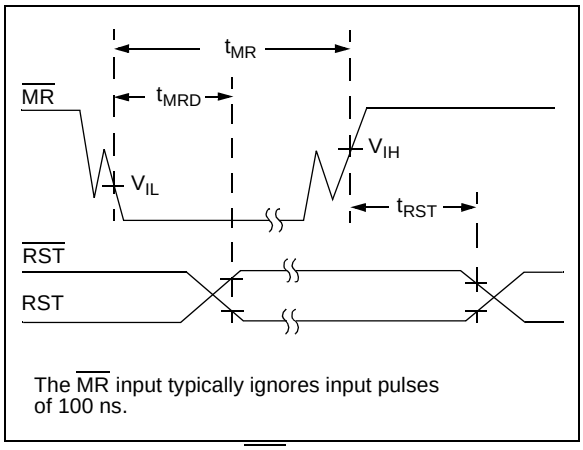

FIGURE 4-18: *$\overline{MR}$ Input – Push Button.*

4.4.1 NOISE FILTER

The noise filter filters out noise spikes (glitches) on the Manual Reset pin ($\overline{MR}$). Noise spikes less than 100 ns (typical) are filtered.

4.5 Watchdog Timer

The purpose of the Watchdog Timer (WDT) is to increase system reliability. The Watchdog Timer feature can be used to detect when the Host Controller's program flow is not as expected. The Watchdog Timer monitors for activity on the Watchdog Input pin (WDI). The WDI pin is expected to be strobed within a given time frame. When this time frame is exceeded, without an edge transition on the WDI pin, the Reset pin is driven active to reset the system. This stops the Host Controller from continuing its erratic behavior ("run-away" code execution).

The Watchdog Timer is external to the main portion of the control system and monitors the operation of the system. This feature is enabled by a falling edge on the WDI pin (after device POR). Monitoring is then done by requiring the embedded controller to force an edge transition (falling or rising) on the WDI pin ("pet the Watchdog") within a predetermined time frame (T_{WD}). If the MCP131X/2X does not detect an edge on the WDI pin within the expected time frame, the MCP131X/2X device will force the Reset pin active.

The Watchdog Timer is in the disabled state when:

- The Device Powers up
- A POR event occurred
- A WDT event occurred
- A Manual Reset ($\overline{MR}$) event occurred

When the Watchdog Timer is in the disabled state, the WDI pin has an internal smart pull-up resistor enabled. This pull-up resistor has a typical value of 52 kΩ. This pull-up resistor holds the WDI signal in the high state, until it is forced to another state.

After the embedded controller has initialized, if the Watchdog Timer feature is to be used, then the embedded controller can force the WDI pin low (V_{IL}). This also enables the Watchdog Timer feature and disables the WDI pull-up resistor. Disabling the pull-up resistor reduces the device's current consumption. The pull-up resistor will remain disconnected until the device has a power-on, a Reset event occurs, or after the WDT time out.

Once the Watchdog Timer has been enabled, the Host Controller must force an edge transition (falling or rising) on the WDI pin before the minimum Watchdog Timer time out to ensure that the Watchdog Timer does not force the Reset pins (RST/$\overline{RST}$) to the active state.

If an edge transition does not occur before the maximum time out occurs, then the MCP131X/2X will force the Reset pins to their active state.

The MCP131X/2X supports four time outs. The standard offering devices have a typical Watchdog Timer period (T_{WDT}) of 1.6 s. Table 4-3 shows the available Watchdog Timer periods. The t_{WDT} time-out is a function of the device voltage and temperature.

Figure 4-19 shows a block diagram for using the MCP131X/2X with a PIC® microcontroller (MCU) and the Watchdog input.

TABLE 4-3: WATCHDOG TIMER PERIODS (1)

t_{WDT}			Units
Min	Typ	Max	
4.3	6.3	9.3	ms
71	102	153	ms
1.12	1.6	2.4	sec
17.9	25.6	38.4	sec
↑ If the time between WDI edges is less than this, it ensures that the MCP131X/2X **never** forces a Reset		↑ If the time between WDI edges is greater than this, it ensures that the MCP131X/2X **always** forces a Reset	

Note 1: Shaded rows are custom ordered Watchdog Timer Periods (t_{WDT}) time outs. For information on ordering devices with these t_{WDT} time outs, please contact your local Microchip sales office. Minimum purchase volumes are required.

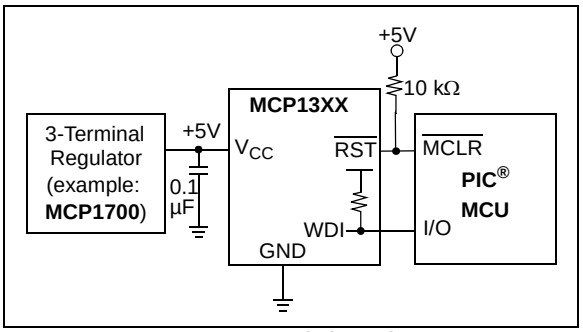

FIGURE 4-19: *Watchdog Timer.*

The software routine that strobes WDI is critical. The code must be in a section of software that is executed frequently enough so the time between edge transitions is less than the Watchdog time-out period. One common technique controls the Host Controllers I/O line from two sections of the program. The software might set the I/O line high while operating in the Foreground mode and set it low while in the Background or Interrupt modes. If both modes do not execute correctly, the Watchdog Timer issues Reset pulses.

© 2005-2012 Microchip Technology Inc.

5.0 APPLICATION INFORMATION

This section shows application-related information that may be useful for your particular design requirements.

5.1 Supply Monitor Noise Sensitivity

The MCP131X/2X devices are optimized for fast response to negative-going changes in V_{DD}. Systems with an inordinate amount of electrical noise on V_{DD} (such as systems using relays) may require a 0.01 µF or 0.1 µF bypass capacitor to reduce detection sensitivity. This capacitor should be installed as close to the MCP131X/2X as possible to keep the capacitor lead length short.

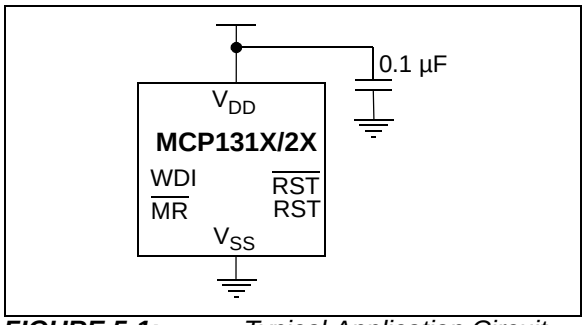

FIGURE 5-1: *Typical Application Circuit with Bypass Capacitor.*

5.2 Conventional Voltage Monitoring

Figure 5-2 and Figure 5-3 show the MCP131X/2X in conventional voltage monitoring applications.

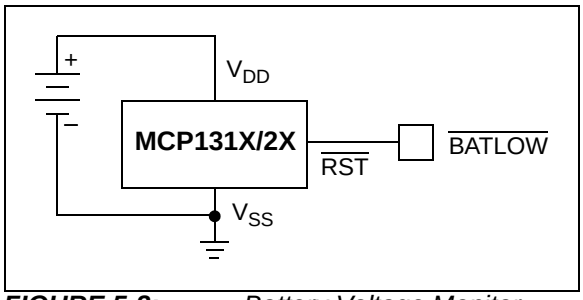

FIGURE 5-2: *Battery Voltage Monitor.*

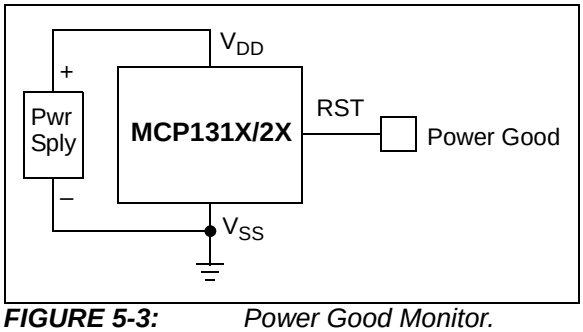

FIGURE 5-3: *Power Good Monitor.*

5.3 Using in PIC® Microcontroller, ICSP™ Applications

Note:	This operation can only be done using the device with the Open-Drain $\overline{RST}$ pin (MCP1320, MCP1321, and MCP1322). Devices that have the internal pull-up resistor are not recommended due to the current path of the internal pull-up resistor.

Figure 5-4 shows the typical application circuit for using the MCP132X for a voltage supervisory function when the PIC® microcontroller will be programmed via the In-Circuit Serial Programming™ (ICSP™) feature. Additional information is available in TB087, *"Using Voltage Supervisors with PIC® Microcontroller Systems which Implement In-Circuit Serial Programming™"* (DS91087).

Note:	It is recommended that the current into the $\overline{RST}$ pin be current limited by a 1 kΩ resistor.

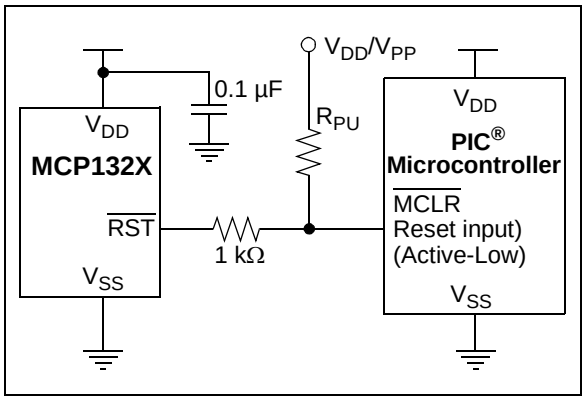

FIGURE 5-4: *Typical Application Circuit for PIC® Microcontroller with the ICSP™ Feature.*

5.4 Modifying The Trip Point, V_{TRIP}

Although the MCP131X/2X device has a fixed voltage trip point (V_{TRIP}), it is sometimes necessary to make custom adjustments. This can be accomplished by connecting an external resistor divider to the MCP131X/2X V_{DD} pin. This causes the V_{SOURCE} voltage to be at a higher voltage than when the MCP131X/2X input equals its V_{TRIP} voltage (Figure 5-5).

To maintain detector accuracy, the bleeder current through the divider should be significantly higher than the 10 µA maximum operating current required by the MCP131X/2X. A reasonable value for this bleeder current is 1 mA (100 times the 10 µA required by the MCP131X/2X). For example, if V_{TRIP} = 2V and the desired trip point is 2.5V, the value of $R_1 + R_2$ is 2.5 kΩ (2.5V/1 mA). The value of $R_1 + R_2$ can be rounded to the nearest standard value and plugged into the equation of Figure 5-5 to calculate values for R_1 and R_2. 1% tolerance resistors are recommended.

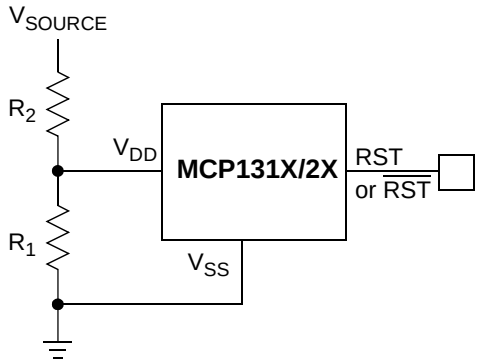

$$V_{SOURCE} \times \frac{R_1}{R_1 + R_2} = V_{TRIP}$$

Where:

V_{SOURCE} = Voltage to be monitored

V_{TRIP} = Threshold Voltage setting

Note: In this example, V_{SOURCE} must be greater than (V_{TRIP})

FIGURE 5-5: *Modify Trip-Point using External Resistor Divider.*

5.5 MOSFET Low-Drive Protection

Low operating power and small physical size make the MCP131X/2X series ideal for many voltage detector applications. Figure 5-6 shows a low-voltage gate drive protection circuit that prevents overheating of the logic-level MOSFET due to insufficient gate voltage. When the input signal is below the threshold of the MCP131X/2X, its output grounds the gate of the MOSFET.

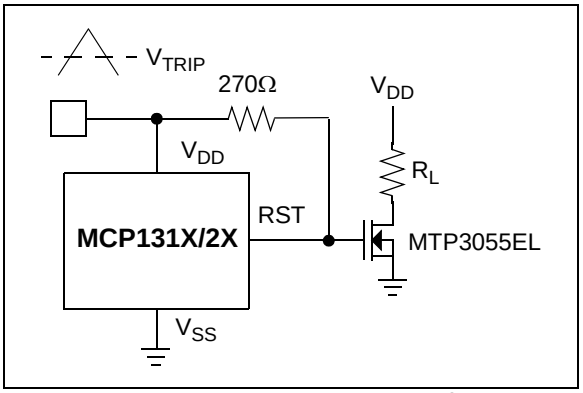

FIGURE 5-6: *MOSFET Low-Drive Protection.*

5.6 Low-Power Applications

In some low-power applications, the longer the microcontroller (such as a PIC® MCU) can be in the "Sleep mode", the lower the average system current consumption will be.

The WDT feature can be used to "wake-up" the PIC MCU at a regular interval to service the required tasks before returning to sleep. This "wake-up" occurs after the PIC MCU detects a $\overline{MCLR}$ reset during Sleep mode (for mid-range family; $\overline{POR}$ = 1, $\overline{BOR}$ = 1, $\overline{TO}$ = 1, and $\overline{PD}$ = 1).

© 2005-2012 Microchip Technology Inc.

5.7 Controllers and Processors With Bidirectional I/O Pins

Some microcontrollers have bidirectional Reset pins. Depending on the current drive capability of the controller pin, an indeterminate logic level may result if there is a logic conflict. This can be avoided by adding a 4.7 kΩ resistor in series with the output of the MCP131X/2X (Figure 5-7). If there are other components in the system that require a Reset signal, they should be buffered so as not to load the Reset line. If the other components are required to follow the Reset I/O of the microcontroller, the buffer should be connected as shown with the solid line.

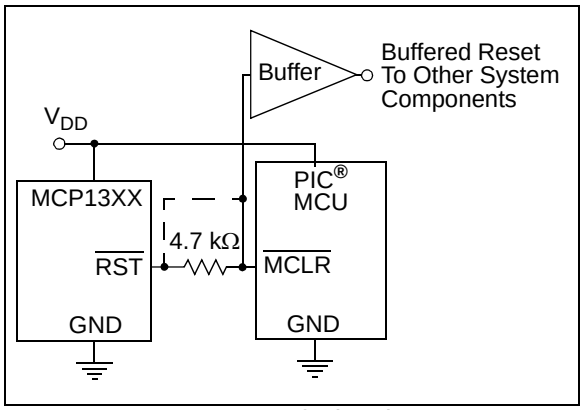

FIGURE 5-7: *Interfacing the MCP131X/2X Push-Pull Outputs to a Bidirectional Reset I/O.*

5.8 $\overline{\text{RESET}}$ Signal Integrity During Power-Down

The MCP131X/2X Reset output is valid to V_{DD} = 1.0V. Below this 1.0V, the output becomes an "open circuit" and does not sink or source current. This means CMOS logic inputs to the microcontroller will be floating at an undetermined voltage. Most digital systems are completely shut down well above this voltage. However, in situations where the Reset signal must be maintained valid to V_{DD} = 0V, external circuitry is required.

For devices where the Reset signal is active-low, a pull-down resistor must be connected from the MCP131X/2X Reset pin(s) to ground to discharge stray capacitances and hold the output low (Figure 5-8).

Similarly, for devices where the Reset signal is active-high, a pull-up resistor to V_{DD} is required to ensure a valid high Reset signal for V_{DD} below 1.0V.

This resistor value, though not critical, should be chosen such that it does not appreciably load the Reset pin(s) under normal operation (100 kΩ will be suitable for most applications).

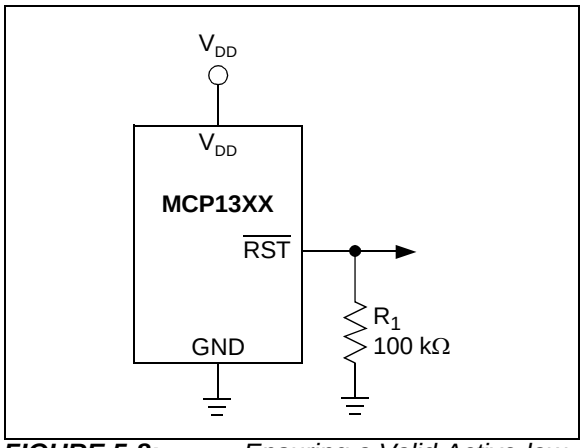

FIGURE 5-8: *Ensuring a Valid Active-low Reset Pin Output State as V_{DD} Approaches 0V.*

NOTES:

© 2005-2012 Microchip Technology Inc.

6.0 STANDARD DEVICE OFFERINGS

Table 6-1 shows the standard devices that are available and their respective configuration. The configuration includes:

- Voltage Trip Point (V_{TRIP})
- Reset Time Out (t_{RST})
- Watchdog Time Out (t_{WDT})

Table 6-1 also shows the order number for that given device configuration.

6.1 Custom Configurations

Table 6-2 shows the codes that specify the desired Reset time out (t_{RST}) and Watchdog Timer time-out (t_{WDT}) for custom devices.

The voltage trip point (V_{TRIP}) is specified by the two digits of the desired typical trip point voltage. As an example, if the desired V_{TRIP} selection has a typical V_{TRIP} of 2.7V, the code is 27.

TABLE 6-1: STANDARD VERSIONS

Device	Reset Threshold (V)	Reset Time Out (ms)		Watchdog Time Out (s)		Order Number
		Minimum	Typical	Minimum	Typical	
MCP1316	2.90	140	200	1.12	1.6	MCP1316T-29LE/OT
MCP1316	4.60	140	200	1.12	1.6	MCP1316T-46LE/OT
MCP1316M	2.90	140	200	1.12	1.6	MCP1316MT-29LE/OT
MCP1316M	4.60	140	200	1.12	1.6	MCP1316MT-46LE/OT
MCP1317	2.90	140	200	1.12	1.6	MCP1317T-29LE/OT
MCP1317	4.60	140	200	1.12	1.6	MCP1317T-46LE/OT
MCP1318	2.90	140	200	1.12	1.6	MCP1318T-29LE/OT
MCP1318	4.60	140	200	1.12	1.6	MCP1318T-46LE/OT
MCP1318M	2.90	140	200	1.12	1.6	MCP1318MT-29LE/OT
MCP1318M	4.60	140	200	1.12	1.6	MCP1318MT-46LE/OT
MCP1319	2.90	140	200	—	—	MCP1319T-29LE/OT
MCP1319	4.60	140	200	—	—	MCP1319T-46LE/OT
MCP1319M	2.90	140	200	—	—	MCP1319MT-29LE/OT
MCP1319M	4.60	140	200	—	—	MCP1319MT-46LE/OT
MCP1320	2.90	140	200	1.12	1.6	MCP1320T-29LE/OT
MCP1320	4.60	140	200	1.12	1.6	MCP1320T-46LE/OT
MCP1321	2.90	140	200	1.12	1.6	MCP1321T-29LE/OT
MCP1321	4.60	140	200	1.12	1.6	MCP1321T-46LE/OT
MCP1322	2.90	140	200	—	—	MCP1322T-29LE/OT
MCP1322	4.60	140	200	—	—	MCP1322T-46LE/OT

TABLE 6-2: DELAY TIME-OUT ORDERING CODES

Code	Typical Delay Time (ms)		Comment	Code	Typical Delay Time (ms)		Comment
	Reset	WDT			Reset	WDT	
A	1.6	6.3	Note 1	J	200.0	6.3	Note 1
B	1.6	102.0	Note 1	K	200.0	102.0	Note 1
C	1.6	1600.0	Note 1	L	200.0	1600.0	Delay timings for standard device offerings
D	1.6	25600.0	Note 1	M	200.0	25600.0	Note 1
E	30.0	6.3	Note 1	N	1600.0	6.3	Note 1
F	30.0	102.0	Note 1	P	1600.0	102.0	Note 1
G	30.0	1600.0	Note 1	Q	1600.0	1600.0	Note 1
H	30.0	25600.0	Note 1	R	1600.0	25600.0	Note 1

Note 1: This delay timing combination is not the standard offering. For information on ordering devices with these delay times, contact your local Microchip sales office. Minimum purchase volumes are required.

© 2005-2012 Microchip Technology Inc.

NOTES:

© 2005-2012 Microchip Technology Inc.

7.0 DEVELOPMENT TOOLS

7.1 Evaluation/Demonstration Boards

The SOT-23-5/6 Evaluation Board (VSUPEV2) can be used to evaluate the characteristics of the MCP131X/2X devices.

This blank PCB has footprints for:

- Pull-up Resistor
- Pull-down Resistor
- Loading Capacitor
- In-line Resistor

There is also a power supply filtering capacitor.

For evaluating the MCP131X/2X devices, the selected device should be installed into the Option A footprint.

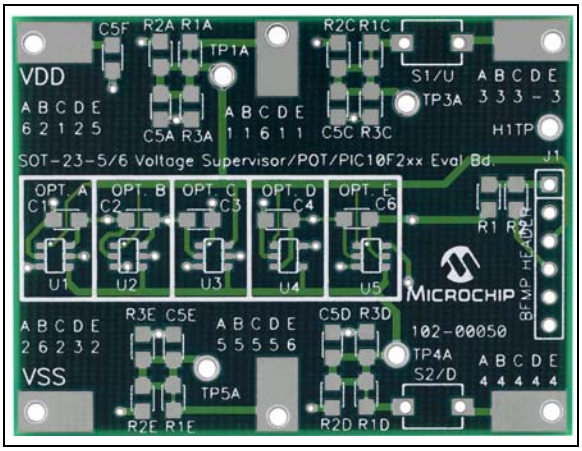

FIGURE 1: *SOT-23-5/6 Voltage Supervisor Evaluation Board (VSUPEV2).*

This board may be purchased directly from the Microchip web site at www.microchip.com.

NOTES:

© 2005-2012 Microchip Technology Inc.

8.0 PACKAGING INFORMATION

8.1 Package Marking Information

5-Pin SOT-23

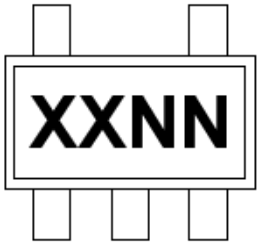

Part Number	SOT-23
MCP1316T-29LE/OT	QANN
MCP1316MT-29LE/OT	QBNN
MCP1317T-29LE/OT	QCNN
MCP1318T-29LE/OT	QDNN
MCP1318MT-29LE/OT	QENN
MCP1319T-29LE/OT	QFNN
MCP1319MT-29LE/OT	QGNN
MCP1320T-29LE/OT	QHNN
MCP1321T-29LE/OT	QJNN
MCP1322T-29LE/OT	QKNN
MCP1316T-46LE/OT	QLNN
MCP1316MT-46LE/OT	QMNN
MCP1317T-46LE/OT	QPNN
MCP1318T-46LE/OT	QQNN
MCP1318MT-46LE/OT	QRNN
MCP1319T-46LE/OT	QSNN
MCP1319MT-46LE/OT	QTNN
MCP1320T-46LE/OT	QUNN
MCP1321T-46LE/OT	QVNN
MCP1322T-46LE/OT	QWNN

Example:

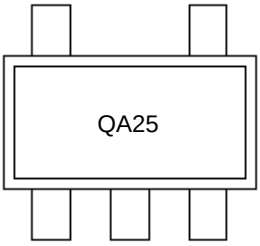

Legend:	XX...X	Customer-specific information
	Y	Year code (last digit of calendar year)
	YY	Year code (last 2 digits of calendar year)
	WW	Week code (week of January 1 is week ‘01’)
	NNN	Alphanumeric traceability code
	(e3)	Pb-free JEDEC designator for Matte Tin (Sn)
	*	This package is Pb-free. The Pb-free JEDEC designator ((e3)) can be found on the outer packaging for this package.

Note: In the event the full Microchip part number cannot be marked on one line, it will be carried over to the next line, thus limiting the number of available characters for customer-specific information.

5-Lead Plastic Small Outline Transistor (OT) [SOT-23]

Note: For the most current package drawings, please see the Microchip Packaging Specification located at http://www.microchip.com/packaging

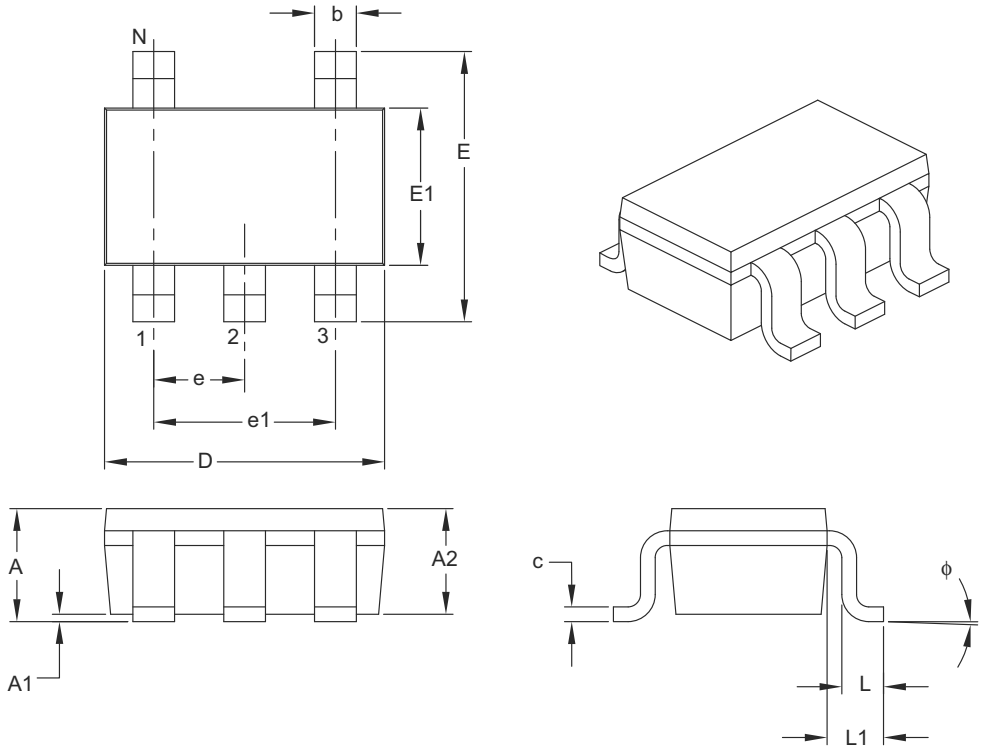

Units		MILLIMETERS		
Dimension Limits		MIN	NOM	MAX
Number of Pins	N	5		
Lead Pitch	e	0.95 BSC		
Outside Lead Pitch	e1	1.90 BSC		
Overall Height	A	0.90	–	1.45
Molded Package Thickness	A2	0.89	–	1.30
Standoff	A1	0.00	–	0.15
Overall Width	E	2.20	–	3.20
Molded Package Width	E1	1.30	–	1.80
Overall Length	D	2.70	–	3.10
Foot Length	L	0.10	–	0.60
Footprint	L1	0.35	–	0.80
Foot Angle	ϕ	0°	–	30°
Lead Thickness	c	0.08	–	0.26
Lead Width	b	0.20	–	0.51

Notes:

1. Dimensions D and E1 do not include mold flash or protrusions. Mold flash or protrusions shall not exceed 0.127 mm per side.
2. Dimensioning and tolerancing per ASME Y14.5M.

   BSC: Basic Dimension. Theoretically exact value shown without tolerances.

Microchip Technology Drawing C04-091B

© 2005-2012 Microchip Technology Inc.

5-Lead Plastic Small Outline Transistor (OT) [SOT-23]

Note: For the most current package drawings, please see the Microchip Packaging Specification located at http://www.microchip.com/packaging

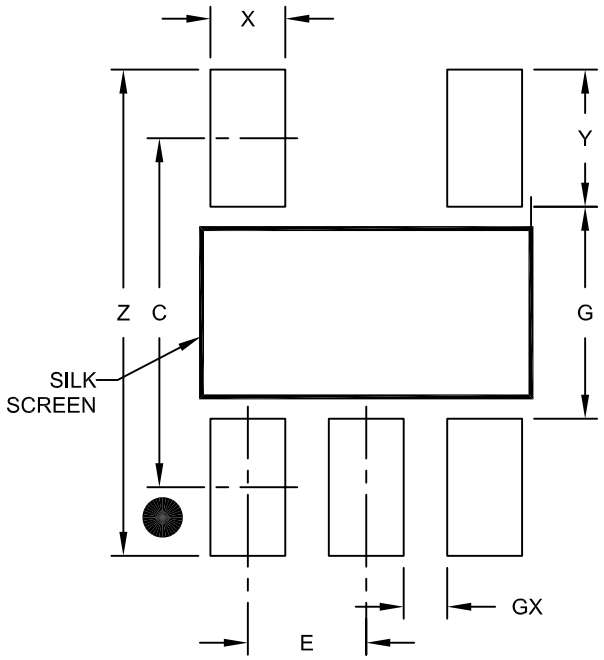

RECOMMENDED LAND PATTERN

Units		MILLIMETERS		
Dimension Limits		MIN	NOM	MAX
Contact Pitch	E		0.95 BSC	
Contact Pad Spacing	C		2.80	
Contact Pad Width (X5)	X			0.60
Contact Pad Length (X5)	Y			1.10
Distance Between Pads	G	1.70		
Distance Between Pads	GX	0.35		
Overall Width	Z			3.90

Notes:

1. Dimensioning and tolerancing per ASME Y14.5M

   BSC: Basic Dimension. Theoretically exact value shown without tolerances.

Microchip Technology Drawing No. C04-2091A

8.2 Product Tape and Reel Specifications

FIGURE 8-1: EMBOSSED CARRIER DIMENSIONS (8 MM TAPE ONLY)

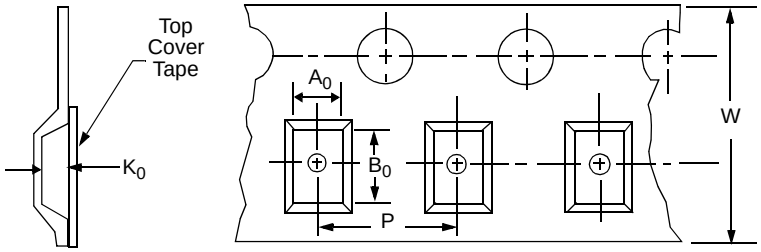

TABLE 8-1: CARRIER TAPE/CAVITY DIMENSIONS

Case Outline	Package Type		Carrier Dimensions		Cavity Dimensions			Output Quantity Units	Reel Diameter in mm
			W mm	P mm	A0 mm	B0 mm	K0 mm		
OT	SOT-23	3L	8	4	3.23	3.17	1.37	3000	180

FIGURE 8-2: 5-LEAD SOT-23 DEVICE TAPE AND REEL SPECIFICATIONS

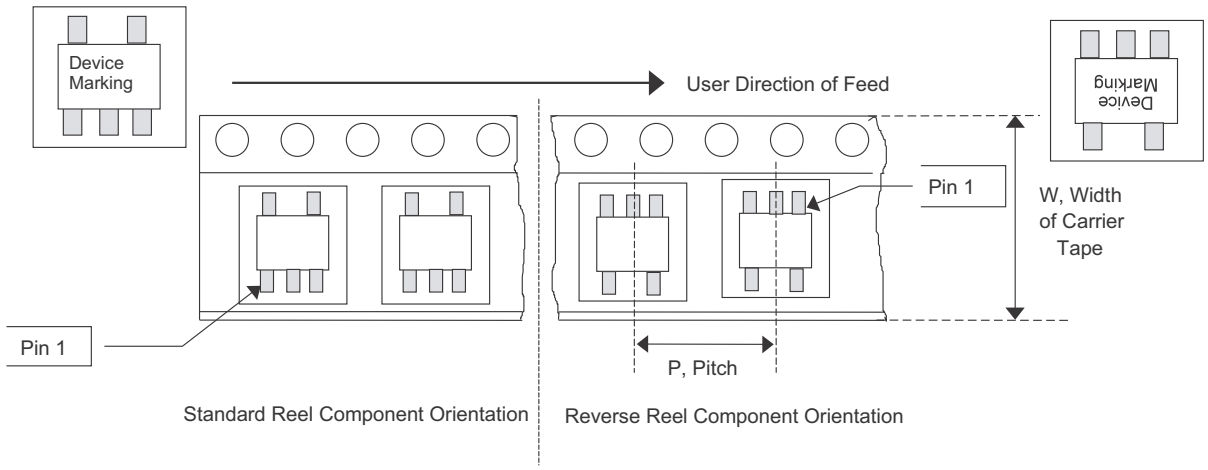

© 2005-2012 Microchip Technology Inc.

APPENDIX A: REVISION HISTORY

Revision D (August 2012)

The following is the list of modifications:

1. Updated Figure 2-22 and Figure 2-23.

Revision C (February 2012)

The following is the list of modifications:

1. Updated package temperature in the **Temperature Characteristics** table.
2. Corrected text in **Section 4.0, Operational Description**.
3. Updated package specification in **Section 8.0, Packaging Information** to show all drawings available.
4. Other minor typographical corrections.

Revision B (October 2007)

The following is the list of modifications:

1. Clarified that devices with a Voltage Trip Point ≤ 2.4V are tested from -40°C to + 85°C. Devices with a Voltage Trip Point ≥ 2.5V are tested from -40°C to +125°C.

Revision A (November 2005)

- Original Release of this Document.

NOTES:

© 2005-2012 Microchip Technology Inc.

PRODUCT IDENTIFICATION SYSTEM

To order or obtain information, e.g., on pricing or delivery, refer to the factory or the listed sales office.

PART NO.	X	XX	X	X	/	XX
Device	Tape/Reel Option	V_{TRIP} Options	Time-Out Options	Temperature Range		Package

Device:

MCP1316T:	MicroPower Voltage Detector (Tape and Reel)
MCP1316MT:	MicroPower Voltage Detector (Tape and Reel)
MCP1317T:	MicroPower Voltage Detector (Tape and Reel)
MCP1318T:	MicroPower Voltage Detector (Tape and Reel)
MCP1318MT:	MicroPower Voltage Detector (Tape and Reel)
MCP1319T:	MicroPower Voltage Detector (Tape and Reel)
MCP1319MT:	MicroPower Voltage Detector (Tape and Reel)
MCP1320T:	MicroPower Voltage Detector (Tape and Reel)
MCP1321T:	MicroPower Voltage Detector (Tape and Reel)
MCP1322T:	MicroPower Voltage Detector (Tape and Reel)

V_{TRIP} Options: (Note 1)
29 = 2.90V
46 = 4.60V

Time-Out Options: (Note 1)
L = t_{RST} = 200 ms (typ.), t_{WDT} = 1.6 s (typ.)

Temperature Range:
I = -40°C to +85°C (Only for trip points 2.0V to 2.4V)
E = -40°C to +125°C (For trip point ≥ 2.5V)

Package:
OT = SOT-23, 5-lead

Note 1: Custom ordered voltage trip points and time outs available. Please contact your local Microchip sales office for additional information. Minimum purchase volumes are required.

Examples:

a)	MCP1316T-29LE/OT:	5-Lead SOT-23-5
b)	MCP1316T-46LE/OT:	5-Lead SOT-23-5
c)	MCP1316MT-29LE/OT:	5-Lead SOT-23-5
d)	MCP1316MT-46LE/OT:	5-Lead SOT-23-5
a)	MCP1317T-29LE/OT:	5-Lead SOT-23-5
b)	MCP1317T-46LE/OT:	5-Lead SOT-23-5
a)	MCP1318T-29LE/OT:	5-Lead SOT-23-5
b)	MCP1318MT-29LE/OT:	5-Lead SOT-23-5
c)	MCP1318T-46LE/OT:	5-Lead SOT-23-5
d)	MCP1318MT-46LE/OT:	5-Lead SOT-23-5
a)	MCP1319T-29LE/OT:	5-Lead SOT-23-5
b)	MCP1318MT-29LE/OT:	5-Lead SOT-23-5
c)	MCP1319T-46LE/OT:	5-Lead SOT-23-5
d)	MCP1318MT-46LE/OT:	5-Lead SOT-23-5
a)	MCP1320T-29LE/OT:	5-Lead SOT-23-5
b)	MCP1320T-46LE/OT:	5-Lead SOT-23-5
a)	MCP1321T-29LE/OT:	5-Lead SOT-23-5
b)	MCP1321T-46LE/OT:	5-Lead SOT-23-5
a)	MCP1322T-29LE/OT:	5-Lead SOT-23-5
b)	MCP1322T-46LE/OT:	5-Lead SOT-23-5

NOTES:

© 2005-2012 Microchip Technology Inc.

Note the following details of the code protection feature on Microchip devices:

- Microchip products meet the specification contained in their particular Microchip Data Sheet.
- Microchip believes that its family of products is one of the most secure families of its kind on the market today, when used in the intended manner and under normal conditions.
- There are dishonest and possibly illegal methods used to breach the code protection feature. All of these methods, to our knowledge, require using the Microchip products in a manner outside the operating specifications contained in Microchip's Data Sheets. Most likely, the person doing so is engaged in theft of intellectual property.
- Microchip is willing to work with the customer who is concerned about the integrity of their code.
- Neither Microchip nor any other semiconductor manufacturer can guarantee the security of their code. Code protection does not mean that we are guaranteeing the product as "unbreakable."

Code protection is constantly evolving. We at Microchip are committed to continuously improving the code protection features of our products. Attempts to break Microchip's code protection feature may be a violation of the Digital Millennium Copyright Act. If such acts allow unauthorized access to your software or other copyrighted work, you may have a right to sue for relief under that Act.

Information contained in this publication regarding device applications and the like is provided only for your convenience and may be superseded by updates. It is your responsibility to ensure that your application meets with your specifications. MICROCHIP MAKES NO REPRESENTATIONS OR WARRANTIES OF ANY KIND WHETHER EXPRESS OR IMPLIED, WRITTEN OR ORAL, STATUTORY OR OTHERWISE, RELATED TO THE INFORMATION, INCLUDING BUT NOT LIMITED TO ITS CONDITION, QUALITY, PERFORMANCE, MERCHANTABILITY OR FITNESS FOR PURPOSE**.** Microchip disclaims all liability arising from this information and its use. Use of Microchip devices in life support and/or safety applications is entirely at the buyer's risk, and the buyer agrees to defend, indemnify and hold harmless Microchip from any and all damages, claims, suits, or expenses resulting from such use. No licenses are conveyed, implicitly or otherwise, under any Microchip intellectual property rights.

QUALITY MANAGEMENT SYSTEM
CERTIFIED BY DNV
= ISO/TS 16949 =

Trademarks

The Microchip name and logo, the Microchip logo, dsPIC, KEELOQ, KEELOQ logo, MPLAB, PIC, PICmicro, PICSTART, PIC32 logo, rfPIC and UNI/O are registered trademarks of Microchip Technology Incorporated in the U.S.A. and other countries.

FilterLab, Hampshire, HI-TECH C, Linear Active Thermistor, MXDEV, MXLAB, SEEVAL and The Embedded Control Solutions Company are registered trademarks of Microchip Technology Incorporated in the U.S.A.

Analog-for-the-Digital Age, Application Maestro, BodyCom, chipKIT, chipKIT logo, CodeGuard, dsPICDEM, dsPICDEM.net, dsPICworks, dsSPEAK, ECAN, ECONOMONITOR, FanSense, HI-TIDE, In-Circuit Serial Programming, ICSP, Mindi, MiWi, MPASM, MPLAB Certified logo, MPLIB, MPLINK, mTouch, Omniscient Code Generation, PICC, PICC-18, PICDEM, PICDEM.net, PICkit, PICtail, REAL ICE, rfLAB, Select Mode, Total Endurance, TSHARC, UniWinDriver, WiperLock and ZENA are trademarks of Microchip Technology Incorporated in the U.S.A. and other countries.

SQTP is a service mark of Microchip Technology Incorporated in the U.S.A.

All other trademarks mentioned herein are property of their respective companies.

© 2012, Microchip Technology Incorporated, Printed in the U.S.A., All Rights Reserved.

Printed on recycled paper.

ISBN: 978-1-62076-513-5

Microchip received ISO/TS-16949:2009 certification for its worldwide headquarters, design and wafer fabrication facilities in Chandler and Tempe, Arizona; Gresham, Oregon and design centers in California and India. The Company's quality system processes and procedures are for its PIC® MCUs and dsPIC® DSCs, KEELOQ® code hopping devices, Serial EEPROMs, microperipherals, nonvolatile memory and analog products. In addition, Microchip's quality system for the design and manufacture of development systems is ISO 9001:2000 certified.

Worldwide Sales and Service

AMERICAS

Corporate Office
2355 West Chandler Blvd.
Chandler, AZ 85224-6199
Tel: 480-792-7200
Fax: 480-792-7277
Technical Support:
http://www.microchip.com/support
Web Address:
www.microchip.com

Atlanta
Duluth, GA
Tel: 678-957-9614
Fax: 678-957-1455

Boston
Westborough, MA
Tel: 774-760-0087
Fax: 774-760-0088

Chicago
Itasca, IL
Tel: 630-285-0071
Fax: 630-285-0075

Cleveland
Independence, OH
Tel: 216-447-0464
Fax: 216-447-0643

Dallas
Addison, TX
Tel: 972-818-7423
Fax: 972-818-2924

Detroit
Farmington Hills, MI
Tel: 248-538-2250
Fax: 248-538-2260

Indianapolis
Noblesville, IN
Tel: 317-773-8323
Fax: 317-773-5453

Los Angeles
Mission Viejo, CA
Tel: 949-462-9523
Fax: 949-462-9608

Santa Clara
Santa Clara, CA
Tel: 408-961-6444
Fax: 408-961-6445

Toronto
Mississauga, Ontario, Canada
Tel: 905-673-0699
Fax: 905-673-6509

ASIA/PACIFIC

Asia Pacific Office
Suites 3707-14, 37th Floor
Tower 6, The Gateway
Harbour City, Kowloon
Hong Kong
Tel: 852-2401-1200
Fax: 852-2401-3431

Australia - Sydney
Tel: 61-2-9868-6733
Fax: 61-2-9868-6755

China - Beijing
Tel: 86-10-8569-7000
Fax: 86-10-8528-2104

China - Chengdu
Tel: 86-28-8665-5511
Fax: 86-28-8665-7889

China - Chongqing
Tel: 86-23-8980-9588
Fax: 86-23-8980-9500

China - Hangzhou
Tel: 86-571-2819-3187
Fax: 86-571-2819-3189

China - Hong Kong SAR
Tel: 852-2401-1200
Fax: 852-2401-3431

China - Nanjing
Tel: 86-25-8473-2460
Fax: 86-25-8473-2470

China - Qingdao
Tel: 86-532-8502-7355
Fax: 86-532-8502-7205

China - Shanghai
Tel: 86-21-5407-5533
Fax: 86-21-5407-5066

China - Shenyang
Tel: 86-24-2334-2829
Fax: 86-24-2334-2393

China - Shenzhen
Tel: 86-755-8203-2660
Fax: 86-755-8203-1760

China - Wuhan
Tel: 86-27-5980-5300
Fax: 86-27-5980-5118

China - Xian
Tel: 86-29-8833-7252
Fax: 86-29-8833-7256

China - Xiamen
Tel: 86-592-2388138
Fax: 86-592-2388130

China - Zhuhai
Tel: 86-756-3210040
Fax: 86-756-3210049

ASIA/PACIFIC

India - Bangalore
Tel: 91-80-3090-4444
Fax: 91-80-3090-4123

India - New Delhi
Tel: 91-11-4160-8631
Fax: 91-11-4160-8632

India - Pune
Tel: 91-20-2566-1512
Fax: 91-20-2566-1513

Japan - Osaka
Tel: 81-66-152-7160
Fax: 81-66-152-9310

Japan - Yokohama
Tel: 81-45-471- 6166
Fax: 81-45-471-6122

Korea - Daegu
Tel: 82-53-744-4301
Fax: 82-53-744-4302

Korea - Seoul
Tel: 82-2-554-7200
Fax: 82-2-558-5932 or
82-2-558-5934

Malaysia - Kuala Lumpur
Tel: 60-3-6201-9857
Fax: 60-3-6201-9859

Malaysia - Penang
Tel: 60-4-227-8870
Fax: 60-4-227-4068

Philippines - Manila
Tel: 63-2-634-9065
Fax: 63-2-634-9069

Singapore
Tel: 65-6334-8870
Fax: 65-6334-8850

Taiwan - Hsin Chu
Tel: 886-3-5778-366
Fax: 886-3-5770-955

Taiwan - Kaohsiung
Tel: 886-7-536-4818
Fax: 886-7-330-9305

Taiwan - Taipei
Tel: 886-2-2500-6610
Fax: 886-2-2508-0102

Thailand - Bangkok
Tel: 66-2-694-1351
Fax: 66-2-694-1350

EUROPE

Austria - Wels
Tel: 43-7242-2244-39
Fax: 43-7242-2244-393

Denmark - Copenhagen
Tel: 45-4450-2828
Fax: 45-4485-2829

France - Paris
Tel: 33-1-69-53-63-20
Fax: 33-1-69-30-90-79

Germany - Munich
Tel: 49-89-627-144-0
Fax: 49-89-627-144-44

Italy - Milan
Tel: 39-0331-742611
Fax: 39-0331-466781

Netherlands - Drunen
Tel: 31-416-690399
Fax: 31-416-690340

Spain - Madrid
Tel: 34-91-708-08-90
Fax: 34-91-708-08-91

UK - Wokingham
Tel: 44-118-921-5869
Fax: 44-118-921-5820

11/29/11

© 2005-2012 Microchip Technology Inc.

Мы молодая и активно развивающаяся компания в области поставок электронных компонентов. Мы поставляем электронные компоненты отечественного и импортного производства напрямую от производителей и с крупнейших складов мира.

Благодаря сотрудничеству с мировыми поставщиками мы осуществляем комплексные и плановые поставки широчайшего спектра электронных компонентов.

Собственная эффективная логистика и склад в обеспечивает надежную поставку продукции в точно указанные сроки по всей России.

Мы осуществляем техническую поддержку нашим клиентам и предпродажную проверку качества продукции. На все поставляемые продукты мы предоставляем гарантию .

Осуществляем поставки продукции под контролем ВП МО РФ на предприятия военно-промышленного комплекса России , а также работаем в рамках 275 ФЗ с открытием отдельных счетов в уполномоченном банке. Система менеджмента качества компании соответствует требованиям ГОСТ ISO 9001.

Минимальные сроки поставки, гибкие цены, неограниченный ассортимент и индивидуальный подход к клиентам являются основой для выстраивания долгосрочного и эффективного сотрудничества с предприятиями радиоэлектронной промышленности, предприятиями ВПК и научно-исследовательскими институтами России.

С нами вы становитесь еще успешнее!

Наши контакты:

Телефон: +7 812 627 14 35

Электронная почта: sales@st-electron.ru

Адрес: 198099, Санкт-Петербург, Промышленная ул, дом № 19, литера Н, помещение 100-Н Офис 331