CY7C68013A, CY7C68014A
CY7C68015A, CY7C68016A

EZ-USB® FX2LP™ USB Microcontroller
High-Speed USB Peripheral Controller

Features

- USB 2.0 USB IF Hi-Speed certified (TID # 40460272)
- Single-chip integrated USB 2.0 transceiver, smart SIE, and enhanced 8051 microprocessor
- Fit-, form-, and function-compatible with the FX2
  - Pin-compatible0
  - Object-code-compatible
  - Functionally compatible (FX2LP is a superset)
- Ultra-low power: I_{CC} no more than 85 mA in any mode
  - Ideal for bus- and battery-powered applications
- Software: 8051 code runs from:
  - Internal RAM, which is downloaded through USB
  - Internal RAM, which is loaded from EEPROM
  - External memory device (128-pin package)
- 16 KB of on-chip code/data RAM
- Four programmable BULK, INTERRUPT, and ISOCHRONOUS endpoints
  - Buffering options: Double, triple, and quad
- Additional programmable (BULK/INTERRUPT) 64-byte endpoint
- 8-bit or 16-bit external data interface
- Smart media standard ECC generation
- GPIF™ (general programmable interface)
  - Enables direct connection to most parallel interfaces
  - Programmable waveform descriptors and configuration registers to define waveforms
  - Supports multiple ready (RDY) inputs and control (CTL) outputs
- Integrated, industry-standard, enhanced 8051
  - 48-MHz, 24-MHz, or 12-MHz CPU operation
  - Four clocks per instruction cycle
  - Two USARTs
  - Three counter/timers
  - Expanded interrupt system
  - Two data pointers
- 3.3-V operation with 5-V tolerant inputs
- Vectored USB interrupts and GPIF/FIFO interrupts
- Separate data buffers for the setup and data portions of a CONTROL transfer
- Integrated I^2C controller; runs at 100 or 400 kHz
- Four integrated FIFOs
  - Integrated glue logic and FIFOs lower system cost
  - Automatic conversion to and from 16-bit buses
  - Master or slave operation
  - Uses external clock or asynchronous strobes
  - Easy interface to ASIC and DSP ICs
- Available in commercial and industrial temperature grades (all packages except VFBGA)

Features (CY7C68013A/14A only)

- CY7C68014A: Ideal for battery-powered applications
  - Suspend current: 100 µA (typ)
- CY7C68013A: Ideal for nonbattery-powered applications
  - Suspend current: 300 µA (typ)
- Available in five Pb-free packages with up to 40 GPIOs
  - 128-pin TQFP (40 GPIOs), 100-pin TQFP (40 GPIOs), 56-pin QFN (24 GPIOs), 56-pin SSOP (24 GPIOs), and 56-pin VFBGA (24 GPIOs)

Features (CY7C68015A/16A only)

- CY7C68016A: Ideal for battery-powered applications
  - Suspend current: 100 µA (typ)
- CY7C68015A: Ideal for nonbattery-powered applications
  - Suspend current: 300 µA (typ)
- Available in Pb-free 56-pin QFN package (26 GPIOs)
- Two more GPIOs than CY7C68013A/14A enabling additional features in the same footprint

For a complete list of related resources, click here.

Errata: For information on silicon errata, see "Errata" on page 64. Details include trigger conditions, devices affected, and proposed workaround.

More Information

Cypress provides a wealth of data at www.cypress.com to help you to select the right device for your design, and to help you to quickly and effectively integrate the device into your design. For a comprehensive list of resources, see the application note AN65209 - Getting Started with FX2LP.

- Overview: USB Portfolio, USB Roadmap
- USB 2.0 Product Selectors: FX2LP, AT2LP, NX2LP-Flex, SX2
- Application notes: Cypress offers a large number of USB application notes covering a broad range of topics, from basic to advanced level. Recommended application notes for getting started with FX2LP are:
  - AN65209 - Getting Started with FX2LP
  - AN15456 - Guide to Successful EZ-USB® FX2LP™ and EZ-USB FX1™ Hardware Design and Debug
  - AN50963 - EZ-USB® FX1™/FX2LP™ Boot Options
  - AN66806 - EZ-USB® FX2LP™ GPIF Design Guide
  - AN61345 - Implementing an FX2LP™- FPGA Interface
  - AN57322 - Interfacing SRAM with FX2LP over GPIF
  - AN4053 - Streaming Data through Isochronous/Bulk Endpoints on EZ-USB® FX2 and EZUSB FX2LP
  - AN63787 - EZ-USB® FX2LP™ GPIF and Slave FIFO Configuration Examples using 8-bit Asynchronous Interface

For complete list of Application notes, click here.

- Code Examples:
  - USB Hi-Speed
- Technical Reference Manual (TRM):
  - EZ-USB FX2LP Technical Reference Manual
- Reference Designs:
  - CY4661 - External USB Hard Disk Drives (HDD) with Fingerprint Authentication Security
  - FX2LP DMB-T/H TV Dongle reference design
- Models: IBIS

EZ-USB FX2LP Development Kit

The CY3684 EZ-USB FX2LP Development Kit is a complete development resource for FX2LP. It provides a platform to develop and test custom projects using FX2LP. The development kit contains collateral materials for the firmware, hardware, and software aspects of a design using FX2LP.

GPIF™ Designer

FX2LP™ General Programmable Interface (GPIF) provides an independent hardware unit, which creates the data and control signals required by an external interface. FX2LP GPIF Designer allows users to create and modify GPIF waveform descriptors for EZ-USB FX2/ FX2LP family of chips using a graphical user interface. Extensive discussion of general GPIF discussion and programming using GPIF Designer is included in *FX2LP Technical Reference Manual* and *GPIF Designer User Guide*, distributed with GPIF Designer. *AN66806 - Getting Started with EZ-USB® FX2LP™ GPIF* can be a good starting point.

Logic Block Diagram

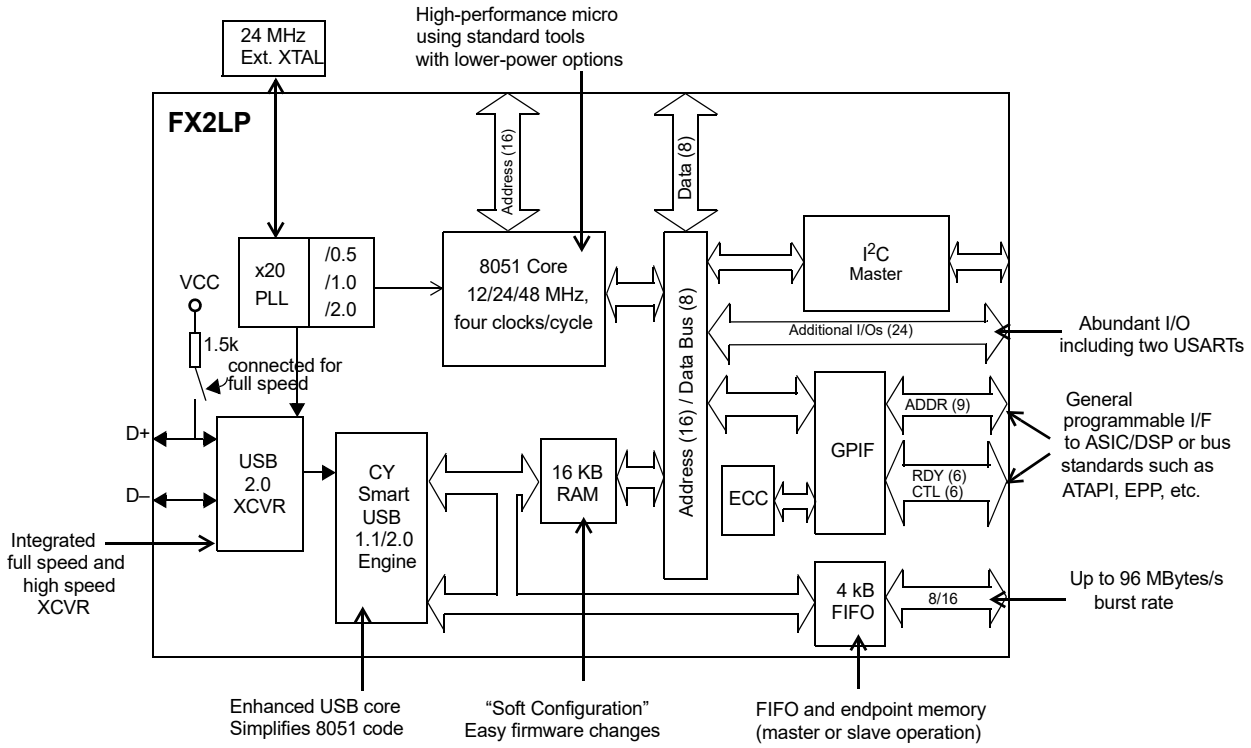

Cypress's EZ-USB® FX2LP™ (CY7C68013A/14A) is a low-power version of the EZ-USB FX2™ (CY7C68013), which is a highly integrated, low-power USB 2.0 microcontroller. By integrating the USB 2.0 transceiver, serial interface engine (SIE), enhanced 8051 microcontroller, and a programmable peripheral interface in a single chip, Cypress has created a cost-effective solution that provides superior time-to-market advantages with low power to enable bus-powered applications.

The ingenious architecture of FX2LP results in data transfer rates of over 53 Mbytes per second (the maximum allowable USB 2.0 bandwidth), while still using a low-cost 8051 microcontroller in a package as small as a 56 VFBGA (5 mm x 5 mm). Because it incorporates the USB 2.0 transceiver, the FX2LP is more economical, providing a smaller-footprint solution than a USB 2.0 SIE or external transceiver implementations.

With EZ-USB FX2LP, the Cypress Smart SIE handles most of the USB 1.1 and 2.0 protocol in hardware, freeing the embedded microcontroller for application-specific functions and decreasing the development time to ensure USB compatibility.

The general programmable interface (GPIF) and Master/Slave Endpoint FIFO (8-bit or 16-bit data bus) provide an easy and glueless interface to popular interfaces such as ATA, UTOPIA, EPP, PCMCIA, and most DSP/processors.

The FX2LP draws less current than the FX2 (CY7C68013), has double the on-chip code/data RAM, and is fit, form, and function compatible with the 56-, 100-, and 128-pin FX2.

Five packages are defined for the family: 56 VFBGA, 56 SSOP, 56 QFN, 100 TQFP, and 128 TQFP.

Contents

Applications **5**
Functional Overview **5**
USB Signaling Speed 5
8051 Microprocessor 5
I^2C Bus 5
Buses 5
Reset and Wakeup 9
Program/Data RAM 10
External FIFO Interface 13
GPIF 14
ECC Generation[8] 14
USB Uploads and Downloads 14
Autopointer Access 15
I^2C Controller 15
CY7C68013A/14A and CY7C68015A/
16A Differences 15
Register Summary **32**
Absolute Maximum Ratings **39**
Operating Conditions **39**
Thermal Characteristics **39**
DC Characteristics **40**
AC Electrical Characteristics **41**
USB Transceiver 41
Program Memory Read 41
Data Memory Read 42
Data Memory Write 43
PORTC Strobe Feature Timings 44
Slave FIFO Synchronous Read 46
Slave FIFO Synchronous Write 48
Ordering Information **56**
Ordering Code Definitions 56
Package Diagrams **57**
Quad Flat Package No Leads (QFN)
Package Design Notes **63**
Acronyms **64**
Document Conventions **64**
Units of Measure 64
Errata **65**
Document History Page **66**
Sales, Solutions, and Legal Information **69**
Worldwide Sales and Design Support 69
Products 69
PSoC® Solutions 69
Cypress Developer Community 69
Technical Support 69

Applications

- Portable video recorder
- MPEG/TV conversion
- DSL modems
- ATA interface
- Memory card readers
- Legacy conversion devices
- Cameras
- Scanners
- Wireless LAN
- MP3 players
- Networking

The “Reference Designs” section of the Cypress web site provides additional tools for typical USB 2.0 applications. Each reference design comes complete with firmware source and object code, schematics, and documentation. Visit www.cypress.com for more information.

Functional Overview

USB Signaling Speed

FX2LP operates at two of the three rates defined in the USB Specification Revision 2.0, dated April 27, 2000:

- Full speed, with a signaling bit rate of 12 Mbps
- High speed, with a signaling bit rate of 480 Mbps

FX2LP does not support the Low Speed signaling mode of 1.5 Mbps.

8051 Microprocessor

The 8051 microprocessor embedded in the FX2LP family has 256 bytes of register RAM, an expanded interrupt system, three timer/counters, and two USARTs.

8051 Clock Frequency

FX2LP has an on-chip oscillator circuit that uses an external 24-MHz (±100 ppm) crystal with the following characteristics:

- Parallel resonant
- Fundamental mode
- 500-µW drive level
- 12-pF (5% tolerance) load capacitors

An on-chip PLL multiplies the 24-MHz oscillator up to 480 MHz, as required by the transceiver/PHY; internal counters divide it down for use as the 8051 clock. The default 8051 clock frequency is 12 MHz. The clock frequency of the 8051 can be changed by the 8051 through the CPUCS register, dynamically.

Figure 1. Crystal Configuration

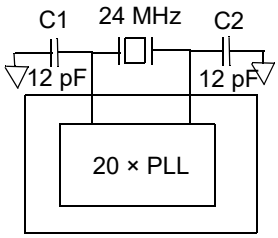

12-pF capacitor values assume a trace capacitance of 3 pF per side on a four-layer FR4 PCA

The CLKOUT pin, which can be three-stated and inverted using internal control bits, outputs the 50% duty cycle 8051 clock, at the selected 8051 clock frequency: 48 MHz, 24 MHz, or 12 MHz.

USARTs

FX2LP contains two standard 8051 USARTs, addressed through Special Function Register (SFR) bits. The USART interface pins are available on separate I/O pins, and are not multiplexed with port pins.

UART0 and UART1 can operate using an internal clock at 230 KBaud with no more than 1% baud rate error. 230 KBaud operation is achieved by an internally derived clock source that generates overflow pulses at the appropriate time. The internal clock adjusts for the 8051 clock rate (48 MHz, 24 MHz, and 12 MHz) such that it always presents the correct frequency for the 230-KBaud operation.[1]

Special Function Registers

Certain 8051 SFR addresses are populated to provide fast access to critical FX2LP functions. These SFR additions are shown in Table 1 on page 6. Bold type indicates nonstandard, enhanced 8051 registers. The two SFR rows that end with “0” and “8” contain bit-addressable registers. The four I/O ports A to D use the SFR addresses used in the standard 8051 for ports 0 to 3, which are not implemented in FX2LP. Because of the faster and more efficient SFR addressing, the FX2LP I/O ports are not addressable in external RAM space (using the MOVX instruction).

I^2C Bus

FX2LP supports the I^2C bus as a master only at 100/400 kHz. SCL and SDA pins have open-drain outputs and hysteresis inputs. These signals must be pulled up to 3.3 V, even if no I^2C device is connected.

Buses

All packages, 8-bit or 16-bit “FIFO” bidirectional data bus, multiplexed on I/O ports B and D. 128-pin package: adds 16-bit output-only 8051 address bus, 8-bit bidirectional data bus.

Note
1. 115-KBaud operation is also possible by programming the 8051 SMOD0 or SMOD1 bits to a “1” for UART0, UART1, or both respectively.

Table 1. Special Function Registers

x	8x	9x	Ax	Bx	Cx	Dx	Ex	Fx
0	**IOA**	**IOB**	**IOC**	**IOD**	SCON1	PSW	ACC	B
1	SP	**EXIF**	**INT2CLR**	**IOE**	SBUF1	–	–	–
2	DPL0	**MPAGE**	**INT4CLR**	**OEA**	–	–	–	–
3	DPH0	–	–	**OEB**	–	–	–	–
4	**DPL1**	–	–	**OEC**	–	–	–	–
5	**DPH1**	–	–	**OED**	–	–	–	–
6	**DPS**	–	–	**OEE**	–	–	–	–
7	PCON	–	–	–	–	–	–	–
8	TCON	SCON0	IE	IP	T2CON	**EICON**	**EIE**	**EIP**
9	TMOD	SBUF0	–	–	–	–	–	–
A	TL0	**AUTOPTRH1**	**EP2468STAT**	**EP01STAT**	RCAP2L	–	–	–
B	TL1	**AUTOPTRL1**	**EP24FIFOFLGS**	**GPIFTRIG**	RCAP2H	–	–	–
C	TH0	**reserved**	**EP68FIFOFLGS**		TL2	–	–	–
D	TH1	**AUTOPTRH2**	–	**GPIFSGLDATH**	TH2	–	–	–
E	**CKCON**	**AUTOPTRL2**	–	**GPIFSGLDATLX**	–	–	–	–
F	–	**reserved**	**AUTOPTRSET-UP**	**GPIFSGLDATLNOX**	–	–	–	–

USB Boot Methods

During the power-up sequence, internal logic checks the I^2C port for the connection of an EEPROM whose first byte is either 0xC0 or 0xC2. If found, it uses the VID/PID/DID values in the EEPROM in place of the internally stored values (0xC0), or it boot-loads the EEPROM contents into internal RAM (0xC2). If no EEPROM is detected, FX2LP enumerates using internally stored descriptors. The default ID values for FX2LP are VID/PID/DID (0x04B4, 0x8613, 0xAxxx where xxx = Chip revision).[2]

Table 2. Default ID Values for FX2LP

Default VID/PID/DID		
Vendor ID	0x04B4	Cypress Semiconductor
Product ID	0x8613	EZ-USB FX2LP
Device release	0xAnnn	Depends on chip revision (nnn = chip revision where first silicon = 001)

ReNumeration

Because the FX2LP's configuration is soft, one chip can take on the identities of multiple distinct USB devices.

When first plugged into USB, the FX2LP enumerates automatically and downloads firmware and USB descriptor tables over the USB cable. Next, the FX2LP enumerates again, this time as a device defined by the downloaded information. This patented two step process called ReNumeration™ happens instantly when the device is plugged in, without a hint that the initial download step has occurred.

Two control bits in the USBCS (USB Control and Status) register control the ReNumeration process: DISCON and RENUM. To simulate a USB disconnect, the firmware sets DISCON to 1. To reconnect, the firmware clears DISCON to 0.

Before reconnecting, the firmware sets or clears the RENUM bit to indicate whether the firmware or the Default USB Device handles device requests over endpoint zero: if RENUM = 0, the Default USB Device handles device requests; if RENUM = 1, the firmware services the requests.

Bus-Powered Applications

The FX2LP fully supports bus-powered designs by enumerating with less than 100 mA as required by the USB 2.0 specification.

Interrupt System

INT2 Interrupt Request and Enable Registers

FX2LP implements an autovector feature for INT2 and INT4. There are 27 INT2 (USB) vectors, and 14 INT4 (FIFO/GPIF) vectors. See EZ-USB Technical Reference Manual (TRM) for more details.

USB Interrupt Autovectors

The main USB interrupt is shared by 27 interrupt sources. To save the code and processing time that is required to identify the individual USB interrupt source, the FX2LP provides a second level of interrupt vectoring, called Autovectoring. When a USB interrupt is asserted, the FX2LP pushes the program counter to its stack, and then jumps to the address 0x0043 where it expects to find a "jump" instruction to the USB interrupt service routine.

Note
2. The I^2C bus SCL and SDA pins must be pulled up, even if an EEPROM is not connected. Otherwise this detection method does not work properly.

The FX2LP jump instruction is encoded as follows:.

Table 3. INT2 USB Interrupts

USB INTERRUPT TABLE FOR INT2			
Priority	**INT2VEC Value**	**Source**	**Notes**
1	00	SUDAV	Setup data available
2	04	SOF	Start of frame (or microframe)
3	08	SUTOK	Setup token received
4	0C	SUSPEND	USB suspend request
5	10	USB RESET	Bus reset
6	14	HISPEED	Entered high speed operation
7	18	EP0ACK	FX2LP ACK'd the CONTROL Handshake
8	1C		reserved
9	20	EP0-IN	EP0-IN ready to be loaded with data
10	24	EP0-OUT	EP0-OUT has USB data
11	28	EP1-IN	EP1-IN ready to be loaded with data
12	2C	EP1-OUT	EP1-OUT has USB data
13	30	EP2	IN: buffer available. OUT: buffer has data
14	34	EP4	IN: buffer available. OUT: buffer has data
15	38	EP6	IN: buffer available. OUT: buffer has data
16	3C	EP8	IN: buffer available. OUT: buffer has data
17	40	IBN	IN-Bulk-NAK (any IN endpoint)
18	44		reserved
19	48	EP0PING	EP0 OUT was pinged and it NAK'd
20	4C	EP1PING	EP1 OUT was pinged and it NAK'd
21	50	EP2PING	EP2 OUT was pinged and it NAK'd
22	54	EP4PING	EP4 OUT was pinged and it NAK'd
23	58	EP6PING	EP6 OUT was pinged and it NAK'd
24	5C	EP8PING	EP8 OUT was pinged and it NAK'd
25	60	ERRLIMIT	Bus errors exceeded the programmed limit
26	64	–	–
27	68	–	Reserved
28	6C	–	Reserved
29	70	EP2ISOERR	ISO EP2 OUT PID sequence error
30	74	EP4ISOERR	ISO EP4 OUT PID sequence error
31	78	EP6ISOERR	ISO EP6 OUT PID sequence error
32	7C	EP8ISOERR	ISO EP8 OUT PID sequence error

If Autovectoring is enabled (AV2EN = 1 in the INTSET-UP register), the FX2LP substitutes its INT2VEC byte. Therefore, if the high byte ("page") of a jump table address is preloaded at the location 0x0044, the automatically inserted INT2VEC byte at 0x0045 directs the jump to the correct address out of the 27 addresses within the page.

FIFO/GPIF Interrupt (INT4)

Just as the USB Interrupt is shared among 27 individual USB interrupt sources, the FIFO/GPIF interrupt is shared among 14 individual FIFO/GPIF sources. The FIFO/GPIF Interrupt, similar to the USB Interrupt, can employ autovectoring.

Table 4 on page 8 shows the priority and INT4VEC values for the 14 FIFO/GPIF interrupt sources.

Table 4. Individual FIFO/GPIF Interrupt Sources

Priority	INT4VEC Value	Source	Notes
1	80	EP2PF	Endpoint 2 programmable flag
2	84	EP4PF	Endpoint 4 programmable flag
3	88	EP6PF	Endpoint 6 programmable flag
4	8C	EP8PF	Endpoint 8 programmable flag
5	90	EP2EF	Endpoint 2 empty flag [3]
6	94	EP4EF	Endpoint 4 empty flag
7	98	EP6EF	Endpoint 6 empty flag
8	9C	EP8EF	Endpoint 8 empty flag
9	A0	EP2FF	Endpoint 2 full flag
10	A4	EP4FF	Endpoint 4 full flag
11	A8	EP6FF	Endpoint 6 full flag
12	AC	EP8FF	Endpoint 8 full flag
13	B0	GPIFDONE	GPIF operation complete
14	B4	GPIFWF	GPIF waveform

If Autovectoring is enabled (AV4EN = 1 in the INTSET-UP register), the FX 2LP substitutes its INT4VEC byte. Therefore, if the high byte (“page”) of a jump-table address is preloaded at location 0x0054, the automatically inserted INT4VEC byte at 0x0055 directs the jump to the correct address out of the 14 addresses within the page. When the ISR occurs, the FX2LP pushes the program counter to its stack then jumps to address 0x0053, where it expects to find a “jump” instruction to the interrupt service routine (ISR).

Note

3. Errata: In Slave FIFO Asynchronous Word Wide mode, if a single word data is transferred from the USB host to EP2, configured as OUT Endpoint (EP) in the first transaction, then the Empty flag behaves incorrectly. This does not happen if the data size is more than one word in the first transaction. For more information, see the “Errata” on page 64.

Reset and Wakeup

Reset Pin

The input pin, RESET#, resets the FX2LP when asserted. This pin has hysteresis and is active LOW. When a crystal is used with the CY7C680xxA, the reset period must enable stabilization of the crystal and the PLL. This reset period must be approximately 5 ms after VCC reaches 3.0 V. If the crystal input pin is driven by a clock signal, the internal PLL stabilizes in 200 µs after VCC has reached 3.0 V[4].

Figure 2 on page 9 shows a power-on reset condition and a reset applied during operation. A power-on reset is defined as the time reset that is asserted while power is being applied to the circuit. A powered reset is when the FX2LP is powered on and operating and the RESET# pin is asserted.

Cypress provides an application note which describes and recommends power-on reset implementation. For more information about reset implementation for the FX2 family of products, visit http://www.cypress.com.

Figure 2. Reset Timing Plots

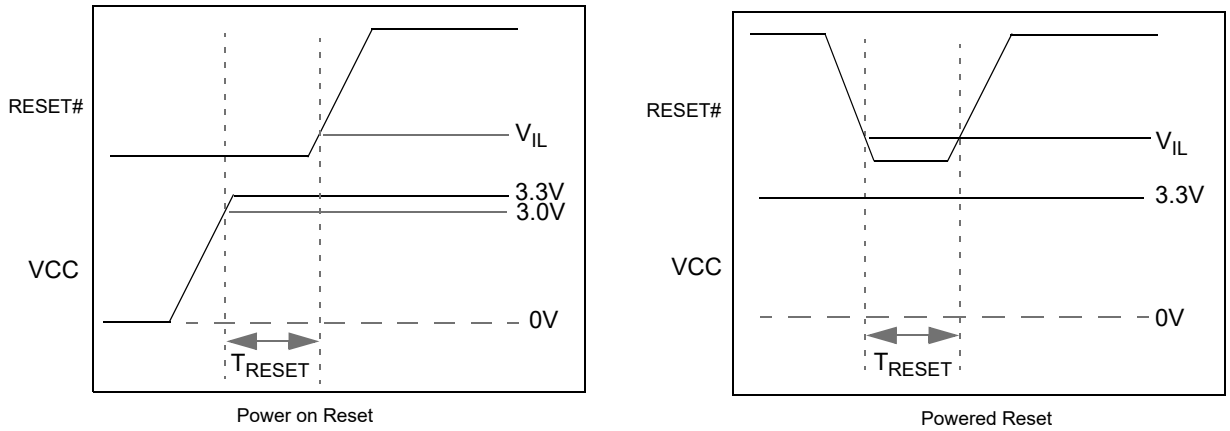

Table 5. Reset Timing Values

Condition	T_{RESET}
Power-on reset with crystal	5 ms
Power-on reset with external clock	200 µs + clock stability time
Powered reset	200 µs

Wakeup Pins

The 8051 puts itself and the rest of the chip into a power-down mode by setting PCON.0 = 1. This stops the oscillator and PLL. When WAKEUP is asserted by external logic, the oscillator restarts after the PLL stabilizes, and the 8051 receives a wakeup interrupt. This applies irrespective of whether FX2LP is connected to the USB.

The FX2LP exits the power-down (USB suspend) state by using one of the following methods:

- USB bus activity (if D+/D– lines are left floating, noise on these lines may indicate activity to the FX2LP and initiate a wakeup)
- External logic asserts the WAKEUP pin
- External logic asserts the PA3/WU2 pin

The second wakeup pin, WU2, can also be configured as a general-purpose I/O pin. This enables a simple external R-C network to be used as a periodic wakeup source. WAKEUP is by default active LOW.

Program/Data RAM

SizeThe FX2LP has 16 KB of internal program/data RAM, where PSEN#/RD# signals are internally ORed to enable the 8051 to access it as both program and data memory. No USB control registers appears in this space.

Two memory maps are shown in the following diagrams:

Figure 3 on page 10 shows the Internal Code Memory, EA = 0.

Figure 4 on page 11 shows the External Code Memory, EA = 1.

Internal Code Memory, EA = 0

This mode implements the internal 16 KB block of RAM (starting at 0) as combined code and data memory. When external RAM or ROM is added, the external read and write strobes are suppressed for memory spaces that exist inside the chip. This enables the user to connect a 64 KB memory without requiring address decodes to keep clear of internal memory spaces.

Only the internal 16 KB and scratch pad 0.5 KB RAM spaces have the following access:

- USB download
- USB upload
- Setup data pointer
- I^2C interface boot load

External Code Memory, EA = 1

The bottom 16 KB of program memory is external and therefore the bottom 16 KB of internal RAM is accessible only as a data memory.

Figure 3. Internal Code Memory, EA = 0

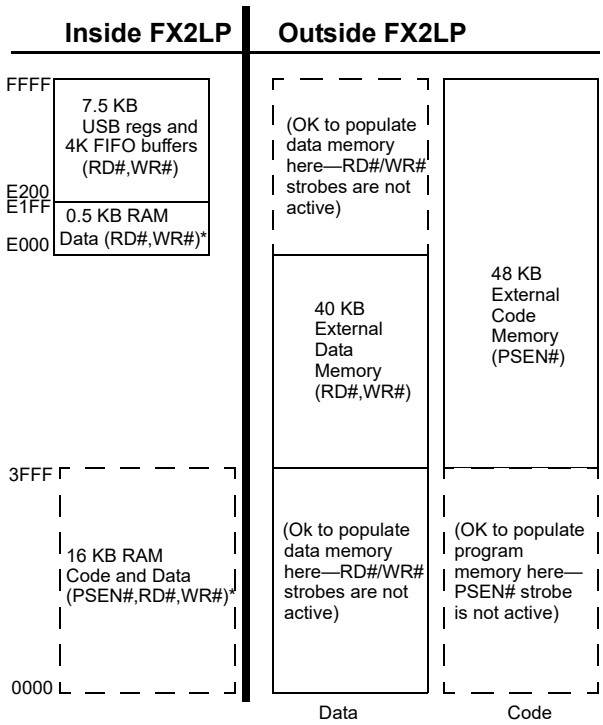

*SUDPTR, USB upload/download, I^2C interface boot access

Note

4. If the external clock is powered at the same time as the CY7C680xxA and has a stabilization wait period, it must be added to the 200 µs.

Figure 4. External Code Memory, EA = 1

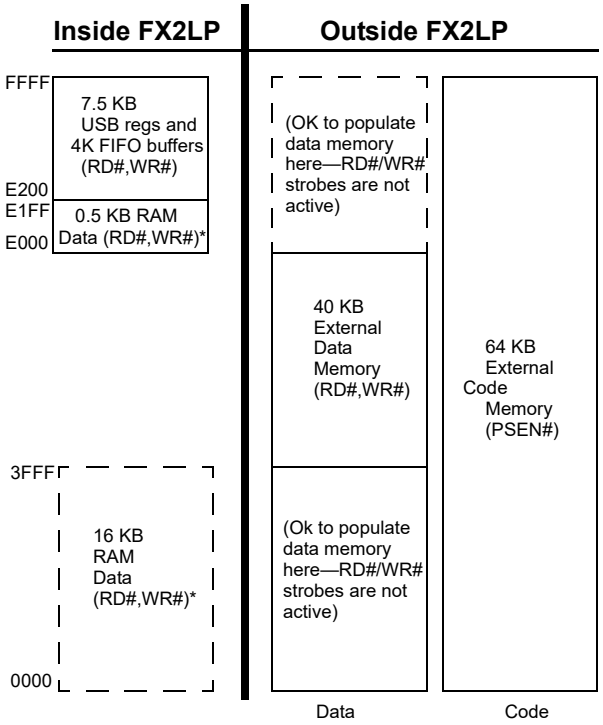

*SUDPTR, USB upload/download, I^2C interface boot access

Register Addresses

FFFF F000	4 KB EP2-EP8 buffers (8 x 512)
EFFF E800	2 KB RESERVED
E7FF E7C0	64 BEP1IN
E7BF E780	64 Bytes EP1OUT
E77F E740	64 Bytes EP0 IN/OUT
E73F E700	64 Bytes RESERVED
E6FF E500	8051 Addressable Registers (512)
E4FF E480	Reserved (128)
E47F E400	128 Bytes GPIF Waveforms
E3FF E200	Reserved (512)
E1FF E000	512 Bytes 8051 xdata RAM

Endpoint RAM

Size

- 3 × 64 bytes (Endpoints 0 and 1)
- 8 × 512 bytes (Endpoints 2, 4, 6, 8)

Organization

- EP0
- Bidirectional endpoint zero, 64-byte buffer
- EP1IN, EP1OUT
- 64 byte buffers, bulk or interrupt
- EP2, 4, 6, 8
- Eight 512-byte buffers, bulk, interrupt, or isochronous. EP4 and EP8 can be double buffered; EP2 and 6 can be either double, triple, or quad buffered. For Hi-Speed endpoint configuration options, see Figure 5.

Setup Data Buffer

A separate 8-byte buffer at 0xE6B8-0xE6BF holds the setup data from a CONTROL transfer.

Endpoint Configurations (Hi-Speed Mode)

Endpoints 0 and 1 are the same for every configuration. Endpoint 0 is the only CONTROL endpoint, and endpoint 1 can be either BULK or INTERRUPT.

The endpoint buffers can be configured in any 1 of the 12 configurations shown in the vertical columns. When operating in the Full-Speed BULK mode, only the first 64 bytes of each buffer are used. For example, in Hi-Speed mode, the max packet size is 512 bytes, but in Full-Speed mode, it is 64 bytes. Even though a buffer is configured to a 512-byte buffer, in Full-Speed mode, only the first 64 bytes are used. The unused endpoint buffer space is not available for other operations. An example endpoint configuration is the EP2–1024 double-buffered; EP6–512 quad-buffered (column 8).

Figure 5. Endpoint Configuration

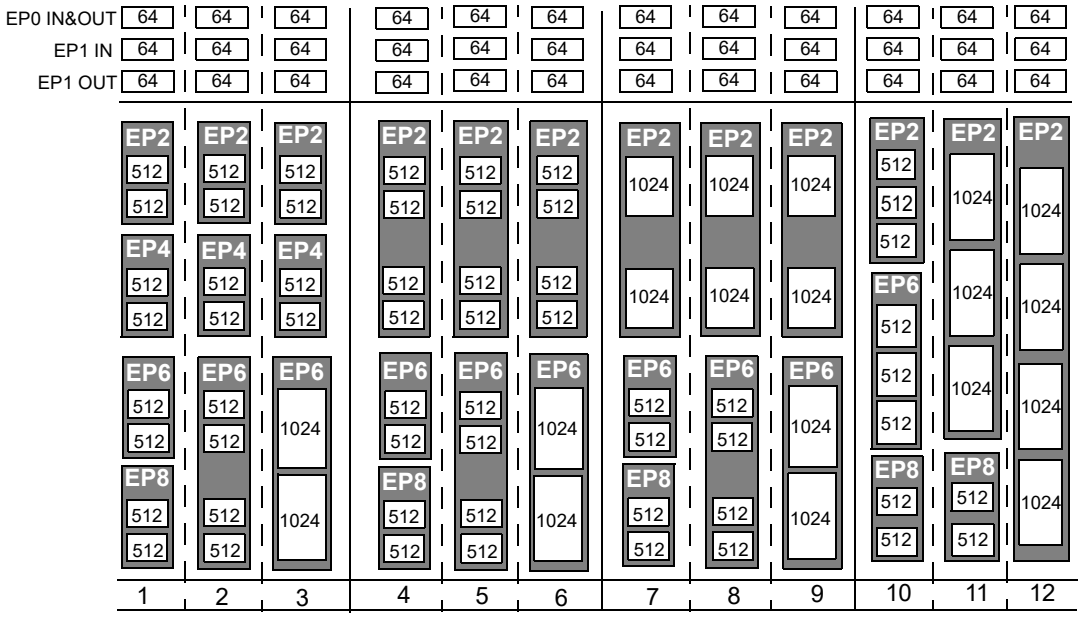

Default Full-Speed Alternate Settings

Table 6. Default Full Speed Alternate Settings[5, 6]

Alternate Setting	0	1	2	3
ep0	64	64	64	64
ep1out	0	64 bulk	64 int	64 int
ep1in	0	64 bulk	64 int	64 int
ep2	0	64 bulk out (2×)	64 int out (2×)	64 iso out (2×)
ep4	0	64 bulk out (2×)	64 bulk out (2×)	64 bulk out (2×)
ep6	0	64 bulk in (2×)	64 int in (2×)	64 iso in (2×)
ep8	0	64 bulk in (2×)	64 bulk in (2×)	64 bulk in (2×)

Default High Speed Alternate Settings

Table 7. Default Hi-Speed Alternate Settings[5, 6]

Alternate Setting	0	1	2	3
ep0	64	64	64	64
ep1out	0	512 bulk[7]	64 int	64 int
ep1in	0	512 bulk[7]	64 int	64 int
ep2	0	512 bulk out (2×)	512 int out (2×)	512 iso out (2×)
ep4	0	512 bulk out (2×)	512 bulk out (2×)	512 bulk out (2×)
ep6	0	512 bulk in (2×)	512 int in (2×)	512 iso in (2×)
ep8	0	512 bulk in (2×)	512 bulk in (2×)	512 bulk in (2×)

External FIFO Interface

Architecture

The FX2LP slave FIFO architecture has eight 512-byte blocks in the endpoint RAM that directly serve as FIFO memories and are controlled by FIFO control signals (such as IFCLK, SLCS#, SLRD, SLWR, SLOE, PKTEND, and flags).

In operation, some of the eight RAM blocks fill or empty from the SIE, while the others are connected to the I/O transfer logic. The transfer logic takes two forms: the GPIF for internally generated control signals and the slave FIFO interface for externally controlled transfers.

Master/Slave Control Signals

The FX2LP endpoint FIFOs are implemented as eight physically distinct 256×16 RAM blocks. The 8051/SIE can switch any of the RAM blocks between two domains, the USB (SIE) domain and the 8051-I/O Unit domain. This switching is done virtually instantaneously, giving essentially zero transfer time between "USB FIFOs" and "Slave FIFOs." Because they are physically the same memory, no bytes are actually transferred between buffers.

At any time, some RAM blocks are filling/emptying with the USB data under SIE control, while other RAM blocks are available to the 8051, the I/O control unit, or both. The RAM blocks operates as single-port in the USB domain, and dual-port in the 8051-I/O domain. The blocks can be configured as single-, double-, triple-, or quad-buffered as previously shown.

The I/O control unit implements either an internal master (M for Master) or external master (S for Slave) interface.

In Master (M) mode, the GPIF internally controls FIFOADR[1..0] to select a FIFO. The RDY pins (two in the 56-pin package, six in the 100-pin and 128-pin packages) can be used as flag inputs from an external FIFO or other logic if desired. The GPIF can be run from either an internally derived clock or externally supplied clock (IFCLK), at a rate that transfers data up to 96 MBytes/s (48

Notes
5. "0" means "not implemented."
6. "2×" means "double buffered."
7. Even though these buffers are 64 bytes, they are reported as 512 for USB 2.0 compliance. The user must never transfer packets larger than 64 bytes to EP1.

In the Slave (S) mode, FX2LP accepts either an internally derived clock or externally supplied clock (IFCLK, max frequency 48 MHz) and SLCS#, SLRD, SLWR, SLOE, PKTEND signals from external logic. When using an external IFCLK, the external clock must be present before switching to the external clock with the IFCLKSRC bit. Each endpoint can individually be selected for byte or word operation by an internal configuration bit and a Slave FIFO Output Enable signal (SLOE) that enables data of the selected width. External logic must ensure that the output enable signal is inactive when writing data to a slave FIFO. The slave interface can also operate asynchronously, where the SLRD and SLWR signals act directly as strobes, rather than a clock qualifier as in synchronous mode. The signals SLRD, SLWR, SLOE, and PKTEND are gated by the signal SLCS#.

GPIF and FIFO Clock Rates

An 8051 register bit selects one of two frequencies for the internally supplied interface clock: 30 MHz and 48 MHz. Alternatively, an externally supplied clock of 5 MHz–48 MHz feeding the IFCLK pin can be used as the interface clock. IFCLK can be configured to function as an output clock when the GPIF and FIFOs are internally clocked. An output enable bit in the IFCONFIG register turns this clock output off, if desired. Another bit within the IFCONFIG register inverts the IFCLK signal whether internally or externally sourced.

GPIF

The GPIF is a flexible 8-bit or 16-bit parallel interface driven by a user-programmable finite state machine. It enables the CY7C68013A/15A to perform local bus mastering and can implement a wide variety of protocols such as ATA interface, printer parallel port, and Utopia.

The GPIF has six programmable control outputs (CTL), nine address outputs (GPIFADRx), and six general-purpose ready inputs (RDY). The data bus width can be 8 or 16 bits. Each GPIF vector defines the state of the control outputs, and determines what state a ready input (or multiple inputs) must be before proceeding. The GPIF vector can be programmed to advance a FIFO to the next data value, advance an address, etc. A sequence of the GPIF vectors make up a single waveform that is executed to perform the desired data move between the FX2LP and the external device.

Six Control OUT Signals

The 100-pin and 128-pin packages bring out all six Control Output pins (CTL0-CTL5). The 8051 programs the GPIF unit to define the CTL waveforms. The 56-pin package brings out three of these signals, CTL0–CTL2. CTLx waveform edges can be programmed to make transitions as fast as once per clock (20.8 ns using a 48-MHz clock).

Six Ready IN Signals

The 100-pin and 128-pin packages bring out all six Ready inputs (RDY0–RDY5). The 8051 programs the GPIF unit to test the RDY pins for GPIF branching. The 56-pin package brings out two of these signals, RDY0–1.

Nine GPIF Address OUT Signals

Nine GPIF address lines are available in the 100-pin and 128-pin packages, GPIFADR[8..0]. The GPIF address lines enable indexing through up to a 512-byte block of RAM. If more address lines are needed, then I/O port pins are used.

Long Transfer Mode

In the master mode, the 8051 appropriately sets GPIF transaction count registers (GPIFTCB3, GPIFTCB2, GPIFTCB1, or GPIFTCB0) for unattended transfers of up to 2^{32} transactions. The GPIF automatically throttles data flow to prevent under or overflow until the full number of requested transactions complete. The GPIF decrements the value in these registers to represent the current status of the transaction.

ECC Generation[8]

The EZ-USB can calculate ECCs (Error Correcting Codes) on data that passes across its GPIF or Slave FIFO interfaces. There are two ECC configurations: Two ECCs, each calculated over 256 bytes (SmartMedia Standard); and one ECC calculated over 512 bytes.

The ECC can correct any one-bit error or detect any two-bit error.

ECC Implementation

The two ECC configurations are selected by the ECCM bit:

ECCM = 0

Two 3-byte ECCs, each calculated over a 256-byte block of data. This configuration conforms to the SmartMedia Standard.

Write any value to ECCRESET, then pass data across the GPIF or Slave FIFO interface. The ECC for the first 256 bytes of data is calculated and stored in ECC1. The ECC for the next 256 bytes is stored in ECC2. After the second ECC is calculated, the values in the ECCx registers do not change until ECCRESET is written again, even if more data is subsequently passed across the interface.

ECCM = 1

One 3-byte ECC calculated over a 512-byte block of data.

Write any value to ECCRESET then pass data across the GPIF or Slave FIFO interface. The ECC for the first 512 bytes of data is calculated and stored in ECC1; ECC2 is unused. After the ECC is calculated, the values in ECC1 do not change even if more data is subsequently passed across the interface, till ECCRESET is written again.

USB Uploads and Downloads

The core has the ability to directly edit the data contents of the internal 16-KB RAM and of the internal 512-byte scratch pad RAM via a vendor-specific command. This capability is normally used when soft downloading the user code and is available only to and from the internal RAM, only when the 8051 is held in reset. The available RAM spaces are 16 KB from 0x0000–0x3FFF (code/data) and 512 bytes from 0xE000–0xE1FF (scratch pad data RAM)[9].

Notes
8. To use the ECC logic, the GPIF or Slave FIFO interface must be configured for byte-wide operation.
9. After the data is downloaded from the host, a “loader” can execute from internal RAM to transfer downloaded data to external memory.

Autopointer Access

FX2LP provides two identical autopointers. They are similar to the internal 8051 data pointers but with an additional feature: they can optionally increment after every memory access. This capability is available to and from both internal and external RAM. Autopointers are available in external FX2LP registers under the control of a mode bit (AUTOPTRSET-UP.0). Using the external FX2LP autopointer access (at 0xE67B – 0xE67C) enables the autopointer to access all internal and external RAM to the part.

Also, autopointers can point to any FX2LP register or endpoint buffer space. When the autopointer access to external memory is enabled, locations 0xE67B and 0xE67C in XDATA and code space cannot be used.

I^2C Controller

FX2LP has one I^2C port that is driven by two internal controllers, the one that automatically operates at boot time to load VID/PID/DID and configuration information, and another that the 8051 uses when running to control external I^2C devices. The I^2C port operates in master mode only.

I^2C Port Pins

The I^2C pins SCL and SDA must have external 2.2-kΩ pull-up resistors even if no EEPROM is connected to the FX2LP. External EEPROM device address pins must be configured properly. See Table 8 for configuring the device address pins.

Table 8. Strap Boot EEPROM Address Lines to These Values

Bytes	Example EEPROM	A2	A1	A0
16	24LC00[10]	N/A	N/A	N/A
128	24LC01	0	0	0
256	24LC02	0	0	0
4K	24LC32	0	0	1
8K	24LC64	0	0	1
16K	24LC128	0	0	1

I^2C Interface Boot Load Access

At power-on reset, the I^2C interface boot loader loads the VID/PID/DID configuration bytes and up to 16 KB of program/data. The available RAM spaces are 16 KB from 0x0000–0x3FFF and 512 bytes from 0xE000–0xE1FF. The 8051 is in reset. I^2C interface boot loads only occur after power-on reset.

I^2C Interface General-Purpose Access

The 8051 can control peripherals connected to the I^2C bus using the I2CTL and I2DAT registers. FX2LP provides I^2C master control only; it is never an I^2C slave.

Compatible with Previous Generation EZ-USB FX2

The EZ-USB FX2LP is form-, fit-, and with minor exceptions, functionally-compatible with its predecessor, the EZ-USB FX2. This makes for an easy transition for designers wanting to upgrade their systems from the FX2 to the FX2LP. The pinout and package selection are identical and a vast majority of firmware previously developed for the FX2 functions in the FX2LP.

For designers migrating from the FX2 to the FX2LP, a change in the bill of material and review of the memory allocation (due to increased internal memory) is required. For more information about migrating from EZ-USB FX2 to EZ-USB FX2LP, see the application note titled *Migrating from EZ-USB FX2 to EZ-USB FX2LP* available in the Cypress web site.

Table 9. Part Number Conversion Table

EZ-USB FX2 Part Number	EZ-USB FX2LP Part Number	Package Description
CY7C68013-56PVC	CY7C68013A-56PVXC or CY7C68014A-56PVXC	56-pin SSOP
CY7C68013-56PVCT	CY7C68013A-56PVXCT or CY7C68014A-56PVXCT	56-pin SSOP – Tape and Reel
CY7C68013-56LFC	CY7C68013A-56LFXC or CY7C68014A-56LFXC	56-pin QFN
CY7C68013-100AC	CY7C68013A-100AXC or CY7C68014A-100AXC	100-pin TQFP
CY7C68013-128AC	CY7C68013A-128AXC or CY7C68014A-128AXC	128-pin TQFP

CY7C68013A/14A and CY7C68015A/16A Differences

CY7C68013A is identical to CY7C68014A in form, fit, and functionality. CY7C68015A is identical to CY7C68016A in form, fit, and functionality. CY7C68014A and CY7C68016A have a lower suspend current than CY7C68013A and CY7C68015A respectively and are ideal for power-sensitive battery applications.

CY7C68015A and CY7C68016A are available in 56-pin QFN package only. Two additional GPIO signals are available on the CY7C68015A and CY7C68016A to provide more flexibility when neither IFCLK or CLKOUT are needed in the 56-pin package.

USB developers wanting to convert their FX2 56-pin application to a bus-powered system directly benefit from these additional signals. The two GPIOs give developers the signals they need for the power-control circuitry of their bus-powered application without pushing them to a high-pincount version of FX2LP.

The CY7C68015A is only available in the 56-pin QFN package

Table 10. CY7C68013A/14A and CY7C68015A/16A Pin Differences

CY7C68013A/CY7C68014A	CY7C68015A/CY7C68016A
IFCLK	PE0
CLKOUT	PE1

Note
10. This EEPROM does not have address pins.

Pin Assignments

Figure 6 on page 17 identifies all signals for the five package types. The following pages illustrate the individual pin diagrams, plus a combination diagram showing which of the full set of signals are available in the 128-pin, 100-pin, and 56-pin packages.

The signals on the left edge of the 56-pin package in Figure 6 are common to all versions in the FX2LP family with the noted differences between the CY7C68013A/14A and the CY7C68015A/16A.

Three modes are available in all package versions: Port, GPIF master, and Slave FIFO. These modes define the signals on the right edge of the diagram. The 8051 selects the interface mode using the IFCONFIG[1:0] register bits. Port mode is the power on default configuration.

The 100-pin package adds functionality to the 56-pin package by adding these pins:

- PORTC or alternate GPIFADR[7:0] address signals
- PORTE or alternate GPIFADR[8] address signal and seven additional 8051 signals
- Three GPIF Control signals
- Four GPIF Ready signals
- Nine 8051 signals (two USARTs, three timer inputs, INT4, and INT5#)
- BKPT, RD#, WR#.

The 128-pin package adds the 8051 address and data buses plus control signals. Note that two of the required signals, RD# and WR#, are present in the 100-pin version.

In the 100-pin and 128-pin versions, an 8051 control bit can be set to pulse the RD# and WR# pins when the 8051 reads from/writes to PORTC. This feature is enabled by setting the PORTCSTB bit in the CPUCS register.

PORTC Strobe Feature Timings displays the timing diagram of the read and write strobing function on accessing PORTC.

Figure 6. Signal

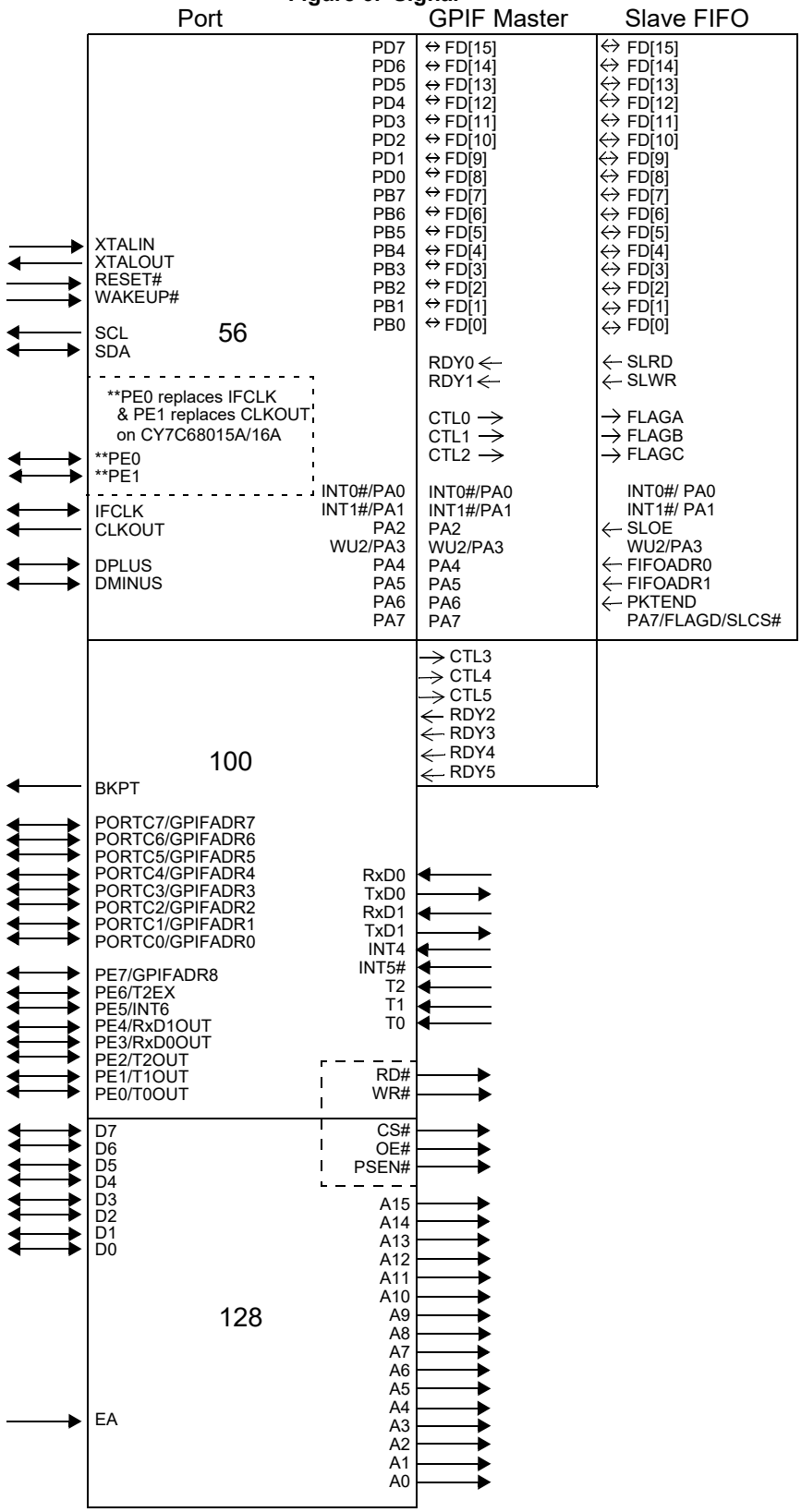

Figure 7. CY7C68013A/CY7C68014A 128-Pin TQFP Pin Assignment

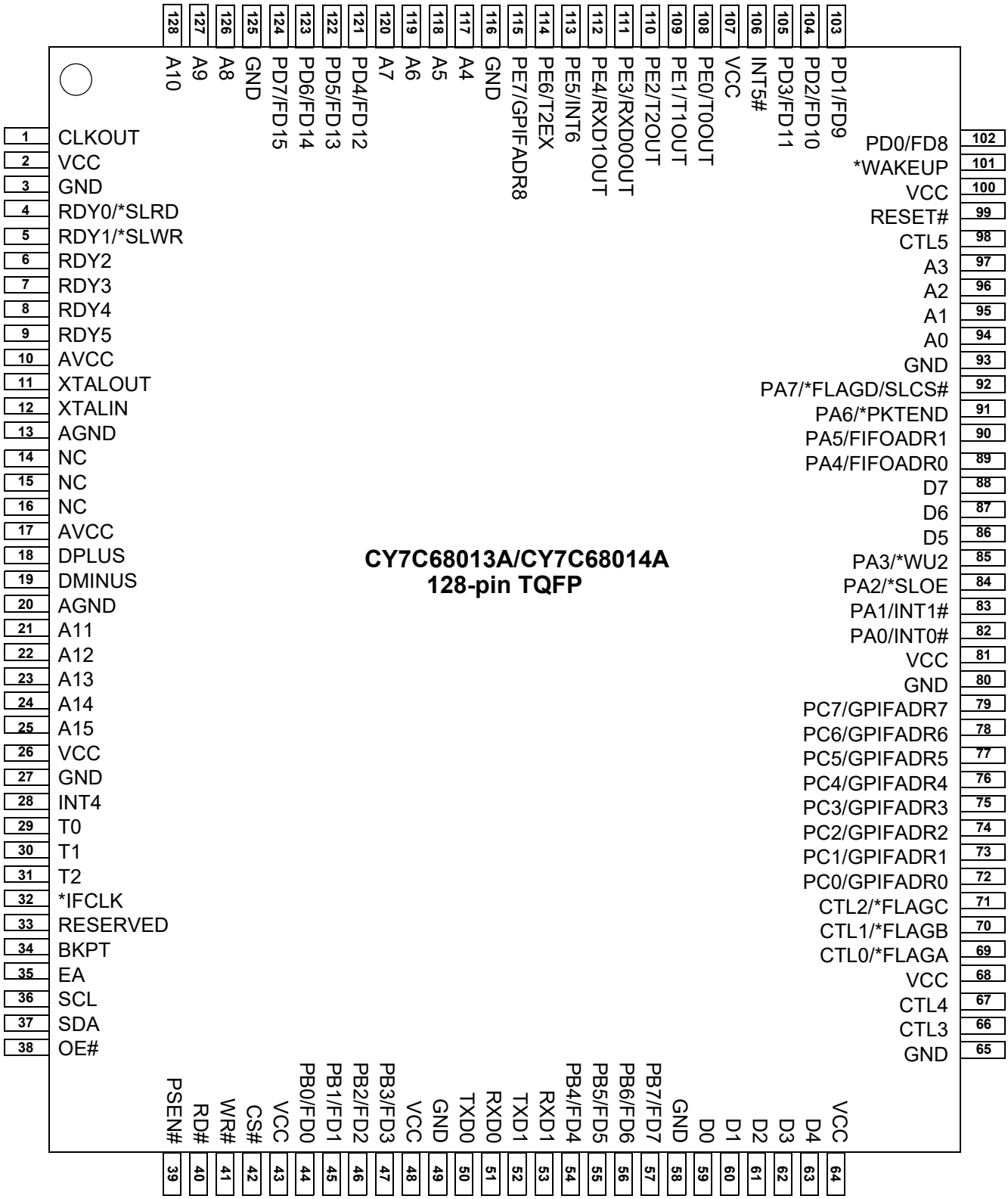

* denotes programmable polarity

Figure 8. CY7C68013A/CY7C68014A 100-Pin TQFP Pin Assignment

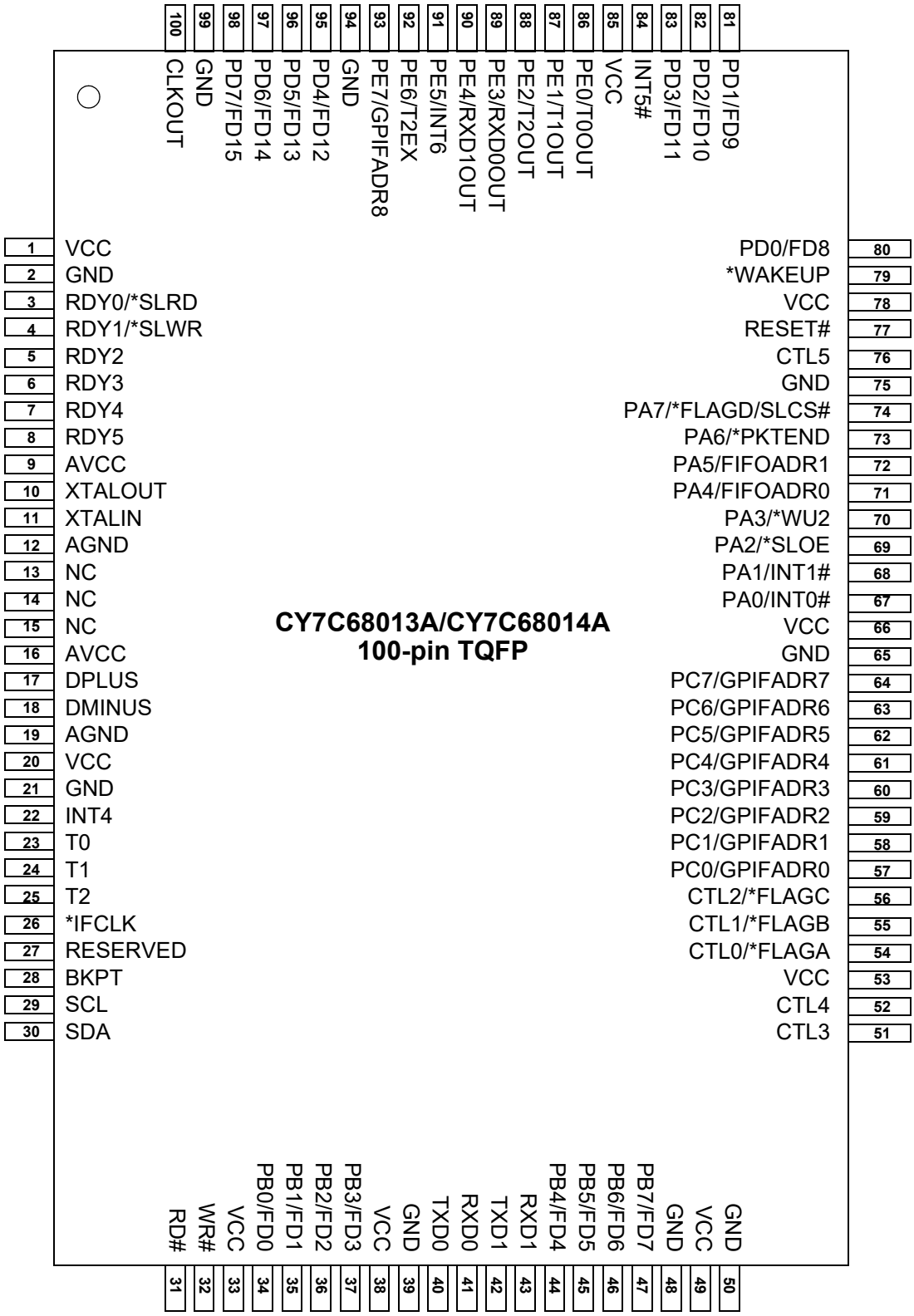

* denotes programmable polarity

Figure 9. CY7C68013A/CY7C68014A 56-Pin SSOP Pin Assignment

CY7C68013A/CY7C68014A
56-pin SSOP

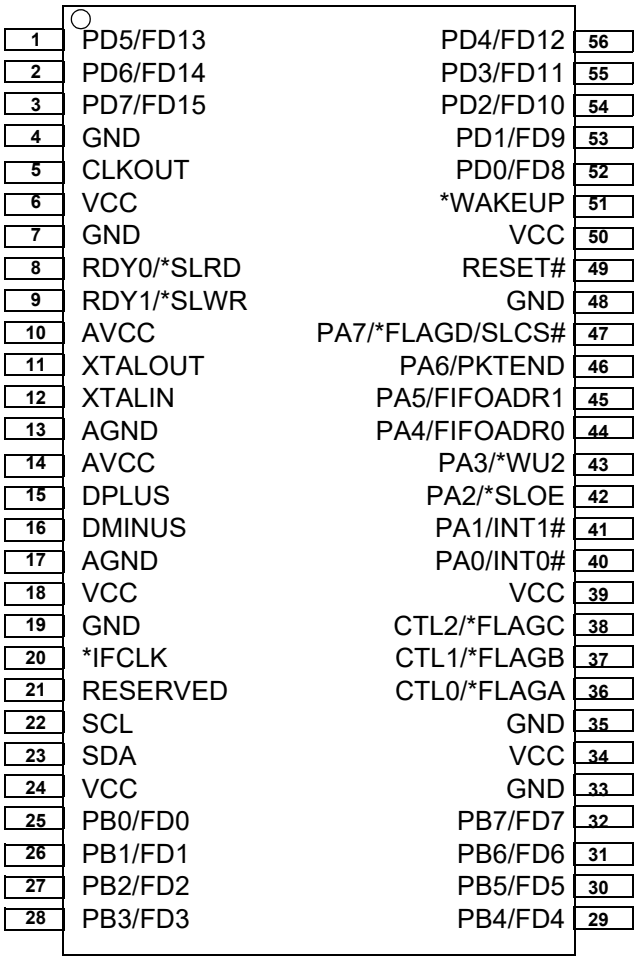

* denotes programmable polarity

Figure 10. CY7C68013A/14A/15A/16A 56-Pin QFN Pin Assignment

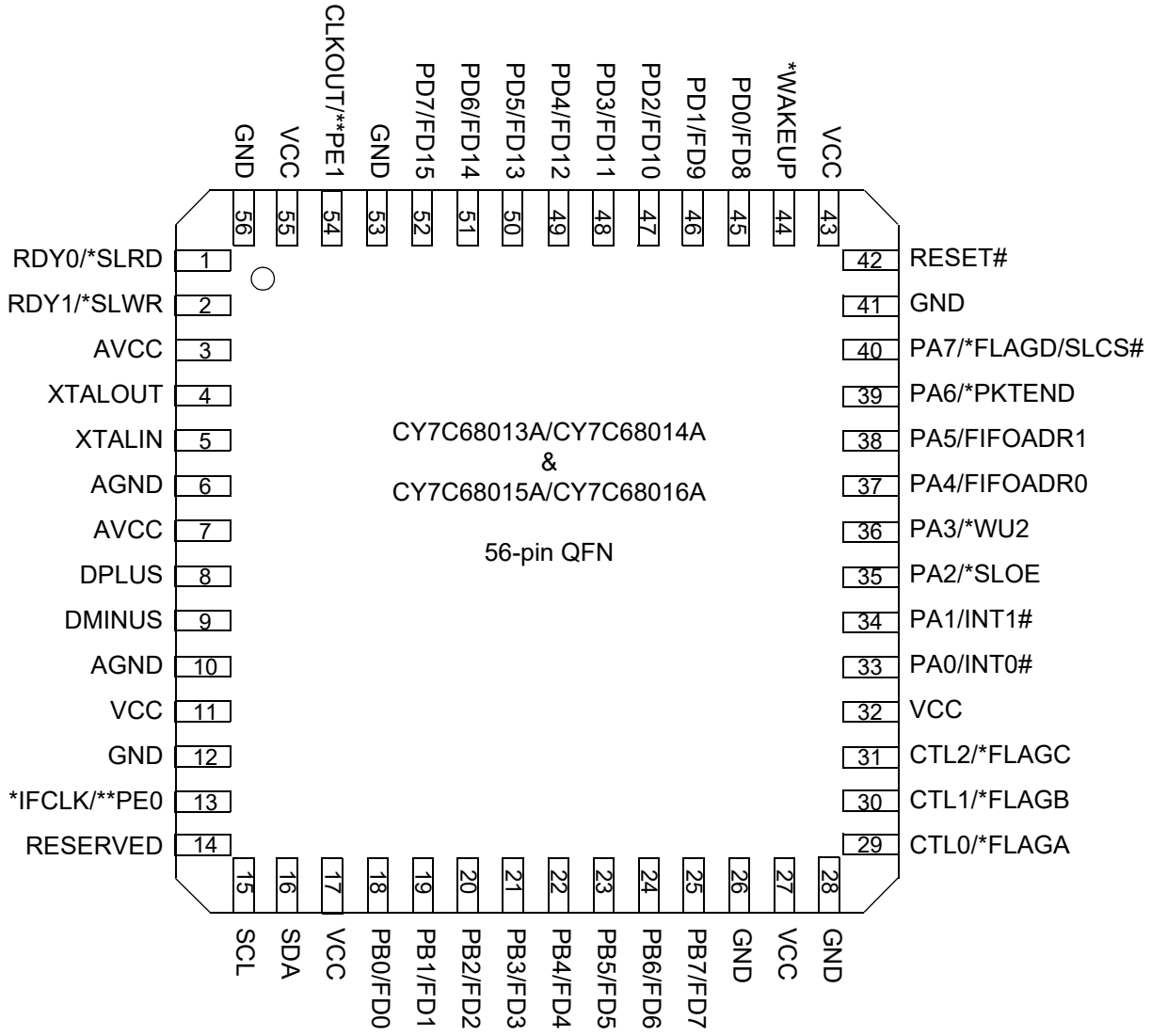

* denotes programmable polarity
** denotes CY7C68015A/CY7C68016A pinout

Figure 11. CY7C68013A 56-pin VFBGA Pin Assignment – Top View

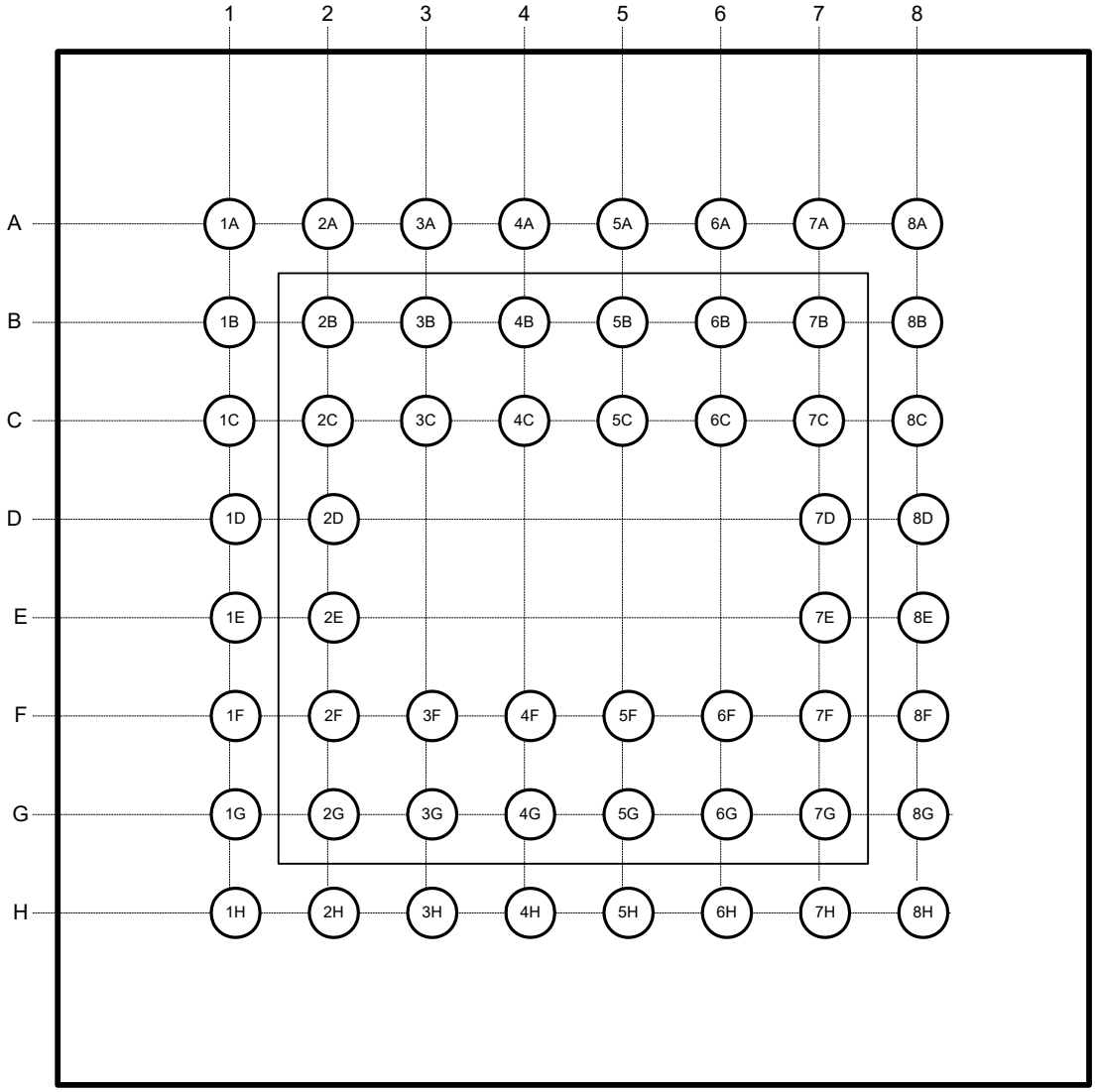

CY7C68013A/15A Pin Descriptions

Table 11. FX2LP Pin Descriptions[11]

128 TQFP	100 TQFP	56 SSOP	56 QFN	56 VFBGA	Name	Type	Default	Reset[12]	Description
10	9	10	3	2D	AVCC	Power	N/A	N/A	**Analog VCC**. Connect this pin to the 3.3 V power source. This signal provides power to the analog section of the chip.
17	16	14	7	1D	AVCC	Power	N/A	N/A	**Analog VCC**. Connect this pin to the 3.3 V power source. This signal provides power to the analog section of the chip.
13	12	13	6	2F	AGND	Ground	N/A	N/A	**Analog Ground**. Connect to ground with as short a path as possible.
20	19	17	10	1F	AGND	Ground	N/A	N/A	**Analog Ground**. Connect to ground with as short a path as possible.
19	18	16	9	1E	DMINUS	I/O/Z	Z	N/A	**USB D– Signal**. Connect to the USB D– signal.
18	17	15	8	2E	DPLUS	I/O/Z	Z	N/A	**USB D+ Signal**. Connect to the USB D+ signal.
94	–	–	–	–	A0	Output	L	L	**8051 Address Bus**. This bus is driven at all times. When the 8051 is addressing internal RAM it reflects the internal address.
95	–	–	–	–	A1	Output	L	L	
96	–	–	–	–	A2	Output	L	L	
97	–	–	–	–	A3	Output	L	L	
117	–	–	–	–	A4	Output	L	L	
118	–	–	–	–	A5	Output	L	L	
119	–	–	–	–	A6	Output	L	L	
120	–	–	–	–	A7	Output	L	L	
126	–	–	–	–	A8	Output	L	L	
127	–	–	–	–	A9	Output	L	L	
128	–	–	–	–	A10	Output	L	L	
21	–	–	–	–	A11	Output	L	L	
22	–	–	–	–	A12	Output	L	L	
23	–	–	–	–	A13	Output	L	L	
24	–	–	–	–	A14	Output	L	L	
25	–	–	–	–	A15	Output	L	L	
59	–	–	–	–	D0	I/O/Z	Z	Z	**8051 Data Bus**. This bidirectional bus is high impedance when inactive, input for bus reads, and output for bus writes. The data bus is used for external 8051 program and data memory. The data bus is active only for external bus accesses, and is driven LOW in suspend.
60	–	–	–	–	D1	I/O/Z	Z	Z	
61	–	–	–	–	D2	I/O/Z	Z	Z	
62	–	–	–	–	D3	I/O/Z	Z	Z	
63	–	–	–	–	D4	I/O/Z	Z	Z	
86	–	–	–	–	D5	I/O/Z	Z	Z	
87	–	–	–	–	D6	I/O/Z	Z	Z	
88	–	–	–	–	D7	I/O/Z	Z	Z	
39	–	–	–	–	PSEN#	Output	H	H	**Program Store Enable**. This active LOW signal indicates an 8051 code fetch from external memory. It is active for program memory fetches from 0x4000–0xFFFF when the EA pin is LOW, or from 0x0000–0xFFFF when the EA pin is HIGH.

Notes

11. Unused inputs must not be left floating. Tie either HIGH or LOW as appropriate. Outputs should only be pulled up or down to ensure signals at power up and in standby. Note also that no pins should be driven while the device is powered down.
12. The Reset column indicates the state of signals during reset (RESET# asserted) or during Power on Reset (POR).

Table 11. FX2LP Pin Descriptions[11] (continued)

128 TQFP	100 TQFP	56 SSOP	56 QFN	56 VFBGA	Name	Type	Default	Reset[12]	Description
34	28	–	–		BKPT	Output	L	L	**Breakpoint**. This pin goes active (HIGH) when the 8051 address bus matches the BPADDRH/L registers and breakpoints are enabled in the BREAKPT register (BPEN = 1). If the BPPULSE bit in the BREAKPT register is HIGH, this signal pulses HIGH for eight 12-/24-/48-MHz clocks. If the BPPULSE bit is LOW, the signal remains HIGH until the 8051 clears the BREAK bit (by writing 1 to it) in the BREAKPT register.
99	77	49	42	8B	RESET#	Input	N/A	N/A	**Active LOW Reset**. Resets the entire chip. See section "Reset and Wakeup" on page 9 for more details.
35	–	–	–	–	EA	Input	N/A	N/A	**External Access**. This pin determines where the 8051 fetches code between addresses 0x0000 and 0x3FFF. If EA = 0 the 8051 fetches this code from its internal RAM. IF EA = 1 the 8051 fetches this code from external memory.
12	11	12	5	1C	XTALIN	Input	N/A	N/A	**Crystal Input**. Connect this signal to a 24-MHz parallel-resonant, fundamental mode crystal and load capacitor to GND. It is also correct to drive XTALIN with an external 24-MHz square wave derived from another clock source. When driving from an external source, the driving signal should be a 3.3-V square wave.
11	10	11	4	2C	XTALOUT	Output	N/A	N/A	**Crystal Output**. Connect this signal to a 24-MHz parallel-resonant, fundamental mode crystal and load capacitor to GND. If an external clock is used to drive XTALIN, leave this pin open.
1	100	5	54	2B	CLKOUT on CY7C68013A and CY7C68014A ---------- PE1 on CY7C68015A and CY7C68016A	O/Z ---------- I/O/Z	12 MHz ---------- I	Clock Driven ---------- Z	**CLKOUT:** 12-, 24- or 48-MHz clock, phase-locked to the 24-MHz input clock. The 8051 defaults to 12-MHz operation. The 8051 may three-state this output by setting CPUCS.1 = 1. ---------- ------**PE1** is a bidirectional I/O port pin.
Port A									
82	67	40	33	8G	PA0 or INT0#	I/O/Z	I (PA0)	Z (PA0)	Multiplexed pin whose function is selected by PORTACFG.0 **PA0** is a bidirectional I/O port pin. **INT0#** is the active-LOW 8051 INT0 interrupt input signal, which is either edge-triggered (IT0 = 1) or level-triggered (IT0 = 0).
83	68	41	34	6G	PA1 or INT1#	I/O/Z	I (PA1)	Z (PA1)	Multiplexed pin whose function is selected by: PORTACFG.1 **PA1** is a bidirectional I/O port pin. **INT1#** is the active-LOW 8051 INT1 interrupt input signal, which is either edge-triggered (IT1 = 1) or level-triggered (IT1 = 0).

Table 11. FX2LP Pin Descriptions[11] (continued)

128 TQFP	100 TQFP	56 SSOP	56 QFN	56 VFBGA	Name	Type	Default	Reset[12]	Description
84	69	42	35	8F	PA2 or SLOE	I/O/Z	I (PA2)	Z (PA2)	Multiplexed pin whose function is selected by two bits: IFCONFIG[1:0]. **PA2** is a bidirectional I/O port pin. **SLOE** is an input-only output enable with programmable polarity (FIFOPINPOLAR.4) for the slave FIFOs connected to FD[7..0] or FD[15..0].
85	70	43	36	7F	PA3 or WU2	I/O/Z	I (PA3)	Z (PA3)	Multiplexed pin whose function is selected by: WAKEUP.7 and OEA.3 **PA3** is a bidirectional I/O port pin. **WU2** is an alternate source for **USB Wakeup,** enabled by WU2EN bit (WAKEUP.1) and polarity set by WU2POL (WAKEUP.4). If the 8051 is in suspend and WU2EN = 1, a transition on this pin starts up the oscillator and interrupts the 8051 to enable it to exit the suspend mode. Asserting this pin inhibits the chip from suspending if WU2EN = 1.
89	71	44	37	6F	PA4 or FIFOADR0	I/O/Z	I (PA4)	Z (PA4)	Multiplexed pin whose function is selected by: IFCONFIG[1..0]. **PA4** is a bidirectional I/O port pin. **FIFOADR0** is an input-only address select for the slave FIFOs connected to FD[7..0] or FD[15..0].
90	72	45	38	8C	PA5 or FIFOADR1	I/O/Z	I (PA5)	Z (PA5)	Multiplexed pin whose function is selected by: IFCONFIG[1..0]. **PA5** is a bidirectional I/O port pin. **FIFOADR1** is an input-only address select for the slave FIFOs connected to FD[7..0] or FD[15..0].
91	73	46	39	7C	PA6 or PKTEND	I/O/Z	I (PA6)	Z (PA6)	Multiplexed pin whose function is selected by the IFCONFIG[1:0] bits. **PA6** is a bidirectional I/O port pin. **PKTEND** is an input used to commit the FIFO packet data to the endpoint and whose polarity is programmable via FIFOPINPOLAR.5.
92	74	47	40	6C	PA7 or FLAGD or SLCS#	I/O/Z	I (PA7)	Z (PA7)	Multiplexed pin whose function is selected by the IFCONFIG[1:0] and PORTACFG.7 bits. **PA7** is a bidirectional I/O port pin. **FLAGD** is a programmable slave-FIFO output status flag signal. **SLCS#** gates all other slave FIFO enable/strobes
Port B									
44	34	25	18	3H	PB0 or FD[0]	I/O/Z	I (PB0)	Z (PB0)	Multiplexed pin whose function is selected by the following bits: IFCONFIG[1..0]. **PB0** is a bidirectional I/O port pin. **FD[0]** is the bidirectional FIFO/GPIF data bus.
45	35	26	19	4F	PB1 or FD[1]	I/O/Z	I (PB1)	Z (PB1)	Multiplexed pin whose function is selected by the following bits: IFCONFIG[1..0]. **PB1** is a bidirectional I/O port pin. **FD[1]** is the bidirectional FIFO/GPIF data bus.
46	36	27	20	4H	PB2 or FD[2]	I/O/Z	I (PB2)	Z (PB2)	Multiplexed pin whose function is selected by the following bits: IFCONFIG[1..0]. **PB2** is a bidirectional I/O port pin. **FD[2]** is the bidirectional FIFO/GPIF data bus.

Table 11. FX2LP Pin Descriptions[11] (continued)

128 TQFP	100 TQFP	56 SSOP	56 QFN	56 VFBGA	Name	Type	Default	Reset[12]	Description
47	37	28	21	4G	PB3 or FD[3]	I/O/Z	I (PB3)	Z (PB3)	Multiplexed pin whose function is selected by the following bits: IFCONFIG[1..0]. **PB3** is a bidirectional I/O port pin. **FD[3]** is the bidirectional FIFO/GPIF data bus.
54	44	29	22	5H	PB4 or FD[4]	I/O/Z	I (PB4)	Z (PB4)	Multiplexed pin whose function is selected by the following bits: IFCONFIG[1..0]. **PB4** is a bidirectional I/O port pin. **FD[4]** is the bidirectional FIFO/GPIF data bus.
55	45	30	23	5G	PB5 or FD[5]	I/O/Z	I (PB5)	Z (PB5)	Multiplexed pin whose function is selected by the following bits: IFCONFIG[1..0]. **PB5** is a bidirectional I/O port pin. **FD[5]** is the bidirectional FIFO/GPIF data bus.
56	46	31	24	5F	PB6 or FD[6]	I/O/Z	I (PB6)	Z (PB6)	Multiplexed pin whose function is selected by the following bits: IFCONFIG[1..0]. **PB6** is a bidirectional I/O port pin. **FD[6]** is the bidirectional FIFO/GPIF data bus.
57	47	32	25	6H	PB7 or FD[7]	I/O/Z	I (PB7)	Z (PB7)	Multiplexed pin whose function is selected by the following bits: IFCONFIG[1..0]. **PB7** is a bidirectional I/O port pin. **FD[7]** is the bidirectional FIFO/GPIF data bus.
PORT C									
72	57	–	–	–	PC0 or GPIFADR0	I/O/Z	I (PC0)	Z (PC0)	Multiplexed pin whose function is selected by PORTCCFG.0 **PC0** is a bidirectional I/O port pin. **GPIFADR0** is a GPIF address output pin.
73	58	–	–	–	PC1 or GPIFADR1	I/O/Z	I (PC1)	Z (PC1)	Multiplexed pin whose function is selected by PORTCCFG.1 **PC1** is a bidirectional I/O port pin. **GPIFADR1** is a GPIF address output pin.
74	59	–	–	–	PC2 or GPIFADR2	I/O/Z	I (PC2)	Z (PC2)	Multiplexed pin whose function is selected by PORTCCFG.2 **PC2** is a bidirectional I/O port pin. **GPIFADR2** is a GPIF address output pin.
75	60	–	–	–	PC3 or GPIFADR3	I/O/Z	I (PC3)	Z (PC3)	Multiplexed pin whose function is selected by PORTCCFG.3 **PC3** is a bidirectional I/O port pin. **GPIFADR3** is a GPIF address output pin.
76	61	–	–	–	PC4 or GPIFADR4	I/O/Z	I (PC4)	Z (PC4)	Multiplexed pin whose function is selected by PORTCCFG.4 **PC4** is a bidirectional I/O port pin. **GPIFADR4** is a GPIF address output pin.
77	62	–	–	–	PC5 or GPIFADR5	I/O/Z	I (PC5)	Z (PC5)	Multiplexed pin whose function is selected by PORTCCFG.5 **PC5** is a bidirectional I/O port pin. **GPIFADR5** is a GPIF address output pin.
78	63	–	–	–	PC6 or GPIFADR6	I/O/Z	I (PC6)	Z (PC6)	Multiplexed pin whose function is selected by PORTCCFG.6 **PC6** is a bidirectional I/O port pin. **GPIFADR6** is a GPIF address output pin.
79	64	–	–	–	PC7 or GPIFADR7	I/O/Z	I (PC7)	Z (PC7)	Multiplexed pin whose function is selected by PORTCCFG.7 **PC7** is a bidirectional I/O port pin. **GPIFADR7** is a GPIF address output pin.

Table 11. FX2LP Pin Descriptions[11] (continued)

128 TQFP	100 TQFP	56 SSOP	56 QFN	56 VFBGA	Name	Type	Default	Reset[12]	Description
PORT D									
102	80	52	45	8A	PD0 or FD[8]	I/O/Z	I (PD0)	Z (PD0)	Multiplexed pin whose function is selected by the IFCONFIG[1..0] and EPxFIFOCFG.0 (wordwide) bits. **FD[8]** is the bidirectional FIFO/GPIF data bus.
103	81	53	46	7A	PD1 or FD[9]	I/O/Z	I (PD1)	Z (PD1)	Multiplexed pin whose function is selected by the IFCONFIG[1..0] and EPxFIFOCFG.0 (wordwide) bits. **FD[9]** is the bidirectional FIFO/GPIF data bus.
104	82	54	47	6B	PD2 or FD[10]	I/O/Z	I (PD2)	Z (PD2)	Multiplexed pin whose function is selected by the IFCONFIG[1..0] and EPxFIFOCFG.0 (wordwide) bits. **FD[10]** is the bidirectional FIFO/GPIF data bus.
105	83	55	48	6A	PD3 or FD[11]	I/O/Z	I (PD3)	Z (PD3)	Multiplexed pin whose function is selected by the IFCONFIG[1..0] and EPxFIFOCFG.0 (wordwide) bits. **FD[11]** is the bidirectional FIFO/GPIF data bus.
121	95	56	49	3B	PD4 or FD[12]	I/O/Z	I (PD4)	Z (PD4)	Multiplexed pin whose function is selected by the IFCONFIG[1..0] and EPxFIFOCFG.0 (wordwide) bits. **FD[12]** is the bidirectional FIFO/GPIF data bus.
122	96	1	50	3A	PD5 or FD[13]	I/O/Z	I (PD5)	Z (PD5)	Multiplexed pin whose function is selected by the IFCONFIG[1..0] and EPxFIFOCFG.0 (wordwide) bits. **FD[13]** is the bidirectional FIFO/GPIF data bus.
123	97	2	51	3C	PD6 or FD[14]	I/O/Z	I (PD6)	Z (PD6)	Multiplexed pin whose function is selected by the IFCONFIG[1..0] and EPxFIFOCFG.0 (wordwide) bits. **FD[14]** is the bidirectional FIFO/GPIF data bus.
124	98	3	52	2A	PD7 or FD[15]	I/O/Z	I (PD7)	Z (PD7)	Multiplexed pin whose function is selected by the IFCONFIG[1..0] and EPxFIFOCFG.0 (wordwide) bits. **FD[15]** is the bidirectional FIFO/GPIF data bus.
Port E									
108	86	–	–	–	PE0 or T0OUT	I/O/Z	I (PE0)	Z (PE0)	Multiplexed pin whose function is selected by the PORTECFG.0 bit. **PE0** is a bidirectional I/O port pin. **T0OUT** is an active-HIGH signal from 8051 Timer-counter0. T0OUT outputs a high level for one CLKOUT clock cycle when Timer0 overflows. If Timer0 is operated in Mode 3 (two separate timer/counters), T0OUT is active when the low byte timer/counter overflows.
109	87	–	–	–	PE1 or T1OUT	I/O/Z	I (PE1)	Z (PE1)	Multiplexed pin whose function is selected by the PORTECFG.1 bit. **PE1** is a bidirectional I/O port pin. **T1OUT** is an active HIGH signal from 8051 Timer-counter1. T1OUT outputs a high level for one CLKOUT clock cycle when Timer1 overflows. If Timer1 is operated in Mode 3 (two separate timer/counters), T1OUT is active when the low byte timer/counter overflows.

Table 11. FX2LP Pin Descriptions[11] (continued)

128 TQFP	100 TQFP	56 SSOP	56 QFN	56 VFBGA	Name	Type	Default	Reset[12]	Description
110	88	–	–	–	PE2 or T2OUT	I/O/Z	I (PE2)	Z (PE2)	Multiplexed pin whose function is selected by the PORTECFG.2 bit. **PE2** is a bidirectional I/O port pin. **T2OUT** is the active HIGH output signal from 8051 Timer2. T2OUT is active (HIGH) for one clock cycle when Timer/Counter 2 overflows.
111	89	–	–	–	PE3 or RXD0OUT	I/O/Z	I (PE3)	Z (PE3)	Multiplexed pin whose function is selected by the PORTECFG.3 bit. **PE3** is a bidirectional I/O port pin. **RXD0OUT** is an active HIGH signal from 8051 UART0. If RXD0OUT is selected and UART0 is in Mode 0, this pin provides the output data for UART0 only when it is in sync mode. Otherwise it is a 1.
112	90	–	–	–	PE4 or RXD1OUT	I/O/Z	I (PE4)	Z (PE4)	Multiplexed pin whose function is selected by the PORTECFG.4 bit. **PE4** is a bidirectional I/O port pin. **RXD1OUT** is an active-HIGH output from 8051 UART1. When RXD1OUT is selected and UART1 is in Mode 0, this pin provides the output data for UART1 only when it is in sync mode. In Modes 1, 2, and 3, this pin is HIGH.
113	91	–	–	–	PE5 or INT6	I/O/Z	I (PE5)	Z (PE5)	Multiplexed pin whose function is selected by the PORTECFG.5 bit. **PE5** is a bidirectional I/O port pin. **INT6** is the 8051 INT6 interrupt request input signal. The INT6 pin is edge-sensitive, active HIGH.
114	92	–	–	–	PE6 or T2EX	I/O/Z	I (PE6)	Z (PE6)	Multiplexed pin whose function is selected by the PORTECFG.6 bit. **PE6** is a bidirectional I/O port pin. **T2EX** is an active HIGH input signal to the 8051 Timer2. T2EX reloads timer 2 on its falling edge. T2EX is active only if the EXEN2 bit is set in T2CON.
115	93	–	–	–	PE7 or GPIFADR8	I/O/Z	I (PE7)	Z (PE7)	Multiplexed pin whose function is selected by the PORTECFG.7 bit. **PE7** is a bidirectional I/O port pin. **GPIFADR8** is a GPIF address output pin.
4	3	8	1	1A	RDY0 or SLRD	Input	N/A	N/A	Multiplexed pin whose function is selected by the following bits: IFCONFIG[1..0]. **RDY0** is a GPIF input signal. **SLRD** is the input-only read strobe with programmable polarity (FIFOPINPOLAR.3) for the slave FIFOs connected to FD[7..0] or FD[15..0].
5	4	9	2	1B	RDY1 or SLWR	Input	N/A	N/A	Multiplexed pin whose function is selected by the following bits: IFCONFIG[1..0]. **RDY1** is a GPIF input signal. **SLWR** is the input-only write strobe with programmable polarity (FIFOPINPOLAR.2) for the slave FIFOs connected to FD[7..0] or FD[15..0].
6	5	–	–	–	RDY2	Input	N/A	N/A	**RDY2** is a GPIF input signal.

Table 11. FX2LP Pin Descriptions[11] (continued)

128 TQFP	100 TQFP	56 SSOP	56 QFN	56 VFBGA	Name	Type	Default	Reset[12]	Description
7	6	–	–	–	RDY3	Input	N/A	N/A	**RDY3** is a GPIF input signal.
8	7	–	–	–	RDY4	Input	N/A	N/A	**RDY4** is a GPIF input signal.
9	8	–	–	–	RDY5	Input	N/A	N/A	**RDY5** is a GPIF input signal.
69	54	36	29	7H	CTL0 or FLAGA	O/Z	H	L	Multiplexed pin whose function is selected by the following bits: IFCONFIG[1..0]. **CTL0** is a GPIF control output. **FLAGA** is a programmable slave-FIFO output status flag signal. Defaults to programmable for the FIFO selected by the FIFOADR[1:0] pins.
70	55	37	30	7G	CTL1 or FLAGB	O/Z	H	L	Multiplexed pin whose function is selected by the following bits: IFCONFIG[1..0]. **CTL1** is a GPIF control output. **FLAGB** is a programmable slave-FIFO output status flag signal. Defaults to FULL for the FIFO selected by the FIFOADR[1:0] pins.
71	56	38	31	8H	CTL2 or FLAGC	O/Z	H	L	Multiplexed pin whose function is selected by the following bits: IFCONFIG[1..0]. **CTL2** is a GPIF control output. **FLAGC** is a programmable slave-FIFO output status flag signal. Defaults to EMPTY for the FIFO selected by the FIFOADR[1:0] pins.
66	51	–	–	–	CTL3	O/Z	H	L	**CTL3** is a GPIF control output.
67	52	–	–	–	CTL4	Output	H	L	**CTL4** is a GPIF control output.
98	76	–	–	–	CTL5	Output	H	L	**CTL5** is a GPIF control output.
32	26	20	13	2G	IFCLK on CY7C68013A and CY7C68014A ---------- PE0 on CY7C68015A and CY7C68016A	I/O/Z ---------- I/O/Z	Z ---------- I	Z ---------- Z	Interface Clock, used for synchronously clocking data into or out of the slave FIFOs. IFCLK also serves as a timing reference for all slave FIFO control signals and GPIF. When internal clocking is used (IFCONFIG.7 = 1) the IFCLK pin can be configured to output 30/48 MHz by bits IFCONFIG.5 and IFCONFIG.6. IFCLK may be inverted, whether internally or externally sourced, by setting the bit IFCONFIG.4 =1. ---------- **PE0** is a bidirectional I/O port pin.
28	22	–	–	–	INT4	Input	N/A	N/A	**INT4** is the 8051 INT4 interrupt request input signal. The INT4 pin is edge-sensitive, active HIGH.
106	84	–	–	–	INT5#	Input	N/A	N/A	**INT5#** is the 8051 INT5 interrupt request input signal. The INT5 pin is edge-sensitive, active LOW.
31	25	–	–	–	T2	Input	N/A	N/A	**T2** is the active HIGH T2 input signal to 8051 Timer2, which provides the input to Timer2 when C/T2 = 1. When C/T2 = 0, Timer2 does not use this pin.

Table 11. FX2LP Pin Descriptions[11] (continued)

128 TQFP	100 TQFP	56 SSOP	56 QFN	56 VFBGA	Name	Type	Default	Reset[12]	Description
30	24	–	–	–	T1	Input	N/A	N/A	**T1** is the active HIGH T1 signal for 8051 Timer1, which provides the input to Timer1 when C/T1 is 1. When C/T1 is 0, Timer1 does not use this bit.
29	23	–	–	–	T0	Input	N/A	N/A	**T0** is the active HIGH T0 signal for 8051 Timer0, which provides the input to Timer0 when C/T0 is 1. When C/T0 is 0, Timer0 does not use this bit.
53	43	–	–	–	RXD1	Input	N/A	N/A	**RXD1**is an active HIGH input signal for 8051 UART1, which provides data to the UART in all modes.
52	42	–	–	–	TXD1	Output	H	L	**TXD1**is an active HIGH output pin from 8051 UART1, which provides the output clock in sync mode, and the output data in async mode.
51	41	–	–	–	RXD0	Input	N/A	N/A	**RXD0** is the active HIGH RXD0 input to 8051 UART0, which provides data to the UART in all modes.
50	40	–	–	–	TXD0	Output	H	L	**TXD0** is the active HIGH TXD0 output from 8051 UART0, which provides the output clock in sync mode, and the output data in async mode.
42		–	–	–	CS#	Output	H	H	**CS#** is the active LOW chip select for external memory.
41	32	–	–	–	WR#	Output	H	H	**WR#** is the active LOW write strobe output for external memory.
40	31	–	–	–	RD#	Output	H	H	**RD#** is the active LOW read strobe output for external memory.
38		–	–	–	OE#	Output	H	H	**OE#** is the active LOW output enable for external memory.
33	27	21	14	2H	Reserved	Input	N/A	N/A	**Reserved**. Connect to ground.
101	79	51	44	7B	WAKEUP	Input	N/A	N/A	**USB Wakeup**. If the 8051 is in suspend, asserting this pin starts up the oscillator and interrupts the 8051 to enable it to exit the suspend mode. Holding WAKEUP asserted inhibits the EZ-USB chip from suspending. This pin has programmable polarity (WAKEUP.4).
36	29	22	15	3F	SCL	OD	Z	Z (if booting is done)	**Clock** for the I^2C interface. Connect to VCC with a 2.2-kΩ resistor, even if no I^2C peripheral is attached.
37	30	23	16	3G	SDA	OD	Z	Z (if booting is done)	**Data** for **I^2C compatible interface**. Connect to VCC with a 2.2-kΩ resistor, **even if no I^2C compatible peripheral is attached**.
2	1	6	55	5A	VCC	Power	N/A	N/A	**VCC**. Connect to the 3.3-V power source.
26	20	18	11	1G	VCC	Power	N/A	N/A	**VCC**. Connect to the 3.3-V power source.
43	33	24	17	7E	VCC	Power	N/A	N/A	**VCC**. Connect to the 3.3-V power source.
48	38	–	–	–	VCC	Power	N/A	N/A	**VCC**. Connect to 3.3-V power source.
64	49	34	27	8E	VCC	Power	N/A	N/A	**VCC**. Connect to the 3.3-V power source.
68	53	–	–	–	VCC	Power	N/A	N/A	**VCC**. Connect to the 3.3-V power source.
81	66	39	32	5C	VCC	Power	N/A	N/A	**VCC**. Connect to the 3.3-V power source.

Table 11. FX2LP Pin Descriptions[11] (continued)

128 TQFP	100 TQFP	56 SSOP	56 QFN	56 VFBGA	Name	Type	Default	Reset[12]	Description
100	78	50	43	5B	VCC	Power	N/A	N/A	**VCC**. Connect to the 3.3-V power source.
107	85	–	–	–	VCC	Power	N/A	N/A	**VCC**. Connect to the 3.3-V power source.
3	2	7	56	4B	GND	Ground	N/A	N/A	**Ground**
27	21	19	12	1H	GND	Ground	N/A	N/A	**Ground**
49	39	–	–	–	GND	Ground	N/A	N/A	**Ground**
58	48	33	26	7D	GND	Ground	N/A	N/A	**Ground**
65	50	35	28	8D	GND	Ground	N/A	N/A	**Ground**
80	65	–	–	–	GND	Ground	N/A	N/A	**Ground**
93	75	48	41	4C	GND	Ground	N/A	N/A	**Ground**
116	94	–	–	–	GND	Ground	N/A	N/A	**Ground**
125	99	4	53	4A	GND	Ground	N/A	N/A	**Ground**
14	13	–	–	–	NC	N/A	N/A	N/A	**No Connect**. This pin must be left open.
15	14	–	–	–	NC	N/A	N/A	N/A	**No Connect**. This pin must be left open.
16	15	–	–	–	NC	N/A	N/A	N/A	**No Connect**. This pin must be left open.

Register Summary

FX2LP register bit definitions are described in the FX2LP TRM in greater detail.

Table 12. FX2LP Register Summary

Hex	Size	Name	Description	b7	b6	b5	b4	b3	b2	b1	b0	Default	Access
		GPIF Waveform Memories											
E400	128	WAVEDATA	GPIF Waveform Descriptor 0, 1, 2, 3 data	D7	D6	D5	D4	D3	D2	D1	D0	xxxxxxxx	RW
E480	128	reserved											
		GENERAL CONFIGURATION											
E50D		GPCR2	General Purpose Configuration Register 2	reserved	reserved	reserved	FULL_SPEED_ONLY	reserved	reserved	reserved	reserved	00000000	R
E600	1	CPUCS	CPU Control & Status	0	0	PORTCSTB	CLKSPD1	CLKSPD0	CLKINV	CLKOE	8051RES	00000010	rrbbbbbr
E601	1	IFCONFIG	Interface Configuration (Ports, GPIF, slave FIFOs)	IFCLKSRC	3048MHZ	IFCLKOE	IFCLKPOL	ASYNC	GSTATE	IFCFG1	IFCFG0	10000000	RW
E602	1	PINFLAGSAB[13]	Slave FIFO FLAGA and FLAGB Pin Configuration	FLAGB3	FLAGB2	FLAGB1	FLAGB0	FLAGA3	FLAGA2	FLAGA1	FLAGA0	00000000	RW
E603	1	PINFLAGSCD[13]	Slave FIFO FLAGC and FLAGD Pin Configuration	FLAGD3	FLAGD2	FLAGD1	FLAGD0	FLAGC3	FLAGC2	FLAGC1	FLAGC0	00000000	RW
E604	1	FIFORESET[13]	Restore FIFOS to default state	NAKALL	0	0	0	EP3	EP2	EP1	EP0	xxxxxxxx	W
E605	1	BREAKPT	Breakpoint Control	0	0	0	0	BREAK	BPPULSE	BPEN	0	00000000	rrrrbbbr
E606	1	BPADDRH	Breakpoint Address H	A15	A14	A13	A12	A11	A10	A9	A8	xxxxxxxx	RW
E607	1	BPADDRL	Breakpoint Address L	A7	A6	A5	A4	A3	A2	A1	A0	xxxxxxxx	RW
E608	1	UART230	230 Kbaud internally generated ref. clock	0	0	0	0	0	0	230UART1	230UART0	00000000	rrrrrrbb
E609	1	FIFOPINPOLAR[13]	Slave FIFO Interface pins polarity	0	0	PKTEND	SLOE	SLRD	SLWR	EF	FF	00000000	rrbbbbbb
E60A	1	REVID	Chip Revision	rv7	rv6	rv5	rv4	rv3	rv2	rv1	rv0	RevA 00000001	R
E60B	1	REVCTL[13]	Chip Revision Control	0	0	0	0	0	0	dyn_out	enh_pkt	00000000	rrrrrrbb
		UDMA											
E60C	1	GPIFHOLDAMOUNT	MSTB Hold Time (for UDMA)	0	0	0	0	0	0	HOLDTIME1	HOLDTIME0	00000000	rrrrrrbb
	3	reserved											
		ENDPOINT CONFIGURATION											
E610	1	EP1OUTCFG	Endpoint 1-OUT Configuration	VALID	0	TYPE1	TYPE0	0	0	0	0	10100000	brbbrrrr
E611	1	EP1INCFG	Endpoint 1-IN Configuration	VALID	0	TYPE1	TYPE0	0	0	0	0	10100000	brbbrrrr
E612	1	EP2CFG	Endpoint 2 Configuration	VALID	DIR	TYPE1	TYPE0	SIZE	0	BUF1	BUF0	10100010	bbbbbrbb
E613	1	EP4CFG	Endpoint 4 Configuration	VALID	DIR	TYPE1	TYPE0	0	0	0	0	10100000	bbbbrrrr
E614	1	EP6CFG	Endpoint 6 Configuration	VALID	DIR	TYPE1	TYPE0	SIZE	0	BUF1	BUF0	11100010	bbbbbrbb
E615	1	EP8CFG	Endpoint 8 Configuration	VALID	DIR	TYPE1	TYPE0	0	0	0	0	11100000	bbbbrrrr
	2	reserved											
E618	1	EP2FIFOCFG[13]	Endpoint 2 / slave FIFO configuration	0	INFM1	OEP1	AUTOOUT	AUTOIN	ZEROLENIN	0	WORDWIDE	00000101	rbbbbbrb
E619	1	EP4FIFOCFG[13]	Endpoint 4 / slave FIFO configuration	0	INFM1	OEP1	AUTOOUT	AUTOIN	ZEROLENIN	0	WORDWIDE	00000101	rbbbbbrb
E61A	1	EP6FIFOCFG[13]	Endpoint 6 / slave FIFO configuration	0	INFM1	OEP1	AUTOOUT	AUTOIN	ZEROLENIN	0	WORDWIDE	00000101	rbbbbbrb
E61B	1	EP8FIFOCFG[13]	Endpoint 8 / slave FIFO configuration	0	INFM1	OEP1	AUTOOUT	AUTOIN	ZEROLENIN	0	WORDWIDE	00000101	rbbbbbrb
E61C	4	reserved											
E620	1	EP2AUTOINLENH[13	Endpoint 2 AUTOIN Packet Length H	0	0	0	0	0	PL10	PL9	PL8	00000010	rrrrrbbb
E621	1	EP2AUTOINLENL[13]	Endpoint 2 AUTOIN Packet Length L	PL7	PL6	PL5	PL4	PL3	PL2	PL1	PL0	00000000	RW
E622	1	EP4AUTOINLENH[13]	Endpoint 4 AUTOIN Packet Length H	0	0	0	0	0	0	PL9	PL8	00000010	rrrrrrbb
E623	1	EP4AUTOINLENL[13]	Endpoint 4 AUTOIN Packet Length L	PL7	PL6	PL5	PL4	PL3	PL2	PL1	PL0	00000000	RW
E624	1	EP6AUTOINLENH[13]	Endpoint 6 AUTOIN Packet Length H	0	0	0	0	0	PL10	PL9	PL8	00000010	rrrrrbbb
E625	1	EP6AUTOINLENL[13]	Endpoint 6 AUTOIN Packet Length L	PL7	PL6	PL5	PL4	PL3	PL2	PL1	PL0	00000000	RW
E626	1	EP8AUTOINLENH[13]	Endpoint 8 AUTOIN Packet Length H	0	0	0	0	0	0	PL9	PL8	00000010	rrrrrrbb
E627	1	EP8AUTOINLENL[13]	Endpoint 8 AUTOIN Packet Length L	PL7	PL6	PL5	PL4	PL3	PL2	PL1	PL0	00000000	RW
E628	1	ECCCFG	ECC Configuration	0	0	0	0	0	0	0	ECCM	00000000	rrrrrrrb
E629	1	ECCRESET	ECC Reset	x	x	x	x	x	x	x	x	00000000	W
E62A	1	ECC1B0	ECC1 Byte 0 Address	LINE15	LINE14	LINE13	LINE12	LINE11	LINE10	LINE9	LINE8	00000000	R

Note

13. Read and writes to these registers may require synchronization delay; see Technical Reference Manual for “Synchronization Delay.”

Table 12. FX2LP Register Summary (continued)

Hex	Size	Name	Description	b7	b6	b5	b4	b3	b2	b1	b0	Default	Access
E62B	1	ECC1B1	ECC1 Byte 1 Address	LINE7	LINE6	LINE5	LINE4	LINE3	LINE2	LINE1	LINE0	00000000	R
E62C	1	ECC1B2	ECC1 Byte 2 Address	COL5	COL4	COL3	COL2	COL1	COL0	LINE17	LINE16	00000000	R
E62D	1	ECC2B0	ECC2 Byte 0 Address	LINE15	LINE14	LINE13	LINE12	LINE11	LINE10	LINE9	LINE8	00000000	R
E62E	1	ECC2B1	ECC2 Byte 1 Address	LINE7	LINE6	LINE5	LINE4	LINE3	LINE2	LINE1	LINE0	00000000	R
E62F	1	ECC2B2	ECC2 Byte 2 Address	COL5	COL4	COL3	COL2	COL1	COL0	0	0	00000000	R
E630 H.S.	1	EP2FIFOPFH[13]	Endpoint 2 / slave FIFO Programmable Flag H	DECIS	PKTSTAT	IN:PKTS[2] OUT:PFC12	IN:PKTS[1] OUT:PFC11	IN:PKTS[0] OUT:PFC10	0	PFC9	PFC8	10001000	bbbbbrbb
E630 F.S.	1	EP2FIFOPFH[13]	Endpoint 2 / slave FIFO Programmable Flag H	DECIS	PKTSTAT	OUT:PFC12	OUT:PFC11	OUT:PFC10	0	PFC9	IN:PKTS[2] OUT:PFC8	10001000	bbbbbrbb
E631 H.S.	1	EP2FIFOPFL[13]	Endpoint 2 / slave FIFO Programmable Flag L	PFC7	PFC6	PFC5	PFC4	PFC3	PFC2	PFC1	PFC0	00000000	RW
E631 F.S	1	EP2FIFOPFL[13]	Endpoint 2 / slave FIFO Programmable Flag L	IN:PKTS[1] OUT:PFC7	IN:PKTS[0] OUT:PFC6	PFC5	PFC4	PFC3	PFC2	PFC1	PFC0	00000000	RW
E632 H.S.	1	EP4FIFOPFH[13]	Endpoint 4 / slave FIFO Programmable Flag H	DECIS	PKTSTAT	0	IN: PKTS[1] OUT:PFC10	IN: PKTS[0] OUT:PFC9	0	0	PFC8	10001000	bbrbbrrb
E632 F.S	1	EP4FIFOPFH[13]	Endpoint 4 / slave FIFO Programmable Flag H	DECIS	PKTSTAT	0	OUT:PFC10	OUT:PFC9	0	0	PFC8	10001000	bbrbbrrb
E633 H.S.	1	EP4FIFOPFL[13]	Endpoint 4 / slave FIFO Programmable Flag L	PFC7	PFC6	PFC5	PFC4	PFC3	PFC2	PFC1	PFC0	00000000	RW
E633 F.S	1	EP4FIFOPFL[13]	Endpoint 4 / slave FIFO Programmable Flag L	IN: PKTS[1] OUT:PFC7	IN: PKTS[0] OUT:PFC6	PFC5	PFC4	PFC3	PFC2	PFC1	PFC0	00000000	RW
E634 H.S.	1	EP6FIFOPFH[13]	Endpoint 6 / slave FIFO Programmable Flag H	DECIS	PKTSTAT	IN:PKTS[2] OUT:PFC12	IN:PKTS[1] OUT:PFC11	IN:PKTS[0] OUT:PFC10	0	PFC9	PFC8	00001000	bbbbbrbb
E634 F.S	1	EP6FIFOPFH[13]	Endpoint 6 / slave FIFO Programmable Flag H	DECIS	PKTSTAT	OUT:PFC12	OUT:PFC11	OUT:PFC10	0	PFC9	IN:PKTS[2] OUT:PFC8	00001000	bbbbbrbb
E635 H.S.	1	EP6FIFOPFL[13]	Endpoint 6 / slave FIFO Programmable Flag L	PFC7	PFC6	PFC5	PFC4	PFC3	PFC2	PFC1	PFC0	00000000	RW
E635 F.S	1	EP6FIFOPFL[13]	Endpoint 6 / slave FIFO Programmable Flag L	IN:PKTS[1] OUT:PFC7	IN:PKTS[0] OUT:PFC6	PFC5	PFC4	PFC3	PFC2	PFC1	PFC0	00000000	RW
E636 H.S.	1	EP8FIFOPFH[13]	Endpoint 8 / slave FIFO Programmable Flag H	DECIS	PKTSTAT	0	IN: PKTS[1] OUT:PFC10	IN: PKTS[0] OUT:PFC9	0	0	PFC8	00001000	bbrbbrrb
E636 F.S	1	EP8FIFOPFH[13]	Endpoint 8 / slave FIFO Programmable Flag H	DECIS	PKTSTAT	0	OUT:PFC10	OUT:PFC9	0	0	PFC8	00001000	bbrbbrrb
E637 H.S.	1	EP8FIFOPFL[13]	Endpoint 8 / slave FIFO Programmable Flag L	PFC7	PFC6	PFC5	PFC4	PFC3	PFC2	PFC1	PFC0	00000000	RW
E637 F.S	1	EP8FIFOPFL[13]	Endpoint 8 / slave FIFO Programmable Flag L	IN: PKTS[1] OUT:PFC7	IN: PKTS[0] OUT:PFC6	PFC5	PFC4	PFC3	PFC2	PFC1	PFC0	00000000	RW
	8	reserved											
E640	1	EP2ISOINPKTS	EP2 (if ISO) IN Packets per frame (1-3)	AADJ	0	0	0	0	0	INPPF1	INPPF0	00000001	brrrrrbb
E641	1	EP4ISOINPKTS	EP4 (if ISO) IN Packets per frame (1-3)	AADJ	0	0	0	0	0	INPPF1	INPPF0	00000001	brrrrrrr
E642	1	EP6ISOINPKTS	EP6 (if ISO) IN Packets per frame (1-3)	AADJ	0	0	0	0	0	INPPF1	INPPF0	00000001	brrrrrbb
E643	1	EP8ISOINPKTS	EP8 (if ISO) IN Packets per frame (1-3)	AADJ	0	0	0	0	0	INPPF1	INPPF0	00000001	brrrrrrr
E644	4	reserved											
E648	1	INPKTEND[13]	Force IN Packet End	Skip	0	0	0	EP3	EP2	EP1	EP0	xxxxxxxx	W
E649	7	OUTPKTEND[13]	Force OUT Packet End	Skip	0	0	0	EP3	EP2	EP1	EP0	xxxxxxxx	W
		INTERRUPTS											
E650	1	EP2FIFOIE[13]	Endpoint 2 slave FIFO Flag Interrupt Enable	0	0	0	0	EDGEPF	PF	EF	FF	00000000	RW
E651	1	EP2FIFOIRQ[13,14]	Endpoint 2 slave FIFO Flag Interrupt Request	0	0	0	0	0	PF	EF	FF	00000000	rrrrrbbb
E652	1	EP4FIFOIE[13]	Endpoint 4 slave FIFO Flag Interrupt Enable	0	0	0	0	EDGEPF	PF	EF	FF	00000000	RW
E653	1	EP4FIFOIRQ[13,14]	Endpoint 4 slave FIFO Flag Interrupt Request	0	0	0	0	0	PF	EF	FF	00000000	rrrrrbbb
E654	1	EP6FIFOIE[13]	Endpoint 6 slave FIFO Flag Interrupt Enable	0	0	0	0	EDGEPF	PF	EF	FF	00000000	RW
E655	1	EP6FIFOIRQ[13,14]	Endpoint 6 slave FIFO Flag Interrupt Request	0	0	0	0	0	PF	EF	FF	00000000	rrrrrbbb
E656	1	EP8FIFOIE[13]	Endpoint 8 slave FIFO Flag Interrupt Enable	0	0	0	0	EDGEPF	PF	EF	FF	00000000	RW
E657	1	EP8FIFOIRQ[13,14]	Endpoint 8 slave FIFO Flag Interrupt Request	0	0	0	0	0	PF	EF	FF	00000000	rrrrrbbb
E658	1	IBNIE	IN-BULK-NAK Interrupt Enable	0	0	EP8	EP6	EP4	EP2	EP1	EP0	00000000	RW
E659	1	IBNIRQ[14]	IN-BULK-NAK interrupt Request	0	0	EP8	EP6	EP4	EP2	EP1	EP0	00xxxxxx	rrbbbbbb
E65A	1	NAKIE	Endpoint Ping-NAK / IBN Interrupt Enable	EP8	EP6	EP4	EP2	EP1	EP0	0	IBN	00000000	RW
E65B	1	NAKIRQ[14]	Endpoint Ping-NAK / IBN Interrupt Request	EP8	EP6	EP4	EP2	EP1	EP0	0	IBN	xxxxxx0x	bbbbbbrb
E65C	1	USBIE	USB Int Enables	0	EP0ACK	HSGRANT	URES	SUSP	SUTOK	SOF	SUDAV	00000000	RW

Note
14. The register can only be reset; it cannot be set.

Table 12. FX2LP Register Summary (continued)

Hex	Size	Name	Description	b7	b6	b5	b4	b3	b2	b1	b0	Default	Access
E65D	1	USBIRQ[14]	USB Interrupt Requests	0	EP0ACK	HSGRANT	URES	SUSP	SUTOK	SOF	SUDAV	0xxxxxxx	rbbbbbbb
E65E	1	EPIE	Endpoint Interrupt Enables	EP8	EP6	EP4	EP2	EP1OUT	EP1IN	EP0OUT	EP0IN	00000000	RW
E65F	1	EPIRQ[14]	Endpoint Interrupt Requests	EP8	EP6	EP4	EP2	EP1OUT	EP1IN	EP0OUT	EP0IN	0	RW
E660	1	GPIFIE[13]	GPIF Interrupt Enable	0	0	0	0	0	0	GPIFWF	GPIFDONE	00000000	RW
E661	1	GPIFIRQ[13]	GPIF Interrupt Request	0	0	0	0	0	0	GPIFWF	GPIFDONE	000000xx	RW
E662	1	USBERRIE	USB Error Interrupt Enables	ISOEP8	ISOEP6	ISOEP4	ISOEP2	0	0	0	ERRLIMIT	00000000	RW
E663	1	USBERRIRQ[14]	USB Error Interrupt Requests	ISOEP8	ISOEP6	ISOEP4	ISOEP2	0	0	0	ERRLIMIT	0000000x	bbbbrrrb
E664	1	ERRCNTLIM	USB Error counter and limit	EC3	EC2	EC1	EC0	LIMIT3	LIMIT2	LIMIT1	LIMIT0	xxxx0100	rrrrbbbb
E665	1	CLRERRCNT	Clear Error Counter EC3:0	x	x	x	x	x	x	x	x	xxxxxxxx	W
E666	1	INT2IVEC	Interrupt 2 (USB) Autovector	0	I2V4	I2V3	I2V2	I2V1	I2V0	0	0	00000000	R
E667	1	INT4IVEC	Interrupt 4 (slave FIFO & GPIF) Autovector	1	0	I4V3	I4V2	I4V1	I4V0	0	0	10000000	R
E668	1	INTSET-UP	Interrupt 2&4 setup	0	0	0	0	AV2EN	0	INT4SRC	AV4EN	00000000	RW
E669	7	reserved											
		INPUT / OUTPUT											
E670	1	PORTACFG	I/O PORTA Alternate Configuration	FLAGD	SLCS	0	0	0	0	INT1	INT0	00000000	RW
E671	1	PORTCCFG	I/O PORTC Alternate Configuration	GPIFA7	GPIFA6	GPIFA5	GPIFA4	GPIFA3	GPIFA2	GPIFA1	GPIFA0	00000000	RW
E672	1	PORTECFG	I/O PORTE Alternate Configuration	GPIFA8	T2EX	INT6	RXD1OUT	RXD0OUT	T2OUT	T1OUT	T0OUT	00000000	RW
E673	4	reserved											
E677	1	reserved											
E678	1	I^2CS	I²C Bus Control & Status	START	STOP	LASTRD	ID1	ID0	BERR	ACK	DONE	000xx000	bbbrrrrr
E679	1	I2DAT	I²C Bus Data	d7	d6	d5	d4	d3	d2	d1	d0	xxxxxxxx	RW
E67A	1	I^2CTL	I²C Bus Control	0	0	0	0	0	0	STOPIE	400KHZ	00000000	RW
E67B	1	XAUTODAT1	Autoptr1 MOVX access, when APTREN=1	D7	D6	D5	D4	D3	D2	D1	D0	xxxxxxxx	RW
E67C	1	XAUTODAT2	Autoptr2 MOVX access, when APTREN=1	D7	D6	D5	D4	D3	D2	D1	D0	xxxxxxxx	RW
		UDMA CRC											
E67D	1	UDMACRCH[13]	UDMA CRC MSB	CRC15	CRC14	CRC13	CRC12	CRC11	CRC10	CRC9	CRC8	01001010	RW
E67E	1	UDMACRCL[13]	UDMA CRC LSB	CRC7	CRC6	CRC5	CRC4	CRC3	CRC2	CRC1	CRC0	10111010	RW
E67F	1	UDMACRC-QUALIFIER	UDMA CRC Qualifier	QENABLE	0	0	0	QSTATE	QSIGNAL2	QSIGNAL1	QSIGNAL0	00000000	brrrbbbb
		USB CONTROL											
E680	1	USBCS	USB Control & Status	HSM	0	0	0	DISCON	NOSYNSOF	RENUM	SIGRSUME	x0000000	rrrrbbbb
E681	1	SUSPEND	Put chip into suspend	x	x	x	x	x	x	x	x	xxxxxxxx	W
E682	1	WAKEUPCS	Wakeup Control & Status	WU2	WU	WU2POL	WUPOL	0	DPEN	WU2EN	WUEN	xx000101	bbbbrbbb
E683	1	TOGCTL	Toggle Control	Q	S	R	I/O	EP3	EP2	EP1	EP0	x0000000	rrrbbbbb
E684	1	USBFRAMEH	USB Frame count H	0	0	0	0	0	FC10	FC9	FC8	00000xxx	R
E685	1	USBFRAMEL	USB Frame count L	FC7	FC6	FC5	FC4	FC3	FC2	FC1	FC0	xxxxxxxx	R
E686	1	MICROFRAME	Microframe count, 0-7	0	0	0	0	0	MF2	MF1	MF0	00000xxx	R
E687	1	FNADDR	USB Function address	0	FA6	FA5	FA4	FA3	FA2	FA1	FA0	0xxxxxxx	R
E688	2	reserved											
		ENDPOINTS											
E68A	1	EP0BCH[13]	Endpoint 0 Byte Count H	(BC15)	(BC14)	(BC13)	(BC12)	(BC11)	(BC10)	(BC9)	(BC8)	xxxxxxxx	RW
E68B	1	EP0BCL[13]	Endpoint 0 Byte Count L	(BC7)	BC6	BC5	BC4	BC3	BC2	BC1	BC0	xxxxxxxx	RW
E68C	1	reserved											
E68D	1	EP1OUTBC	Endpoint 1 OUT Byte Count	0	BC6	BC5	BC4	BC3	BC2	BC1	BC0	0xxxxxxx	RW
E68E	1	reserved											
E68F	1	EP1INBC	Endpoint 1 IN Byte Count	0	BC6	BC5	BC4	BC3	BC2	BC1	BC0	0xxxxxxx	RW
E690	1	EP2BCH[13]	Endpoint 2 Byte Count H	0	0	0	0	0	BC10	BC9	BC8	00000xxx	RW
E691	1	EP2BCL[13]	Endpoint 2 Byte Count L	BC7/SKIP	BC6	BC5	BC4	BC3	BC2	BC1	BC0	xxxxxxxx	RW
E692	2	reserved											
E694	1	EP4BCH[13]	Endpoint 4 Byte Count H	0	0	0	0	0	0	BC9	BC8	000000xx	RW
E695	1	EP4BCL[13]	Endpoint 4 Byte Count L	BC7/SKIP	BC6	BC5	BC4	BC3	BC2	BC1	BC0	xxxxxxxx	RW
E696	2	reserved											
E698	1	EP6BCH[13]	Endpoint 6 Byte Count H	0	0	0	0	0	BC10	BC9	BC8	00000xxx	RW
E699	1	EP6BCL[13]	Endpoint 6 Byte Count L	BC7/SKIP	BC6	BC5	BC4	BC3	BC2	BC1	BC0	xxxxxxxx	RW
E69A	2	reserved											
E69C	1	EP8BCH[13]	Endpoint 8 Byte Count H	0	0	0	0	0	0	BC9	BC8	000000xx	RW
E69D	1	EP8BCL[13]	Endpoint 8 Byte Count L	BC7/SKIP	BC6	BC5	BC4	BC3	BC2	BC1	BC0	xxxxxxxx	RW
E69E	2	reserved											

Table 12. FX2LP Register Summary (continued)

Hex	Size	Name	Description	b7	b6	b5	b4	b3	b2	b1	b0	Default	Access
E6A0	1	EP0CS	Endpoint 0 Control and Status	HSNAK	0	0	0	0	0	BUSY	STALL	10000000	bbbbbbrb
E6A1	1	EP1OUTCS	Endpoint 1 OUT Control and Status	0	0	0	0	0	0	BUSY	STALL	00000000	bbbbbbrb
E6A2	1	EP1INCS	Endpoint 1 IN Control and Status	0	0	0	0	0	0	BUSY	STALL	00000000	bbbbbbrb
E6A3	1	EP2CS	Endpoint 2 Control and Status	0	NPAK2	NPAK1	NPAK0	FULL	EMPTY	0	STALL	00101000	rrrrrrrb
E6A4	1	EP4CS	Endpoint 4 Control and Status	0	0	NPAK1	NPAK0	FULL	EMPTY	0	STALL	00101000	rrrrrrrb
E6A5	1	EP6CS	Endpoint 6 Control and Status	0	NPAK2	NPAK1	NPAK0	FULL	EMPTY	0	STALL	00000100	rrrrrrrb
E6A6	1	EP8CS	Endpoint 8 Control and Status	0	0	NPAK1	NPAK0	FULL	EMPTY	0	STALL	00000100	rrrrrrrb
E6A7	1	EP2FIFOFLGS	Endpoint 2 slave FIFO Flags	0	0	0	0	0	PF	EF	FF	00000010	R
E6A8	1	EP4FIFOFLGS	Endpoint 4 slave FIFO Flags	0	0	0	0	0	PF	EF	FF	00000010	R
E6A9	1	EP6FIFOFLGS	Endpoint 6 slave FIFO Flags	0	0	0	0	0	PF	EF	FF	00000110	R
E6AA	1	EP8FIFOFLGS	Endpoint 8 slave FIFO Flags	0	0	0	0	0	PF	EF	FF	00000110	R
E6AB	1	EP2FIFOBCH	Endpoint 2 slave FIFO total byte count H	0	0	0	BC12	BC11	BC10	BC9	BC8	00000000	R
E6AC	1	EP2FIFOBCL	Endpoint 2 slave FIFO total byte count L	BC7	BC6	BC5	BC4	BC3	BC2	BC1	BC0	00000000	R
E6AD	1	EP4FIFOBCH	Endpoint 4 slave FIFO total byte count H	0	0	0	0	0	BC10	BC9	BC8	00000000	R
E6AE	1	EP4FIFOBCL	Endpoint 4 slave FIFO total byte count L	BC7	BC6	BC5	BC4	BC3	BC2	BC1	BC0	00000000	R
E6AF	1	EP6FIFOBCH	Endpoint 6 slave FIFO total byte count H	0	0	0	0	BC11	BC10	BC9	BC8	00000000	R
E6B0	1	EP6FIFOBCL	Endpoint 6 slave FIFO total byte count L	BC7	BC6	BC5	BC4	BC3	BC2	BC1	BC0	00000000	R
E6B1	1	EP8FIFOBCH	Endpoint 8 slave FIFO total byte count H	0	0	0	0	0	BC10	BC9	BC8	00000000	R
E6B2	1	EP8FIFOBCL	Endpoint 8 slave FIFO total byte count L	BC7	BC6	BC5	BC4	BC3	BC2	BC1	BC0	00000000	R
E6B3	1	SUDPTRH	Setup Data Pointer high address byte	A15	A14	A13	A12	A11	A10	A9	A8	xxxxxxxx	RW
E6B4	1	SUDPTRL	Setup Data Pointer low address byte	A7	A6	A5	A4	A3	A2	A1	0	xxxxxxx0	bbbbbbbr
E6B5	1	SUDPTRCTL	Setup Data Pointer Auto Mode	0	0	0	0	0	0	0	SDPAUTO	00000001	RW
	2	reserved											
E6B8	8	SET-UPDAT	8 bytes of setup data	D7	D6	D5	D4	D3	D2	D1	D0	xxxxxxxx	R
			SET-UPDAT[0] = bmRequestType										
			SET-UPDAT[1] = bmRequest										
			SET-UPDAT[2:3] = wValue										
			SET-UPDAT[4:5] = wIndex										
			SET-UPDAT[6:7] = wLength										
		GPIF											
E6C0	1	GPIFWFSELECT	Waveform Selector	SINGLEWR1	SINGLEWR0	SINGLERD1	SINGLERD0	FIFOWR1	FIFOWR0	FIFORD1	FIFORD0	11100100	RW
E6C1	1	GPIFIDLECS	GPIF Done, GPIF IDLE drive mode	DONE	0	0	0	0	0	0	IDLEDRV	10000000	RW
E6C2	1	GPIFIDLECTL	Inactive Bus, CTL states	0	0	CTL5	CTL4	CTL3	CTL2	CTL1	CTL0	11111111	RW
E6C3	1	GPIFCTLCFG	CTL Drive Type	TRICTL	0	CTL5	CTL4	CTL3	CTL2	CTL1	CTL0	00000000	RW
E6C4	1	GPIFADRH[13]	GPIF Address H	0	0	0	0	0	0	0	GPIFA8	00000000	RW
E6C5	1	GPIFADRL[13]	GPIF Address L	GPIFA7	GPIFA6	GPIFA5	GPIFA4	GPIFA3	GPIFA2	GPIFA1	GPIFA0	00000000	RW
		FLOWSTATE											
E6C6	1	FLOWSTATE	Flowstate Enable and Selector	FSE	0	0	0	0	FS2	FS1	FS0	00000000	brrrrbbb
E6C7	1	FLOWLOGIC	Flowstate Logic	LFUNC1	LFUNC0	TERMA2	TERMA1	TERMA0	TERMB2	TERMB1	TERMB0	00000000	RW
E6C8	1	FLOWEQ0CTL	CTL-Pin States in Flowstate (when Logic = 0)	CTL0E3	CTL0E2	CTL0E1/ CTL5	CTL0E0/ CTL4	CTL3	CTL2	CTL1	CTL0	00000000	RW
E6C9	1	FLOWEQ1CTL	CTL-Pin States in Flowstate (when Logic = 1)	CTL0E3	CTL0E2	CTL0E1/ CTL5	CTL0E0/ CTL4	CTL3	CTL2	CTL1	CTL0	00000000	RW
E6CA	1	FLOWHOLDOFF	Holdoff Configuration	HOPERIOD3	HOPERIOD2	HOPERIOD1	HOPERIOD0	HOSTATE	HOCTL2	HOCTL1	HOCTL0	00010010	RW
E6CB	1	FLOWSTB	Flowstate Strobe Configuration	SLAVE	RDYASYNC	CTLTOGL	SUSTAIN	0	MSTB2	MSTB1	MSTB0	00100000	RW
E6CC	1	FLOWSTBEDGE	Flowstate Rising/Falling Edge Configuration	0	0	0	0	0	0	FALLING	RISING	00000001	rrrrrrbb
E6CD	1	FLOWSTBPERIOD	Master-Strobe Half-Period	D7	D6	D5	D4	D3	D2	D1	D0	00000010	RW
E6CE	1	GPIFTCB3[13]	GPIF Transaction Count Byte 3	TC31	TC30	TC29	TC28	TC27	TC26	TC25	TC24	00000000	RW

Table 12. FX2LP Register Summary (continued)

Hex	Size	Name	Description	b7	b6	b5	b4	b3	b2	b1	b0	Default	Access
E6CF	1	GPIFTCB2[13]	GPIF Transaction Count Byte 2	TC23	TC22	TC21	TC20	TC19	TC18	TC17	TC16	00000000	RW
E6D0	1	GPIFTCB1[13]	GPIF Transaction Count Byte 1	TC15	TC14	TC13	TC12	TC11	TC10	TC9	TC8	00000000	RW
E6D1	1	GPIFTCB0[13]	GPIF Transaction Count Byte 0	TC7	TC6	TC5	TC4	TC3	TC2	TC1	TC0	00000001	RW
	2	reserved										00000000	RW
		reserved											
		reserved											
E6D2	1	EP2GPIFFLGSEL[13]	Endpoint 2 GPIF Flag select	0	0	0	0	0	0	FS1	FS0	00000000	RW
E6D3	1	EP2GPIFPFSTOP	Endpoint 2 GPIF stop transaction on prog. flag	0	0	0	0	0	0	0	FIFO2FLAG	00000000	RW
E6D4	1	EP2GPIFTRIG[13]	Endpoint 2 GPIF Trigger	x	x	x	x	x	x	x	x	xxxxxxxx	W
	3	reserved											
		reserved											
		reserved											
E6DA	1	EP4GPIFFLGSEL[13]	Endpoint 4 GPIF Flag select	0	0	0	0	0	0	FS1	FS0	00000000	RW
E6DB	1	EP4GPIFPFSTOP	Endpoint 4 GPIF stop transaction on GPIF Flag	0	0	0	0	0	0	0	FIFO4FLAG	00000000	RW
E6DC	1	EP4GPIFTRIG[13]	Endpoint 4 GPIF Trigger	x	x	x	x	x	x	x	x	xxxxxxxx	W
	3	reserved											
		reserved											
		reserved											
E6E2	1	EP6GPIFFLGSEL[13]	Endpoint 6 GPIF Flag select	0	0	0	0	0	0	FS1	FS0	00000000	RW
E6E3	1	EP6GPIFPFSTOP	Endpoint 6 GPIF stop transaction on prog. flag	0	0	0	0	0	0	0	FIFO6FLAG	00000000	RW
E6E4	1	EP6GPIFTRIG[13]	Endpoint 6 GPIF Trigger	x	x	x	x	x	x	x	x	xxxxxxxx	W
	3	reserved											
		reserved											
		reserved											
E6EA	1	EP8GPIFFLGSEL[13]	Endpoint 8 GPIF Flag select	0	0	0	0	0	0	FS1	FS0	00000000	RW
E6EB	1	EP8GPIFPFSTOP	Endpoint 8 GPIF stop transaction on prog. flag	0	0	0	0	0	0	0	FIFO8FLAG	00000000	RW
E6EC	1	EP8GPIFTRIG[13]	Endpoint 8 GPIF Trigger	x	x	x	x	x	x	x	x	xxxxxxxx	W
	3	reserved											
E6F0	1	XGPIFSGLDATH	GPIF Data H (16-bit mode only)	D15	D14	D13	D12	D11	D10	D9	D8	xxxxxxxx	RW
E6F1	1	XGPIFSGLDATLX	Read/Write GPIF Data L & trigger transaction	D7	D6	D5	D4	D3	D2	D1	D0	xxxxxxxx	RW
E6F2	1	XGPIFSGLDATLNOX	Read GPIF Data L, no transaction trigger	D7	D6	D5	D4	D3	D2	D1	D0	xxxxxxxx	R
E6F3	1	GPIFREADYCFG	Internal RDY, Sync/Async, RDY pin states	INTRDY	SAS	TCXRDY5	0	0	0	0	0	00000000	bbbrrrrr
E6F4	1	GPIFREADYSTAT	GPIF Ready Status	0	0	RDY5	RDY4	RDY3	RDY2	RDY1	RDY0	00xxxxxx	R
E6F5	1	GPIFABORT	Abort GPIF Waveforms	x	x	x	x	x	x	x	x	xxxxxxxx	W
E6F6	2	reserved											
		ENDPOINT BUFFERS											
E740	64	EP0BUF	EP0-IN/-OUT buffer	D7	D6	D5	D4	D3	D2	D1	D0	xxxxxxxx	RW
E780	64	EP10UTBUF	EP1-OUT buffer	D7	D6	D5	D4	D3	D2	D1	D0	xxxxxxxx	RW
E7C0	64	EP1INBUF	EP1-IN buffer	D7	D6	D5	D4	D3	D2	D1	D0	xxxxxxxx	RW
E800	2048	reserved											RW
F000	1024	EP2FIFOBUF	512/1024 byte EP 2 / slave FIFO buffer (IN or OUT)	D7	D6	D5	D4	D3	D2	D1	D0	xxxxxxxx	RW
F400	512	EP4FIFOBUF	512 byte EP 4 / slave FIFO buffer (IN or OUT)	D7	D6	D5	D4	D3	D2	D1	D0	xxxxxxxx	RW
F600	512	reserved											
F800	1024	EP6FIFOBUF	512/1024 byte EP 6 / slave FIFO buffer (IN or OUT)	D7	D6	D5	D4	D3	D2	D1	D0	xxxxxxxx	RW
FC00	512	EP8FIFOBUF	512 byte EP 8 / slave FIFO buffer (IN or OUT)	D7	D6	D5	D4	D3	D2	D1	D0	xxxxxxxx	RW
FE00	512	reserved											

Table 12. FX2LP Register Summary (continued)

Hex	Size	Name	Description	b7	b6	b5	b4	b3	b2	b1	b0	Default	Access
xxxx		I²C Configuration Byte		0	DISCON	0	0	0	0	0	400KHZ	xxxxxxxx [16]	n/a
		Special Function Registers (SFRs)											
80	1	IOA[15]	Port A (bit addressable)	D7	D6	D5	D4	D3	D2	D1	D0	xxxxxxxx	RW
81	1	SP	Stack Pointer	D7	D6	D5	D4	D3	D2	D1	D0	00000111	RW
82	1	DPL0	Data Pointer 0 L	A7	A6	A5	A4	A3	A2	A1	A0	00000000	RW
83	1	DPH0	Data Pointer 0 H	A15	A14	A13	A12	A11	A10	A9	A8	00000000	RW
84	1	DPL1[15]	Data Pointer 1 L	A7	A6	A5	A4	A3	A2	A1	A0	00000000	RW
85	1	DPH1[15]	Data Pointer 1 H	A15	A14	A13	A12	A11	A10	A9	A8	00000000	RW
86	1	DPS[15]	Data Pointer 0/1 select	0	0	0	0	0	0	0	SEL	00000000	RW
87	1	PCON	Power Control	SMOD0	x	1	1	x	x	x	IDLE	00110000	RW
88	1	TCON	Timer/Counter Control (bit addressable)	TF1	TR1	TF0	TR0	IE1	IT1	IE0	IT0	00000000	RW
89	1	TMOD	Timer/Counter Mode Control	GATE	CT	M1	M0	GATE	CT	M1	M0	00000000	RW
8A	1	TL0	Timer 0 reload L	D7	D6	D5	D4	D3	D2	D1	D0	00000000	RW
8B	1	TL1	Timer 1 reload L	D7	D6	D5	D4	D3	D2	D1	D0	00000000	RW
8C	1	TH0	Timer 0 reload H	D15	D14	D13	D12	D11	D10	D9	D8	00000000	RW
8D	1	TH1	Timer 1 reload H	D15	D14	D13	D12	D11	D10	D9	D8	00000000	RW
8E	1	CKCON[15]	Clock Control	x	x	T2M	T1M	T0M	MD2	MD1	MD0	00000001	RW
8F	1	reserved											
90	1	IOB[15]	Port B (bit addressable)	D7	D6	D5	D4	D3	D2	D1	D0	xxxxxxxx	RW
91	1	EXIF[15]	External Interrupt Flag(s)	IE5	IE4	I²CINT	USBNT	1	0	0	0	00001000	RW
92	1	MPAGE[15]	Upper Addr Byte of MOVX using @R0 / @R1	A15	A14	A13	A12	A11	A10	A9	A8	00000000	RW
93	5	reserved											
98	1	SCON0	Serial Port 0 Control (bit addressable)	SM0_0	SM1_0	SM2_0	REN_0	TB8_0	RB8_0	TI_0	RI_0	00000000	RW
99	1	SBUF0	Serial Port 0 Data Buffer	D7	D6	D5	D4	D3	D2	D1	D0	00000000	RW
9A	1	AUTOPTRH1[15]	Autopointer 1 Address H	A15	A14	A13	A12	A11	A10	A9	A8	00000000	RW
9B	1	AUTOPTRL1[15]	Autopointer 1 Address L	A7	A6	A5	A4	A3	A2	A1	A0	00000000	RW
9C	1	reserved											
9D	1	AUTOPTRH2[15]	Autopointer 2 Address H	A15	A14	A13	A12	A11	A10	A9	A8	00000000	RW
9E	1	AUTOPTRL2[15]	Autopointer 2 Address L	A7	A6	A5	A4	A3	A2	A1	A0	00000000	RW
9F	1	reserved											
A0	1	IOC[15]	Port C (bit addressable)	D7	D6	D5	D4	D3	D2	D1	D0	xxxxxxxx	RW
A1	1	INT2CLR[15]	Interrupt 2 clear	x	x	x	x	x	x	x	x	xxxxxxxx	W
A2	1	INT4CLR[15]	Interrupt 4 clear	x	x	x	x	x	x	x	x	xxxxxxxx	W
A3	5	reserved											
A8	1	IE	Interrupt Enable (bit addressable)	EA	ES1	ET2	ES0	ET1	EX1	ET0	EX0	00000000	RW
A9	1	reserved											
AA	1	EP2468STAT[15]	Endpoint 2,4,6,8 status flags	EP8F	EP8E	EP6F	EP6E	EP4F	EP4E	EP2F	EP2E	01011010	R
AB	1	EP24FIFOFLGS [15]	Endpoint 2,4 slave FIFO status flags	0	EP4PF	EP4EF	EP4FF	0	EP2PF	EP2EF	EP2FF	00100010	R
AC	1	EP68FIFOFLGS [15]	Endpoint 6,8 slave FIFO status flags	0	EP8PF	EP8EF	EP8FF	0	EP6PF	EP6EF	EP6FF	01100110	R
AD	2	reserved											
AF	1	AUTOPTRSETUP[15]	Autopointer 1&2 setup	0	0	0	0	0	APTR2INC	APTR1INC	APTREN	00000110	RW
B0	1	IOD[15]	Port D (bit addressable)	D7	D6	D5	D4	D3	D2	D1	D0	xxxxxxxx	RW
B1	1	IOE[15]	Port E (NOT bit addressable)	D7	D6	D5	D4	D3	D2	D1	D0	xxxxxxxx	RW
B2	1	OEA[15]	Port A Output Enable	D7	D6	D5	D4	D3	D2	D1	D0	00000000	RW
B3	1	OEB[15]	Port B Output Enable	D7	D6	D5	D4	D3	D2	D1	D0	00000000	RW
B4	1	OEC[15]	Port C Output Enable	D7	D6	D5	D4	D3	D2	D1	D0	00000000	RW
B5	1	OED[15]	Port D Output Enable	D7	D6	D5	D4	D3	D2	D1	D0	00000000	RW
B6	1	OEE[15]	Port E Output Enable	D7	D6	D5	D4	D3	D2	D1	D0	00000000	RW
B7	1	reserved											
B8	1	IP	Interrupt Priority (bit addressable)	1	PS1	PT2	PS0	PT1	PX1	PT0	PX0	10000000	RW
B9	1	reserved											
BA	1	EP01STAT[15]	Endpoint 0&1 Status	0	0	0	0	0	EP1INBSY	EP1OUTBSY	EP0BSY	00000000	R
BB	1	GPIFTRIG[15, 13]	Endpoint 2,4,6,8 GPIF slave FIFO Trigger	DONE	0	0	0	0	RW	EP1	EP0	10000xxx	brrrrbbb
BC	1	reserved											
BD	1	GPIFSGLDATH[15]	GPIF Data H (16-bit mode only)	D15	D14	D13	D12	D11	D10	D9	D8	xxxxxxxx	RW

Notes
15. SFRs not part of the standard 8051 architecture.
16. If no EEPROM is detected by the SIE then the default is 00000000.

Table 12. FX2LP Register Summary (continued)

Hex	Size	Name	Description	b7	b6	b5	b4	b3	b2	b1	b0	Default	Access
BE	1	GPIFSGLDATLX[15]	GPIF Data L w/ Trigger	D7	D6	D5	D4	D3	D2	D1	D0	xxxxxxxx	RW
BF	1	GPIFSGLDATL-NOX[15]	GPIF Data L w/ No Trigger	D7	D6	D5	D4	D3	D2	D1	D0	xxxxxxxx	R
C0	1	SCON1[15]	Serial Port 1 Control (bit addressable)	SM0_1	SM1_1	SM2_1	REN_1	TB8_1	RB8_1	TI_1	RI_1	00000000	RW
C1	1	SBUF1[15]	Serial Port 1 Data Buffer	D7	D6	D5	D4	D3	D2	D1	D0	00000000	RW
C2	6	reserved											
C8	1	T2CON	Timer/Counter 2 Control (bit addressable)	TF2	EXF2	RCLK	TCLK	EXEN2	TR2	CT2	CPRL2	00000000	RW
C9	1	reserved											
CA	1	RCAP2L	Capture for Timer 2, auto-reload, up-counter	D7	D6	D5	D4	D3	D2	D1	D0	00000000	RW
CB	1	RCAP2H	Capture for Timer 2, auto-reload, up-counter	D7	D6	D5	D4	D3	D2	D1	D0	00000000	RW
CC	1	TL2	Timer 2 reload L	D7	D6	D5	D4	D3	D2	D1	D0	00000000	RW
CD	1	TH2	Timer 2 reload H	D15	D14	D13	D12	D11	D10	D9	D8	00000000	RW
CE	2	reserved											
D0	1	PSW	Program Status Word (bit addressable)	CY	AC	F0	RS1	RS0	OV	F1	P	00000000	RW
D1	7	reserved											
D8	1	EICON[15]	External Interrupt Control	SMOD1	1	ERESI	RESI	INT6	0	0	0	01000000	RW
D9	7	reserved											
E0	1	ACC	Accumulator (bit addressable)	D7	D6	D5	D4	D3	D2	D1	D0	00000000	RW
E1	7	reserved											
E8	1	EIE[15]	External Interrupt Enable(s)	1	1	1	EX6	EX5	EX4	EI²C	EUSB	11100000	RW
E9	7	reserved											
F0	1	B	B (bit addressable)	D7	D6	D5	D4	D3	D2	D1	D0	00000000	RW
F1	7	reserved											
F8	1	EIP[15]	External Interrupt Priority Control	1	1	1	PX6	PX5	PX4	PI²C	PUSB	11100000	RW
F9	7	reserved											

R = all bits read-only
W = all bits write-only
r = read-only bit
w = write-only bit
b = both read/write bit

Absolute Maximum Ratings

Exceeding maximum ratings may shorten the useful life of the device. User guidelines are not tested.

Storage temperature ..... –65 °C to +150 °C

Ambient temperature with power supplied (commercial)..... 0 °C to +70 °C

Ambient temperature with power supplied (industrial)..... –40 °C to + 105 °C

Supply voltage to ground potential .....–0.5 V to +4.0 V

DC input voltage to any input pin[17]..... 5.25 V

DC voltage applied to outputs in high Z state ..... –0.5 V to V_{CC} + 0.5 V

Power dissipation ..... 300 mW

Static discharge voltage.....>2000 V

Max output current, per I/O port ..... 10 mA

Max output current, all five I/O ports (128-pin and 100-pin packages)..... 50 mA

Operating Conditions

T_A (ambient temperature under bias) Commercial ..... 0 °C to +70 °C

T_A (ambient temperature under bias) Industrial ..... –40 °C to +105 °C

Supply voltage .....+3.00 V to +3.60 V

Ground voltage ..... 0 V

F_{OSC} (oscillator or crystal frequency) ..... 24 MHz ± 100 ppm, parallel resonant

Thermal Characteristics

The following table displays the thermal characteristics of various packages:

Table 13. Thermal Characteristics

Package	Ambient Temperature (°C)	θJc Junction to Case Thermal Resistance (°C/W)	θJa Junction to Ambient Thermal Resistance (°C/W)
56 SSOP	70	24.4	47.7
100 TQFP	70	11.9	45.9
128 TQFP	70	15.5	43.2
56 QFN	70	10.6	25.2
56 VFBGA	70	30.9	58.6

The junction temperature θ_j, can be calculated using the following equation: $\theta_j = P^*\theta_{Ja} + \theta_a$

Where,

P = Power

θ_{Ja} = Junction to ambient temperature ($\theta_{Jc} + \theta_{Ca}$)

θ_a = Ambient temperature (70 °C)

The case temperature θ_c, can be calculated using the following equation: $\theta_c = P^*\theta_{Ca} + \theta_a$

where,

P = Power

θ_{Ca} = Case to ambient temperature

θ_a = Ambient temperature (70 °C)

Note
17. Do not power I/O with the chip power OFF.

DC Characteristics

Table 14. DC Characteristics

Parameter	Description	Conditions	Min	Typ	Max	Unit
VCC	Supply voltage	–	3.00	3.3	3.60	V
VCC Ramp Up	0 to 3.3 V	–	200	–	–	µs
V_{IH}	Input HIGH voltage	–	2	–	5.25	V
V_{IL}	Input LOW voltage	–	–0.5	–	0.8	V
V_{IH_X}	Crystal input HIGH voltage	–	2	–	5.25	V
V_{IL_X}	Crystal input LOW voltage	–	–0.5	–	0.8	V
I_I	Input leakage current	$0 < V_{IN} < V_{CC}$	–	–	±10	µA
V_{OH}	Output voltage HIGH	I_{OUT} = 4 mA	2.4	–	–	V
V_{OL}	Output LOW voltage	I_{OUT} = –4 mA	–	–	0.4	V
I_{OH}	Output current HIGH	–	–	–	4	mA
I_{OL}	Output current LOW	–	–	–	4	mA
C_{IN}	Input pin capacitance	Except D+/D–	–	–	10	pF
		D+/D–	–	–	15	pF
I_{SUSP}	Suspend current CY7C68014/CY7C68016	Connected	–	300	380[18]	µA
		Disconnected	–	100	150[18]	µA
	Suspend current CY7C68013/CY7C68015	Connected	–	0.5	1.2[18]	mA
		Disconnected	–	0.3	1.0[18]	mA
I_{CC}	Supply current	8051 running, connected to USB HS	–	50	85	mA
		8051 running, connected to USB FS	–	35	65	mA
T_{RESET}	Reset time after valid power	V_{CC} min = 3.0 V	5.0	–	–	ms
	Pin reset after powered on		200	–	–	µs

USB Transceiver

USB 2.0 compliant in Full Speed and Hi-Speed modes.

Note
18. Measured at Max V_{CC}, 25 °C.

AC Electrical Characteristics

USB Transceiver

USB 2.0 compliant in Full-Speed and Hi-Speed modes.

Program Memory Read

Figure 12. Program Memory Read Timing Diagram

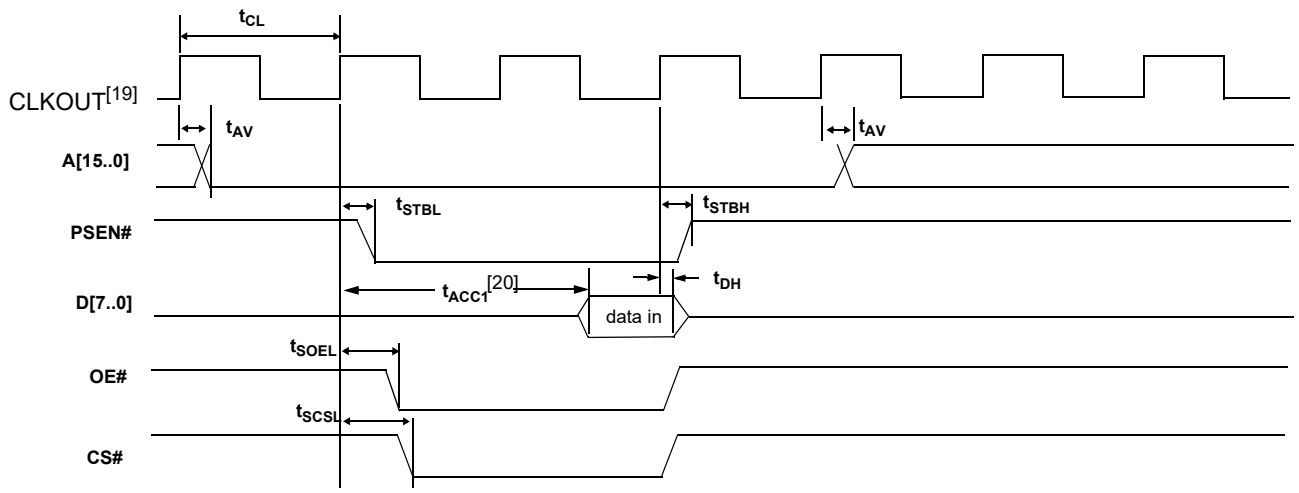

Table 15. Program Memory Read Parameters

Parameter	Description	Min	Typ	Max	Unit	Notes
t_{CL}	1/CLKOUT frequency	–	20.83	–	ns	48 MHz
		–	41.66	–	ns	24 MHz
		–	83.2	–	ns	12 MHz
t_{AV}	Delay from clock to valid address	0	–	10.7	ns	–
t_{STBL}	Clock to PSEN LOW	0	–	8	ns	–
t_{STBH}	Clock to PSEN HIGH	0	–	8	ns	–
t_{SOEL}	Clock to OE LOW	–	–	11.1	ns	–
t_{SCSL}	Clock to CS LOW	–	–	13	ns	–
t_{DSU}	Data setup to clock	9.6	–	–	ns	–
t_{DH}	Data hold time	0	–	–	ns	–

Notes
19. CLKOUT is shown with positive polarity.
20. t_{ACC1} is computed from these parameters as follows:
t_{ACC1}(24 MHz) = 3*t_{CL} – t_{AV} – t_{DSU} = 106 ns.
t_{ACC1}(48 MHz) = 3*t_{CL} – t_{AV} – t_{DSU} = 43 ns.

Data Memory Read[21]

Figure 13. Data Memory Read Timing Diagram

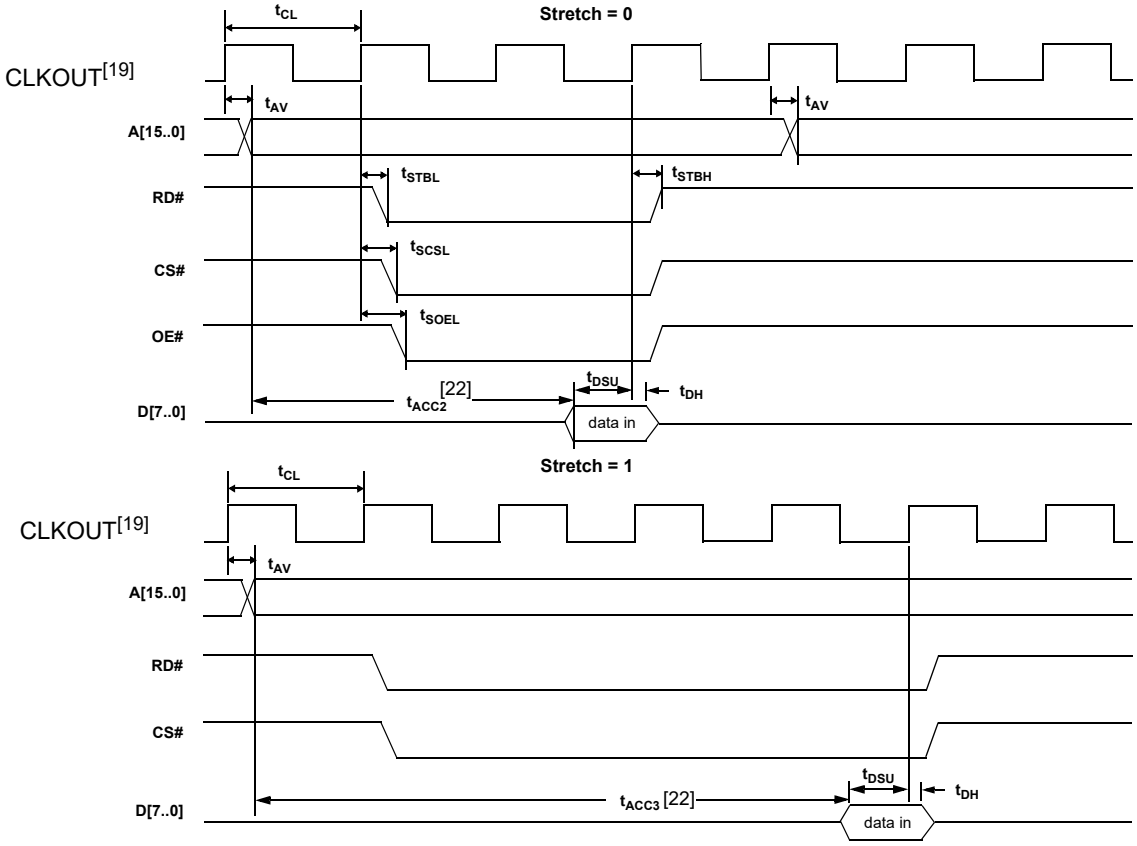

Table 16. Data Memory Read Parameters

Parameter	Description	Min	Typ	Max	Unit	Notes
t_{CL}	1/CLKOUT frequency	–	20.83	–	ns	48 MHz
		–	41.66	–	ns	24 MHz
		–	83.2	–	ns	12 MHz
t_{AV}	Delay from clock to valid address	–	–	10.7	ns	–
t_{STBL}	Clock to RD LOW	–	–	11	ns	–
t_{STBH}	Clock to RD HIGH	–	–	11	ns	–
t_{SCSL}	Clock to CS LOW	–	–	13	ns	–
t_{SOEL}	Clock to OE LOW	–	–	11.1	ns	–
t_{DSU}	Data setup to clock	9.6	–	–	ns	–
t_{DH}	Data hold time	0	–	–	ns	–

When using the AUTPOPTR1 or AUTOPTR2 to address external memory, the address of AUTOPTR1 is only active while either RD# or WR# is active. The address of AUTOPTR2 is active throughout the cycle and meets the address valid time for which is based on the stretch value.

Notes

21. The stretch memory cycle feature enables EZ-USB firmware to adjust the speed of data memory accesses not the program memory accesses. Details including typical strobe width timings can be found in the section 12.1.2 of the Technical Reference Manual. The address cycle width can be interpreted from these.
22. t_{ACC2} and t_{ACC3} are computed from these parameters as follows:
t_{ACC2}(24 MHz) = $3*t_{CL} – t_{AV} – t_{DSU}$ = 106 ns
t_{ACC2}(48 MHz) = $3*t_{CL} – t_{AV} – t_{DSU}$ = 43 ns
t_{ACC3}(24 MHz) = $5*t_{CL} – t_{AV} – t_{DSU}$ = 190 ns
t_{ACC3}(48 MHz) = $5*t_{CL} – t_{AV} – t_{DSU}$ = 86 ns

Data Memory Write[23]

Figure 14. Data Memory Write Timing Diagram

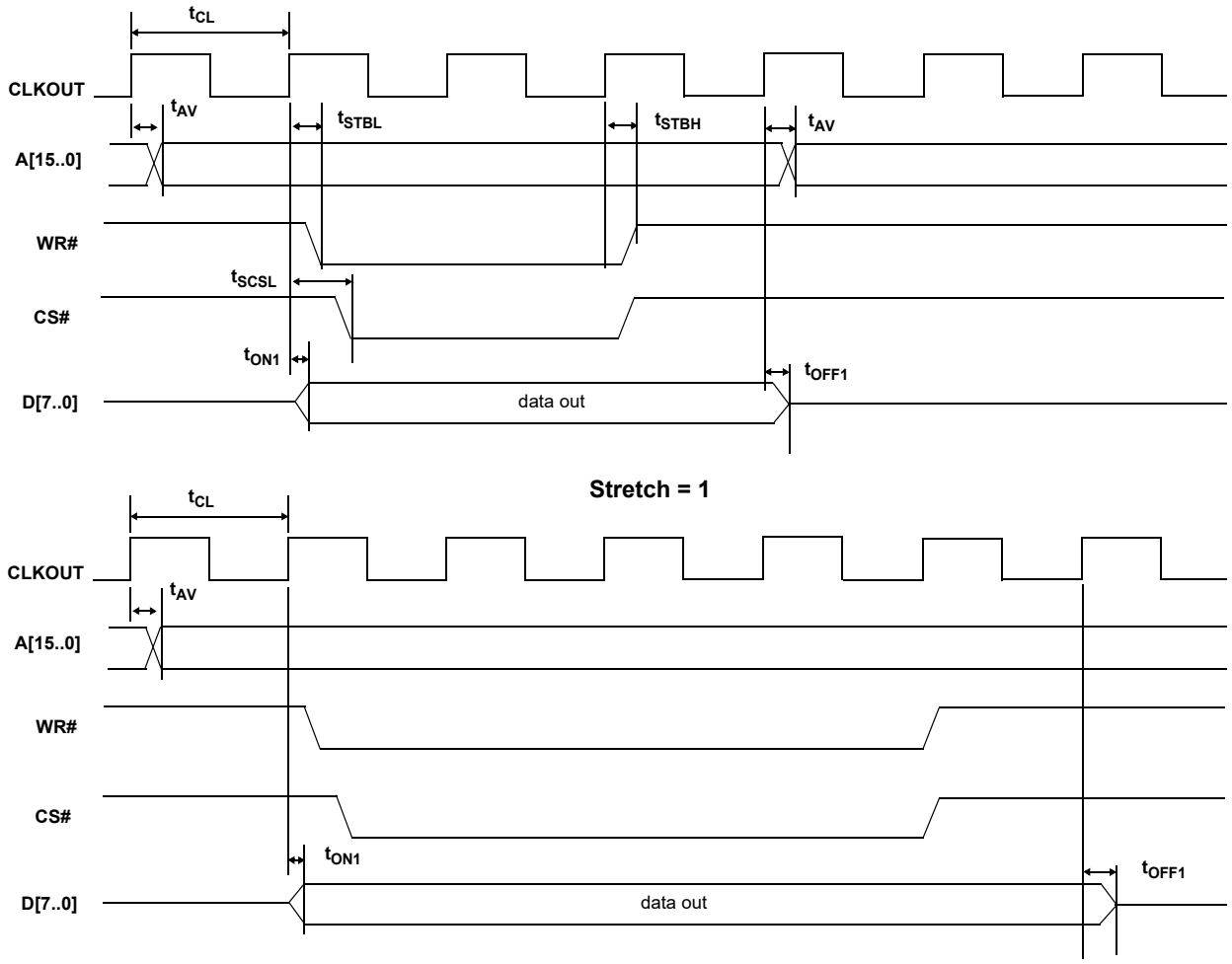

Table 17. Data Memory Write Parameters

Parameter	Description	Min	Max	Unit	Notes
t_{AV}	Delay from clock to valid address	0	10.7	ns	–
t_{STBL}	Clock to WR pulse LOW	0	11.2	ns	–
t_{STBH}	Clock to WR pulse HIGH	0	11.2	ns	–
t_{SCSL}	Clock to CS pulse LOW	–	13.0	ns	–
t_{ON1}	Clock to data turn-on	0	13.1	ns	–
t_{OFF1}	Clock to data hold time	0	13.1	ns	–

When using the AUTPOPTR1 or AUTOPTR2 to address external memory, the address of AUTOPTR1 is only active while either RD# or WR# are active. The address of AUTOPTR2 is active throughout the cycle and meets the address valid time for which is based on the stretch value.

Note
23. The stretch memory cycle feature enables EZ-USB firmware to adjust the speed of data memory accesses not the program memory accesses. Details including typical strobe width timings can be found in the section 12.1.2 of the Technical Reference Manual. The address cycle width can be interpreted from these.

PORTC Strobe Feature Timings

The RD# and WR# are present in the 100-pin version and the 128-pin package. In these 100-pin and 128-pin versions, an 8051 control bit can be set to pulse the RD# and WR# pins when the 8051 reads from or writes to PORTC. This feature is enabled by setting PORTCSTB bit in CPUCS register.

The RD# and WR# strobes are asserted for two CLKOUT cycles when PORTC is accessed.

The WR# strobe is asserted two clock cycles after PORTC is updated and is active for two clock cycles after that, as shown in Figure 16.

As for read, the value of PORTC three clock cycles before the assertion of RD# is the value that the 8051 reads in. The RD# is pulsed for two clock cycles after three clock cycles from the point when the 8051 has performed a read function on PORTC.

The RD# signal prompts the external logic to prepare the next data byte. Nothing gets sampled internally on assertion of the RD# signal itself; it is just a prefetch type signal to get the next data byte prepared. So, using it with that in mind easily meets the setup time to the next read.

The purpose of this pulsing of RD# is to allow the external peripheral to know that the 8051 is done reading PORTC and the data was latched into PORTC three CLKOUT cycles before asserting the RD# signal. After the RD# is pulsed, the external logic can update the data on PORTC.

Following is the timing diagram of the read and write strobing function on accessing PORTC. Refer to Data Memory Read[21] and Data Memory Write[23] for details on propagation delay of RD# and WR# signals.

Figure 16. WR# Strobe Function when PORTC is Accessed by 8051

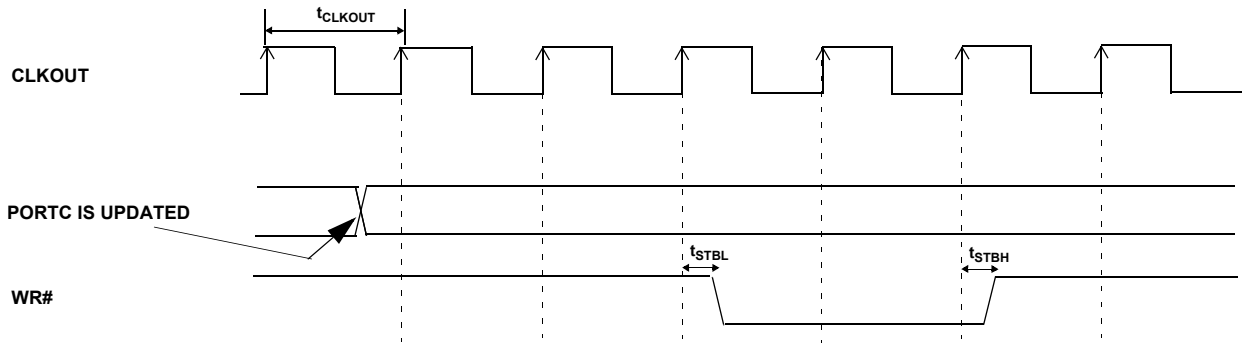

Figure 17. RD# Strobe Function when PORTC is Accessed by 8051

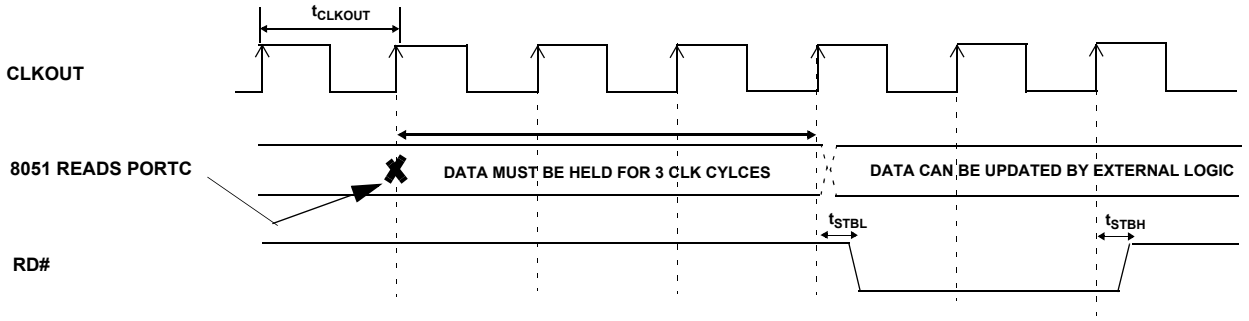

GPIF Synchronous Signals

Figure 18. GPIF Synchronous Signals Timing Diagram[24]

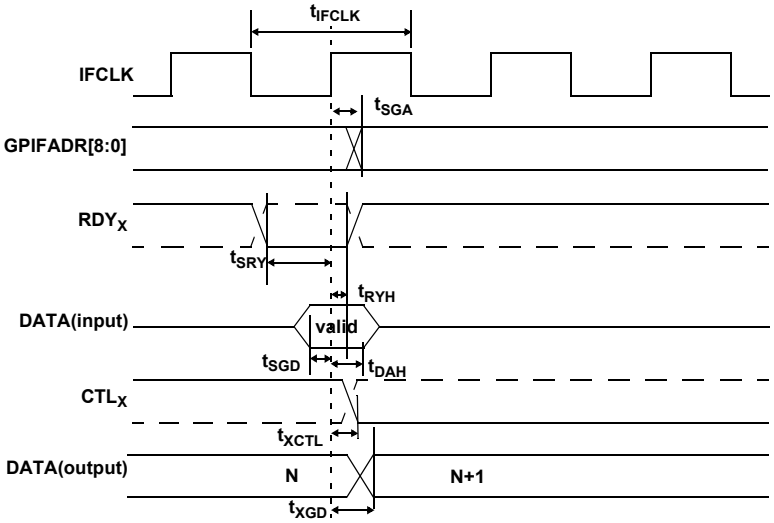

Table 18. GPIF Synchronous Signals Parameters with Internally Sourced IFCLK[24, 25]

Parameter	Description	Min	Max	Typ		Unit
				Min	Max	
t_{IFCLK}	IFCLK Period	20.83	–	–	–	ns
t_{SRY}	RDY_X to clock setup time	8.9	–	–	–	ns
t_{RYH}	RDY_X Hold Time	0	–	–	–	ns
t_{SGD}	GPIF data to clock setup time	9.2	–	–	–	ns
t_{DAH}	GPIF data hold time	0	–	–	–	ns
t_{SGA}	Clock to GPIF address propagation delay	–	7.5	–	–	ns
t_{XGD}	Clock to GPIF data output propagation delay	–	10	–	–	ns
t_{XCTL}	Clock to CTL_X output propagation delay	–	6.7	–	–	ns
t_{IFCLKR}	IFCLK rise time	–	–	–	900	ps
t_{IFCLKF}	IFCLK fall time	–	–	–	900	ps
$t_{IFCLKOD}$	IFCLK output duty cycle	–	–	49	51	%
t_{IFCLKJ}	IFCLK jitter peak to peak	–	–	–	300	ps

Table 19. GPIF Synchronous Signals Parameters with Externally Sourced IFCLK[25]

Parameter	Description	Min	Max	Unit
t_{IFCLK}	IFCLK period[26]	20.83	200	ns
t_{SRY}	RDY_X to clock setup time	2.9	–	ns
t_{RYH}	RDY_X Hold Time	3.7	–	ns
t_{SGD}	GPIF data to clock setup time	3.2	–	ns
t_{DAH}	GPIF data hold time	4.5	–	ns
t_{SGA}	Clock to GPIF address propagation delay	–	11.5	ns
t_{XGD}	Clock to GPIF data output propagation delay	–	15	ns
t_{XCTL}	Clock to CTL_X output propagation delay	–	10.7	ns

Notes
24. Dashed lines denote signals with programmable polarity.
25. GPIF asynchronous RDY_x signals have a minimum setup time of 50 ns when using the internal 48-MHz IFCLK.
26. IFCLK must not exceed 48 MHz.

Slave FIFO Synchronous Read

Figure 19. Slave FIFO Synchronous Read Timing Diagram[24]

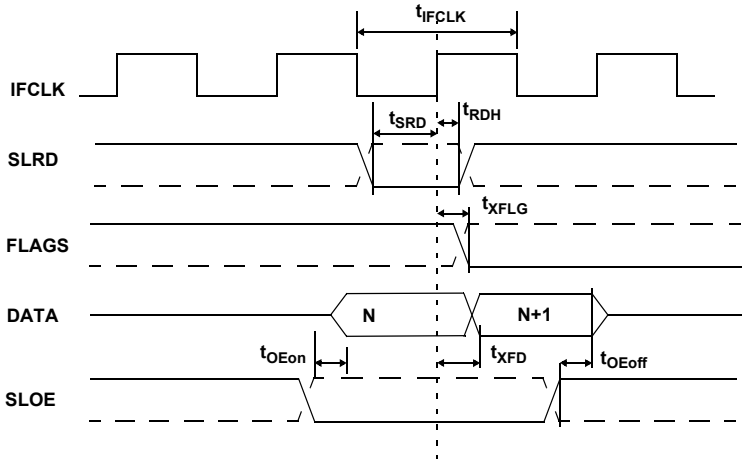

Table 20. Slave FIFO Synchronous Read Parameters with Internally Sourced IFCLK[25]

Parameter	Description	Min	Max	Typ		Unit
				Min	Max	
t_{IFCLK}	IFCLK period	20.83	–	–	–	ns
t_{SRD}	SLRD to clock setup time	18.7	–	–	–	ns
t_{RDH}	Clock to SLRD hold time	0	–	–	–	ns
t_{OEon}	SLOE turn on to FIFO data valid	–	10.5	–	–	ns
t_{OEoff}	SLOE turn off to FIFO data hold	–	10.5	–	–	ns
t_{XFLG}	Clock to FLAGS output propagation delay	–	9.5	–	–	ns
t_{XFD}	Clock to FIFO data output propagation delay	–	11	–	–	ns
t_{IFCLKR}	IFCLK rise time	–	–	–	900	ps
t_{IFCLKF}	IFCLK fall time	–	–	–	900	ps
$t_{IFCLKOD}$	IFCLK output duty cycle	–	–	49	51	%
t_{IFCLKJ}	IFCLK jitter peak to peak	–	–	–	300	ps

Table 21. Slave FIFO Synchronous Read Parameters with Externally Sourced IFCLK[25]

Parameter	Description	Min	Max	Unit
t_{IFCLK}	IFCLK period	20.83	200	ns
t_{SRD}	SLRD to clock setup time	12.7	–	ns
t_{RDH}	Clock to SLRD hold time	3.7	–	ns
t_{OEon}	SLOE turn on to FIFO data valid	–	10.5	ns
t_{OEoff}	SLOE turn off to FIFO data hold	–	10.5	ns
t_{XFLG}	Clock to FLAGS output propagation delay	–	13.5	ns
t_{XFD}	Clock to FIFO data output propagation delay	–	15	ns

Slave FIFO Asynchronous Read

Figure 20. Slave FIFO Asynchronous Read Timing Diagram[24]

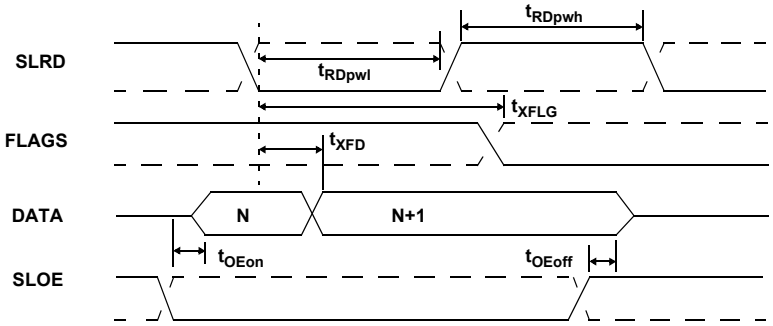

Table 22. Slave FIFO Asynchronous Read Parameters[27]

Parameter	Description	Min	Max	Unit
t_{RDpwl}	SLRD pulse width LOW	50	–	ns
t_{RDpwh}	SLRD pulse width HIGH	50	–	ns
t_{XFLG}	SLRD to FLAGS output propagation delay	–	70	ns
t_{XFD}	SLRD to FIFO data output propagation delay	–	15	ns
t_{OEon}	SLOE turn-on to FIFO data valid	–	10.5	ns
t_{OEoff}	SLOE turn-off to FIFO data hold	–	10.5	ns

Note
27. Slave FIFO asynchronous parameter values use internal IFCLK setting at 48 MHz.

Slave FIFO Synchronous Write

Figure 21. Slave FIFO Synchronous Write Timing Diagram[24]

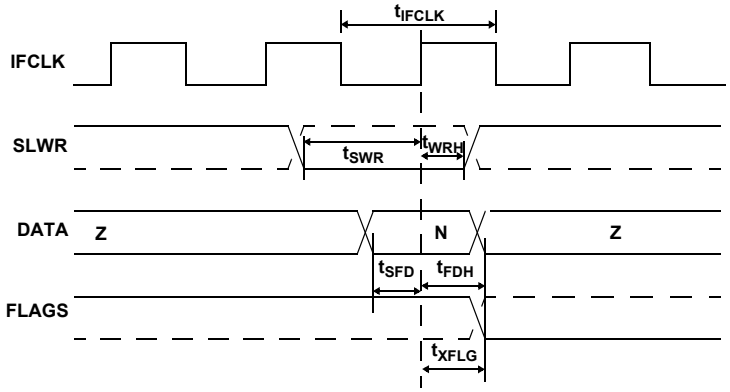

Table 23. Slave FIFO Synchronous Write Parameters with Internally Sourced IFCLK[25]

Parameter	Description	Min	Max	Unit
t_{IFCLK}	IFCLK period	20.83	–	ns
t_{SWR}	SLWR to clock setup time	10.4	–	ns
t_{WRH}	Clock to SLWR hold time	0	–	ns
t_{SFD}	FIFO data to clock setup time	9.2	–	ns
t_{FDH}	Clock to FIFO data hold time	0	–	ns
t_{XFLG}	Clock to FLAGS output propagation time	–	9.5	ns

Table 24. Slave FIFO Synchronous Write Parameters with Externally Sourced IFCLK[25]

Parameter	Description	Min	Max	Unit
t_{IFCLK}	IFCLK Period	20.83	200	ns
t_{SWR}	SLWR to clock setup time	12.1	–	ns
t_{WRH}	Clock to SLWR hold time	3.6	–	ns
t_{SFD}	FIFO data to clock setup time	3.2	–	ns
t_{FDH}	Clock to FIFO data hold time	4.5	–	ns
t_{XFLG}	Clock to FLAGS output propagation time	–	13.5	ns

Slave FIFO Asynchronous Write

Figure 22. Slave FIFO Asynchronous Write Timing Diagram[24]

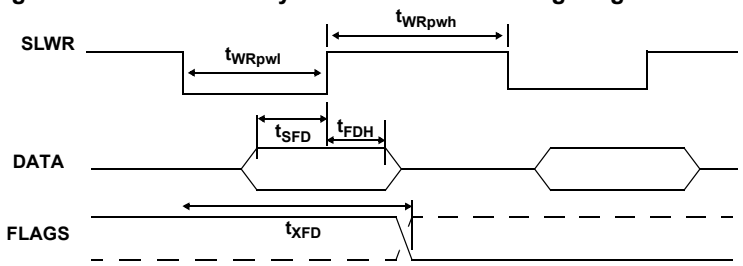

Table 25. Slave FIFO Asynchronous Write Parameters with Internally Sourced IFCLK[27]

Parameter	Description	Min	Max	Unit
t_{WRpwl}	SLWR pulse LOW	50	–	ns
t_{WRpwh}	SLWR pulse HIGH	70	–	ns
t_{SFD}	SLWR to FIFO DATA setup time	10	–	ns
t_{FDH}	FIFO DATA to SLWR hold time	10	–	ns
t_{XFD}	SLWR to FLAGS output propagation delay	–	70	ns

Slave FIFO Synchronous Packet End Strobe

Figure 23. Slave FIFO Synchronous Packet End Strobe Timing Diagram[24]

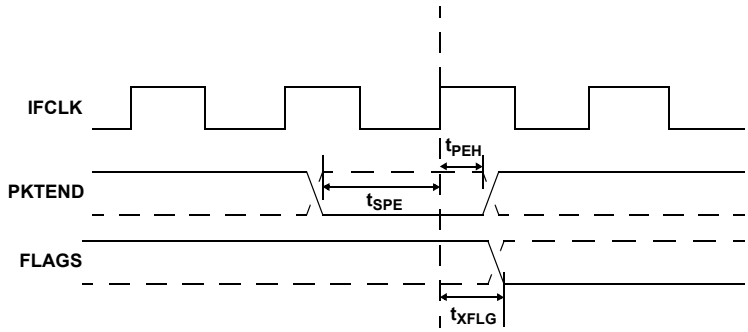

Table 26. Slave FIFO Synchronous Packet End Strobe Parameters with Internally Sourced IFCLK[25]

Parameter	Description	Min	Max	Unit
t_{IFCLK}	IFCLK period	20.83	–	ns
t_{SPE}	PKTEND to clock setup time	14.6	–	ns
t_{PEH}	Clock to PKTEND hold time	0	–	ns
t_{XFLG}	Clock to FLAGS output propagation delay	–	9.5	ns

Table 27. Slave FIFO Synchronous Packet End Strobe Parameters with Externally Sourced IFCLK[25]

Parameter	Description	Min	Max	Unit
t_{IFCLK}	IFCLK period	20.83	200	ns
t_{SPE}	PKTEND to clock setup time	8.6	–	ns
t_{PEH}	Clock to PKTEND hold time	2.5	–	ns
t_{XFLG}	Clock to FLAGS output propagation delay	–	13.5	ns

There is no specific timing requirement that should be met for asserting the PKTEND pin to asserting SLWR. PKTEND can be asserted with the last data value clocked into the FIFOs or thereafter. The setup time t_{SPE} and the hold time t_{PEH} must be met.

Although there are no specific timing requirements for PKTEND assertion, there is a specific corner-case condition that needs attention while using the PKTEND pin to commit a one byte or word packet. There is an additional timing requirement that needs to be met when the FIFO is configured to operate in auto mode and it is required to send two packets back to back: a full packet (full defined as the number of bytes in the FIFO meeting the level set in AUTOINLEN register) committed automatically followed by a short one byte or word packet committed manually using the PKTEND pin. In this scenario, the user must ensure to assert PKTEND, at least one clock cycle after the rising edge that caused the last byte or word to be clocked into the previous auto committed packet. Figure 24 shows this scenario. X is the value the AUTOINLEN register is set to when the IN endpoint is configured to be in auto mode.

Figure 24 shows a scenario where two packets are committed. The first packet gets committed automatically when the number of bytes in the FIFO reaches X (value set in AUTOINLEN register) and the second one byte/word short packet being committed manually using PKTEND.

Note that there is at least one IFCLK cycle timing between the assertion of PKTEND and clocking of the last byte of the previous packet (causing the packet to be committed automatically). Failing to adhere to this timing results in the FX2 failing to send the one byte or word short packet.

Figure 24. Slave FIFO Synchronous Write Sequence and Timing Diagram[24]

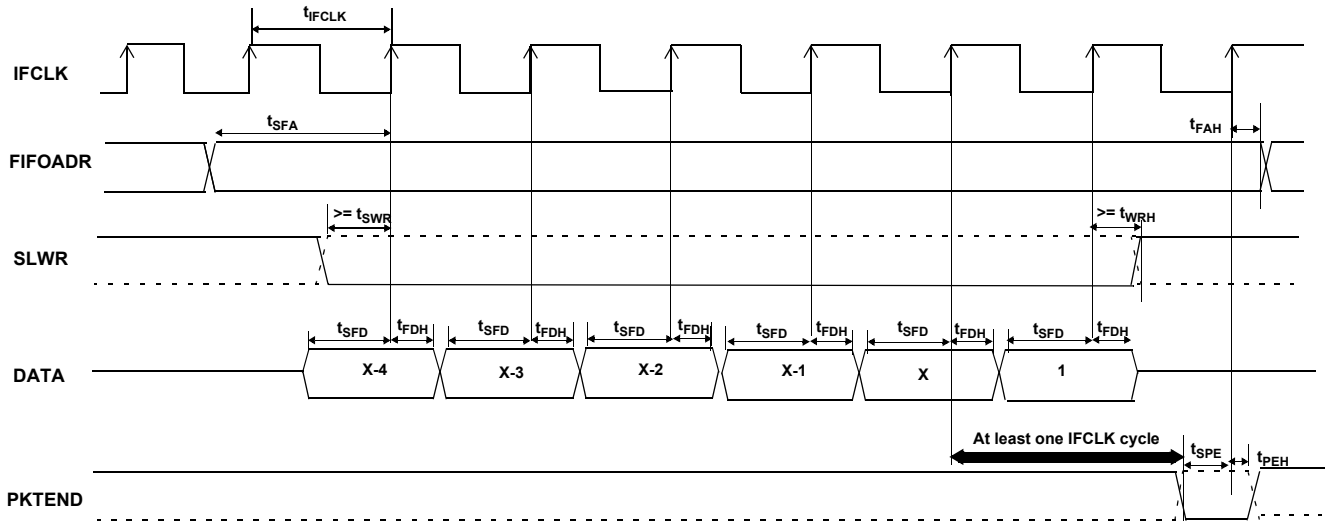

Slave FIFO Asynchronous Packet End Strobe

Figure 25. Slave FIFO Asynchronous Packet End Strobe Timing Diagram[24]

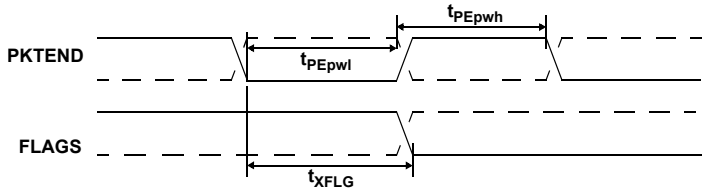

Table 28. Slave FIFO Asynchronous Packet End Strobe Parameters[27]

Parameter	Description	Min	Max	Unit
t_{PEpwl}	PKTEND pulse width LOW	50	–	ns
t_{PWpwh}	PKTEND pulse width HIGH	50	–	ns
t_{XFLG}	PKTEND to FLAGS output propagation delay	–	115	ns

Slave FIFO Output Enable

Figure 26. Slave FIFO Output Enable Timing Diagram[24]

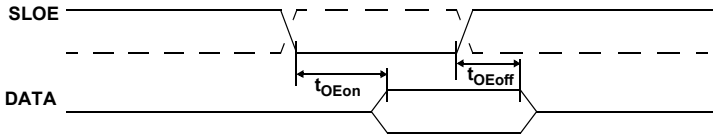

Table 29. Slave FIFO Output Enable Parameters

Parameter	Description	Min	Max	Unit
t_{OEon}	SLOE assert to FIFO DATA output		10.5	ns
t_{OEoff}	SLOE deassert to FIFO DATA hold		10.5	ns

Slave FIFO Address to Flags/Data

Figure 27. Slave FIFO Address to Flags/Data Timing Diagram[24]

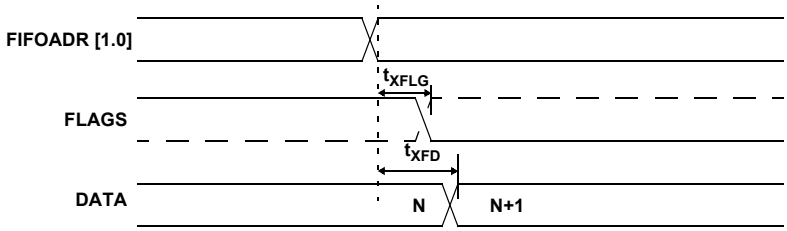

Table 30. Slave FIFO Address to Flags/Data Parameters

Parameter	Description	Min	Max	Unit
t_{XFLG}	FIFOADR[1:0] to FLAGS output propagation delay	–	10.7	ns
t_{XFD}	FIFOADR[1:0] to FIFODATA output propagation delay	–	14.3	ns

Slave FIFO Synchronous Address

Figure 28. Slave FIFO Synchronous Address Timing Diagram[24]

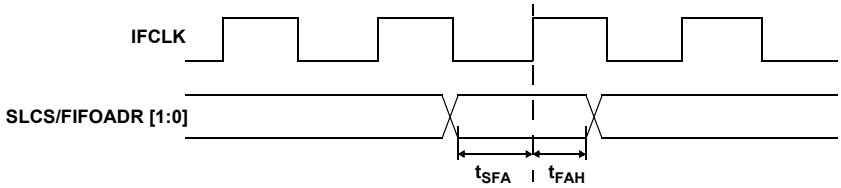

Table 31. Slave FIFO Synchronous Address Parameters[25]

Parameter	Description	Min	Max	Unit
t_{IFCLK}	Interface clock period	20.83	200	ns
t_{SFA}	FIFOADR[1:0] to clock setup time	25	–	ns
t_{FAH}	Clock to FIFOADR[1:0] hold time	10	–	ns

Slave FIFO Asynchronous Address

Figure 29. Slave FIFO Asynchronous Address Timing Diagram[24]

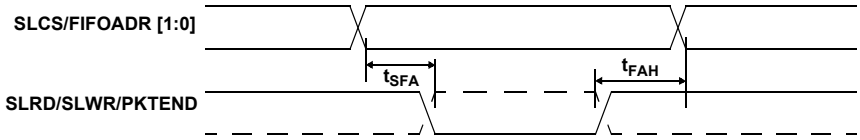

Table 32. Slave FIFO Asynchronous Address Parameters[27]

Parameter	Description	Min	Max	Unit
t_{SFA}	FIFOADR[1:0] to SLRD/SLWR/PKTEND setup time	10	–	ns
t_{FAH}	RD/WR/PKTEND to FIFOADR[1:0] hold time	10	–	ns

Sequence Diagram

Single and Burst Synchronous Read Example

Figure 30. Slave FIFO Synchronous Read Sequence and Timing Diagram[24]

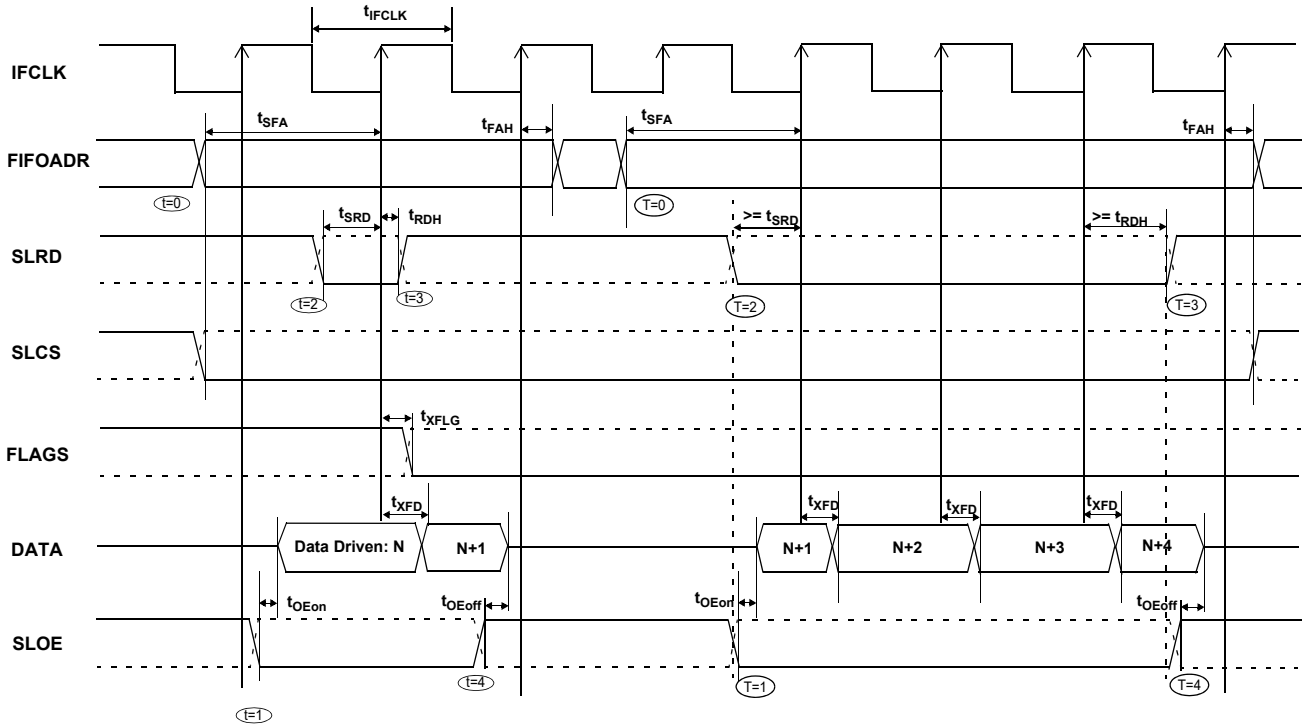

Figure 31. Slave FIFO Synchronous Sequence of Events Diagram

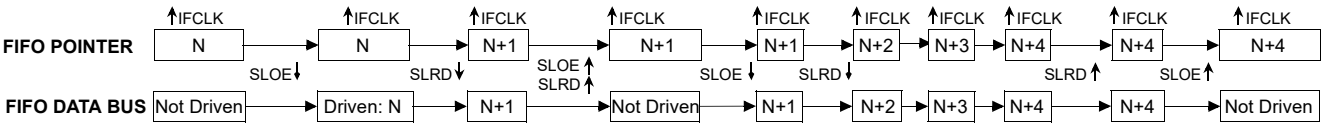

Figure 30 on page 52 shows the timing relationship of the SLAVE FIFO signals during a synchronous FIFO read using IFCLK as the synchronizing clock. The diagram illustrates a single read followed by a burst read.

- At t = 0, the FIFO address is stable and the signal SLCS is asserted (SLCS may be tied LOW in some applications). Note that t_{SFA} has a minimum of 25 ns. This means that when IFCLK is running at 48 MHz, the FIFO address setup time is more than one IFCLK cycle.
- At t = 1, SLOE is asserted. SLOE is an output enable only, whose sole function is to drive the data bus. The data that is driven on the bus is the data that the internal FIFO pointer is currently pointing to. In this example it is the first data value in the FIFO. **Note**: the data is prefetched and is driven on the bus when SLOE is asserted.
- At t = 2, SLRD is asserted. SLRD must meet the setup time of t_{SRD} (time from asserting the SLRD signal to the rising edge of the IFCLK) and maintain a minimum hold time of t_{RDH} (time from the IFCLK edge to the deassertion of the SLRD signal). If the SLCS signal is used, it must be asserted before SLRD is asserted (The SLCS and SLRD signals must both be asserted to start a valid read condition).
- The FIFO pointer is updated on the rising edge of the IFCLK, while SLRD is asserted. This starts the propagation of data from the newly addressed location to the data bus. After a propagation delay of t_{XFD} (measured from the rising edge of IFCLK) the new data value is present. N is the first data value read from the FIFO. To have data on the FIFO data bus, SLOE MUST also be asserted.

The same sequence of events are shown for a burst read and are marked with the time indicators of T = 0 through 5.

Note For the burst mode, the SLRD and SLOE are left asserted during the entire duration of the read. In the burst read mode, when SLOE is asserted, data indexed by the FIFO pointer is on the data bus. During the first read cycle, on the rising edge of the clock, the FIFO pointer is updated and incremented to point to address N+1. For each subsequent rising edge of IFCLK, while the SLRD is asserted, the FIFO pointer is incremented and the next data value is placed on the data bus.

Single and Burst Synchronous Write

Figure 32. Slave FIFO Synchronous Write Sequence and Timing Diagram[24]

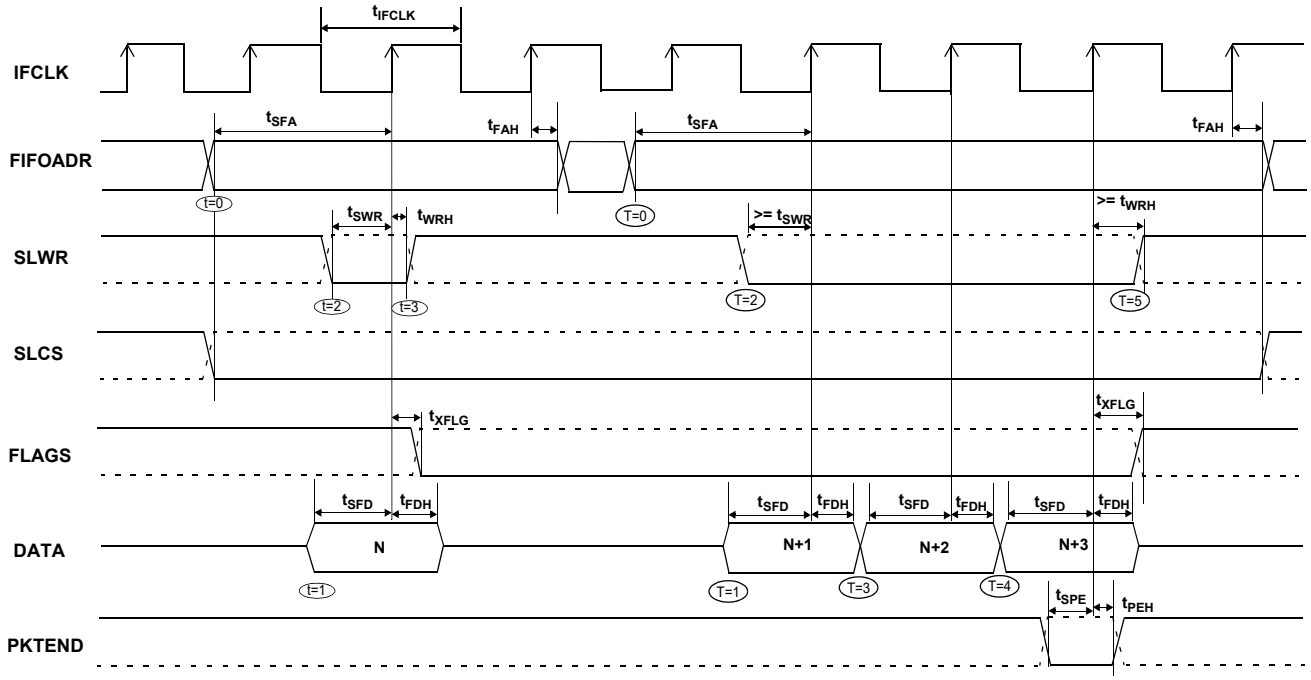

Figure 32 shows the timing relationship of the SLAVE FIFO signals during a synchronous write using IFCLK as the synchronizing clock. The diagram illustrates a single write followed by burst write of three bytes and committing all four bytes as a short packet using the PKTEND pin.

- At t = 0 the FIFO address is stable and the signal SLCS is asserted. (SLCS may be tied LOW in some applications) Note that t_{SFA} has a minimum of 25 ns. This means when IFCLK is running at 48 MHz, the FIFO address setup time is more than one IFCLK cycle.
- At t = 1, the external master/peripheral must outputs the data value onto the data bus with a minimum set up time of t_{SFD} before the rising edge of IFCLK.
- At t = 2, SLWR is asserted. The SLWR must meet the setup time of t_{SWR} (time from asserting the SLWR signal to the rising edge of IFCLK) and maintain a minimum hold time of t_{WRH} (time from the IFCLK edge to the deassertion of the SLWR signal). If the SLCS signal is used, it must be asserted with SLWR or before SLWR is asserted (The SLCS and SLWR signals must both be asserted to start a valid write condition).
- While the SLWR is asserted, data is written to the FIFO and on the rising edge of the IFCLK, the FIFO pointer is incremented. The FIFO flag is also updated after a delay of t_{XFLG} from the rising edge of the clock.

The same sequence of events are also shown for a burst write and are marked with the time indicators of T = 0 through 5.

Note For the burst mode, SLWR and SLCS are left asserted for the entire duration of writing all the required data values. In this burst write mode, after the SLWR is asserted, the data on the FIFO data bus is written to the FIFO on every rising edge of IFCLK. The FIFO pointer is updated on each rising edge of IFCLK. In Figure 32, after the four bytes are written to the FIFO, SLWR is deasserted. The short 4 byte packet can be committed to the host by asserting the PKTEND signal.

There is no specific timing requirement that should be met for asserting PKTEND signal with regards to asserting the SLWR signal. PKTEND can be asserted with the last data value or thereafter. The only requirement is that the setup time t_{SPE} and the hold time t_{PEH} must be met. In the scenario of Figure 32, the number of data values committed includes the last value written to the FIFO. In this example, both the data value and the PKTEND signal are clocked on the same rising edge of IFCLK. PKTEND can also be asserted in subsequent clock cycles. The FIFOADDR lines should be held constant during the PKTEND assertion.

Although there are no specific timing requirement for the PKTEND assertion, there is a specific corner-case condition that needs attention while using the PKTEND to commit a one byte/word packet. Additional timing requirements exist when the FIFO is configured to operate in auto mode and it is desired to send two packets: a full packet ('full' defined as the number of bytes in the FIFO meeting the level set in the AUTOINLEN register) committed automatically followed by a short one byte or word packet committed manually using the PKTEND pin.

In this case, the external master must ensure to assert the PKTEND pin at least one clock cycle after the rising edge that caused the last byte or word that needs to be clocked into the previous auto committed packet (the packet with the number of bytes equal to what is set in the AUTOINLEN register). Refer to Figure 24 on page 50 for further details on this timing.

Sequence Diagram of a Single and Burst Asynchronous Read

Figure 33. Slave FIFO Asynchronous Read Sequence and Timing Diagram[24]

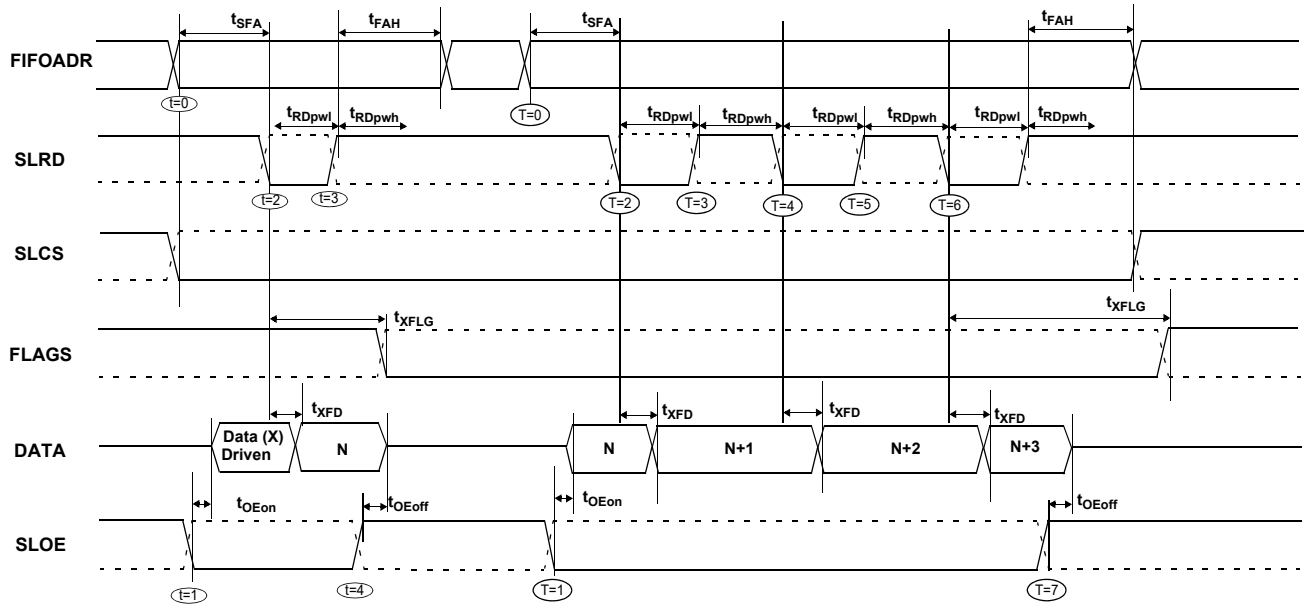

Figure 34. Slave FIFO Asynchronous Read Sequence of Events Diagram

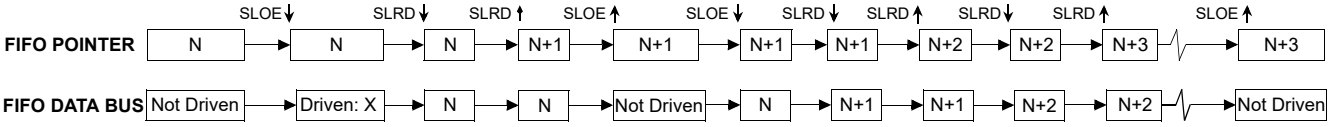

Figure 33 shows the timing relationship of the SLAVE FIFO signals during an asynchronous FIFO read. It shows a single read followed by a burst read.

- At t = 0, the FIFO address is stable and the SLCS signal is asserted.
- At t = 1, SLOE is asserted. This results in the data bus being driven. The data that is driven on to the bus is the previous data, the data that was in the FIFO from anearlier read cycle.
- At t = 2, SLRD is asserted. The SLRD must meet the minimum active pulse of t_{RDpwl} and minimum de-active pulse width of t_{RDpwh}. If SLCS is used, then SLCS must be asserted before SLRD is asserted (The SLCS and SLRD signals must both be asserted to start a valid read condition.)
- The data that is driven, after asserting SLRD, is the updated data from the FIFO. This data is valid after a propagation delay of t_{XFD} from the activating edge of SLRD. In Figure 33, data N is the first valid data read from the FIFO. For data to appear on the data bus during the read cycle (SLRD is asserted), SLOE must be in an asserted state. SLRD and SLOE can also be tied together.

The same sequence of events is also shown for a burst read marked with T = 0 through 5.

Note In the burst read mode, during SLOE is asserted, the data bus is in a driven state and outputs the previous data. After SLRD is asserted, the data from the FIFO is driven on the data bus (SLOE must also be asserted) and then the FIFO pointer is incremented.

Sequence Diagram of a Single and Burst Asynchronous Write

Figure 35. Slave FIFO Asynchronous Write Sequence and Timing Diagram[24]

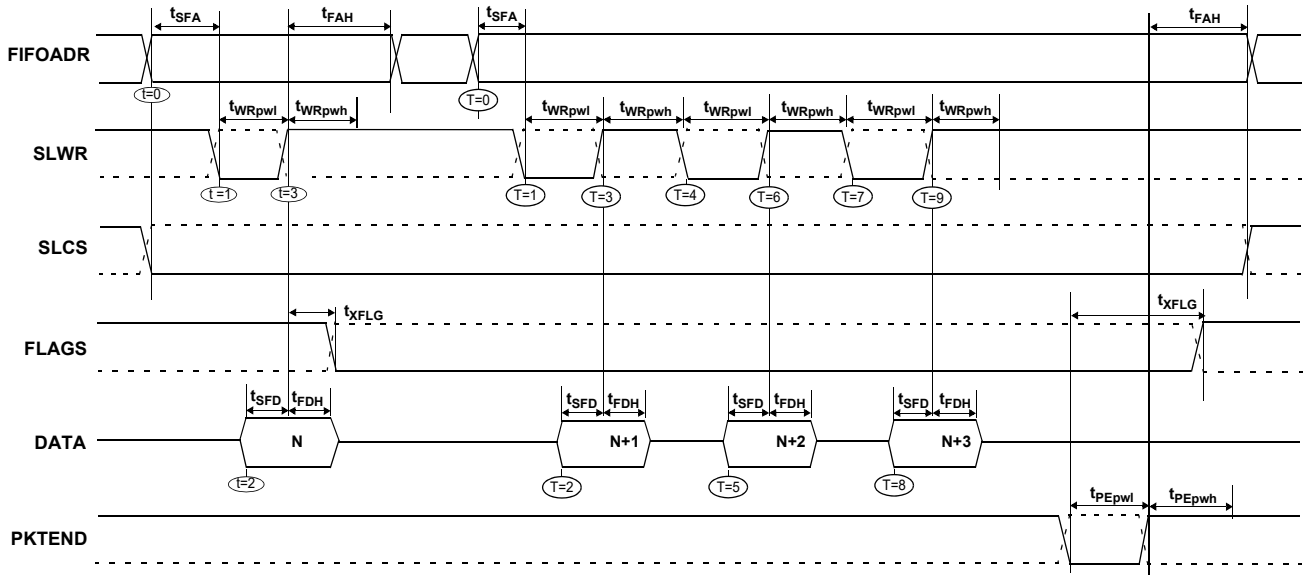

Figure 35 shows the timing relationship of the SLAVE FIFO write in an asynchronous mode. The diagram shows a single write followed by a burst write of 3 bytes and committing the 4byte short packet using PKTEND.

- At t = 0 the FIFO address is applied, ensuring that it meets the setup time of t_{SFA}. If SLCS is used, it must also be asserted (SLCS may be tied LOW in some applications).
- At t = 1 SLWR is asserted. SLWR must meet the minimum active pulse of t_{WRpwl} and minimum de-active pulse width of t_{WRpwh}. If the SLCS is used, it must be asserted with SLWR or before SLWR is asserted.
- At t = 2, data must be present on the bus t_{SFD} before the deasserting edge of SLWR.
- At t = 3, deasserting SLWR causes the data to be written from the data bus to the FIFO and then increments the FIFO pointer. The FIFO flag is also updated after t_{XFLG} from the deasserting edge of SLWR.

The same sequence of events is shown for a burst write and is indicated by the timing marks of T = 0 through 5.

Note In the burst write mode, after SLWR is deasserted, the data is written to the FIFO and then the FIFO pointer is incremented to the next byte in the FIFO. The FIFO pointer is post incremented.

In Figure 35, after the four bytes are written to the FIFO and SLWR is deasserted, the short 4-byte packet can be committed to the host using PKTEND. The external device should be designed to not assert SLWR and the PKTEND signal at the same time. It should be designed to assert the PKTEND after SLWR is deasserted and met the minimum deasserted pulse width. The FIFOADDR lines have to held constant during the PKTEND assertion.

Ordering Information

Table 33. Ordering Information

Ordering Code	Package Type	RAM Size	# Prog I/Os	8051 Address /Data Bus	Serial Debug[28]
Ideal for Battery Powered Applications					
CY7C68014A-128AXC	128 TQFP – Pb-free	16 K	40	16-/8-bit	Y
CY7C68014A-100AXC	100 TQFP – Pb-free	16 K	40	–	Y
CY7C68014A-56PVXC	56 SSOP – Pb-free	16 K	24	–	N
CY7C68014A-56LTXC	56 QFN - Pb-free	16 K	24	–	N
CY7C68016A-56LTXC	56 QFN - Pb-free	16 K	26	–	N
CY7C68016A-56LTXCT	56 QFN - Pb-free	16 K	26	–	N
Ideal for Non Battery Powered Applications					
CY7C68013A-128AXC	128 TQFP – Pb-free	16 K	40	16-/8-bit	Y
CY7C68013A-128AXI	128 TQFP – Pb-free (Industrial)	16 K	40	16-/8-bit	Y
CY7C68013A-100AXC	100 TQFP – Pb-free	16 K	40	–	Y
CY7C68013A-100AXI	100 TQFP – Pb-free (Industrial)	16 K	40	–	Y
CY7C68013A-56PVXC	56 SSOP – Pb-free	16 K	24	–	N
CY7C68013A-56PVXCT	56 SSOP – Pb-free	16 K	24	–	N
CY7C68013A-56PVXI	56 SSOP – Pb-free (Industrial)	16 K	24	–	N
CY7C68013A-56BAXC	56 VFBGA – Pb-free	16 K	24	–	N
CY7C68013A-56BAXCT	56 VFBGA – Pb-free	16 K	24	–	N
CY7C68013A-56LTXC	56 QFN – Pb-free	16 K	24	–	N
CY7C68013A-56LTXCT	56 QFN – Pb-free	16 K	24	–	N
CY7C68013A-56LTXI	56 QFN – Pb-free (Industrial)	16 K	24	–	N
CY7C68015A-56LTXC	56 QFN – Pb-free	16 K	26	–	N
Development Tool Kit					
CY3684	EZ-USB FX2LP development kit				
Reference Design Kit					
CY4611B	USB 2.0 to ATA/ATAPI reference design using EZ-USB FX2LP				

Ordering Code Definitions

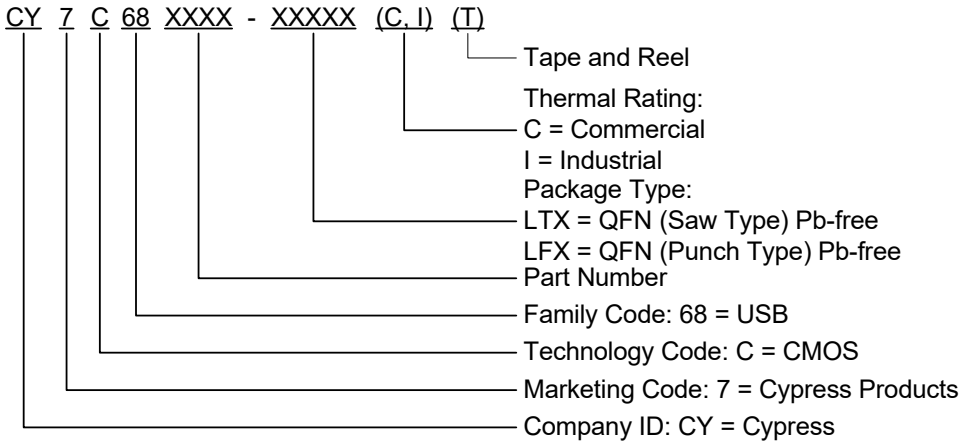

Note
28. As UART is not available in the 56-pin package of CY7C68013A, serial port debugging using Keil Monitor is not possible.

Package Diagrams

The FX2LP is available in five packages:

- 56-pin SSOP
- 56-pin QFN
- 100-pin TQFP
- 128-pin TQFP
- 56-ball VFBGA

Figure 36. 56-Pin Shrunk Small Outline Package O56 (51-85062)

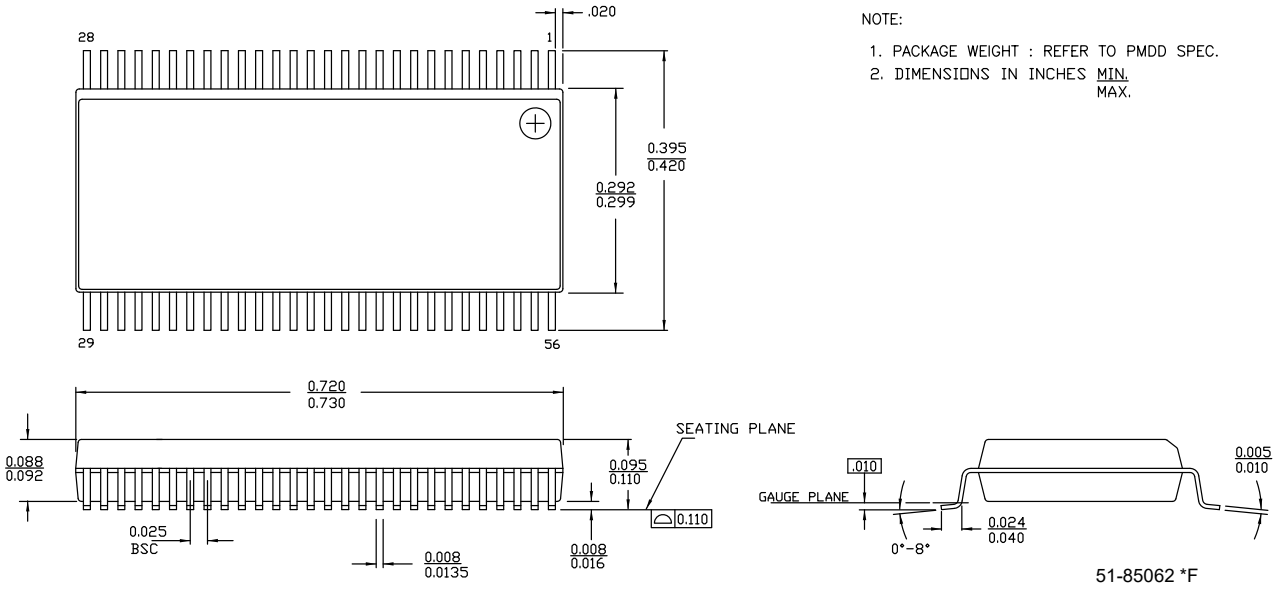

Figure 37. 56-Pin QFN 8 × 8 mm Sawn Version (001-53450)

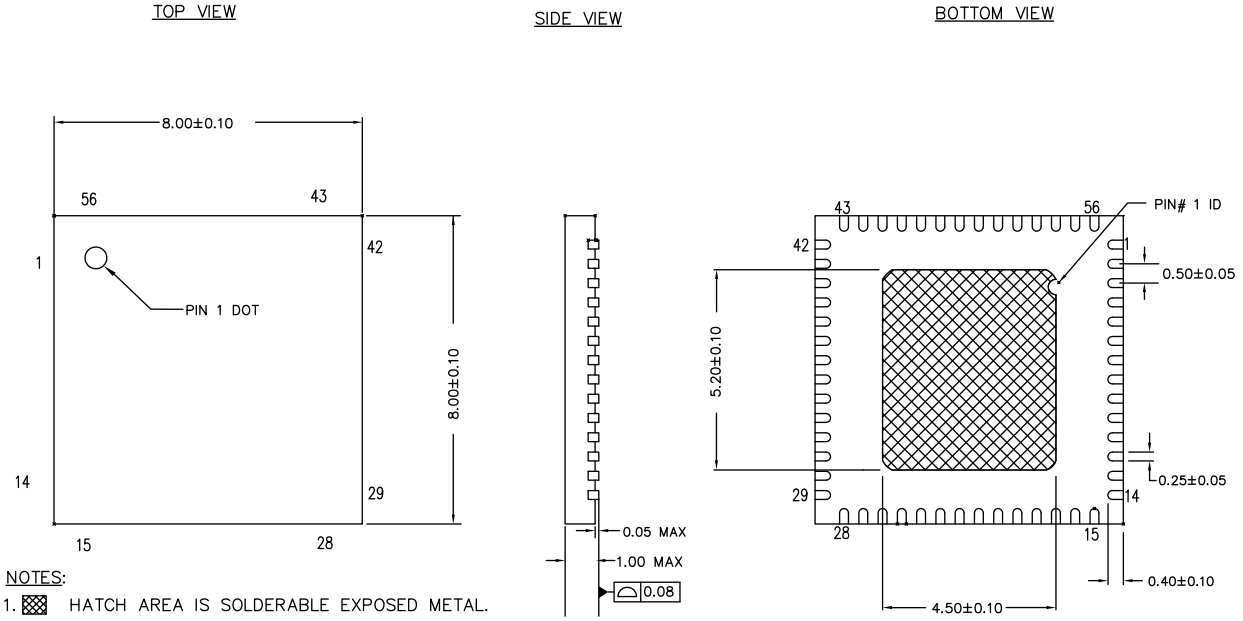

NOTES:
1. HATCH AREA IS SOLDERABLE EXPOSED METAL.
2. REFERENCE JEDEC#: MO−220
3. PACKAGE WEIGHT: 162 ± 16 mg
4. ALL DIMENSIONS ARE IN MILLIMETERS

001-53450 *D

Figure 38. 100-Pin Thin Plastic Quad Flatpack (14 × 20 × 1.4 mm) A100RA (51-85050)

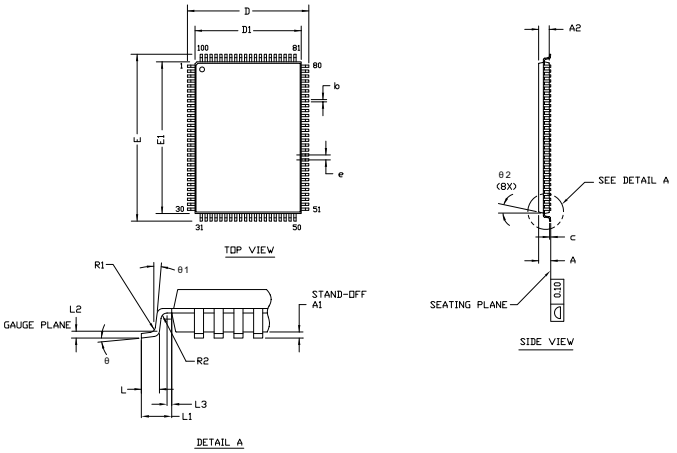

SYMBOL	DIMENSIONS		
	MIN.	NOM.	MAX.
A	—	—	1.60
A1	0.05	—	0.15
A2	1.35	1.40	1.45
D	15.80	16.00	16.20
D1	13.90	14.00	14.10
E	21.80	22.00	22.20
E1	19.90	20.00	20.10
R1	0.08	—	0.20
R2	0.08	—	0.20
θ	0°	—	7°
θ1	0°	—	—
θ2	11°	12°	13°
c	—	—	0.20
b	0.22	0.30	0.38
L	0.45	0.60	0.75
L1	1.00 REF		
L2	0.25 BSC		
L3	0.20	—	—
e	0.65 TYP		

NOTE:
1. ALL DIMENSIONS ARE IN MILLIMETERS.
2. BODY LENGTH DIMENSION DOES NOT INCLUDE MOLD PROTRUSION/END FLASH. MOLD PROTRUSION/END FLASH SHALL NOT EXCEED 0.0098 in (0.25 mm) PER SIDE. BODY LENGTH DIMENSIONS ARE MAX PLASTIC BODY SIZE INCLUDING MOLD MISMATCH.
3. JEDEC SPECIFICATION NO. REF: MS-026.

51-85050 *G

Figure 39. 128-Pin Thin Plastic Quad Flatpack (14 × 20 × 1.4 mm) A128 (51-85101)

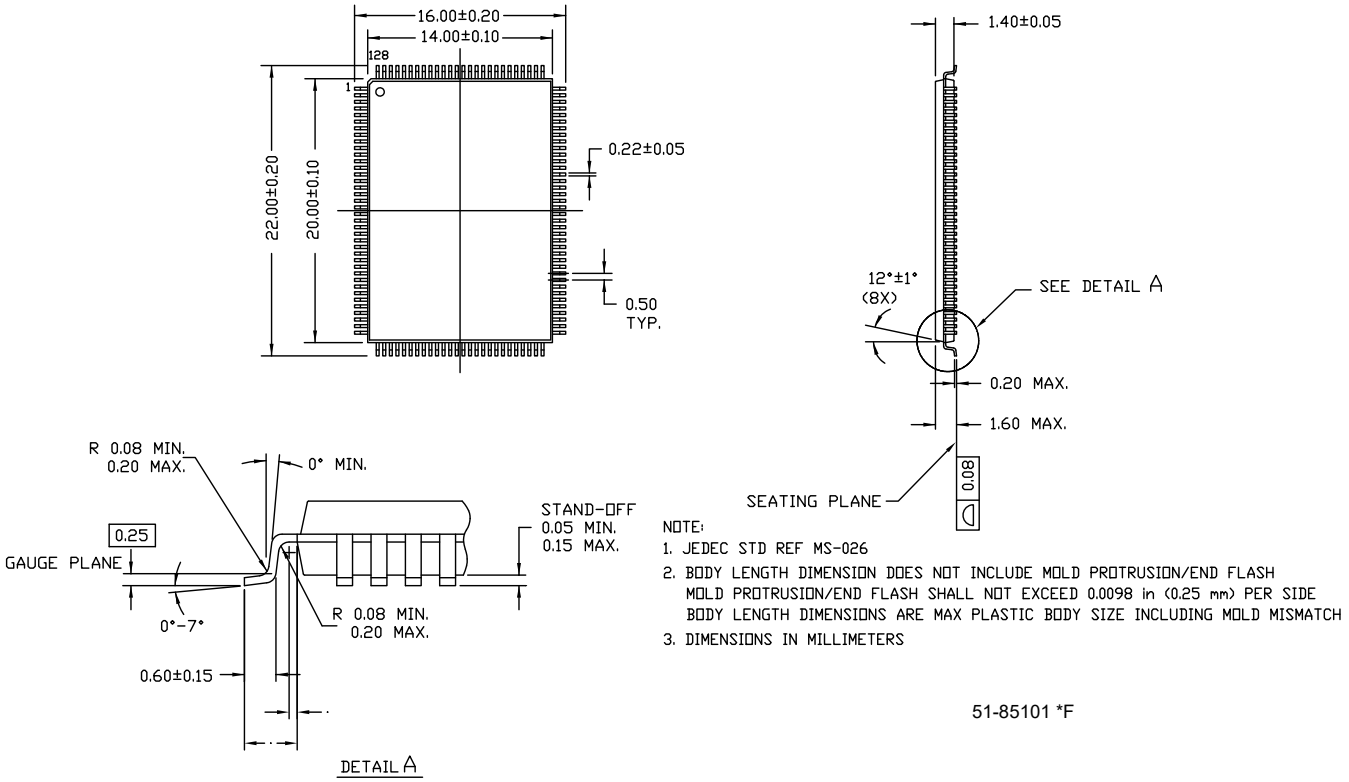

Figure 40. 56-Pin VFBGA (5 × 5 × 1.0 mm) 0.50 Pitch, 0.30 Ball BZ56 (001-03901)

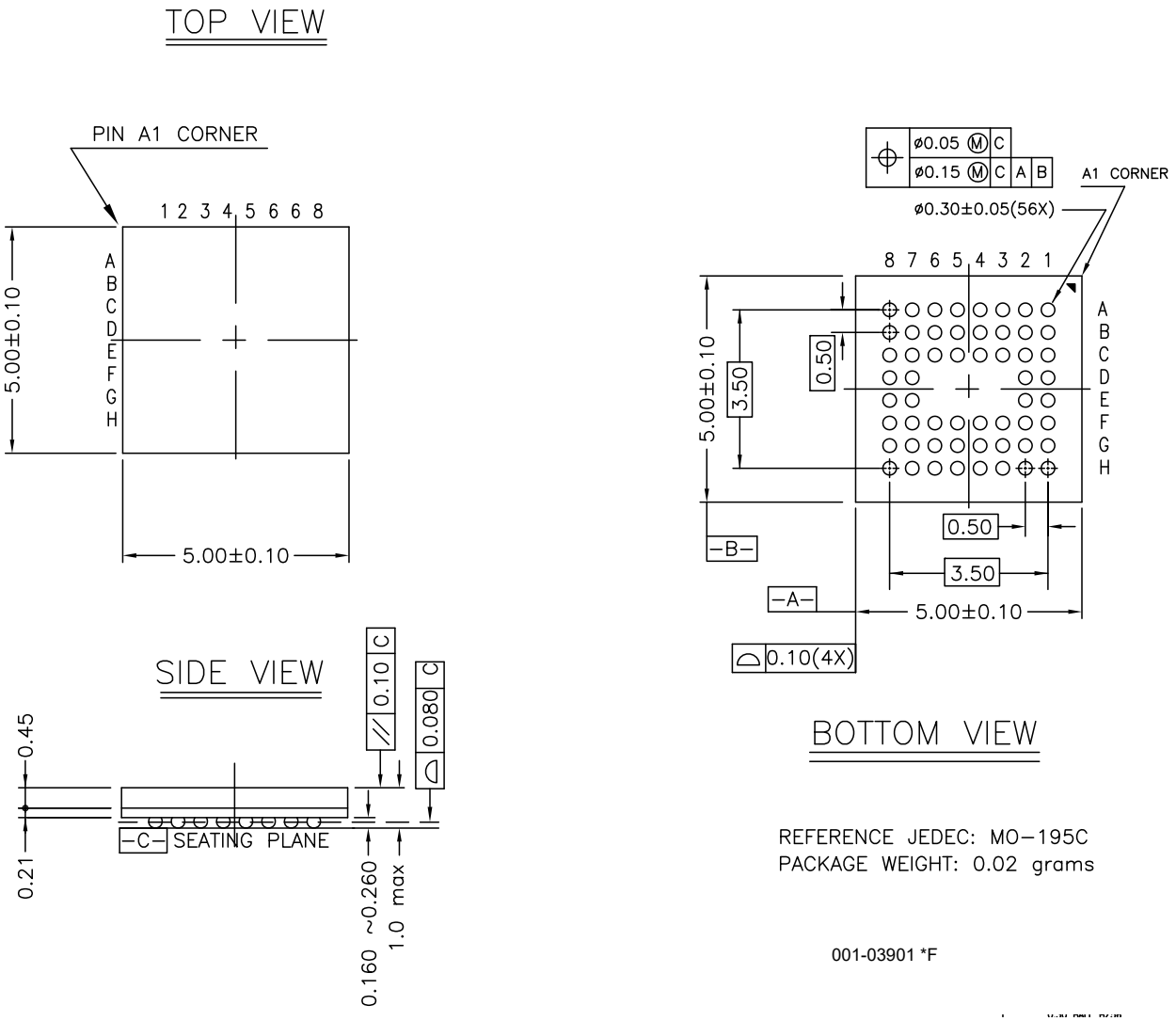

PCB Layout Recommendations

Follow these recommendations to ensure reliable high performance operation:[29]

- Four-layer, impedance-controlled boards are required to maintain signal quality.
- Specify impedance targets (ask your board vendor what they can achieve).
- To control impedance, maintain trace widths and trace spacing.
- Minimize stubs to minimize reflected signals.
- Connections between the USB connector shell and signal ground must be near the USB connector.
- Bypass and flyback caps on VBUS, near connector, are recommended.
- DPLUS and DMINUS trace lengths should be kept to within 2 mm of each other in length, with preferred length of 20 to 30 mm.
- Maintain a solid ground plane under the DPLUS and DMINUS traces. Do not allow the plane to split under these traces.
- Do not place vias on the DPLUS or DMINUS trace routing.
- Isolate the DPLUS and DMINUS traces from all other signal traces by no less than 10 mm.

Note

29. Source for recommendations: *EZ-USB FX2™PCB Design Recommendations*, http://www.cypress.com and *High Speed USB Platform Design Guidelines*, http://www.usb.org/developers/docs/hs_usb_pdg_r1_0.pdf.

Quad Flat Package No Leads (QFN) Package Design Notes

Electrical contact of the part to the PCB is made by soldering the leads on the bottom surface of the package to the PCB. Therefore, special attention is required to the heat transfer area below the package to provide a good thermal bond to the circuit board. Design a copper (Cu) fill in the PCB as a thermal pad under the package. Heat is transferred from the FX2LP through the device's metal paddle on the bottom side of the package. Heat from here is conducted to the PCB at the thermal pad. It is then conducted from the thermal pad to the PCB inner ground plane by a 5 × 5 array of via. A via is a plated-through hole in the PCB with a finished diameter of 13 mil. The QFN's metal die paddle must be soldered to the PCB's thermal pad. Solder mask is placed on the board top side over each via to resist solder flow into the via. The mask on the top side also minimizes outgassing during the solder reflow process.

For further information on this package design, refer to application notes for Surface Mount Assembly of Amkor's MicroLeadFrame (MLF) Packages. You can find this on Amkor's website http://www.amkor.com.

This application note provides detailed information about board mounting guidelines, soldering flow, rework process, etc.

Figure 41 shows a cross-sectional area underneath the package. The cross section is of only one via. The solder paste template should be designed to allow at least 50% solder coverage. The thickness of the solder paste template should be 5 mil. Use the No Clean type 3 solder paste for mounting the part. Nitrogen purge is recommended during reflow.

Figure 42 is a plot of the solder mask pattern and Figure 43 displays an X-Ray image of the assembly (darker areas indicate solder).

Figure 41. Cross-section of the Area Underneath the QFN Package

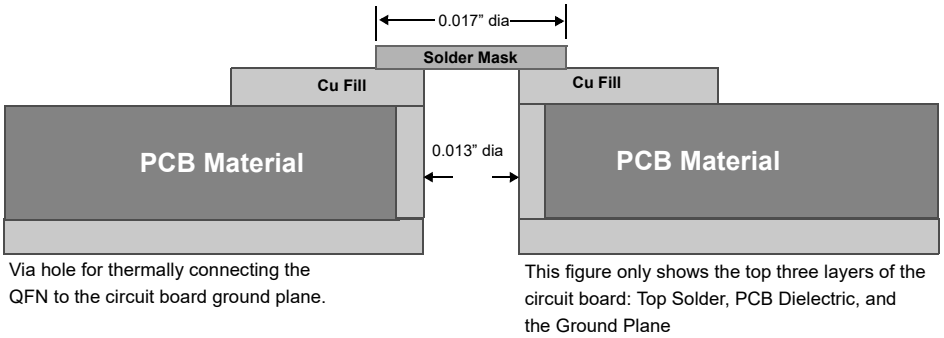

Figure 42. Plot of the Solder Mask (White Area)

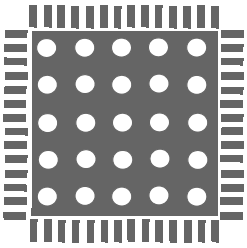

Figure 43. X-ray Image of the Assembly

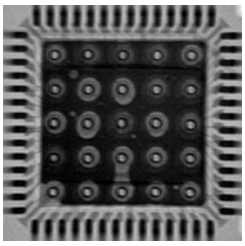

Acronyms

Table 34. Acronyms Used in this Document

Acronym	Description
ASIC	application-specific integrated circuit
ATA	advanced technology attachment
DID	device identifier
DSL	digital service line
DSP	digital signal processor
ECC	error correction code
EEPROM	electrically erasable programmable read only memory
EPP	enhanced parallel port
FIFO	first in first out
GPIF	general programmable interface
GPIO	general purpose input output
I/O	input output
LAN	local area network
MPEG	moving picture experts group
PCMCIA	personal computer memory card international association
PID	product identifier
PLL	phase locked loop
QFN	quad flat no leads
RAM	random access memory
SIE	serial interface engine
SOF	start of frame
SSOP	super small outline package
TQFP	thin quad flat pack
USART	universal serial asynchronous receiver/transmitter
USB	universal serial bus
UTOPIA	universal test and operations physical-layer interface
VFBGA	very fine ball grid array
VID	vendor identifier

Document Conventions

Units of Measure

Table 35. Units of Measure

Symbol	Unit of Measure
kHz	kilohertz
mA	milliamperes
Mbps	megabits per second
MBPs	megabytes per second
MHz	megahertz
uA	microamperes
V	volts

Errata

This section describes the errata for the EZ-USB® FX2LP™ CY7C68013A/14A/15A/16A Rev. B silicon. Details include errata trigger conditions, scope of impact, available workaround, and silicon revision applicability.

Contact your local Cypress Sales Representative if you have questions.

Part Numbers Affected

Part Number	Package Type	Operating Range
CY7C68013A	All	Commercial
CY7C68014A	All	Commercial
CY7C68015A	All	Commercial
CY7C68016A	All	Commercial

CY7C68013A/14A/15A/16A Qualification Status

In production

CY7C68013A/14A/15A/16A Errata Summary

This table defines the errata for available CY7C68013A/14A/15A/16A family devices. An "X" indicates that the errata pertain to the selected device.

Items	CY7C68013A/14A/15A/16A	Silicon Revision	Fix Status
[1.]. Empty Flag Assertion	X	B	No silicon fix planned currently. Use the workaround.

1. Empty Flag Assertion

■ Problem Definition

In Slave FIFO Asynchronous Word Wide mode, if a single word data is transferred from the USB host to EP2, configured as OUT Endpoint (EP) in the first transaction, then the Empty flag behaves incorrectly. This does not happen if the data size is more than one word in the first transaction.

■ Parameters Affected

NA

■ Trigger Condition(S)

In Slave FIFO Asynchronous Word Wide Mode, after firmware boot and initialization, EP2 OUT endpoint empty flag indicates the status as ‘Empty’. When data is received in EP2, the status changes to ‘Not-Empty’. However, if data transferred to EP2 is a single word, then asserting SLRD with FIFOADR pointing to any other endpoint changes ‘Not-Empty’ status to ‘Empty’ for EP2 even though there is a word data (or it is untouched). This is noticed only when the single word is sent as the first transaction and not if it follows a multi-word packet as the first transaction.

■ Scope of Impact

External interface does not see data available in EP2 OUT endpoint and can end up waiting for data to be read.

■ Workaround

One of the following workarounds can be used:

- Send a pulse signal to the SLWR pin, with FIFOADR pins pointing to an endpoint other than EP2, after firmware initialization and before or after transferring the data to EP2 from the host
- Set the length of the first data to EP2 to be more than a word
- Prioritize EP2 read from the Master for multiple OUT EPs and single word write to EP2
- Write to an IN EP, if any, from the Master before reading from other OUT EPs (other than EP2) from the Master.

■ Fix Status

There is no silicon fix planned for this currently; use the workarounds provided.

Document History Page

Document Title: CY7C68013A, CY7C68014A, CY7C68015A, CY7C68016A, EZ-USB® FX2LP™ USB Microcontroller High-Speed USB Peripheral Controller Document Number: 38-08032				
Rev.	**ECN No.**	**Orig. of Change**	**Submission Date**	**Description of Change**
**	124316	VCS	03/17/03	New datasheet
*A	128461	VCS	09/02/03	Added PN CY7C68015A throughout datasheet Modified Figure 1 to add ECC block and fix errors Removed word “compatible” where associated with I^2C Corrected grammar and formatting in various locations Updated Sections 3.2.1, 3.9, 3.11, Table 9, Section 5.0 Added Sections 3.15, 3.18.4, 3.20 Modified Figure 5 for clarity Updated Figure 37 to match current spec revision
*B	130335	KKV	10/09/03	Restored PRELIMINARY to header (had been removed in error from rev. *A)
*C	131673	KKU	02/12/04	Section 8.1 changed “certified” to “compliant” Table 14 added parameter V_{IH_X} and V_{IL_X} Added Sequence diagrams Section 9.16 Updated Ordering information with lead-free parts Updated Registry Summary Section 3.12.4:example changed to column 8 from column 9 Updated Figure 14 memory write timing Diagram Updated section 3.9 (reset) Updated section 3.15 ECC Generation
*D	230713	KKU	See ECN	Changed Lead free Marketing part numbers in Table 33 as per spec change in 28-00054.
*E	242398	TMD	See ECN	Minor Change: datasheet posted to the web,
*F	271169	MON	See ECN	Added USB-IF Test ID number Added USB 2.0 logo Added values for Isusp, Icc, Power Dissipation, Vih_x, Vil_x Changed VCC from ± 10% to ± 5% Changed PKTEND to FLAGS output propagation delay (asynchronous interface) in Table 28 from a max value of 70 ns to 115 ns
*G	316313	MON	See ECN	Removed CY7C68013A-56PVXCT part availability Added parts ideal for battery powered applications: CY7C68014A, CY7C68016A Provided additional timing restrictions and requirement about the use of PKETEND pin to commit a short one byte/word packet subsequent to committing a packet automatically (when in auto mode). Added Min Vcc Ramp Up time (0 to 3.3v)
*H	338901	MON	See ECN	Added information about the AUTOPTR1/AUTOPTR2 address timing with regards to data memory read/write timing diagram. Removed TBD for Min value of Clock to FIFO Data Output Propagation Delay (t_{XFD}) for Slave FIFO Synchronous Read Changed Table 33 to include part CY7C68016A-56LFXC in the part listed for battery powered applications Added register GPCR2 in register summary
*I	371097	MON	See ECN	Added timing for strobing RD#/WR# signals when using PortC strobe feature (Section)
*J	397239	MON	See ECN	Removed XTALINSRC register from register summary. Changed Vcc margins to ±10% Added 56-pin VFBGA Pin Package Diagram Added 56-pin VFBGA definition in pin listing Added RDK part number to the Ordering Information table

Document History Page (continued)

Document Title: CY7C68013A, CY7C68014A, CY7C68015A, CY7C68016A, EZ-USB® FX2LP™ USB Microcontroller High-Speed USB Peripheral Controller Document Number: 38-08032				
Rev.	**ECN No.**	**Orig. of Change**	**Submission Date**	**Description of Change**
*K	420505	MON	See ECN	Remove SLCS from figure in Section . Removed indications that SLRD can be asserted simultaneously with SLCS in Section and Section Added Absolute Maximum Temperature Rating for industrial packages in Section Changed number of packages stated in the description in Section to five. Added Table 13 on Thermal Coefficients for various packages
*L	2064406	CMCC/PYRS	See ECN	Changed TID number Removed T0OUT and T1OUT from CY7C68015A/16A Updated t_{SWR} Min value in Figure 21 Updated 56-lead QFN package diagram
*M	2710327	DPT	05/22/2009	Added 56-Pin QFN (8 X 8 mm) package diagram Updated ordering information for CY7C68013A-56LTXC, CY7C68013A-56LTXI, CY7C68014A-56LTXC, CY7C68015A-56LTXC, and CY7C68016A-56LTXC parts.
*N	2727334	ODC	07/01/09	Removed sentence on E-Pad size change from *F revision in the Document History Page Updated 56-Pin Sawn Package Diagram
*O	2756202	ODC	08/26/2009	Updated Ordering Information table and added note 24.
*P	2785207	ODC	10/12/2009	Added information on Pb-free parts in the Ordering information table.
*Q	2811890	ODC	11/20/2009	Updated Program I/Os for the CY7C68016A-56LTXC and CY7C68016A-56LTXCT parts in "Ordering Information" on page 56.
*R	2896281	ODC	03/19/10	Removed inactive parts from the ordering information table. Updated package diagrams.Updated links in Sales, Solutions and Legal Information.
*S	3035980	ODC	09/22/10	Updated template. Changed PPM requirement for the external crystal from +/- 10 ppm to +/- 100 ppm under Electrical specifications. Added table of contents, ordering code definitions, acronym table, and units of measure.
*T	3161410	AAE	02/03/2011	Replaced 56-Pin QFN 8 × 8 mm Punch Version Package Diagram (Figure 11.2) and 56-Pin QFN 8 × 8 mm Sawn Version Package Diagram (Figure 11.3). Updated Package Diagrams (Figure 11.4, Figure 11.5).
*U	3195232	ODC	03/14/2011	Updated table numbering. Added typical values to Table 18 on page 45 and Table 20 on page 46 based on data obtained from SHAK-63 and SHAK 69. Updated Table 13, "Thermal Characteristics," on page 39 (CDT 89510) Updated package diagram 001-03901 to *D.
*V	3512313	GAYA	02/01/2012	Removed obsolete part CY7C68014A-56BAXC Removed pruned part CY7C68016A-56LFXC Added parts CY7C68013A-56BAXCT and CY7C68013A-56PVXCT Updated Package Diagrams

Document History Page (continued)

Document Title: CY7C68013A, CY7C68014A, CY7C68015A, CY7C68016A, EZ-USB® FX2LP™ USB Microcontroller High-Speed USB Peripheral Controller Document Number: 38-08032				
Rev.	**ECN No.**	**Orig. of Change**	**Submission Date**	**Description of Change**
*W	3998554	GAYA	07/19/2013	Added Errata footnote (Note 3). Updated Functional Overview: Updated Interrupt System: Updated FIFO/GPIF Interrupt (INT4): Added Note 3 and referred the same note in “Endpoint 2 empty flag” in Table 4. Updated Package Diagrams: spec 51-85062 – Changed revision from *E to *F. spec 001-53450 – Changed revision from *B to *C. Added Errata. Updated in new template.
*X	4617527	GAYA	01/15/2015	Updated Figure 13 Added a note to sections Data Memory Read[21] and Data Memory Write[23] sections Updated template to include the More Information section Updated Figure 37, Figure 38, Figure 39 Updated Table 11 with Reset state information for pins Sunset Review
*Y	5317277	ODC	06/28/2016	Updated CY Logo and Sales Disclaimer.
*Z	5713641	GNKK	04/26/2017	Updated the Cypress logo. Updated the 100-pin TQFP package diagram. Updated Sales, Solutions, and Legal Information.
AA	5930426	GAYA	11/09/2017	Updated Table 18 and Table 19.

Sales, Solutions, and Legal Information

Worldwide Sales and Design Support

Cypress maintains a worldwide network of offices, solution centers, manufacturer's representatives, and distributors. To find the office closest to you, visit us at Cypress Locations.

Products

ARM® Cortex® Microcontrollers	cypress.com/arm
Automotive	cypress.com/automotive
Clocks & Buffers	cypress.com/clocks
Interface	cypress.com/interface
Internet of Things	cypress.com/iot
Memory	cypress.com/memory
Microcontrollers	cypress.com/mcu
PSoC	cypress.com/psoc
Power Management ICs	cypress.com/pmic
Touch Sensing	cypress.com/touch
USB Controllers	cypress.com/usb
Wireless Connectivity	cypress.com/wireless

PSoC® Solutions

PSoC 1 | PSoC 3 | PSoC 4 | PSoC 5LP | PSoC 6

Cypress Developer Community

Forums | WICED IOT Forums | Projects | Video | Blogs | Training | Components

Technical Support

cypress.com/support

© Cypress Semiconductor Corporation, 2003-2017. This document is the property of Cypress Semiconductor Corporation and its subsidiaries, including Spansion LLC ("Cypress"). This document, including any software or firmware included or referenced in this document ("Software"), is owned by Cypress under the intellectual property laws and treaties of the United States and other countries worldwide. Cypress reserves all rights under such laws and treaties and does not, except as specifically stated in this paragraph, grant any license under its patents, copyrights, trademarks, or other intellectual property rights. If the Software is not accompanied by a license agreement and you do not otherwise have a written agreement with Cypress governing the use of the Software, then Cypress hereby grants you a personal, non-exclusive, nontransferable license (without the right to sublicense) (1) under its copyright rights in the Software (a) for Software provided in source code form, to modify and reproduce the Software solely for use with Cypress hardware products, only internally within your organization, and (b) to distribute the Software in binary code form externally to end users (either directly or indirectly through resellers and distributors), solely for use on Cypress hardware product units, and (2) under those claims of Cypress's patents that are infringed by the Software (as provided by Cypress, unmodified) to make, use, distribute, and import the Software solely for use with Cypress hardware products. Any other use, reproduction, modification, translation, or compilation of the Software is prohibited.

TO THE EXTENT PERMITTED BY APPLICABLE LAW, CYPRESS MAKES NO WARRANTY OF ANY KIND, EXPRESS OR IMPLIED, WITH REGARD TO THIS DOCUMENT OR ANY SOFTWARE OR ACCOMPANYING HARDWARE, INCLUDING, BUT NOT LIMITED TO, THE IMPLIED WARRANTIES OF MERCHANTABILITY AND FITNESS FOR A PARTICULAR PURPOSE. To the extent permitted by applicable law, Cypress reserves the right to make changes to this document without further notice. Cypress does not assume any liability arising out of the application or use of any product or circuit described in this document. Any information provided in this document, including any sample design information or programming code, is provided only for reference purposes. It is the responsibility of the user of this document to properly design, program, and test the functionality and safety of any application made of this information and any resulting product. Cypress products are not designed, intended, or authorized for use as critical components in systems designed or intended for the operation of weapons, weapons systems, nuclear installations, life-support devices or systems, other medical devices or systems (including resuscitation equipment and surgical implants), pollution control or hazardous substances management, or other uses where the failure of the device or system could cause personal injury, death, or property damage ("Unintended Uses"). A critical component is any component of a device or system whose failure to perform can be reasonably expected to cause the failure of the device or system, or to affect its safety or effectiveness. Cypress is not liable, in whole or in part, and you shall and hereby do release Cypress from any claim, damage, or other liability arising from or related to all Unintended Uses of Cypress products. You shall indemnify and hold Cypress harmless from and against all claims, costs, damages, and other liabilities, including claims for personal injury or death, arising from or related to any Unintended Uses of Cypress products.

Cypress, the Cypress logo, Spansion, the Spansion logo, and combinations thereof, WICED, PSoC, CapSense, EZ-USB, F-RAM, and Traveo are trademarks or registered trademarks of Cypress in the United States and other countries. For a more complete list of Cypress trademarks, visit cypress.com. Other names and brands may be claimed as property of their respective owners.

FX2LP is a trademark and EZ-USB is a registered trademark of Cypress Semiconductor Corporation.

Мы молодая и активно развивающаяся компания в области поставок электронных компонентов. Мы поставляем электронные компоненты отечественного и импортного производства напрямую от производителей и с крупнейших складов мира.

Благодаря сотрудничеству с мировыми поставщиками мы осуществляем комплексные и плановые поставки широчайшего спектра электронных компонентов.

Собственная эффективная логистика и склад в обеспечивает надежную поставку продукции в точно указанные сроки по всей России.

Мы осуществляем техническую поддержку нашим клиентам и предпродажную проверку качества продукции. На все поставляемые продукты мы предоставляем гарантию .

Осуществляем поставки продукции под контролем ВП МО РФ на предприятия военно-промышленного комплекса России , а также работаем в рамках 275 ФЗ с открытием отдельных счетов в уполномоченном банке. Система менеджмента качества компании соответствует требованиям ГОСТ ISO 9001.

Минимальные сроки поставки, гибкие цены, неограниченный ассортимент и индивидуальный подход к клиентам являются основой для выстраивания долгосрочного и эффективного сотрудничества с предприятиями радиоэлектронной промышленности, предприятиями ВПК и научно-исследовательскими институтами России.

С нами вы становитесь еще успешнее!

Наши контакты:

Телефон: +7 812 627 14 35

Электронная почта: sales@st-electron.ru

Адрес: 198099, Санкт-Петербург, Промышленная ул, дом № 19, литера Н, помещение 100-Н Офис 331