MCP3001

2.7V 10-Bit A/D Converter with SPI™ Serial Interface

Features

- 10-bit resolution
- ±1 LSB max DNL
- ±1 LSB max INL
- On-chip sample and hold
- SPI™ serial interface (modes 0,0 and 1,1)
- Single supply operation: 2.7V - 5.5V
- 200 ksps sampling rate at 5V
- 75 ksps sampling rate at 2.7V
- Low power CMOS technology
  - 5 nA typical standby current, 2 µA max
  - 500 µA max active current at 5V
- Industrial temp range: -40°C to +85°C
- 8-pin PDIP, SOIC, MSOP and TSSOP packages

Applications

- Sensor Interface
- Process Control
- Data Acquisition
- Battery Operated Systems

Description

The Microchip Technology Inc. MCP3001 is a successive approximation 10-bit A/D converter (ADC) with on-board sample and hold circuitry. The device provides a single pseudo-differential input. Differential Nonlinearity (DNL) and Integral Nonlinearity (INL) are both specified at ±1 LSB max. Communication with the device is done using a simple serial interface compatible with the SPI protocol. The device is capable of sample rates up to 200 ksps at a clock rate of 2.8 MHz. The MCP3001 operates over a broad voltage range (2.7V - 5.5V). Low current design permits operation with a typical standby current of only 5 nA and a typical active current of 400 µA. The device is offered in 8-pin PDIP, MSOP, TSSOP and 150 mil SOIC packages.

Package Types

PDIP, MSOP, SOIC, TSSOP

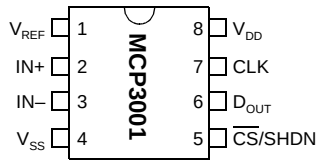

Illustration not to scale

Functional Block Diagram

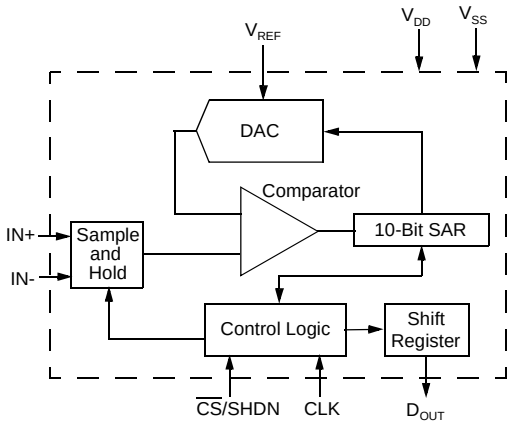

SPI™ is a trademark of Motorola Inc.

© 2007 Microchip Technology Inc.

1.0 ELECTRICAL CHARACTERISTICS

1.1 Maximum Ratings*

V_{DD}.....7.0V

All inputs and outputs w.r.t. V_{SS} ..... -0.6V to V_{DD} +0.6V

Storage temperature .....-65°C to +150°C

Ambient temp. with power applied .....-65°C to +125°C

ESD protection on all pins (HBM).....> 4kV

*Notice: Stresses above those listed under “Maximum ratings” may cause permanent damage to the device. This is a stress rating only and functional operation of the device at those or any other conditions above those indicated in the operational listings of this specification is not implied. Exposure to maximum rating conditions for extended periods may affect device reliability.

PIN FUNCTION TABLE

Name	Function
V_{DD}	+2.7V to 5.5V Power Supply
V_{SS}	Ground
IN+	Positive Analog Input
IN-	Negative Analog Input
CLK	Serial Clock
D_{OUT}	Serial Data Out
$\overline{CS}$/SHDN	$\overline{\text{Chip Select}}$/Shutdown Input
V_{REF}	Reference Voltage Input

ELECTRICAL CHARACTERISTICS

All parameters apply at V_{DD} = 5V, V_{SS} = 0V, V_{REF} = 5V, T_{AMB} = -40°C to +85°C, f_{SAMPLE} = 200 ksps and f_{CLK} = 14*f_{SAMPLE}, unless otherwise noted. Typical values apply for V_{DD} = 5V, T_{AMB} =25°C, unless otherwise noted.

Parameter	Sym	Min	Typ	Max	Units	Conditions
Conversion Rate:						
Conversion Time	t_{CONV}	—	—	10	clock cycles	
Analog Input Sample Time	t_{SAMPLE}		1.5		clock cycles	
Throughput Rate	f_{SAMPLE}	—	—	200 75	ksps ksps	$V_{DD} = V_{REF}$ = 5V $V_{DD} = V_{REF}$ = 2.7V
DC Accuracy:						
Resolution			10		bits	
Integral Nonlinearity	INL	—	±0.5	±1	LSB	
Differential Nonlinearity	DNL	—	±0.25	±1	LSB	No missing codes over temperature
Offset Error		—	—	±1.5	LSB	
Gain Error		—	—	±1	LSB	
Dynamic Performance:						
Total Harmonic Distortion	THD	—	-76	—	dB	V_{IN} = 0.1V to 4.9V@1 kHz
Signal to Noise and Distortion (SINAD)	SINAD	—	61	—	dB	V_{IN} = 0.1V to 4.9V@1 kHz
Spurious Free Dynamic Range	SFDR	—	80	—	dB	V_{IN} = 0.1V to 4.9V@1 kHz
Reference Input:						
Voltage Range	V_{REF}	0.25	—	V_{DD}	V	**Note 2**
Current Drain	I_{REF}	—	90 0.001	150 3	µA µA	 $\overline{CS} = V_{DD}$ = 5V

Note 1: This parameter is guaranteed by characterization and not 100% tested.
2: See graph that relates linearity performance to V_{REF} level.
3: Because the sample cap will eventually lose charge, clock rates below 10 kHz can affect linearity performance, especially at elevated temperatures.

© 2007 Microchip Technology Inc.

All parameters apply at V_{DD} = 5V, V_{SS} = 0V, V_{REF} = 5V, T_{AMB} = -40°C to +85°C, f_{SAMPLE} = 200 ksps and f_{CLK} = 14*f_{SAMPLE}, unless otherwise noted. Typical values apply for V_{DD} = 5V, T_{AMB} =25°C, unless otherwise noted.

Parameter	Sym	Min	Typ	Max	Units	Conditions
Temperature Ranges:						
Specified Temperature Range	T_A	-40	—	+85	°C	
Operating Temperature Range	T_A	-40	—	+85	°C	
Storage Temperature Range	T_A	-65	—	+150	°C	
Thermal Package Resistance:						
Thermal Resistance, 8L-PDIP	θ_{JA}	—	85	—	°C/W	
Thermal Resistance, 8L-SOIC	θ_{JA}	—	163	—	°C/W	
Thermal Resistance, 8L-MSOP	θ_{JA}	—	206	—	°C/W	
Thermal Resistance, 8L-TSSOP	θ_{JA}	—		—	°C/W	
Analog Inputs:						
Input Voltage Range (IN+)	IN+	IN-	—	V_{REF}+IN-	V	
Input Voltage Range (IN-)	IN-	V_{SS}-100	—	V_{SS}+100	mV	
Leakage Current		—	0.001	±1	µA	
Switch Resistance	R_{SS}	—	1K	—	Ω	See Figure 4-1
Sample Capacitor	C_{SAMPLE}	—	20	—	pF	See Figure 4-1
Digital Input/Output:						
Data Coding Format		Straight Binary				
High Level Input Voltage	V_{IH}	0.7 V_{DD}	—	—	V	
Low Level Input Voltage	V_{IL}	—	—	0.3 V_{DD}	V	
High Level Output Voltage	V_{OH}	4.1	—	—	V	I_{OH} = -1 mA, V_{DD} = 4.5V
Low Level Output Voltage	V_{OL}	—	—	0.4	V	I_{OL} = 1 mA, V_{DD} = 4.5V
Input Leakage Current	I_{LI}	-10	—	10	µA	V_{IN} = V_{SS} or V_{DD}
Output Leakage Current	I_{LO}	-10	—	10	µA	V_{OUT} = V_{SS} or V_{DD}
Pin Capacitance (all inputs/outputs)	C_{IN}, C_{OUT}	—	—	10	pF	V_{DD} = 5.0V (**Note 1**) T_{AMB} = 25°C, f = 1 MHz
Timing Parameters:						
Clock Frequency	f_{CLK}	—	—	2.8 1.05	MHz MHz	V_{DD} = 5V (**Note 3**) V_{DD} = 2.7V (**Note 3**)
Clock High Time	t_{HI}	160	—	—	ns	
Clock Low Time	t_{LO}	160	—	—	ns	
$\overline{CS}$ Fall To First Rising CLK Edge	t_{SUCS}	100	—	—	ns	
CLK Fall To Output Data Valid	t_{DO}	—	—	125 200	ns ns	V_{DD} = 5V, See Figure 1-2 V_{DD} = 2.7, See Figure 1-2
CLK Fall To Output Enable	t_{EN}	—	—	125 200	ns ns	V_{DD} = 5V, See Figure 1-2 V_{DD} = 2.7, See Figure 1-2
$\overline{CS}$ Rise To Output Disable	t_{DIS}	—	—	100	ns	See test circuits, Figure 1-2 (**Note 1**)
$\overline{CS}$ Disable Time	t_{CSH}	350	—	—	ns	
D_{OUT} Rise Time	t_R	—	—	100	ns	See test circuits, Figure 1-2 (**Note 1**)
D_{OUT} Fall Time	t_F	—	—	100	ns	See test circuits, Figure 1-2 (**Note 1**)

Note 1: This parameter is guaranteed by characterization and not 100% tested.
2: See graph that relates linearity performance to V_{REF} level.
3: Because the sample cap will eventually lose charge, clock rates below 10 kHz can affect linearity performance, especially at elevated temperatures.

© 2007 Microchip Technology Inc.

All parameters apply at V_{DD} = 5V, V_{SS} = 0V, V_{REF} = 5V, T_{AMB} = -40°C to +85°C, f_{SAMPLE} = 200 ksps and f_{CLK} = 14*f_{SAMPLE}, unless otherwise noted. Typical values apply for V_{DD} = 5V, T_{AMB} =25°C, unless otherwise noted.						
Parameter	**Sym**	**Min**	**Typ**	**Max**	**Units**	**Conditions**
Power Requirements:						
Operating Voltage	V_{DD}	2.7	—	5.5	V	
Operating Current	I_{DD}	—	400 210	500	µA µA	V_{DD} = 5.0V, D_{OUT} unloaded V_{DD} = 2.7V, D_{OUT} unloaded
Standby Current	I_{DDS}	—	0.005	2	µA	$\overline{CS}$ = V_{DD} = 5.0V

Note 1: This parameter is guaranteed by characterization and not 100% tested.
2: See graph that relates linearity performance to V_{REF} level.
3: Because the sample cap will eventually lose charge, clock rates below 10 kHz can affect linearity performance, especially at elevated temperatures.

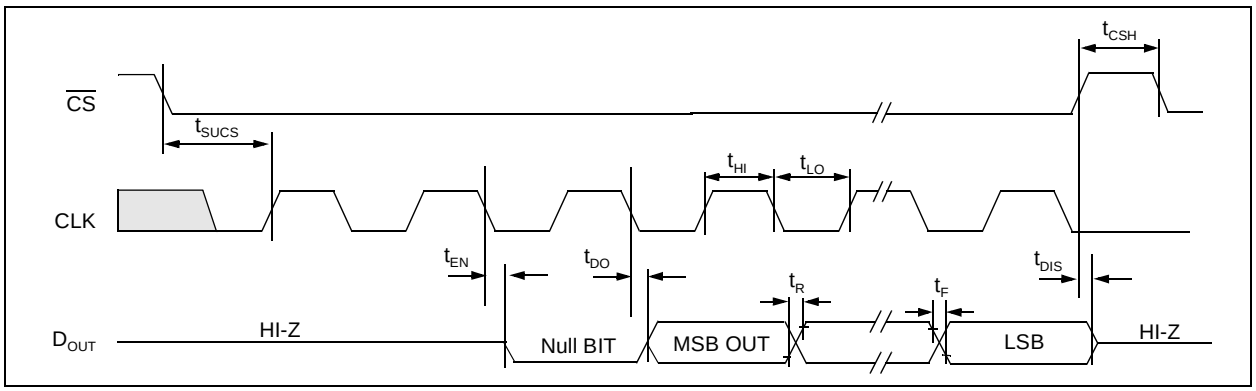

FIGURE 1-1: *Serial Timing.*

© 2007 Microchip Technology Inc.

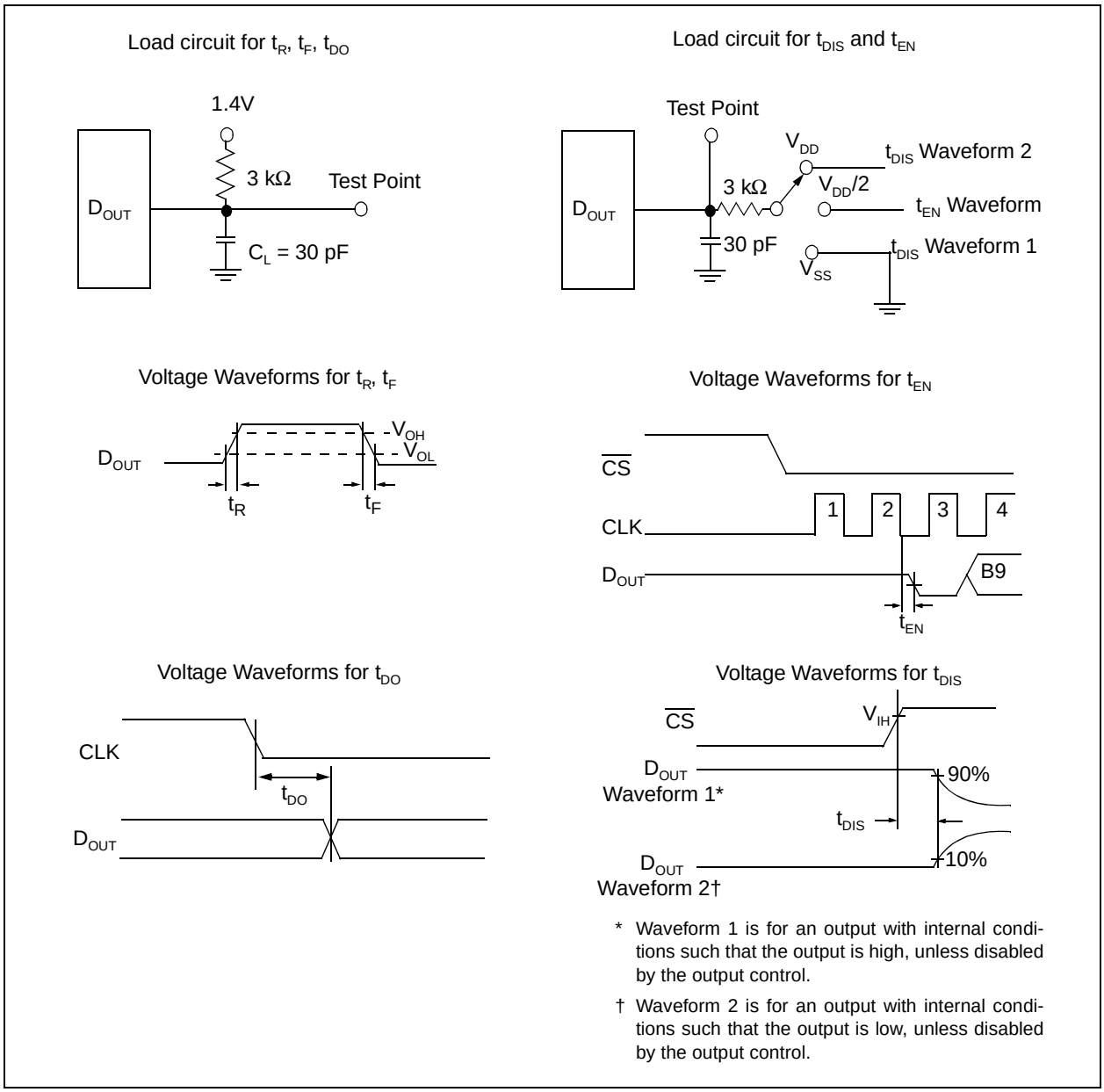

* Waveform 1 is for an output with internal conditions such that the output is high, unless disabled by the output control.

† Waveform 2 is for an output with internal conditions such that the output is low, unless disabled by the output control.

FIGURE 1-2: *Test Circuits.*

2.0 TYPICAL PERFORMANCE CHARACTERISTICS

Note: The graphs and tables provided following this note are a statistical summary based on a limited number of samples and are provided for informational purposes only. The performance characteristics listed herein are not tested or guaranteed. In some graphs or tables, the data presented may be outside the specified operating range (e.g., outside specified power supply range) and therefore outside the warranted range.

Note: Unless otherwise indicated, $V_{DD} = V_{REF} = 5V$, $f_{SAMPLE} = 200$ ksps, $f_{CLK} = 14$*Sample Rate, $T_A = 25°C$

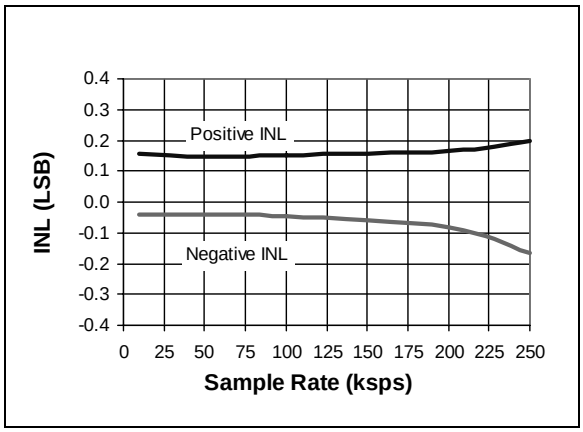

FIGURE 2-1: *Integral Nonlinearity (INL) vs. Sample Rate.*

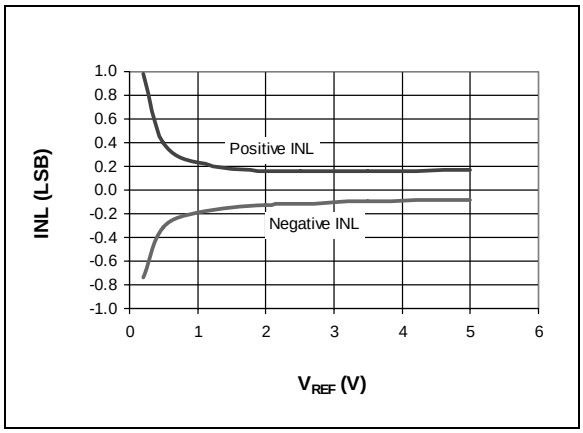

FIGURE 2-2: *Integral Nonlinearity (INL) vs. V_{REF}.*

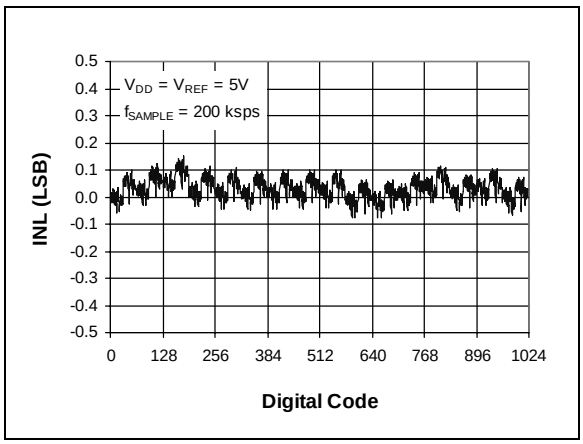

FIGURE 2-3: *Integral Nonlinearity (INL) vs. Code (Representative Part).*

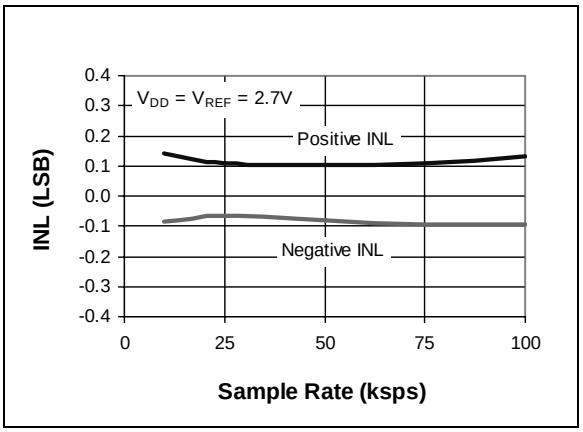

FIGURE 2-4: *Integral Nonlinearity (INL) vs. Sample Rate ($V_{DD} = 2.7V$).*

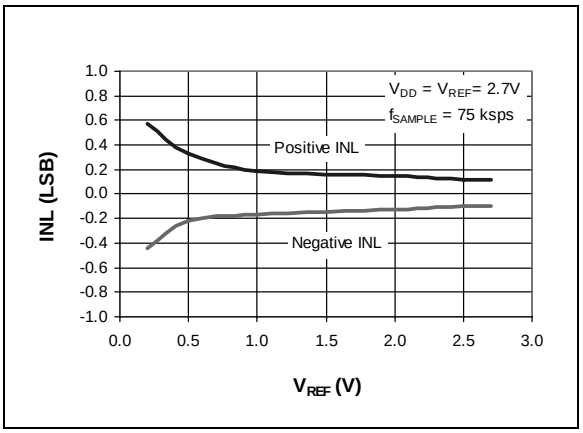

FIGURE 2-5: *Integral Nonlinearity (INL) vs. V_{REF} ($V_{DD} = 2.7V$).*

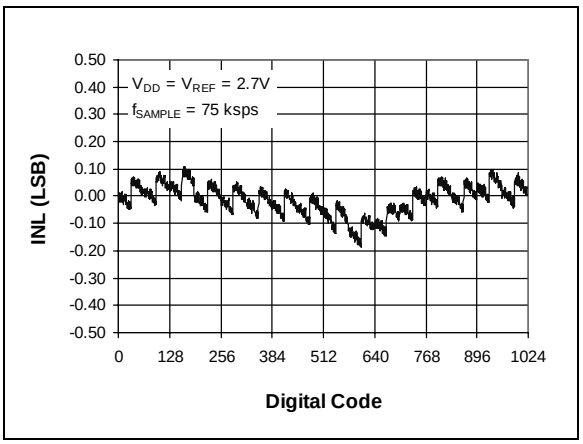

FIGURE 2-6: *Integral Nonlinearity (INL) vs. Code (Representative Part, $V_{DD} = 2.7V$).*

© 2007 Microchip Technology Inc.

Note: Unless otherwise indicated, $V_{DD} = V_{REF} = 5V$, $f_{SAMPLE} = 200$ ksps, $f_{CLK} = 14$*Sample Rate, $T_A = 25°C$

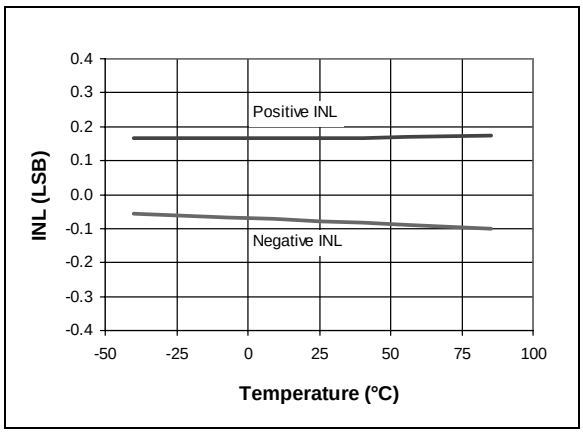

FIGURE 2-7: *Integral Nonlinearity (INL) vs. Temperature.*

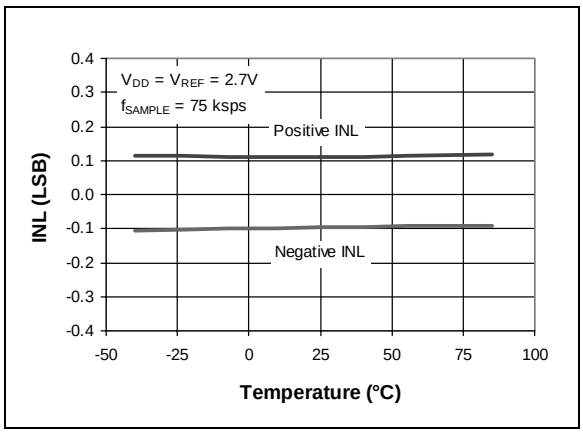

FIGURE 2-10: *Integral Nonlinearity (INL) vs. Temperature (V_{DD} = 2.7V).*

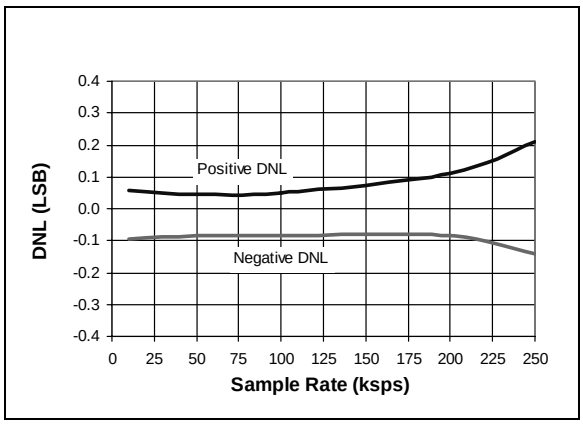

FIGURE 2-8: *Differential Nonlinearity (DNL) vs. Sample Rate.*

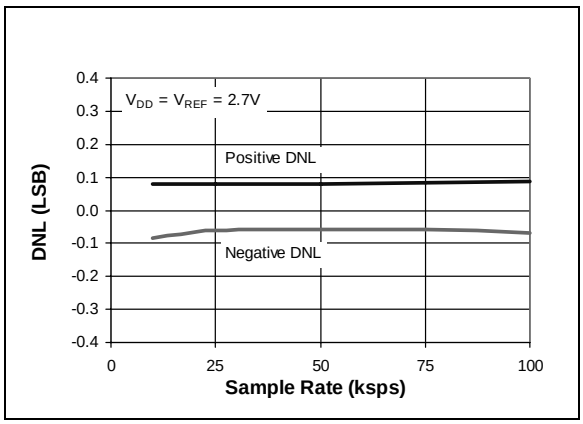

FIGURE 2-11: *Differential Nonlinearity (DNL) vs. Sample Rate (V_{DD} = 2.7V).*

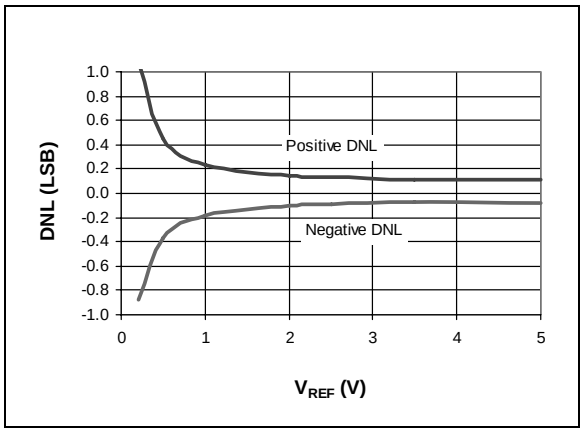

FIGURE 2-9: *Differential Nonlinearity (DNL) vs. V_{REF}.*

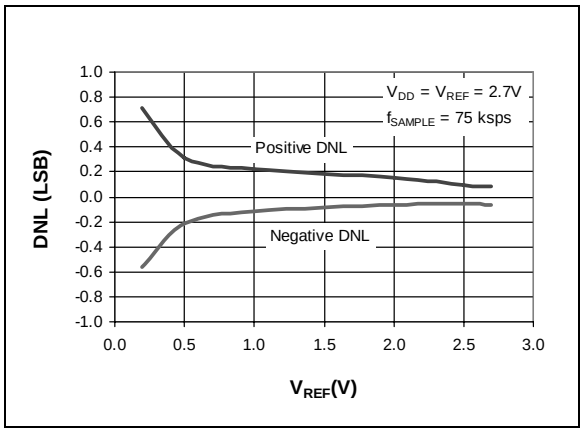

FIGURE 2-12: *Differential Nonlinearity (DNL) vs. V_{REF} (V_{DD} = 2.7V).*

Note: Unless otherwise indicated, $V_{DD} = V_{REF} = 5V$, $f_{SAMPLE} = 200$ ksps, $f_{CLK} = 14$*Sample Rate, $T_A = 25°C$

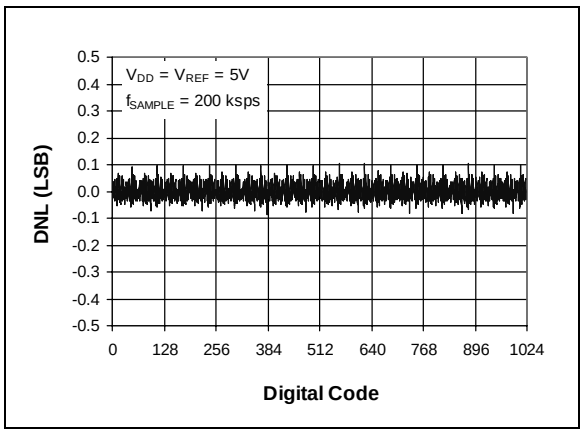

FIGURE 2-13: *Differential Nonlinearity (DNL) vs. Code (Representative Part).*

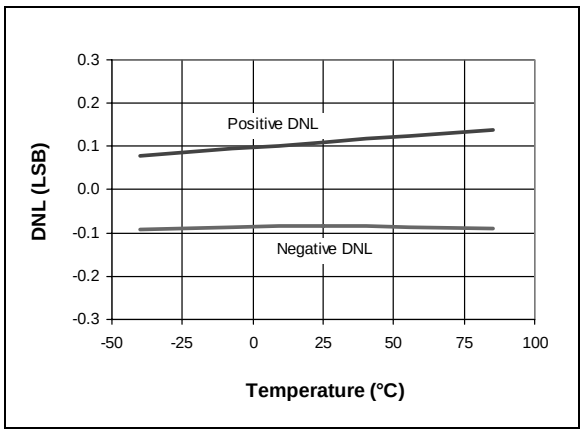

FIGURE 2-14: *Differential Nonlinearity (DNL) vs. Temperature.*

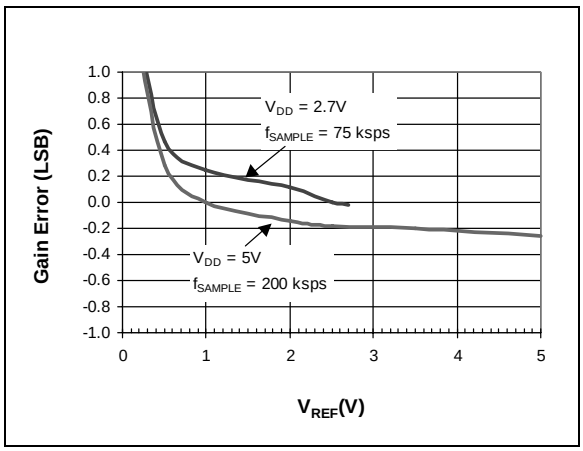

FIGURE 2-15: *Gain Error vs. V_{REF}.*

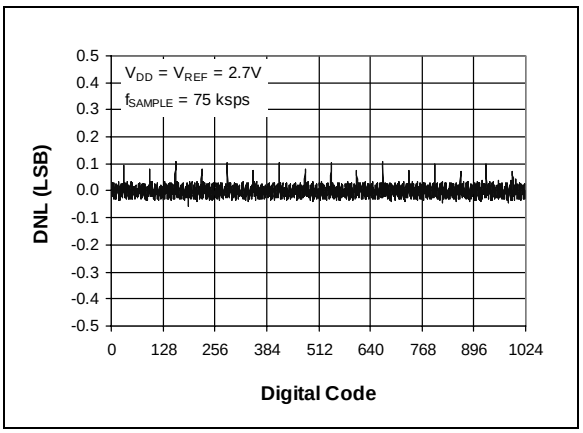

FIGURE 2-16: *Differential Nonlinearity (DNL) vs. Code (Representative Part, $V_{DD} = 2.7V$).*

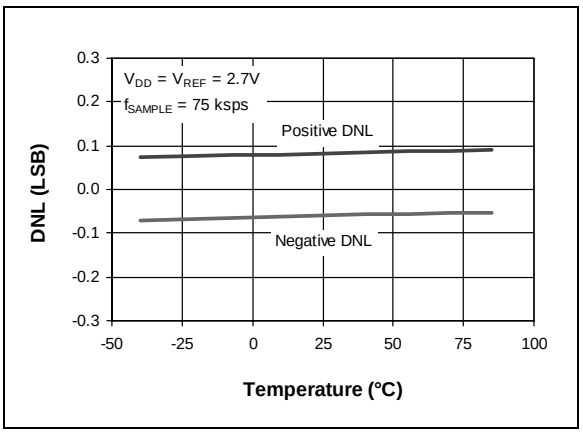

FIGURE 2-17: *Differential Nonlinearity (DNL) vs. Temperature ($V_{DD} = 2.7V$).*

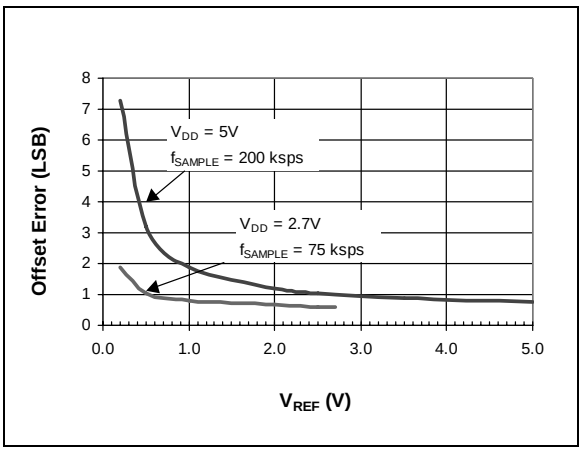

FIGURE 2-18: *Offset Error vs. V_{REF}.*

© 2007 Microchip Technology Inc.

Note: Unless otherwise indicated, $V_{DD} = V_{REF} = 5V$, $f_{SAMPLE} = 200$ ksps, $f_{CLK} = 14$*Sample Rate, $T_A = 25°C$

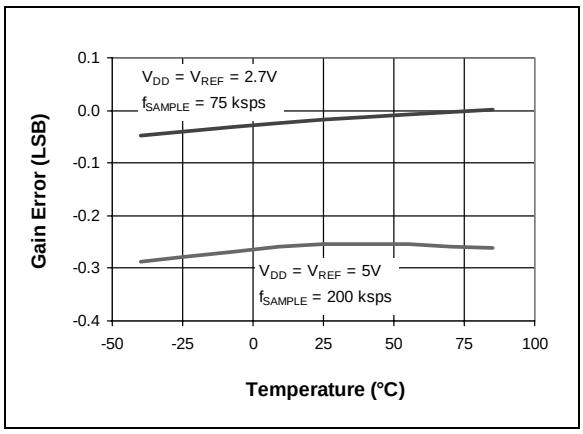

FIGURE 2-19: *Gain Error vs. Temperature.*

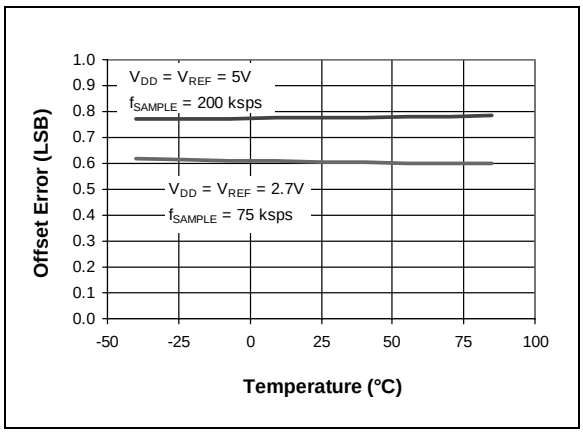

FIGURE 2-22: *Offset Error vs. Temperature.*

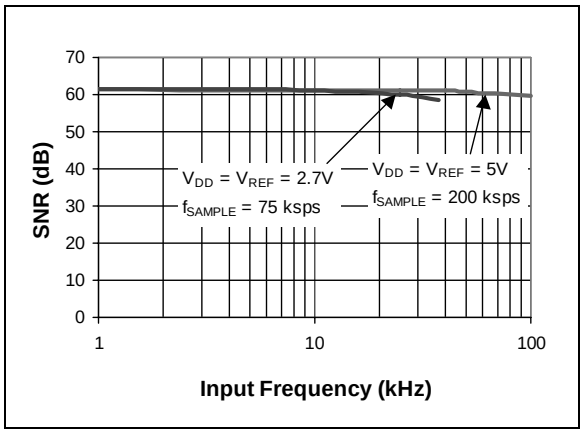

FIGURE 2-20: *Signal to Noise Ratio (SNR) vs. Input Frequency.*

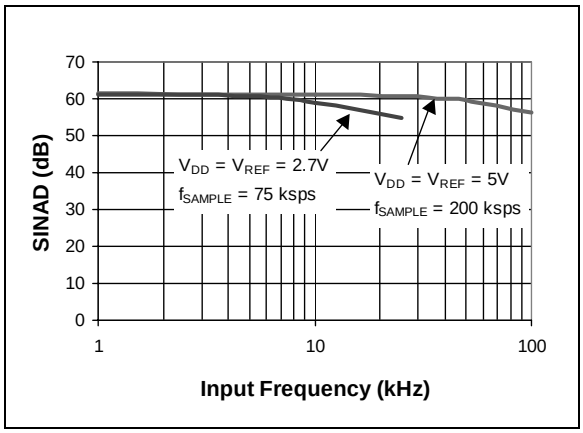

FIGURE 2-23: *Signal to Noise Ratio and Distortion (SINAD) vs. Input Frequency.*

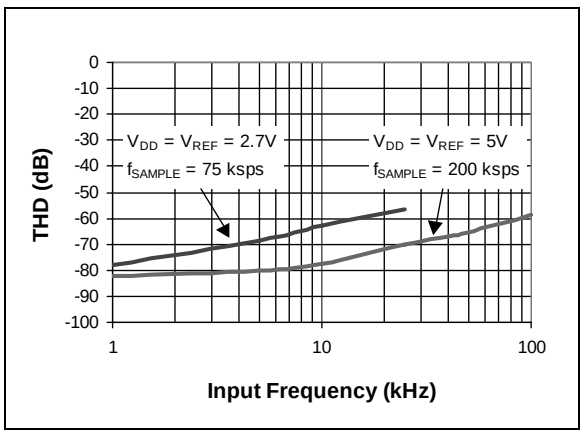

FIGURE 2-21: *Total Harmonic Distortion (THD) vs. Input Frequency.*

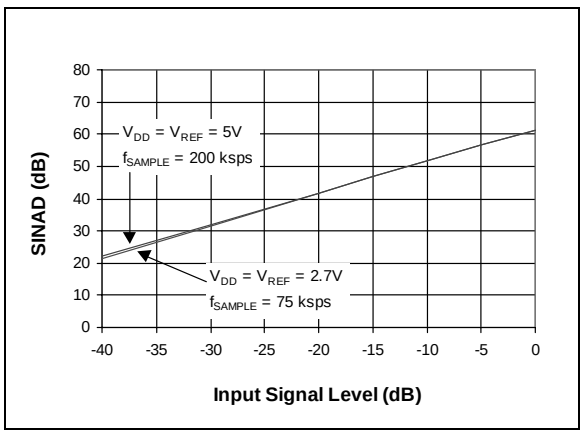

FIGURE 2-24: *Signal to Noise and Distortion (SINAD) vs. Input Signal Level.*

Note: Unless otherwise indicated, $V_{DD} = V_{REF} = 5V$, $f_{SAMPLE} = 200$ ksps, $f_{CLK} = 14$*Sample Rate, $T_A = 25°C$

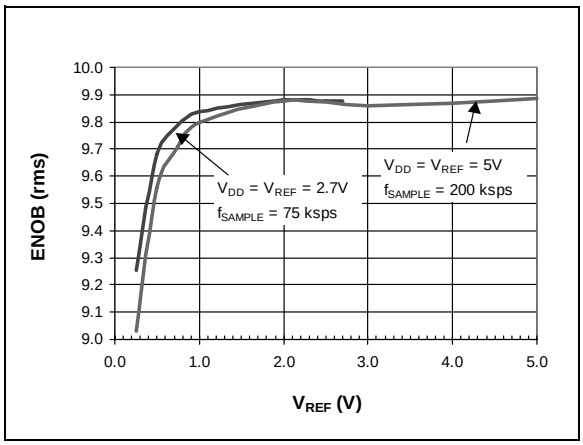

FIGURE 2-25: *Effective Number of Bits (ENOB) vs. V_{REF}.*

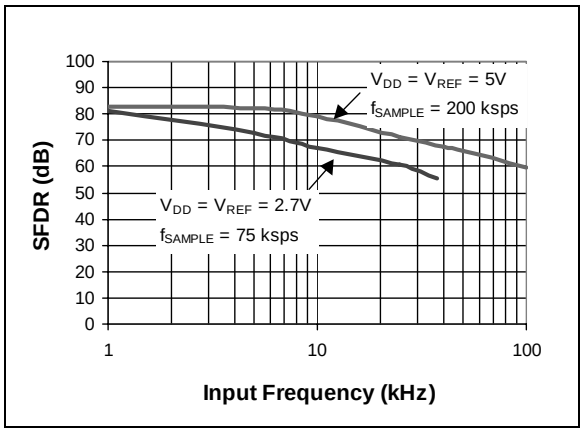

FIGURE 2-26: *Spurious Free Dynamic Range (SFDR) vs. Input Frequency.*

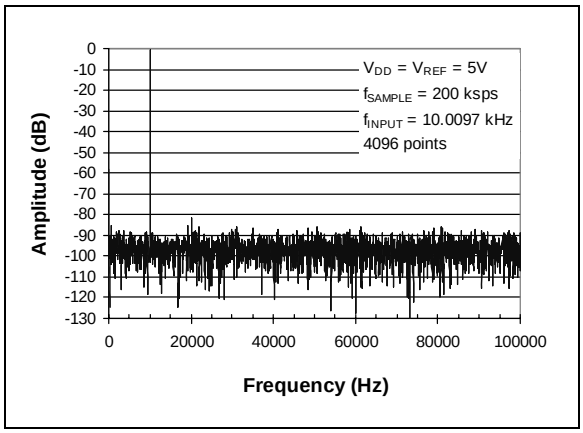

FIGURE 2-27: *Frequency Spectrum of 10 kHz Input (Representative Part).*

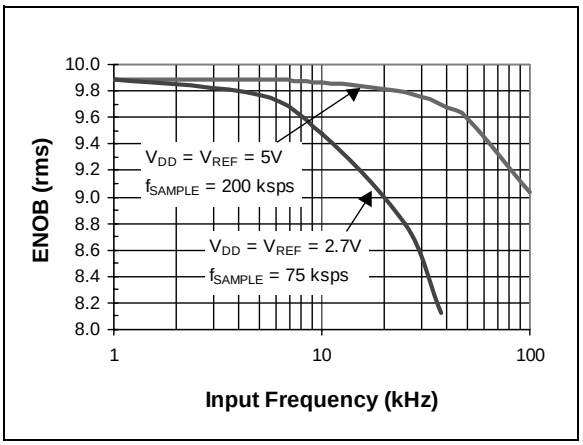

FIGURE 2-28: *Effective Number of Bits (ENOB) vs. Input Frequency.*

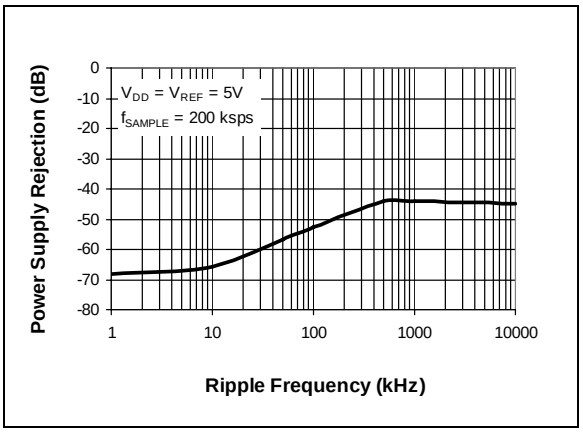

FIGURE 2-29: *Power Supply Rejection (PSR) vs. Ripple Frequency.*

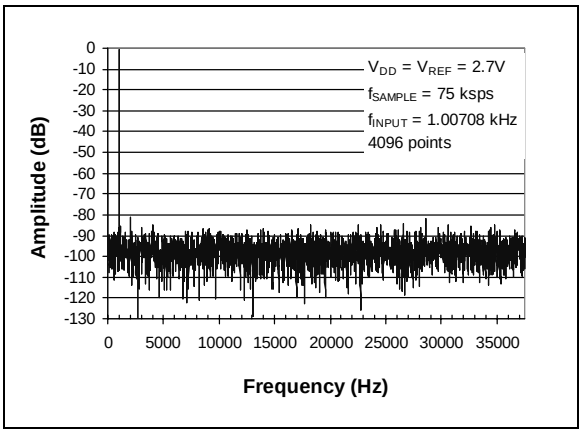

FIGURE 2-30: *Frequency Spectrum of 1 kHz Input (Representative Part, $V_{DD} = 2.7V$).*

© 2007 Microchip Technology Inc.

Note: Unless otherwise indicated, $V_{DD} = V_{REF} = 5V$, $f_{SAMPLE} = 200$ ksps, $f_{CLK} = 14$*Sample Rate, $T_A = 25°C$

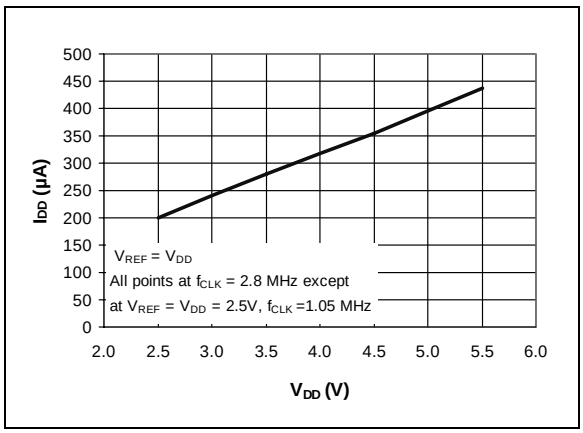

FIGURE 2-31: *I_{DD} vs. V_{DD}.*

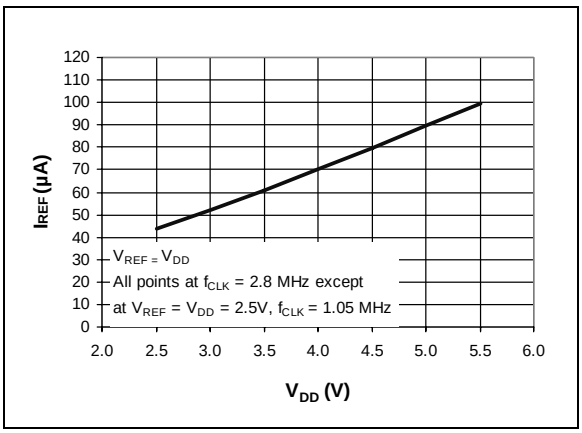

FIGURE 2-34: *I_{REF} vs. V_{DD}.*

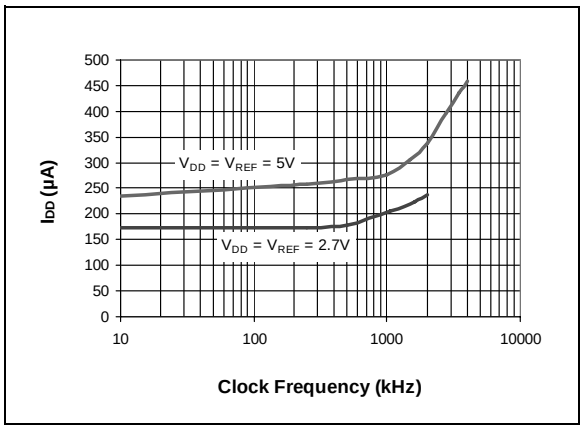

FIGURE 2-32: *I_{DD} vs. Clock Frequency.*

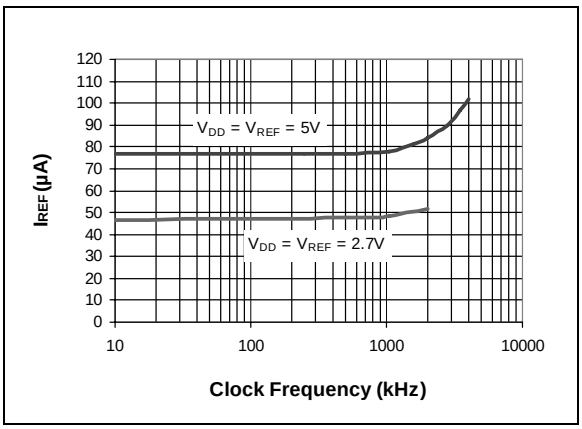

FIGURE 2-35: *I_{REF} vs. Clock Frequency.*

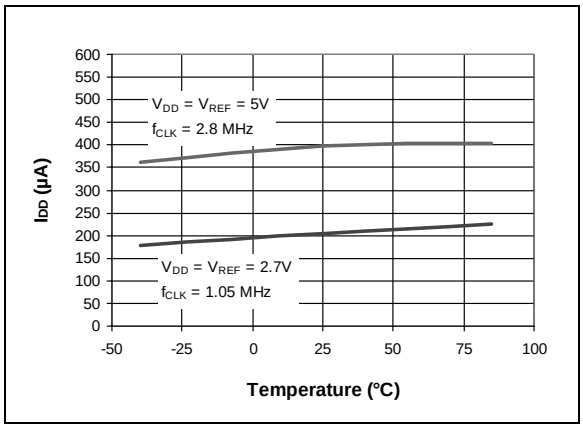

FIGURE 2-33: *I_{DD} vs. Temperature.*

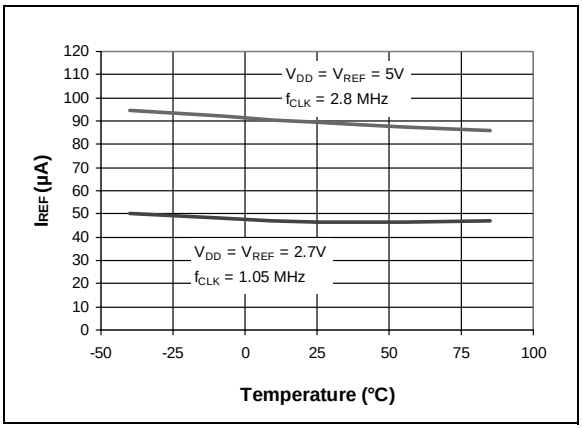

FIGURE 2-36: *I_{REF} vs. Temperature.*

Note: Unless otherwise indicated, $V_{DD} = V_{REF} = 5V$, $f_{SAMPLE} = 200$ ksps, $f_{CLK} = 14*$Sample Rate, $T_A = 25°C$

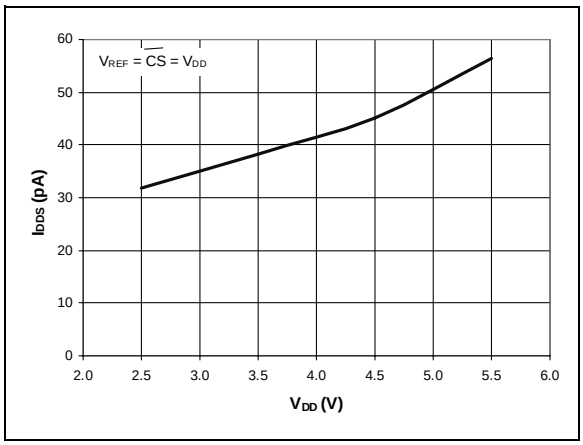

FIGURE 2-37: *I_{DDS} vs. V_{DD}.*

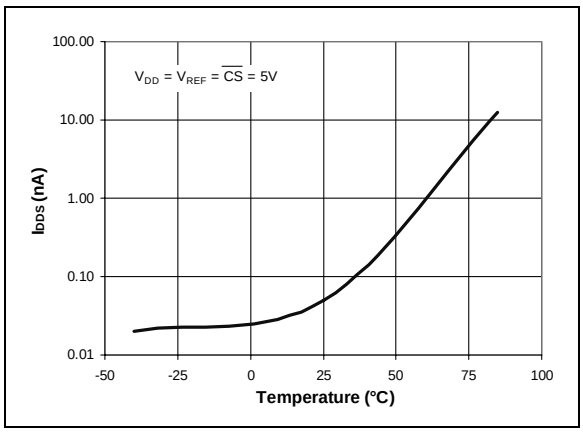

FIGURE 2-38: *I_{DDS} vs. Temperature.*

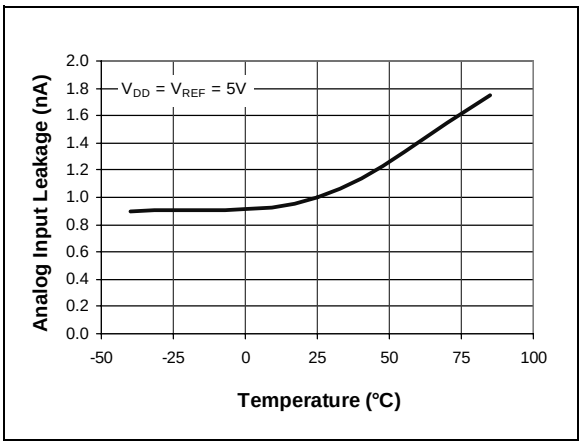

FIGURE 2-39: *Analog Input Leakage Current vs. Temperature.*

© 2007 Microchip Technology Inc.

3.0 PIN DESCRIPTIONS

3.1 IN+

Positive analog input. This input can vary from IN- to V_{REF} + IN-.

3.2 IN-

Negative analog input. This input can vary ±100 mV from V_{SS}.

3.3 $\overline{CS}$/SHDN(Chip Select/Shutdown)

The $\overline{CS}$/SHDN pin is used to initiate communication with the device when pulled low and will end a conversion and put the device in low power standby when pulled high. The $\overline{CS}$/SHDN pin must be pulled high between conversions.

3.4 CLK (Serial Clock)

The SPI clock pin is used to initiate a conversion and to clock out each bit of the conversion as it takes place. See Section 6.2 for constraints on clock speed.

3.5 DOUT (Serial Data output)

The SPI serial data output pin is used to shift out the results of the A/D conversion. Data will always change on the falling edge of each clock as the conversion takes place.

4.0 DEVICE OPERATION

The MCP3001 A/D converter employs a conventional SAR architecture. With this architecture, a sample is acquired on an internal sample/hold capacitor for 1.5 clock cycles starting on the first rising edge of the serial clock after $\overline{CS}$ has been pulled low. Following this sample time, the input switch of the converter opens and the device uses the collected charge on the internal sample and hold capacitor to produce a serial 10-bit digital output code. Conversion rates of 200 ksps are possible on the MCP3001. See Section 6.2 for information on minimum clock rates. Communication with the device is done using a 3-wire SPI-compatible interface.

4.1 Analog Inputs

The MCP3001 provides a single pseudo-differential input. The IN+ input can range from IN- to (V_{REF} +IN-). The IN- input is limited to ±100 mV from the V_{SS} rail. The IN- input can be used to cancel small signal common-mode noise which is present on both the IN+ and IN- inputs.

For the A/D Converter to meet specification, the charge holding capacitor, C_{SAMPLE} must be given enough time to acquire a 10-bit accurate voltage level during the 1.5 clock cycle sampling period. The analog input model is shown in Figure 4-1.

In this diagram, it is shown that the source impedance (R_S) adds to the internal sampling switch, (R_{SS}) impedance, directly affecting the time that is required to charge the capacitor, C_{SAMPLE}. Consequently, a larger source impedance increases the offset, gain, and integral linearity errors of the conversion.

Ideally, the impedance of the signal source should be near zero. This is achievable with an operational amplifier such as the MCP601, which has a closed loop output impedance of tens of ohms. The adverse affects of higher source impedances are shown in Figure 4-2.

If the voltage level of IN+ is equal to or less than IN-, the resultant code will be 000h. If the voltage at IN+ is equal to or greater than {[V_{REF} + (IN-)] - 1 LSB}, then the output code will be 3FFh. If the voltage level at IN- is more than 1 LSB below V_{SS}, then the voltage level at the IN+ input will have to go below V_{SS} to see the 000h output code. Conversely, if IN- is more than 1 LSB above Vss, then the 3FFh code will not be seen unless the IN+ input level goes above V_{REF} level.

4.2 Reference Input

The reference input (V_{REF}) determines the analog input voltage range and the LSB size, as shown below.

$$LSB\ Size = \frac{V_{REF}}{1024}$$

As the reference input is reduced, the LSB size is reduced accordingly. The theoretical digital output code produced by the A/D Converter is a function of the analog input signal and the reference input as shown below.

$$Digital\ Output\ Code = \frac{1024 * V_{IN}}{V_{REF}}$$

where:

V_{IN} = analog input voltage = V(IN+) - V(IN-)

V_{REF} = reference voltage

When using an external voltage reference device, the system designer should always refer to the manufacturer's recommendations for circuit layout. Any instability in the operation of the reference device will have a direct effect on the operation of the ADC.

© 2007 Microchip Technology Inc.

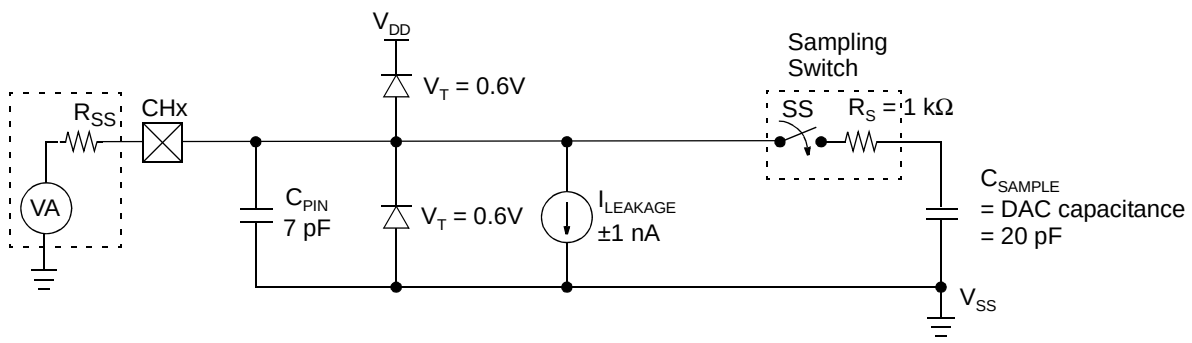

Legend

VA	=	signal source
R_{SS}	=	source impedance
CHx	=	input channel pad
C_{PIN}	=	input pin capacitance
V_T	=	threshold voltage
$I_{LEAKAGE}$	=	leakage current at the pin due to various junctions
SS	=	sampling switch
R_S	=	sampling switch resistor
C_{SAMPLE}	=	sample/hold capacitance

FIGURE 4-1: *Analog Input Model.*

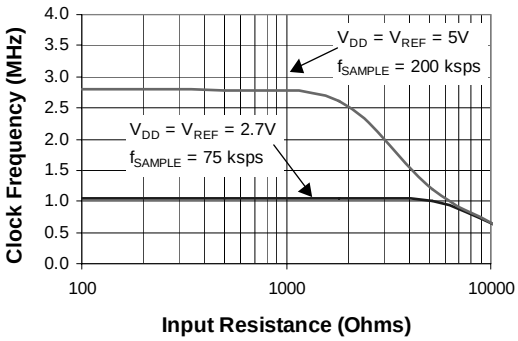

FIGURE 4-2: *Maximum Clock Frequency vs. Input Resistance (R_S) to maintain less than a 0.1LSB deviation in INL from nominal conditions.*

© 2007 Microchip Technology Inc.

5.0 SERIAL COMMUNICATIONS

Communication with the device is done using a standard SPI compatible serial interface. Initiating communication with the MCP3001 begins with the $\overline{CS}$ going low. If the device was powered up with the $\overline{CS}$ pin low, it must be brought high and back low to initiate communication. The device will begin to sample the analog input on the first rising edge after $\overline{CS}$ goes low. The sample period will end in the falling edge of the second clock, at which time the device will output a low null bit. The next 10 clocks will output the result of the conversion with MSB first, as shown in Figure 5-1. Data is always output from the device on the falling edge of the clock. If all 10 data bits have been transmitted and the device continues to receive clocks while the $\overline{CS}$ is held low, the device will output the conversion result LSB first, as shown in Figure 5-2. If more clocks are provided to the device while $\overline{CS}$ is still low (after the LSB first data has been transmitted), the device will clock out zeros indefinitely.

If it is desired, the $\overline{CS}$ can be raised to end the conversion period at any time during the transmission. Faster conversion rates can be obtained by using this technique if not all the bits are captured before starting a new cycle. Some system designers use this method by capturing only the highest order 8 bits and 'throwing away' the lower 2 bits.

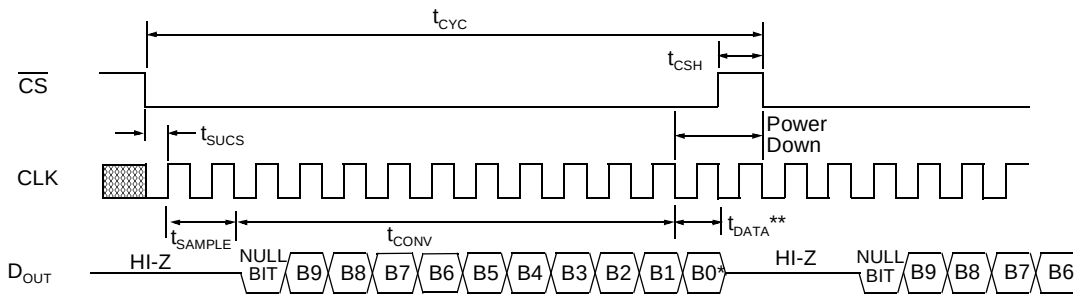

* After completing the data transfer, if further clocks are applied with $\overline{CS}$ low, the ADC will output LSB first data, followed by zeros indefinitely. See Figure below.

** t_{DATA}: during this time, the bias current and the comparator powers down and the reference input becomes a high impedance node.

FIGURE 5-1: *Communication with MCP3001 (MSB first Format).*

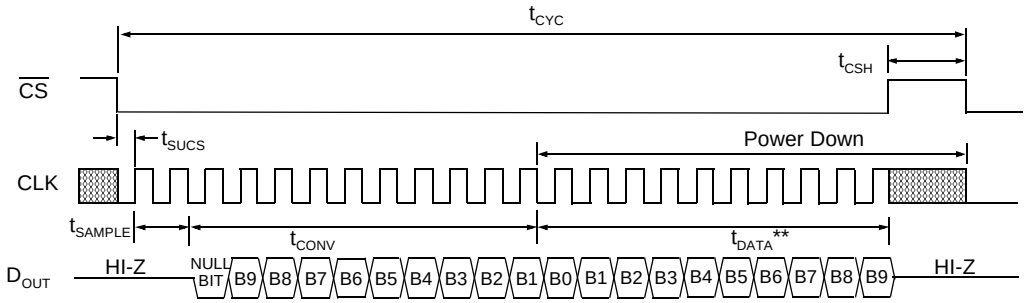

* After completing the data transfer, if further clocks are applied with $\overline{CS}$ low, the ADC will output zeros indefinitely.

** t_{DATA}: during this time, the bias current and the comparator powers down and the reference input becomes a high impedance node leaving the CLK running to clock out the LSB-first data or zeros.

FIGURE 5-2: *Communication with MCP3001 (LSB first Format).*

6.0 APPLICATIONS INFORMATION

6.1 Using the MCP3001 with Microcontroller SPI Ports

With most microcontroller SPI ports, it is required to clock out eight bits at a time. If this is the case, it will be necessary to provide more clocks than are required for the MCP3001. As an example, Figure 6-1 and Figure 6-2 show how the MCP3001 can be interfaced to a microcontroller with a standard SPI port. Since the MCP3001 always clocks data out on the falling edge of clock, the MCU SPI port must be configured to match this operation. SPI Mode 0,0 (clock idles low) and SPI Mode 1,1 (clock idles high) are both compatible with the MCP3001. Figure 6-1 depicts the operation shown in SPI Mode 0,0, which requires that the CLK from the microcontroller idles in the 'low' state. As shown in the diagram, the MSB is clocked out of the ADC on the falling edge of the third clock pulse. After the first eight clocks have been sent to the device, the microcontroller's receive buffer will contain two unknown bits (the output is at high impedance for the first two clocks), the null bit and the highest order five bits of the conversion. After the second eight clocks have been sent to the device, the MCU receive register will contain the lowest order five bits and the B1-B4 bits repeated as the ADC has begun to shift out LSB first data with the extra clocks. Typical procedure would then call for the lower order byte of data to be shifted right by three bits to remove the extra B1-B4 bits. The B9-B5 bits are then rotated 3 bits to the right with B7-B5 rotating from the high order byte to the lower order byte. Easier manipulation of the converted data can be obtained by using this method.

Figure 6-2 shows SPI Mode 1,1 communication which requires that the clock idles in the high state. As with mode 0,0, the ADC outputs data on the falling edge of the clock and the MCU latches data from the ADC in on the rising edge of the clock.

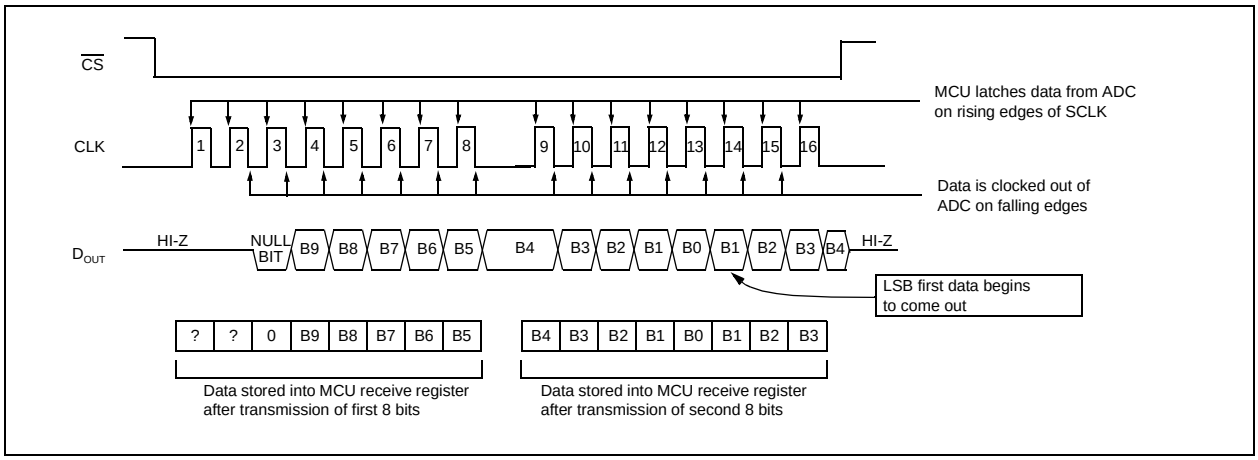

FIGURE 6-1: *SPI Communication with the MCP3001 using 8-bit segments (Mode 0,0: SCLK idles low).*

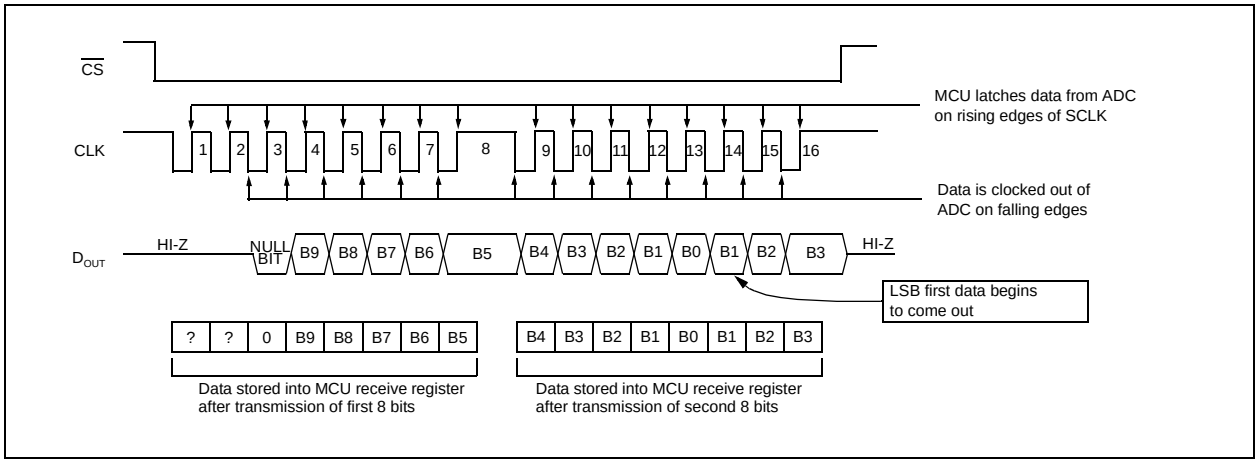

FIGURE 6-2: *SPI Communication with the MCP3001 using 8-bit segments (Mode 1,1: SCLK idles high).*

© 2007 Microchip Technology Inc.

6.2 Maintaining Minimum Clock Speed

When the MCP3001 initiates the sample period, charge is stored on the sample capacitor. When the sample period is complete, the device converts one bit for each clock that is received. It is important for the user to note that a slow clock rate will allow charge to bleed off the sample cap while the conversion is taking place. At 85°C (worst case condition), the part will maintain proper charge on the sample cap for 700 µs at V_{DD} = 2.7V and 1.5 ms at V_{DD} = 5V. This means that at V_{DD} = 2.7V, the time it takes to transmit the first 14 clocks must not exceed 700 µs. Failure to meet this criterion may induce linearity errors into the conversion outside the rated specifications.

6.3 Buffering/Filtering the Analog Inputs

If the signal source for the ADC is not a low impedance source, it will have to be buffered or inaccurate conversion results may occur. See Figure 4-2. It is also recommended that a filter be used to eliminate any signals that may be aliased back into the conversion results. This is illustrated in Figure 6-3 where an op amp is used to drive, filter and gain the analog input of the MCP3001. This amplifier provides a low impedance source for the converter input and a low pass filter, which eliminates unwanted high frequency noise.

Low pass (anti-aliasing) filters can be designed using Microchip's interactive FilterLab™ software. FilterLab will calculate capacitor and resistor values, as well as determine the number of poles that are required for the application. For more information on filtering signals, see the application note AN699 *"Anti-Aliasing Analog Filters for Data Acquisition Systems."*

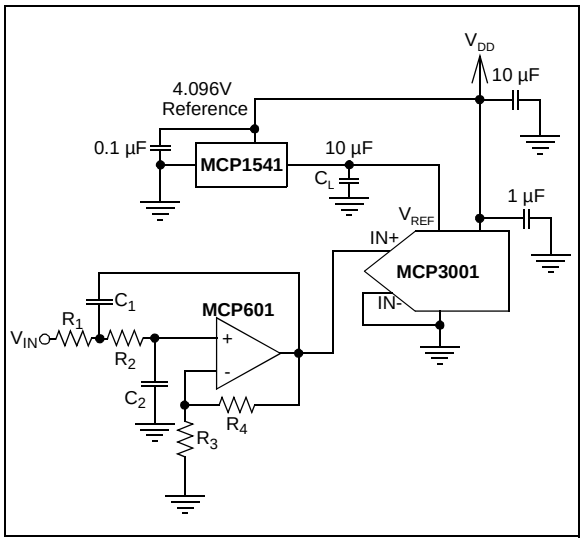

FIGURE 6-3: *The MCP601 operational amplifier is used to implement a 2nd order anti-aliasing filter for the signal being converted by the MCP3001.*

6.4 Layout Considerations

When laying out a printed circuit board for use with analog components, care should be taken to reduce noise wherever possible. A bypass capacitor should always be used with this device and should be placed as close as possible to the device pin. A bypass capacitor value of 1 µF is recommended.

Digital and analog traces should be separated as much as possible on the board and no traces should run underneath the device or the bypass capacitor. Extra precautions should be taken to keep traces with high frequency signals (such as clock lines) as far as possible from analog traces.

Use of an analog ground plane is recommended in order to keep the ground potential the same for all devices on the board. Providing V_{DD} connections to devices in a "star" configuration can also reduce noise by eliminating current return paths and associated errors. See Figure 6-4. For more information on layout tips when using ADC, refer to AN-688 *"Layout Tips for 12-Bit A/D Converter Applications"*.

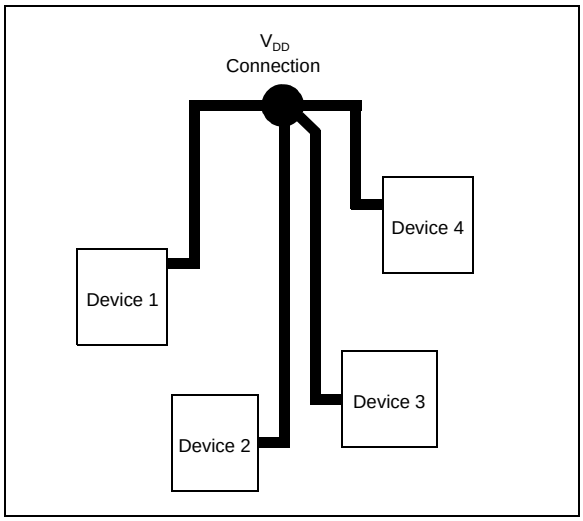

FIGURE 6-4: *V_{DD} traces arranged in a 'Star' configuration in order to reduce errors caused by current return paths.*

7.0 PACKAGING INFORMATION

7.1 Package Marking Information

8-Lead PDIP (300 mil)

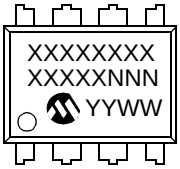

Example:

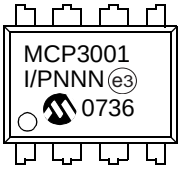

8-Lead SOIC (150 mil)

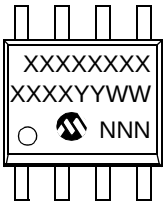

Example:

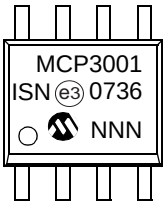

8-Lead MSOP

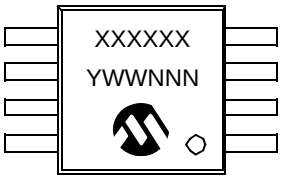

Example:

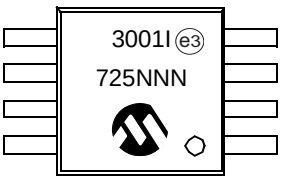

8-Lead TSSOP

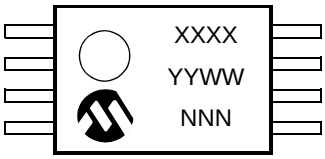

Example:

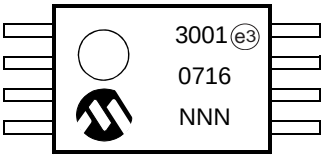

Legend:	XX...X	Customer-specific information
	Y	Year code (last digit of calendar year)
	YY	Year code (last 2 digits of calendar year)
	WW	Week code (week of January 1 is week ‘01’)
	NNN	Alphanumeric traceability code
	e3	Pb-free JEDEC designator for Matte Tin (Sn)
	*	This package is Pb-free. The Pb-free JEDEC designator (e3) can be found on the outer packaging for this package.

Note: In the event the full Microchip part number cannot be marked on one line, it will be carried over to the next line, thus limiting the number of available characters for customer-specific information.

© 2007 Microchip Technology Inc.

8-Lead Plastic Dual In-Line (P) – 300 mil Body [PDIP]

Note: For the most current package drawings, please see the Microchip Packaging Specification located at http://www.microchip.com/packaging

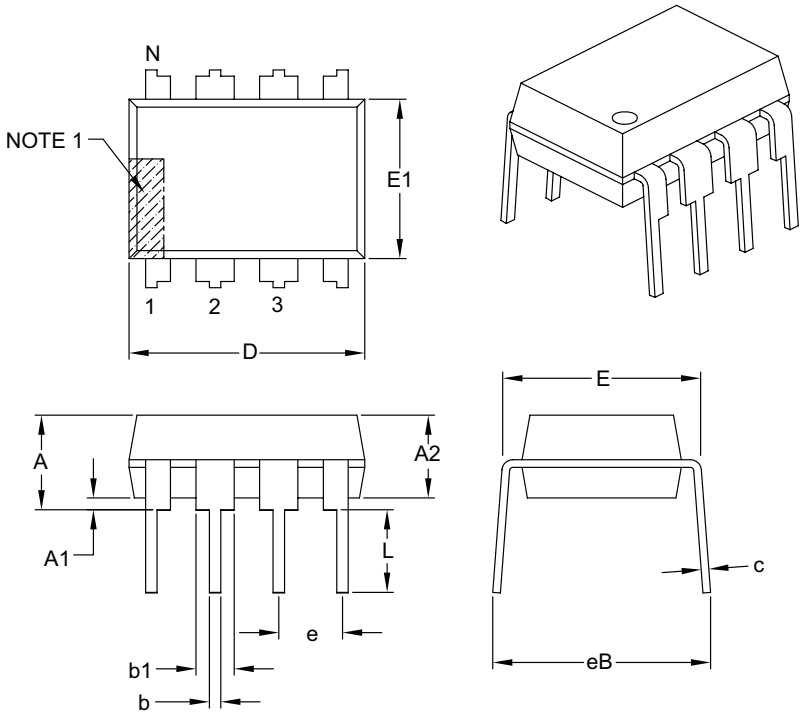

Units		INCHES		
Dimension Limits		MIN	NOM	MAX
Number of Pins	N	8		
Pitch	e	.100 BSC		
Top to Seating Plane	A	–	–	.210
Molded Package Thickness	A2	.115	.130	.195
Base to Seating Plane	A1	.015	–	–
Shoulder to Shoulder Width	E	.290	.310	.325
Molded Package Width	E1	.240	.250	.280
Overall Length	D	.348	.365	.400
Tip to Seating Plane	L	.115	.130	.150
Lead Thickness	c	.008	.010	.015
Upper Lead Width	b1	.040	.060	.070
Lower Lead Width	b	.014	.018	.022
Overall Row Spacing §	eB	–	–	.430

Notes:

1. Pin 1 visual index feature may vary, but must be located with the hatched area.
2. § Significant Characteristic.
3. Dimensions D and E1 do not include mold flash or protrusions. Mold flash or protrusions shall not exceed .010" per side.
4. Dimensioning and tolerancing per ASME Y14.5M.
   BSC: Basic Dimension. Theoretically exact value shown without tolerances.

Microchip Technology Drawing C04-018B

8-Lead Plastic Small Outline (SN) – Narrow, 3.90 mm Body [SOIC]

Note: For the most current package drawings, please see the Microchip Packaging Specification located at http://www.microchip.com/packaging

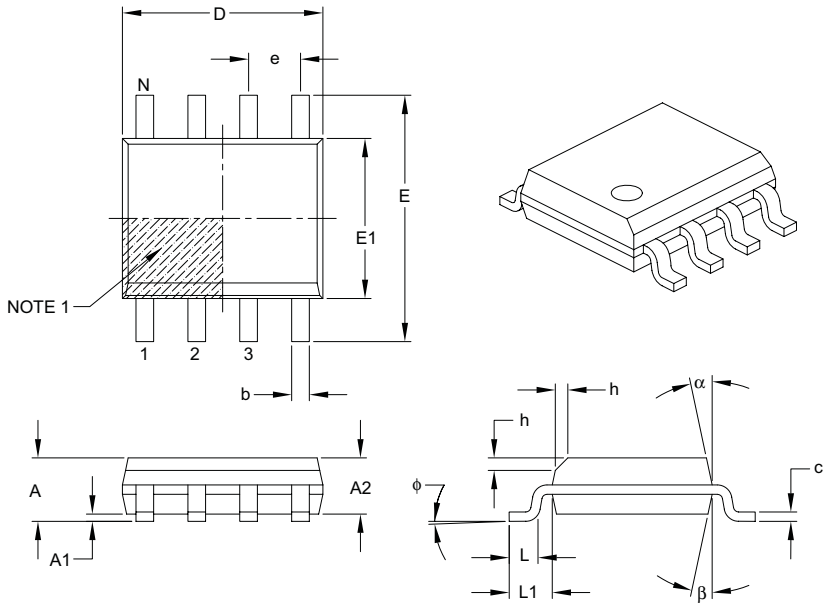

Units		MILLMETERS		
Dimension Limits		MIN	NOM	MAX
Number of Pins	N	8		
Pitch	e	1.27 BSC		
Overall Height	A	–	–	1.75
Molded Package Thickness	A2	1.25	–	–
Standoff §	A1	0.10	–	0.25
Overall Width	E	6.00 BSC		
Molded Package Width	E1	3.90 BSC		
Overall Length	D	4.90 BSC		
Chamfer (optional)	h	0.25	–	0.50
Foot Length	L	0.40	–	1.27
Footprint	L1	1.04 REF		
Foot Angle	φ	0°	–	8°
Lead Thickness	c	0.17	–	0.25
Lead Width	b	0.31	–	0.51
Mold Draft Angle Top	α	5°	–	15°
Mold Draft Angle Bottom	β	5°	–	15°

Notes:

1. Pin 1 visual index feature may vary, but must be located within the hatched area.
2. § Significant Characteristic.
3. Dimensions D and E1 do not include mold flash or protrusions. Mold flash or protrusions shall not exceed 0.15 mm per side.
4. Dimensioning and tolerancing per ASME Y14.5M.

   BSC: Basic Dimension. Theoretically exact value shown without tolerances.
   REF: Reference Dimension, usually without tolerance, for information purposes only.

Microchip Technology Drawing C04-057B

© 2007 Microchip Technology Inc.

8-Lead Plastic Micro Small Outline Package (MS) [MSOP]

Note: For the most current package drawings, please see the Microchip Packaging Specification located at http://www.microchip.com/packaging

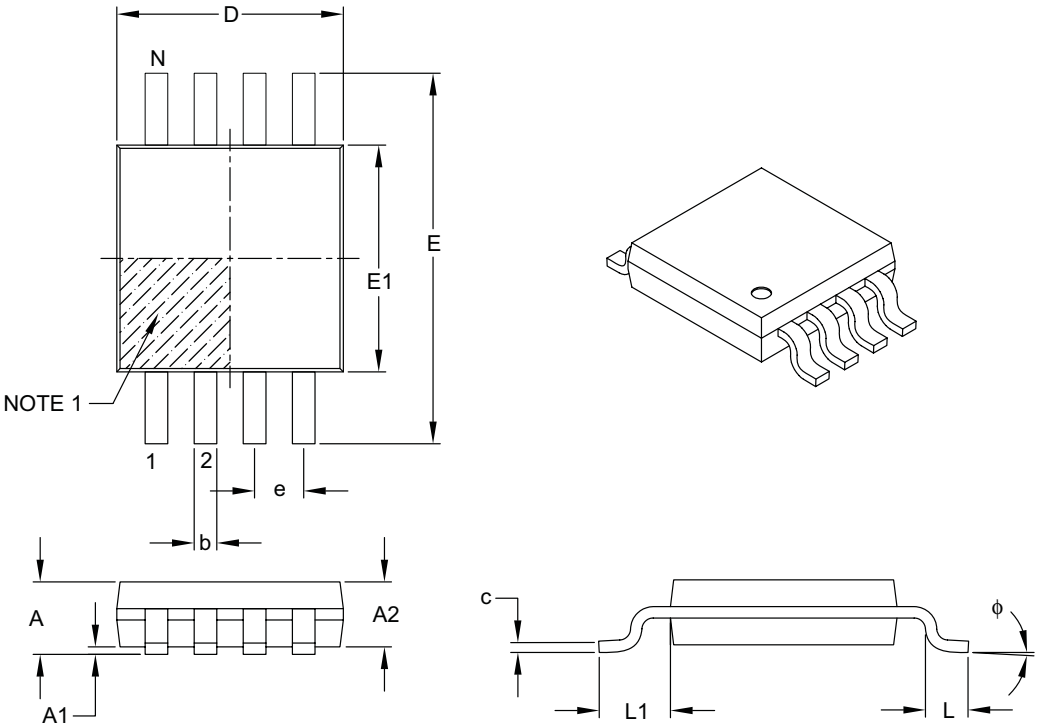

Units		MILLIMETERS		
Dimension Limits		MIN	NOM	MAX
Number of Pins	N	8		
Pitch	e	0.65 BSC		
Overall Height	A	–	–	1.10
Molded Package Thickness	A2	0.75	0.85	0.95
Standoff	A1	0.00	–	0.15
Overall Width	E	4.90 BSC		
Molded Package Width	E1	3.00 BSC		
Overall Length	D	3.00 BSC		
Foot Length	L	0.40	0.60	0.80
Footprint	L1	0.95 REF		
Foot Angle	ϕ	0°	–	8°
Lead Thickness	c	0.08	–	0.23
Lead Width	b	0.22	–	0.40

Notes:

1. Pin 1 visual index feature may vary, but must be located within the hatched area.
2. Dimensions D and E1 do not include mold flash or protrusions. Mold flash or protrusions shall not exceed 0.15 mm per side.
3. Dimensioning and tolerancing per ASME Y14.5M.

   BSC: Basic Dimension. Theoretically exact value shown without tolerances.

   REF: Reference Dimension, usually without tolerance, for information purposes only.

Microchip Technology Drawing C04-111B

8-Lead Plastic Thin Shrink Small Outline (ST) – 4.4 mm Body [TSSOP]

Note: For the most current package drawings, please see the Microchip Packaging Specification located at http://www.microchip.com/packaging

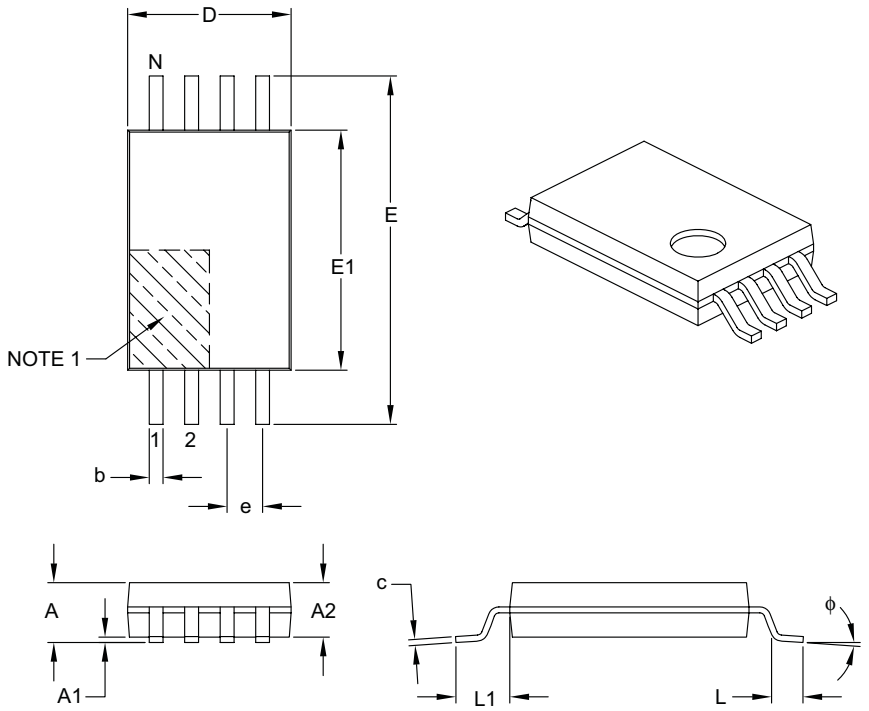

Units		MILLIMETERS		
Dimension Limits		MIN	NOM	MAX
Number of Pins	N	8		
Pitch	e	0.65 BSC		
Overall Height	A	–	–	1.20
Molded Package Thickness	A2	0.80	1.00	1.05
Standoff	A1	0.05	–	0.15
Overall Width	E	6.40 BSC		
Molded Package Width	E1	4.30	4.40	4.50
Molded Package Length	D	2.90	3.00	3.10
Foot Length	L	0.45	0.60	0.75
Footprint	L1	1.00 REF		
Foot Angle	ϕ	0°	–	8°
Lead Thickness	c	0.09	–	0.20
Lead Width	b	0.19	–	0.30

Notes:

1. Pin 1 visual index feature may vary, but must be located within the hatched area.
2. Dimensions D and E1 do not include mold flash or protrusions. Mold flash or protrusions shall not exceed 0.15 mm per side.
3. Dimensioning and tolerancing per ASME Y14.5M.

   BSC: Basic Dimension. Theoretically exact value shown without tolerances.

   REF: Reference Dimension, usually without tolerance, for information purposes only.

Microchip Technology Drawing C04-086B

© 2007 Microchip Technology Inc.

APPENDIX A: REVISION HISTORY

Revision C (January 2007)

This revision includes updates to the packaging diagrams.

NOTES:

© 2007 Microchip Technology Inc.

PRODUCT IDENTIFICATION SYSTEM

To order or obtain information, e.g., on pricing or delivery, refer to the factory or the listed sales office.

PART NO.	X	/XX
Device	Temperature Range	Package

Device:	MCP3001:	10-Bit Serial A/D Converter	
	MCP3001T:	10-Bit Serial A/D Converter (Tape and Reel) (SOIC and TSSOP only)	
Temperature Range:	I	=	-40°C to +85°C
Package:	P	=	Plastic DIP (300 mil Body), 8-lead
	SN	=	Plastic SOIC (150 mil Body), 8-lead
	MS	=	Plastic Micro Small Outline (MSOP), 8-lead
	ST	=	Plastic TSSOP (4.4 mm), 8-lead

Examples:

a) MCP3001-I/P: Industrial Temperature, PDIP package.

b) MCP3001-I/SN: Industrial Temperature, SOIC package.

c) MCP3001-I/ST: Industrial Temperature, TSSOP package.

d) MCP3001-I/MS: Industrial Temperature, MSOP package.

NOTES:

© 2007 Microchip Technology Inc.

Note the following details of the code protection feature on Microchip devices:

- Microchip products meet the specification contained in their particular Microchip Data Sheet.
- Microchip believes that its family of products is one of the most secure families of its kind on the market today, when used in the intended manner and under normal conditions.
- There are dishonest and possibly illegal methods used to breach the code protection feature. All of these methods, to our knowledge, require using the Microchip products in a manner outside the operating specifications contained in Microchip's Data Sheets. Most likely, the person doing so is engaged in theft of intellectual property.
- Microchip is willing to work with the customer who is concerned about the integrity of their code.
- Neither Microchip nor any other semiconductor manufacturer can guarantee the security of their code. Code protection does not mean that we are guaranteeing the product as "unbreakable."

Code protection is constantly evolving. We at Microchip are committed to continuously improving the code protection features of our products. Attempts to break Microchip's code protection feature may be a violation of the Digital Millennium Copyright Act. If such acts allow unauthorized access to your software or other copyrighted work, you may have a right to sue for relief under that Act.

Information contained in this publication regarding device applications and the like is provided only for your convenience and may be superseded by updates. It is your responsibility to ensure that your application meets with your specifications. MICROCHIP MAKES NO REPRESENTATIONS OR WARRANTIES OF ANY KIND WHETHER EXPRESS OR IMPLIED, WRITTEN OR ORAL, STATUTORY OR OTHERWISE, RELATED TO THE INFORMATION, INCLUDING BUT NOT LIMITED TO ITS CONDITION, QUALITY, PERFORMANCE, MERCHANTABILITY OR FITNESS FOR PURPOSE**.** Microchip disclaims all liability arising from this information and its use. Use of Microchip devices in life support and/or safety applications is entirely at the buyer's risk, and the buyer agrees to defend, indemnify and hold harmless Microchip from any and all damages, claims, suits, or expenses resulting from such use. No licenses are conveyed, implicitly or otherwise, under any Microchip intellectual property rights.

Trademarks

The Microchip name and logo, the Microchip logo, Accuron, dsPIC, KEELOQ, microID, MPLAB, PIC, PICmicro, PICSTART, PRO MATE, PowerSmart, rfPIC, and SmartShunt are registered trademarks of Microchip Technology Incorporated in the U.S.A. and other countries.

AmpLab, FilterLab, Migratable Memory, MXDEV, MXLAB, SEEVAL, SmartSensor and The Embedded Control Solutions Company are registered trademarks of Microchip Technology Incorporated in the U.S.A.

Analog-for-the-Digital Age, Application Maestro, CodeGuard, dsPICDEM, dsPICDEM.net, dsPICworks, ECAN, ECONOMONITOR, FanSense, FlexROM, fuzzyLAB, In-Circuit Serial Programming, ICSP, ICEPIC, Linear Active Thermistor, Mindi, MiWi, MPASM, MPLIB, MPLINK, PICkit, PICDEM, PICDEM.net, PICLAB, PICtail, PowerCal, PowerInfo, PowerMate, PowerTool, REAL ICE, rfLAB, rfPICDEM, Select Mode, Smart Serial, SmartTel, Total Endurance, UNI/O, WiperLock and ZENA are trademarks of Microchip Technology Incorporated in the U.S.A. and other countries.

SQTP is a service mark of Microchip Technology Incorporated in the U.S.A.

All other trademarks mentioned herein are property of their respective companies.

© 2007, Microchip Technology Incorporated, Printed in the U.S.A., All Rights Reserved.

Printed on recycled paper.

QUALITY MANAGEMENT SYSTEM
CERTIFIED BY DNV
ISO/TS 16949:2002

Microchip received ISO/TS-16949:2002 certification for its worldwide headquarters, design and wafer fabrication facilities in Chandler and Tempe, Arizona, Gresham, Oregon and Mountain View, California. The Company's quality system processes and procedures are for its PIC® MCUs and dsPIC DSCs, KEELOQ® code hopping devices, Serial EEPROMs, microperipherals, nonvolatile memory and analog products. In addition, Microchip's quality system for the design and manufacture of development systems is ISO 9001:2000 certified.

WORLDWIDE SALES AND SERVICE

AMERICAS

Corporate Office
2355 West Chandler Blvd.
Chandler, AZ 85224-6199
Tel: 480-792-7200
Fax: 480-792-7277
Technical Support:
http://support.microchip.com
Web Address:
www.microchip.com

Atlanta
Duluth, GA
Tel: 678-957-9614
Fax: 678-957-1455

Boston
Westborough, MA
Tel: 774-760-0087
Fax: 774-760-0088

Chicago
Itasca, IL
Tel: 630-285-0071
Fax: 630-285-0075

Dallas
Addison, TX
Tel: 972-818-7423
Fax: 972-818-2924

Detroit
Farmington Hills, MI
Tel: 248-538-2250
Fax: 248-538-2260

Kokomo
Kokomo, IN
Tel: 765-864-8360
Fax: 765-864-8387

Los Angeles
Mission Viejo, CA
Tel: 949-462-9523
Fax: 949-462-9608

Santa Clara
Santa Clara, CA
Tel: 408-961-6444
Fax: 408-961-6445

Toronto
Mississauga, Ontario,
Canada
Tel: 905-673-0699
Fax: 905-673-6509

ASIA/PACIFIC

Asia Pacific Office
Suites 3707-14, 37th Floor
Tower 6, The Gateway
Habour City, Kowloon
Hong Kong
Tel: 852-2401-1200
Fax: 852-2401-3431

Australia - Sydney
Tel: 61-2-9868-6733
Fax: 61-2-9868-6755

China - Beijing
Tel: 86-10-8528-2100
Fax: 86-10-8528-2104

China - Chengdu
Tel: 86-28-8665-5511
Fax: 86-28-8665-7889

China - Fuzhou
Tel: 86-591-8750-3506
Fax: 86-591-8750-3521

China - Hong Kong SAR
Tel: 852-2401-1200
Fax: 852-2401-3431

China - Qingdao
Tel: 86-532-8502-7355
Fax: 86-532-8502-7205

China - Shanghai
Tel: 86-21-5407-5533
Fax: 86-21-5407-5066

China - Shenyang
Tel: 86-24-2334-2829
Fax: 86-24-2334-2393

China - Shenzhen
Tel: 86-755-8203-2660
Fax: 86-755-8203-1760

China - Shunde
Tel: 86-757-2839-5507
Fax: 86-757-2839-5571

China - Wuhan
Tel: 86-27-5980-5300
Fax: 86-27-5980-5118

China - Xian
Tel: 86-29-8833-7250
Fax: 86-29-8833-7256

ASIA/PACIFIC

India - Bangalore
Tel: 91-80-4182-8400
Fax: 91-80-4182-8422

India - New Delhi
Tel: 91-11-4160-8631
Fax: 91-11-4160-8632

India - Pune
Tel: 91-20-2566-1512
Fax: 91-20-2566-1513

Japan - Yokohama
Tel: 81-45-471- 6166
Fax: 81-45-471-6122

Korea - Gumi
Tel: 82-54-473-4301
Fax: 82-54-473-4302

Korea - Seoul
Tel: 82-2-554-7200
Fax: 82-2-558-5932 or
82-2-558-5934

Malaysia - Penang
Tel: 60-4-646-8870
Fax: 60-4-646-5086

Philippines - Manila
Tel: 63-2-634-9065
Fax: 63-2-634-9069

Singapore
Tel: 65-6334-8870
Fax: 65-6334-8850

Taiwan - Hsin Chu
Tel: 886-3-572-9526
Fax: 886-3-572-6459

Taiwan - Kaohsiung
Tel: 886-7-536-4818
Fax: 886-7-536-4803

Taiwan - Taipei
Tel: 886-2-2500-6610
Fax: 886-2-2508-0102

Thailand - Bangkok
Tel: 66-2-694-1351
Fax: 66-2-694-1350

EUROPE

Austria - Wels
Tel: 43-7242-2244-39
Fax: 43-7242-2244-393

Denmark - Copenhagen
Tel: 45-4450-2828
Fax: 45-4485-2829

France - Paris
Tel: 33-1-69-53-63-20
Fax: 33-1-69-30-90-79

Germany - Munich
Tel: 49-89-627-144-0
Fax: 49-89-627-144-44

Italy - Milan
Tel: 39-0331-742611
Fax: 39-0331-466781

Netherlands - Drunen
Tel: 31-416-690399
Fax: 31-416-690340

Spain - Madrid
Tel: 34-91-708-08-90
Fax: 34-91-708-08-91

UK - Wokingham
Tel: 44-118-921-5869
Fax: 44-118-921-5820

12/08/06

© 2007 Microchip Technology Inc.

Мы молодая и активно развивающаяся компания в области поставок электронных компонентов. Мы поставляем электронные компоненты отечественного и импортного производства напрямую от производителей и с крупнейших складов мира.

Благодаря сотрудничеству с мировыми поставщиками мы осуществляем комплексные и плановые поставки широчайшего спектра электронных компонентов.

Собственная эффективная логистика и склад в обеспечивает надежную поставку продукции в точно указанные сроки по всей России.

Мы осуществляем техническую поддержку нашим клиентам и предпродажную проверку качества продукции. На все поставляемые продукты мы предоставляем гарантию .

Осуществляем поставки продукции под контролем ВП МО РФ на предприятия военно-промышленного комплекса России , а также работаем в рамках 275 ФЗ с открытием отдельных счетов в уполномоченном банке. Система менеджмента качества компании соответствует требованиям ГОСТ ISO 9001.

Минимальные сроки поставки, гибкие цены, неограниченный ассортимент и индивидуальный подход к клиентам являются основой для выстраивания долгосрочного и эффективного сотрудничества с предприятиями радиоэлектронной промышленности, предприятиями ВПК и научно-исследовательскими институтами России.

С нами вы становитесь еще успешнее!

Наши контакты:

Телефон: +7 812 627 14 35

Электронная почта: sales@st-electron.ru

Адрес: 198099, Санкт-Петербург, Промышленная ул, дом № 19, литера Н, помещение 100-Н Офис 331