ADE3800

Analog LCD Display Engine for XGA and SXGA Resolutions with Embedded LVDS and RSDS Transmitters

Feature Overview

- Programmable Context Sensitive™ Filtering
- High-quality Up-scaling and Down-scaling
- Integrated 10-bit Triple Channel ADC/PLL
- IQSync™ AutoSetup
- Integrated Programmable Timing Controller
- Integrated LVDS Transmitters
- Integrated Pattern Generator
- Perfect Picture™ Technology
- sRGB 3D Color Warp
- High performance OSD supporting 1- to 4-bpp, proportional fonts
- Advanced EMI reduction features
- Serial I²C interface
- Low power 0.15 µm process technology
- Low cost 100-pin LQFP and 128-pin LQFP packages
- Lead-free versions available in 2005.

General Description

ADE3800 devices are a family of highly-integrated display engine ICs, enabling the most advanced, flexible, and cost-effective system-on-chip solutions for analog-only input LCD display applications.

The ADE3800 covers the full range of XGA and SXGA analog-only monitor applications using LVDS or RSDS interface.

The ADE3800 family is software compatible.

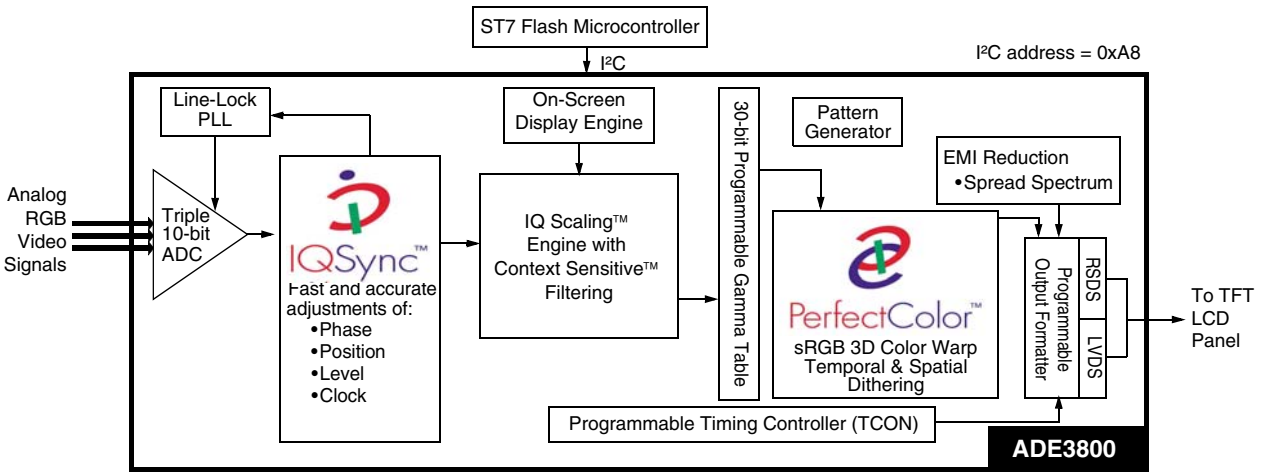

LCD Scaler Product Selector

Product	Package	Output Format Support		
		Resolution	RSDS/TCON	LVDS
ADE3800XL	100 LQFP	Up to XGA 75 Hz		Yes
ADE3800XT	100 LQFP	Up to XGA 75 Hz	Yes	
ADE3800SXL	100 LQFP	Up to SXGA 75 Hz		Yes
ADE3800SXT	128 LQFP	Up to SXGA 75 Hz	Yes	

Context Sensitive™ Scaler

- Sharper text with Edge Enhancement
- Programmable coefficients for unique customization
- From 5:1 upscale to 2:1 downscale
- Independent X - Y axis zoom and shrink

Analog RGB input

- 140 MHz 10-bit ADC
- Ultra low jitter digital Line Lock PLL
- Composite Sync and Sync on Green built-in support

IQsync™ AutoSetup

- AutoSetup configures phase, clock, level, and position
- Automatically detects activity on input
- Compatible with all standard VESA and GTF modes

Perfect Picture™ Technology

- Video & Picture highlight zone
- Supports up to 4 different windows
- Independent window controls for contrast, brightness and color

Perfect Color™ Technology

- Programmable 3D Color Warp
- Digital brightness, contrast, hue, and saturation gamma controls
- Simple white point control
- Compatible with sRGB standard
- True color dithering for 18 and 24-bit panels
- Temporal and spatial dithering
- 30-bit programmable gamma table

OSD Engine

- 12 KB RAM based 12x18 characters
- 1, 2, 3, 4-bit per pixel color characters
- Multiple Windows
- Bordering, shadowing, transparency, fade-in and fade-out effects
- Supports font rotation
- Up to full screen size, multiple windows
- 64-entry TrueColor LUT with alpha-blending

Programmable Timing Controller (TCON)

- Highly programmable support for XGA and SXGA smart panels
- RSDS split line support for SXGA smart panels
- Supports 18, 24, 36, and 48-bit RSDS outputs
- Advanced Flicker Detection and Reduction
- 8 programmable timing signals for row/column control
- Wide range of drivers & TCON compatibility

Integrated LVDS Transmitters

- Dual 4 channel 6/8 bit LVDS transmitters
- Programmable channel swapping
- Programmable channel polarity
- Programmable group channel swapping for flexibility in board layout
- Programmable output swing control

Advanced EMI Reduction Features

- Flexible data transition minimization, single and dual
- Differential clock and signals
- Spread spectrum - programmable digital FM modulation of the output clock with no external components

Output Format

- Supports resolutions up to SXGA @ 75Hz
- Supports resolution above SXGA (1280x1024) with convenient input and output pixel clocks
- Supports 6 or 8-bit Panels
- Supports single or double pixel wide formats

Table of Contents

Chapter 1 Important Information 6

Chapter 2 General Description 7

Chapter 3 Pin Descriptions 11

Chapter 4 Register Description by Block 18

4.1 Global Control (GLBL) 18
4.2 Frequency Synthesizer (FSYN) 20
4.2.1 Dotclock vs Outclock 20
4.3 Analog-to-Digital Converter (ADC) 21
4.3.1 216MHz Frequency Synthesizer 22
4.3.2 Sync-on-Green (SOG) 22
4.4 Analog Dithering (ADTH) 29
4.4.1 Function 29
4.4.2 Addressing Technique 29
4.4.3 Output Amplitude Control 29
4.4.4 Miscellaneous 29
4.5 Line Lock PLL (LLK) 30
4.6 Sync Retiming (SRT) 33
4.6.1 Coast Signal 33
4.7 Input Sync Measurement (SMEAS) 36
4.7.1 Input Sync - Activity Detection 36
4.7.2 Input Sync - Measurement 37
4.7.3 Fast Mute 37
4.8 Sync Multiplexer (SMUX) 43
4.9 Data Measurement (DMEAS) 47
4.9.1 Function Summary 47
4.9.2 Window Control 47
4.9.3 Algorithm Control 47
4.9.4 Mode Control 48
4.9.5 Edge Intensity 48
4.9.6 Pixel Sum 48
4.9.7 Min / Max 48
4.9.8 Pixel Cumulative Distribution (PCD) 49

4.9.9 H Position Min / Max . . . 49
4.9.10 V Position Min / Max . . . 50
4.9.11 DE Size . . . 50
4.10 Scale (SCL) . . . 53
4.10.1 Frame Synchronization . . . 54
4.10.2 Context Description . . . 57
4.10.3 Scale Kernel Example . . . 58
4.11 Pattern Generator (PGEN) . . . 59
4.11.1 Overview . . . 59
4.11.2 Color Mask Sequencer . . . 60
4.11.3 8 x 8 Grid Layout with Optional Resets . . . 62
4.11.4 Borders . . . 63
4.11.5 TCON Window Control . . . 64
4.12 sRGB (SRGB) . . . 68
4.12.1 Parametric Gamma, Digital Contrast / Brightness on Multiple Windows . . . 68
4.12.2 Color Space Warp . . . 68
4.13 Gamma (GAM) . . . 71
4.14 On-Screen Display (OSD) . . . 72
4.14.1 Implementation . . . 76
4.14.2 Color LUT Calculation . . . 78
4.14.3 Alpha Blending . . . 78
4.14.4 RAM Memory . . . 81
4.15 Flicker (FLK) . . . 88
4.15.1 Function . . . 88
4.16 Adaptive Phase Control (APC) . . . 92
4.16.1 Function . . . 92
4.16.2 Addressing Technique . . . 92
4.16.3 Dither threshold Control . . . 92
4.17 Output Mux (OMUX) . . . 94
4.17.1 Output Data . . . 98
4.17.2 Output Clocks . . . 101
4.17.3 Clock Sources and Timing Considerations . . . 101
4.18 Timing Controller (TCON) . . . 102
4.19 LVDS/RSDS Features . . . 113
4.19.1 Output Channels . . . 114
4.20 Pulse Width Modulation (PWM) . . . 119
4.21 I²C Block Transfer (I2CBKT) . . . 120
4.21.1 Transfer Setup and Start . . . 120

4.21.2 Transfer Progress 120
4.21.3 Concurrent I2C Transfers 120
4.22 I²C Registers and RAM Addresses 122
4.22.1 I2C Transfer Format 122
4.22.2 Dedicated RAM Areas per Block 122
4.22.3 Multi-byte Registers 122

Chapter 5 Electrical Specifications 124
5.1 Absolute Maximum Ratings 124
5.2 Nominal Operating Conditions 124
5.3 Preliminary Thermal Data 126
5.4 Preliminary DC Specifications 126
5.4.1 LVTTL 5-Volt Tolerant Inputs with Hysteresis 126
5.4.2 LVTTL 3-Volt Tolerant Inputs with Hysteresis 126
5.4.3 LVTTL 5-Volt Tolerant I/O with Hysteresis 126
5.4.4 LVTTL 3-Volt Tolerant I/O 127
5.4.5 LVTTL 3-Volt Tolerant I/O 127
5.5 LVDS Outputs 127
5.6 RSDS Outputs 127
5.7 ADC Characteristics 128

Chapter 6 Package Mechanical Data 129
6.1 100 Pin LQFP 129
6.2 128 Pin LQFP 130

Chapter 7 Scaler Equations 132

Chapter 8 ADE3800 vs ADE3700 133

Chapter 9 Glossary 136

Chapter 10 Revision History 137

1 Important Information

- XCLK: Crystal oscillator, usually 27 MHz.
- INCLK: ADC Sampling clock frequency, depends on input video mode pixel rate.
- DOTCLK and OUTCLK: Related to Panel Output Pixel Rate.
- SCLK: Scale Clock used for the line buffer Ram and picture zooming.
- If some bit fields are missing, these bits are marked as "reserved":
  — return 0 when read, but it is also the user's duty to mask them upon readout, to ensure compatibility with later device releases
  — must be written to 0 when the whole register is written

  in all cases, the default reset value always prevails
- An asterisk denotes the default reset value for the corresponding bit(s).
- Unless all addresses and registers values are in hexadecimal.
- “not sticky” means dynamically updated (set or reset) by hardware, not a static bit.
- A “sticky” bit, once set remains set until the user clears it.
- When a value is followed by “typ” this means it is a typical value and PVT dependent.
- If a time or delay value does not have “min/typ/max” information, it is proportional to the XCLK frequency.
- Any register names containing HW are shadow registers: they report which value is currently being used by the chip.
- When a register bit field list has one bold option, it is the only choice for normal mode of operation.
- TCON must always be programmed for any panel type.
- Values spread out over several registers are organised as follows:

32-bit values		24-bit values		16-bit values	
_0	LSB	_L or _0	LSB	_L	LSB
_1		_M or _1	MSB	_U	USB
_2		_U or _2	USB		
_3	USB				

2 General Description

The ADE3800 family of devices is capable of implementing all of the advanced features of todays LCD monitor products. For maximum flexibility, an external microcontroller (MCU) is used for controlling the ADE3800 and other monitor functions.

Figure 1: ADE3800 Block Diagram

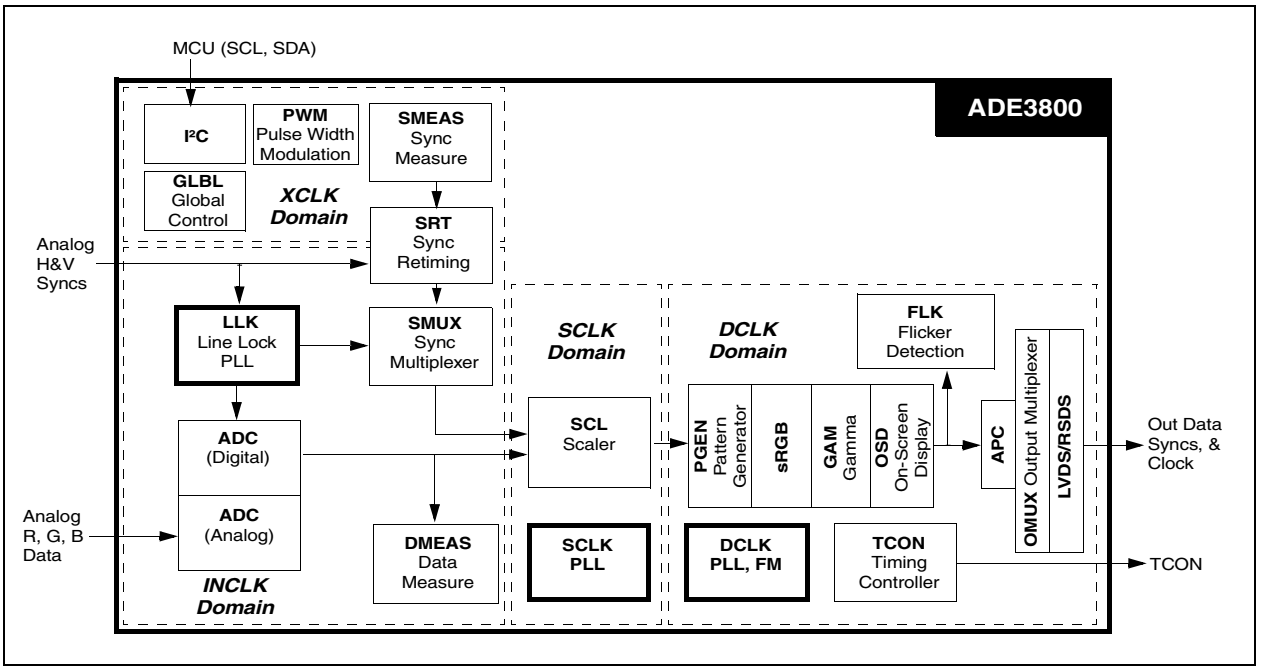

The ADE3800 architecture unburdens the MCU from all data-intensive pixel manipulations, providing an optimal blend of features and code customizing without incurring the cost of a 16-bit processor or memory. The key interactions between the monitor MCU and the ADE3800 can be broken down into the features shown in Table 1.

Table 1: ADE3800 Features (Sheet 1 of 2)

Feature	Description of ADE3800 Operation	Blocks Used	Pages
Power-up / Initialize	When power is first applied, the ADE3800 is asynchronously reset from a pin. The MCU typically programs the ADE3800 with a number of default values and sets up the ADE3800 to identify activity on any of the input pins. All pre-configured values and RAMs, such as line-lock PLL settings, OSD characters, LCD timing values (output sequencer), scale kernels, gamma curves, sRGB color warp, APC dithering, output pin configuration (OMUX), etc. can be pre-loaded into the ADE3800. The typical end state is that the ADE3800 is initialized into a low power mode, ready to turn active once the power button is pressed.	GLBL SMEAS LLK ADC OSD SCALER GAMMA SRGB TCON APC OMUX	18 36 30 21 72 53 71 68 102 92 94
Activity Detect	When the monitor has been powered on, the inputs can be monitored for active video sources. Based on the activity monitors, the MCU chooses an input or power down state.	SMEAS	36

Table 1: ADE3800 Features (Sheet 2 of 2)

Feature	Description of ADE3800 Operation	Blocks Used	Pages
Sync / Timing Measurement	Once an input source is selected, all available information on frequencies and line/pixel counts is measured for the selected source and made available to the MCU.	SMEAS	36
Mode Set	Once the MCU has determined the matching video mode or calculated a video mode using a GTF algorithm, the datapath is programmed to drive the flat panel. Clock frequencies for the internal memory and datapath are also set at this time.	GLBL LLK SRT SMUX SCALER	18 30 33 43 53
Autotune	When the MCU calls for an autotune, the MCU sets up an iterative loop to search for the best phase, gain, offset, etc. At each step of the loop, the MCU kicks off a test in which the ADE3800 performs extensive statistical analysis of the incoming data stream. The results of the analysis are made available to the MCU which is responsible for the optimization algorithm.	DMEAS LLK ADC SMUX SRT	47 30 21 43 33
Digital Contrast / Brightness	In response to user OSD control, the MCU can program single 8-bit registers that set brightness and contrast for each color channel independently.	SRGB	68
White Point Control	In response to user OSD control, the MCU can program three 8-bit registers that set the white point for the output.	SRGB	68
GAMMA Adjustment	The MCU can program the gamma RAMs to implement 10-bit accurate color transformations to match the panel color characteristics.	GAMMA	71
sRGB Control	Allows simple, intuitive color control for parametric gamma correction and 3D color cube warping.	SRGB	68
Pattern Generation	For production testing, the ADE3800 can be programmed by the MCU to output a wide set of test patterns.	PGEN	59
Flicker Reduction	For Smart Panel applications, the MCU can set up the flicker detection block to report any correlation with the polarity inversion signal. The MCU can then change the polarity inversion to a non-correlating pattern to eliminate flicker.	FLICKER TCON	88 102
Backlight Control	The ADE3800 provides two PWM outputs for direct control of the power components in a typical backlight. The MCU sets up the registers and enables the function.	PWM	119
Low Power State	To enter a low power state, the MCU can gate off most of the clocks and put the analog blocks into a low power standby state.	GLBL	18

The following table gives a brief description of each block of the ADE3800:

Table 2: ADE3800 Block Descriptions

Block	Description
Global Control (GLBL)	Responsible for selecting clock sources, power control, I²C control and block by block synchronous reset generation
Frequency Synthesizer (FSYN)	Generates the output clock (also known as the dot clock & DCLK) and the scaler clock (SCLK). Frequency modulation, phase control, and pulse extension (duty cycle control) of the output clock are also provided.
Analog-to-Digital Converter (ADC)	Has the following features: - Supports input clocks up to 140MHz (SXGA 75Hz) - Adjustable analog amplifier bandwidth - Differential RGB input path for noise immunity - Built-in Sync-on-Green support - Individual RGB clock delay control - Power down control - Linear and independent Gain/Offset adjustment
Analog Dithering (ADTH)	Generates a 3-bit dither pattern to tune the 10-bit resolution of the ADC block.
Line Lock PLL (LLK)	Generates the ADC sample clock from an incoming HSync source.
Sync Retiming (SRT)	Retimes synchronization signals (e.g. HSync and VSync) into either the XCLK or in-clock domains.
Input Sync Measurement (SMEAS)	Monitors input port activity and measures input sync signals from all sources.
Sync Multiplexer (SMUX)	Synthesizes clamp and horizontal and vertical enable signals from input sync signals. Selects which signals continue to the scaler block
Data Measurement (DMEAS)	Measures several characteristics of the pixel data and sync signals.
Scale (SCL)	Resizes images from one resolution to another.
Pattern Generator (PGEN)	Provides the ability of displaying a set of useful graphic patterns to help debugging and testing LCD panels.
sRGB (SRGB)	Performs parametric gamma correction on multiple windows or full screen, used for video enhancement in a window and digital contrast/brightness control. Allows 3D color cube warping RGB color space.
Gamma (GAM)	Implements three independent 256 point gamma curves for each of R, G, and B channels.
On-Screen Display (OSD)	Has the following features: - One RAM block 4096x24 is used for the full operation of the OSD. - The characters can be displayed anywhere on the screen. - Horizontal/Vertical Start location for each row in the OSD. - Global Alpha blending for all the characters displayed as well as Alpha blending per color with 16 levels. - Horizontal/Vertical flip based per character. - 1bpp/2bpp/3bpp/4bpp characters supported. - Rotation supported by means of having a 18x12 pixel character or 12x18 pixel character. - Color LUT of 64 colors (24bit RGB True Color)
Flicker (FLK)	Computes a nonlinear correlation of LCD polarity inversion patterns and the LCD output data stream and provides the correlation results as scores to the microcontroller.
Adaptive Phase Control (APC)	Generates a 2-bit dither pattern for an 8-bit panel or a 4-bit dither pattern for a 6-bit panel to visually improve the amplitude resolution of the 10-bit RGB output signal.

Table 2: ADE3800 Block Descriptions

Block	Description
Output Mux (OMUX)	An extension of the ADE3700 output mux block. The major changes are: - LVDS controls - RSDS split line buffer
Timing Controller (TCON)	Provides timing for Smart Panel applications and other applications that are sensitive to output synchronization timing. The timing unit is based on horizontal and vertical counters, which are locked with the output video stream.
LVDS/RSDS Features	Has the following features: - Power down - Output swing and common mode programmable - Individual channel programmable delay - Programmable LVDS clock output polarity
Pulse Width Modulation (PWM)	Generates two signals that can be used to control backlight inverter switching power components directly. It is derived from XCLK and can be powered up independently of the DOTCLK and INCLK domains.
I²C Block Transfer (I2CBKT)	Allows the internal I²C parallel bus to be driven by an xclk state machine to perform rapid block transfers between internal addresses.
I²C Registers and RAM Addresses	Memory mapping of all RAM and register locations accessible by I²C.

3 Pin Descriptions

Figure 2: LQFP100 Pinout Diagram

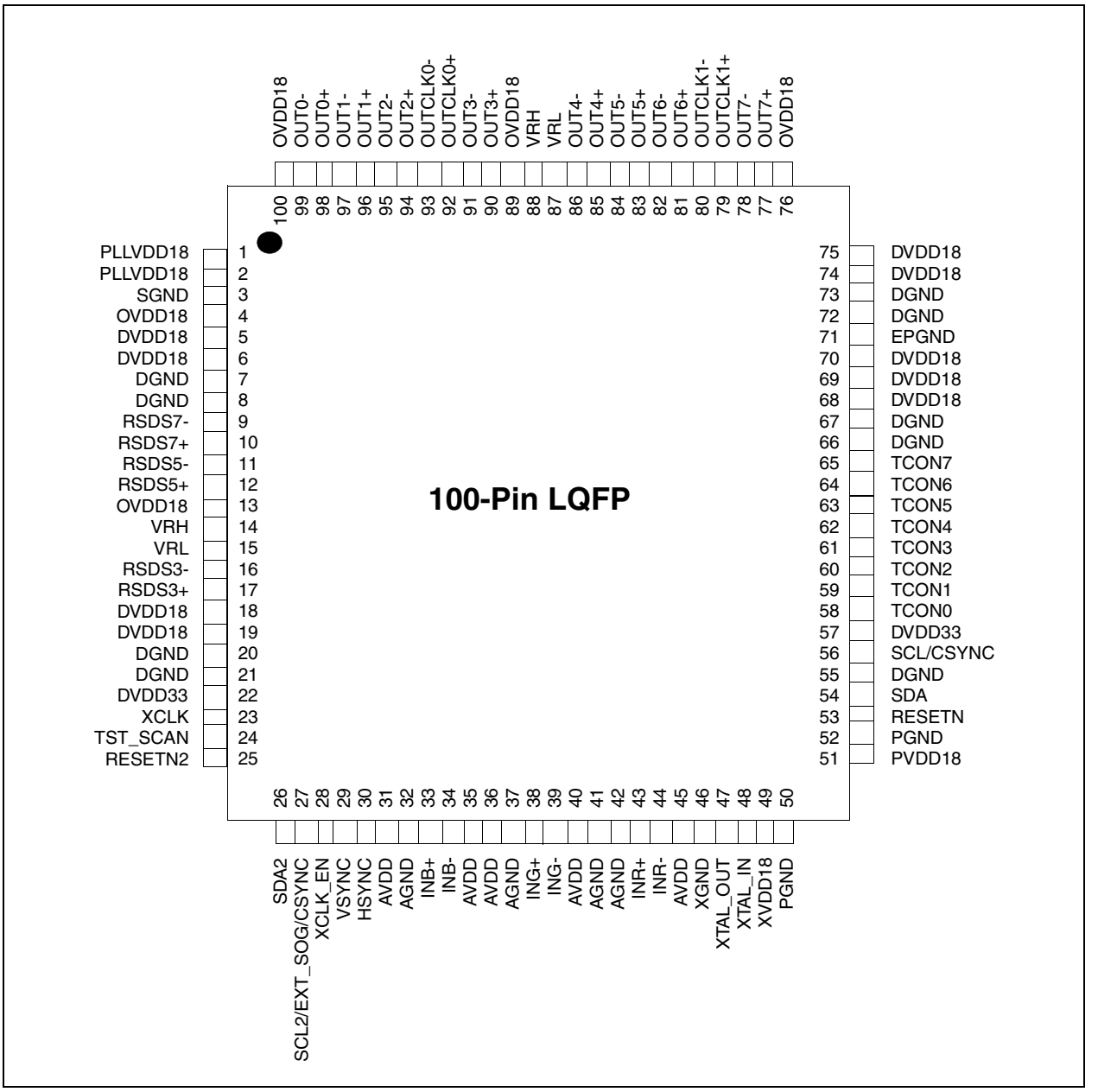

Figure 3: LQFP128 Pinout Diagram

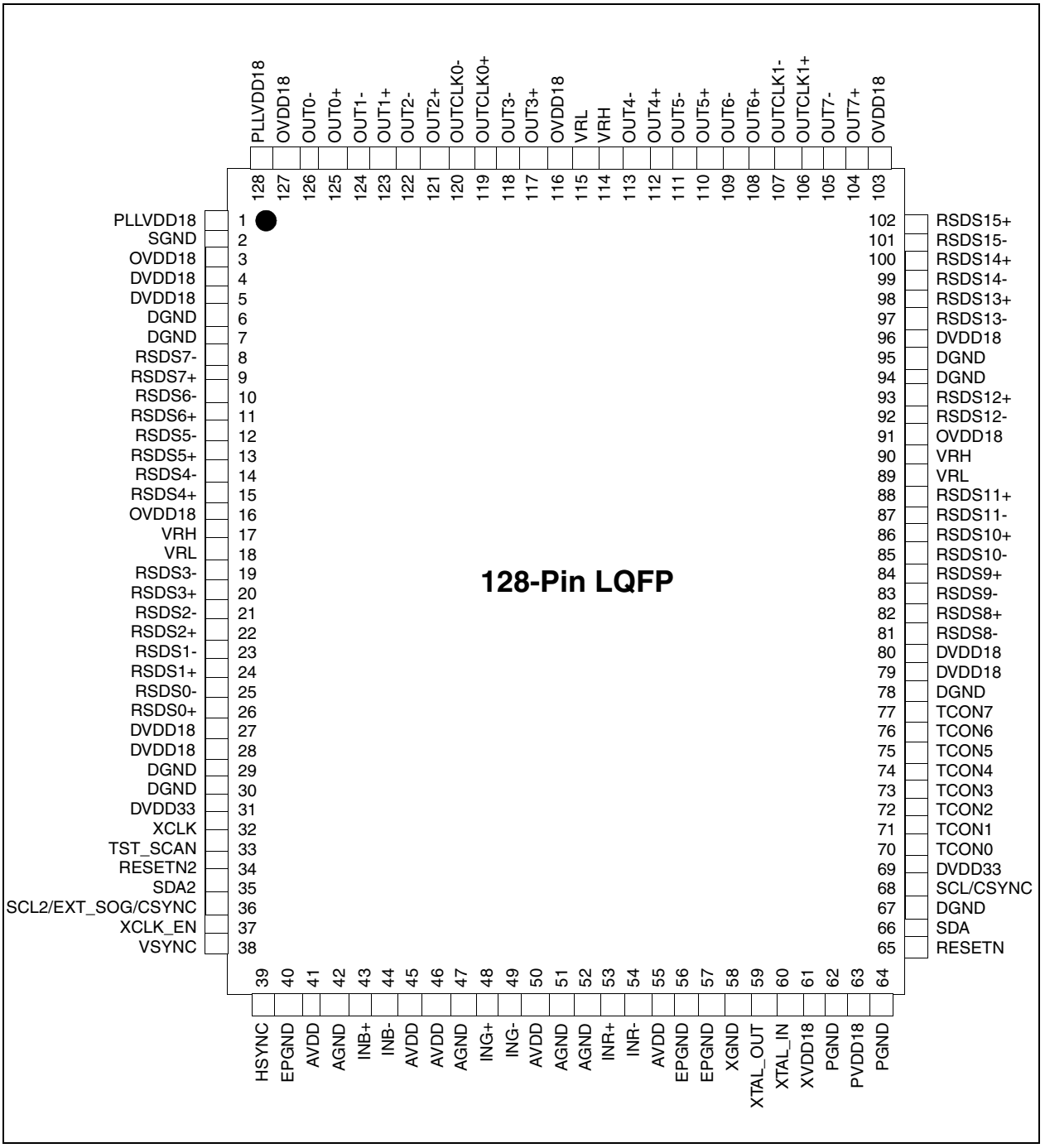

Table 3: Analog Input Signals (Sheet 1 of 2)

LQFP100	LQFP128	Name	Input/ Output	Description
43	53	INR+	I	Positive ADC Red Channel Input
44	54	INR-	I	Negative ADC Red Channel Input

Table 3: Analog Input Signals (Sheet 2 of 2)

LQFP100	LQFP128	Name	Input/ Output	Description
38	48	ING+	I	Positive ADC Green Channel Input
39	49	ING-	I	Negative ADC Green Channel Input
33	43	INB+	I	Positive ADC Blue Channel Input
34	44	INB-	I	Negative ADC Blue Channel Input
29	38	VSYNC	I	Vertical Sync Input Signal
30	39	HSYNC	I	Horizontal Sync or Composite Sync Input Signal

Table 4: Output Signals and TCON Signals (Sheet 1 of 2)

LQFP100	LQFP128	Name	Input/ Output	Description
	25	RSDS0-	O	RSDS Channel 0 Data -
	26	RSDS0+	O	RSDS Channel 0 Data +
	23	RSDS1-	O	RSDS Channel 1 Data -
	24	RSDS1+	O	RSDS Channel 1 Data +
	21	RSDS2-	O	RSDS Channel 2 Data -
	22	RSDS2+	O	RSDS Channel 2 Data +
16	19	RSDS3-	O	RSDS Channel 3 Data -
17	20	RSDS3+	O	RSDS Channel 3 Data +
	14	RSDS4-	O	RSDS Channel 4 Data -
	15	RSDS4+	O	RSDS Channel 4 Data +
11	12	RSDS5-	O	RSDS Channel 5 Data -
12	13	RSDS5+	O	RSDS Channel 5 Data +
	10	RSDS6-	O	RSDS Channel 6 Data -
	11	RSDS6+	O	RSDS Channel 6 Data +
9	8	RSDS7-	O	RSDS Channel 7 Data -
10	9	RSDS7+	O	RSDS Channel 7 Data +
	81	RSDS8-	O	RSDS Channel 8 Data -
	82	RSDS8+	O	RSDS Channel 8 Data +
	83	RSDS9-	O	RSDS Channel 9 Data -
	84	RSDS9+	O	RSDS Channel 9 Data +
	85	RSDS10-	O	RSDS Channel 10 Data -
	86	RSDS10+	O	RSDS Channel 10 Data +
	87	RSDS11-	O	RSDS Channel 11 Data -
	88	RSDS11+	O	RSDS Channel 11 Data +
	92	RSDS12-	O	RSDS Front Side CLK-
	93	RSDS12+	O	RSDS Front Side CLK+
	97	RSDS13-	O	RSDS Channel 13 Data-
	98	RSDS13+	O	RSDS Channel 13 Data+

Table 4: Output Signals and TCON Signals (Sheet 2 of 2)

LQFP100	LQFP128	Name	Input/ Output	Description
	99	RSDS14-	O	RSDS Channel 14 Data-
	100	RSDS14+	O	RSDS Channel 14 Data+
	101	RSDS15-	O	RSDS Channel 15 Data-
	102	RSDS15+	O	RSDS Channel 15 Data+
98	125	OUT0+	O	+LVDS Channel 0 Differential Data Output or RSDS Channel 16 Data +
99	126	OUT0-	O	-LVDS Channel 0 Differential Data Output or RSDS Channel 16 Data -
96	123	OUT1+	O	+LVDS Channel 1 Differential Data Output or RSDS channel 17 Data +
97	124	OUT1-	O	-LVDS Channel 1 Differential Data Output or RSDS Channel 17 Data -
94	121	OUT2+	O	+LVDS Channel 2 Differential Data Output or RSDS Channel 18 Data +
95	122	OUT2-	O	-LVDS Channel 2 Differential Data Output or RSDS Channel 18 Data -
90	117	OUT3+	O	+LVDS Channel 3 Differential Data Output or RSDS Channel 19 Data +
91	118	OUT3-	O	-LVDS Channel 3 Differential Data Output or RSDS Channel 19 Data -
85	112	OUT4+	O	+LVDS Channel 4 Differential Data Output or RSDS Back Side CLK-
86	113	OUT4-	O	-LVDS Channel 4 Differential Data Output or RSDS Back Side CLK+
83	110	OUT5+	O	+LVDS Channel 5 Differential Data Output or RSDS Channel 22 Data +
84	111	OUT5-	O	-LVDS Channel 5 Differential Data Output or RSDS Channel 22 Data -
81	108	OUT6+	O	+LVDS Channel 6 Differential Data Output or RSDS Channel 23 Data +
82	109	OUT6-	O	-LVDS Channel 6 Differential Data Output or RSDS Channel 23 Data -
77	104	OUT7+	O	+LVDS Channel 7 Differential Data Output or RSDS Channel 24 Data +
78	105	OUT7-	O	-LVDS Channel 7 Differential Data Output or RSDS Channel 24 Data -
92	119	OUTCLK0+	O	+LVDS Channel A Differential Clock Output or RSDS Channel 20 Data +
93	120	OUTCLK0-	O	-LVDS Channel A Differential Clock Output or RSDS Channel 20 Data -
79	106	OUTCLK1+	O	+LVDS Channel B Differential Clock Output or RSDS Channel 25 Data +
80	107	OUTCLK1-	O	-LVDS Channel B Differential Clock Output or RSDS Channel 25 Data -
58	70	TCON0	O	TCON Output 0 or PWM B Output
59	71	TCON1	O	TCON Output 1 or PWM A Output
60	72	TCON2	O	TCON Output 2
61	73	TCON3	O	TCON Output 3
62	74	TCON4	O	TCON Output 4
63	75	TCON5	O	TCON Output 5
64	76	TCON6	O	TCON Output 6
65	77	TCON7	O	TCON Output 7

Table 5: System Controls (Sheet 1 of 2)

LQFP100	LQFP128	Name	Input/ Output	Description
47	59	XTAL_OUT	O	Crystal Oscillator output
48	60	XTAL_IN	I	Crystal Oscillator input

Table 5: System Controls (Sheet 2 of 2)

LQFP100	LQFP128	Name	Input/ Output	Description
23	32	XCLK	I/O	Crystal clock buffered output. Controlled by XCLK_EN pin
28	37	XCLK_EN	I	Crystal clock output enable. When connected to 3.3 V, the XCLK output is active When connected to Ground, the XCLK output is disabled
25	34	RESETN2	I	Reset 2 input[a]. Active Low
53	65	RESETN	I	Reset input[1]. Active Low
54	66	SDA	I/O	I2C Data[b]. Open drain
56	68	SCL/CSYNC	I	I2C Clock[c] or Composite Sync Input Signal
26	35	SDA2	I/O	I2C 2 Data[2]. Open drain
27	36	SCL2/EXT_SOG/ CSYNC	I	I2C 2 Clock[3] or Composite Sync Input Signal
24	33	TST_SCAN	I	Reserved for test. Should be connected to Digital Ground

a. RESETN and RESETN2 pins are ORed together internally. The pin which is not used must be connected to ground.

b. The SDA and SDA2 pins share the same internal bi-directional control. The pin that is not used reverts as output and must be left floating or connected to a pull-up resistor.

c. This device has two RESET/I2C ports (RESETN/SCL/SDA or RESETN2/EXT_SOG/SDA2) to facilitate PCB layout. The state of the two RESET pins determines which RESET/I2C port is active. The RESET pin that is held in the low state disables that RESET/I2C port for normal RESET/I2C operations. However, the disabled ports SCL input (either SCL or EXT_SOG) can be used as a CSYNC input from an external CSYNC extractor. If this CSYNC input is not required, then the unused SCL pin should be connected to ground

Table 6: Digital Section Power Supply Pins (Sheet 1 of 2)

LQFP100	LQFP128	Name	Description
5	4	DVDD18	Digital 1.8V Supply
6	5	DVDD18	Digital 1.8V Supply
7	6	DGND	Digital Ground
8	7	DGND	Digital Ground
18	27	DVDD18	Digital 1.8V Supply
19	28	DVDD18	Digital 1.8V Supply
20	29	DGND	Digital Ground
21	30	DGND	Digital Ground
22	31	DVDD33	Digital 3.3V Supply
55	67	DGND	Digital Ground
57	69	DVDD33	Digital 3.3V Supply
66	78	DGND	Digital Ground
67		DGND	Digital Ground
68	79	DVDD18	Digital 1.8V Supply
69	80	DVDD18	Digital 1.8V Supply

Table 6: Digital Section Power Supply Pins (Sheet 2 of 2)

LQFP100	LQFP128	Name	Description
70		DVDD18	Digital 1.8V Supply
72	94	DGND	Digital Ground
73	95	DGND	Digital Ground
74	96	DVDD18	Digital 1.8V Supply
75		DVDD18	Digital 1.8V Supply

Table 7: Analog Section Power Supply Pins

LQFP100	LQFP128	Name	Description
31	41	AVDD	Analog 1.8V Supply
35	45	AVDD	Analog 1.8V Supply
36	46	AVDD	Analog 1.8V Supply
40	50	AVDD	Analog 1.8V Supply
32	42	AGND	Analog Ground
37	47	AGND	Analog Ground
41	51	AGND	Analog Ground
42	52	AGND	Analog Ground
45	55	AVDD	Analog 1.8V Supply
46	58	XGND	Crystal Oscillator Ground
49	61	XVDD18	Crystal Oscillator 1.8V Supply
50	62	PGND	PLL Ground
51	63	PVDD18	PLL 1.8V Supply
52	64	PGND	PLL Ground

Table 8: Output Section Power Supply Pins (Sheet 1 of 2)

LQFP100	LQFP128	Name	Description
2	1	PLLVDD18	Output PLL 1.8V Supply
3	2	SGND	Output PLL Ground. Should be connected to Output Ground
4	3	OVDD18	Output Multiplexer 1.8V Supply
13	16	OVDD18	Output Multiplexer 1.8V Supply
14	17	VRH	LVDS/RSDS reference voltage. Connect to external capacitor to ground
15	18	VRL	LVDS/RSDS reference voltage. Connect to external capacitor to ground
	40	EPGND	Exposed Pad Ground. Connect to Output Ground
	56	EPGND	Exposed Pad Ground. Connect to Output Ground
	57	EPGND	Exposed Pad Ground. Connect to Output Ground
71		EPGND	Exposed Pad Ground. Connect to Output Ground
76	103	OVDD18	Output Multiplexer 1.8V Supply
87	115	VRL	LVDS/RSDS reference voltage. Connect to external capacitor to ground
88	114	VRH	LVDS/RSDS reference voltage. Connect to external capacitor to ground

Table 8: Output Section Power Supply Pins (Sheet 2 of 2)

LQFP100	LQFP128	Name	Description
89	116	OVDD18	Output Multiplexer 1.8V Supply
	91	OVDD18	Output Multiplexer 1.8V Supply
	89	VRL	LVDS/RSDS reference voltage. Connect to external capacitor to ground
	90	VRH	LVDS/RSDS reference voltage. Connect to external capacitor to ground
100	127	OVDD18	Output Multiplexer 1.8V Supply
1	128	PLLVDD18	Output PLL 1.8V Supply

4 Register Description by Block

4.1 Global Control (GLBL)

The Global Control block is responsible for:

- Selecting clock sources
- Power control
- I²C control
- Block by block synchronous reset generation.

The global control block runs in the crystal clock (XCLK) domain, which is required to be active for programming. In general for all ADE3800 blocks, I²C register access operates in the XCLK domain; exceptions are the internal RAMS which require the appropriate clock domain to be active (e.g. dotclk for OSD RAMs), refer to Table 44.

Table 9: Global Control Registers (Sheet 1 of 3)

Register Name	Addr	Mode	Bits	Rst	Description
GLBL_REV_ID	0000	R	[7:0]	0x83	REV_ID: Chip Revision ID
GLBL_CLK_SRC_SEL_0	0001	R/W	[6:4]	00	DOTCLK_SRC_SEL: DOTCLK source select 0: Crystal Clock 1: XCLK pin (test only) 2: FM freq synth half speed (1 ppc) [a] 3: FM freq synth full speed (2 ppc) [1] 4: SCLK frequency synthesizer 5-7: Reserved
			[2:0]		INCLK_SRC_SEL: input clock source select 0: Crystal Clock 1: XCLK pin (test only) **2: LLPLL phase controlled SRC (normal)** 3: LLPLL fixed phase clock (test only) 4: LLPLL control clock (test only) 5-7: Reserved
GLBL_CLK_SRC_SEL_1	0002	R/W	[6:4]	00	OUTCLK_SRC_SEL: panel output clock source select 0: Crystal Clock 1: XCLK pin (test only) 2: FM freq synth half speed (1 ppc) [b] 3: FM freq synth full speed (2 ppc) [1] 4: SCLK frequency synthesizer 5-7: Reserved
			[2:0]		SCLK_SRC_SEL: scaler clock source select 0: crystal clock 1: XCLK pin (test only) 2: FM freq synth half speed 3: FM freq synth full speed **4: Fixed freq synth (normal)** 5: LVDS pll output (test only) 6: LVDS pll input (test only) 7: Reserved

Table 9: Global Control Registers (Sheet 2 of 3)

Register Name	Addr	Mode	Bits	Rst	Description
GLBL_CLK_INV	0003	R/W	[4]	00	AFE_CLK_INV: invert ADC sample clock
			[3]		OUTCLK_INV: invert output clock
			[2]		SCLK_INV: invert SCLK
			[1]		DOTCLK_INV: invert DOTCLK
			[0]		INCLK_INV: invert INCLK
GLBL_CLK_ENAB_0	0004	R/W	[7]	FF	DOTCLK_FLK_EN: enable DOTCLK to the FLK block
			[6]		DOTCLK_OSD_EN: enable DOTCLK to the OSD block
			[5]		DOTCLK_PGEN_EN: enable DOTCLK to the PGEN block
			[4]		DOTCLK_EN: enable DOTCLK upstream of FLK, OSD, and PGEN enable
			[3]		INCLK_DFT_EN: enable INCLK to DFT test circuits
			[2]		INCLK_DMEAS_EN: enable INCLK to DMEAS block
			[1]		INCLK_EN: enable INCLK upstream of DMEAS and DFT enable
			[0]		ALL_VIDEO_CLK_EN: override block enable (FLK, OSD, PGEN, DFT, DMEAS) for test
GLBL_CLK_ENAB_1	0005	R/W	[1]	03	OUTCLK_EN: enable output clock
			[0]		SCLK_EN: enable scaler clock
GLBL_SRST_0	0006	R/W	[7]	00	TCON_SRST: reset the TCON block
			[6]		SCL_SRST: reset the SCALER block
			[5]		SMUX_SRST: reset the SMUX block
			[4]		DMEAS_SRST: reset the DMEAS block
			[3]		SMEAS_SRST: reset the SMEAS block
			[2]		SRT_SRST: reset the SRT block
			[1]		ADTH_SRST: reset the ADTH block
			[0]		ADC_SRST: reset the digital logic in the ADC block
GLBL_SRST_1	0007	R/W	[7]	00	DFT_SRST: reset DFT (test) circuits
			[6]		OMUX_SRST: reset the OMUX block
			[5]		APC_SRST: reset the APC block
			[3]		OSD_SRST: reset the OSD block
			[1]		PGEN_SRST: reset the PGEN block
			[0]		OSQ_SRST: reset the OSQ portion of the SCALER block
GLBL_I2C_CTRL	0008	R/W	[2]	00	I2C_AUTO_INC_OFF: disable I2C autoincrement
			[1]		I2C_SDA_PMOS_ON: SDA PMOS enable [c]
			[0]		BYPASS_I2C_FILTER: bypass antiglitch filter
GLBL_BPAD_EN	0009	R/W	[7:0]	03	Reserved
GLBL_COMP_CTRL	000A	R/W	[0]	01	COMPEN_EN: enable slew-rate compensation
GLBL_XTAL_CTRL	000B	R/W	[0]	01	I2C_MUXA_XTAL_EN: enable the crystal oscillator [d]
GLBL_TST_CTRL	000C	R/W	[7:0]	00	Reserved

Table 9: Global Control Registers (Sheet 3 of 3)

Register Name	Addr	Mode	Bits	Rst	Description
GLBL_AZWC_CTRL	000F	R/W	[7:2]	0	Reserved
			[1]	0	Auto Zero Window Control and Clamp synchronization 0: Synchronization on INCLK 1: Synchronization on DOTCLK
			[0]	0	Reserved
DFT_DEL_REF	0F0B	R	[7:0]		Returns chip speed and gate propagation delay (number of gates propagation per XCLK period)

a. Refer to OMUX_CTRL0[0] and also to Table 12.

b. Refer to OMUX_CTRL0[0] and also to Table 12.

c. If set, this bit puts the SDA output in push-pull mode (instead of open drain) to achieve higher I²C speed.

d. If reset, the device is put in shutdown mode (lowest possible power consumption) but can only exit from that mode with an external reset or a power on/off.

4.2 Frequency Synthesizer (FSYN)

The Frequency Synthesizer block generates the output clock, the dot clock and the scaler clock (SCLK). Frequency modulation, phase control, and pulse extension (duty cycle control) of the output clock are also provided.

For consistency and ease of use, both clocks are programmed by means of a single-parameter – the *phase rate* value derived from the desired frequency.

4.2.1 Dotclock vs Outclock

Dot clock (also known as DOTCLK or DCLK) is an internal clock; there are no associated I2C registers.

Out clock is the pixel clock that drives the LCD panel:

- When driving 2 pixels per clock, out clock and dot clock are identical
- When driving 1 pixel per clock the out clock frequency is half the dot clock frequency (phase rate is proportional to clock period which is the inverse of frequency).

Refer to Table 12: Clock Relationship.

Table 10: FSYN Frequency Synthesizer Registers (Sheet 1 of 2)

Register Name	Addr	Mode	Bits	Rst	Description
FSYN_CTRL	0850	R/W	[0]	00	frequency modulation 0*: off 1: on
FSYN_PR_OTCLK_0	0851	R/W	[7:0]	00	output clock phase rate = 2^21 * XCLK_FREQ / OUT_CLK_FREQ
FSYN_PR_OTCLK_1	0852	R/W	[7:0]	00	
FSYN_PR_OTCLK_2	0853	R/W	[5:0]	00	
FSYN_OFFSET	0854	R/W	[7:0]	00	RSDS clock-data skewcontrol (no meaning in LVDS) LSB = 289ps

Table 10: FSYN Frequency Synthesizer Registers (Sheet 2 of 2)

Register Name	Addr	Mode	Bits	Rst	Description
FSYN_FM_AMPLITUDE	0855	R/W	[7:0]	00	frequency modulation amplitude LSB = 4.5ps
FSYN_FM_PERIODX64	0856	R/W	[7:0]	80	frequency modulation period LSB = 1.184us
FSYN_PULSE_HIGH_EXT	0857	R/W	[7]	00	enable pulse extend 0*: disabled 1: enabled
		R/W	[2:0]		pulse extend value LSB = 0.3ns (typ)

Table 11: FSYN_PR_SK Registers

Register Name	Addr	Mode	Bits	Rst	Description
FSYN_PR_SK_0	0860	R/W	[7:0]	00	sclk phase rate = 2^15 * xclk_freq / sclk_freq Set sclk = 140MHz i.e. FSYN_PR_SK_1/0 = 18AFh @ xclk = 27MHz
FSYN_PR_SK_1	0861	R/W	[7:0]	00	

Table 12: Clock Relationship

	1 ppc	2 ppc
FSYN_OUTCLK_FREQ	2x DOTCLK_FREQ	DOTCLK_FREQ
DOTCLK SOURCE SEL	FSYN_OUTCLK_DIV2 (half speed)	FSYN_OUTCLK (full speed)
GLBL_CLK_SRC_SEL_0[6:4]	2	3
GLBL_CLK_SRC_SEL_1[6:4]	3	3
FSYN_PR_OTCLK	2^21 * XCLK_FREQ / 2x DOTCLK_FREQ	2^21 * XCLK_FREQ / DOTCLK_FREQ

4.3 Analog-to-Digital Converter (ADC)

The Analog-to-Digital block has the following features:

- Supports input clocks up to 140MHz (SXGA 75Hz)
- Adjustable analog amplifier bandwidth
- Differential RGB input path for noise immunity
- Built-in Sync-on-Green support
- Individual RGB clock delay control
- Power down control
- Linear and independent Gain/Offset adjustment.

GAIN CONTROL

Red, Green, and Blue channels have independent control registers: ANA_ADC_RED_0, ANA_ADC_GRN_0, and ANA_ADC_BLU_0, respectively.

8-bit control covers amplitudes from 0.35V (00) to 1.05V (FF) in steps of 2.74mV.

OFFSET CONTROL

Red, Green, and Blue channels have independent control registers: ANA_ADC_RED_1, ANA_ADC_GRN_1, and ANA_ADC_BLU_1, respectively.

6-bit control covers a range of ±92.8mV in steps of 2.9mV.

4.3.1 216MHz Frequency Synthesizer

The FS216 (controlled by the ANA_FS216_CTRL register) is the system PLL that drives the SCLK and DCLK frequency synthesizers (refer to Section 4.2: Frequency Synthesizer (FSYN)) and the LLK, by generating two different reference clock frequencies, 216=27x8 MHz (FSYN) and 54=27x2 MHz (LLK), based on XCLK.

For normal operation with a 27 MHz crystal, this register should be programmed to 0A.

The control register also allows for different crystal frequencies, power down, and optional use of an external PLL.

4.3.2 Sync-on-Green (SOG)

It is necessary to *tune* the analog SOG circuit in order to secure a valid HSync that can be used by the Line Lock PLL; the LLK may then be programmed to generate an in-clock. The ADC clamp relies on in-clock and may only be enabled once this step is complete. Clamp pulse is used to set the ADC black level reference voltage. In normal operation, the SOG signal is clamped by the ADC clamp, and this clamp is not available during the initial tuning. For the initial tuning phase, instead of the ADC clamp, the SOG clamp (pull down current) is used to clamp the input SOG signal. Once the tuning has been accomplished, and there is a valid reference HSync and in-clock, the SOG clamp may be disabled and the ADC clamp may be enabled.

There are therefore 2 states of sync-on-green operation: the initial state, which employs the SOG clamp, and the normal (or locked) state, which employs the ADC clamp.

4.3.2.1 Initial SOG Clamp State

At power up, set:

- ANA_ADC_SOG_1[0] = 0 (power down bit; apply power to SOG),
- ANA_ADC_SOG_1[3] = 1 (enable SOG clamp pull down current),
- ANA_ADC_GRN_2[1] = 1 (ADC clamp off; must be the same as ANA_ADC_SOG_1[3]),

and adjust ANA_ADC_SOG_0[4:0] & ANA_ADC_SOG_1[7:4] until one of the three comparators detects a SOG signal. Select a SOG signal to be the reference HSync to which the Line Lock PLL will lock.

The normal value of the pull down current is 1.1uA and can be adjusted with ANA_ADC_SOG_1[2:1]. Either ANA_ADC_SOG_1[0] = 1 or ANA_ADC_SOG_1[3] = 0 will turn off the pull down current.

The ADC clamp signal is generated in digital circuitry.

Figure 4: Initial SOG Clamp Phase

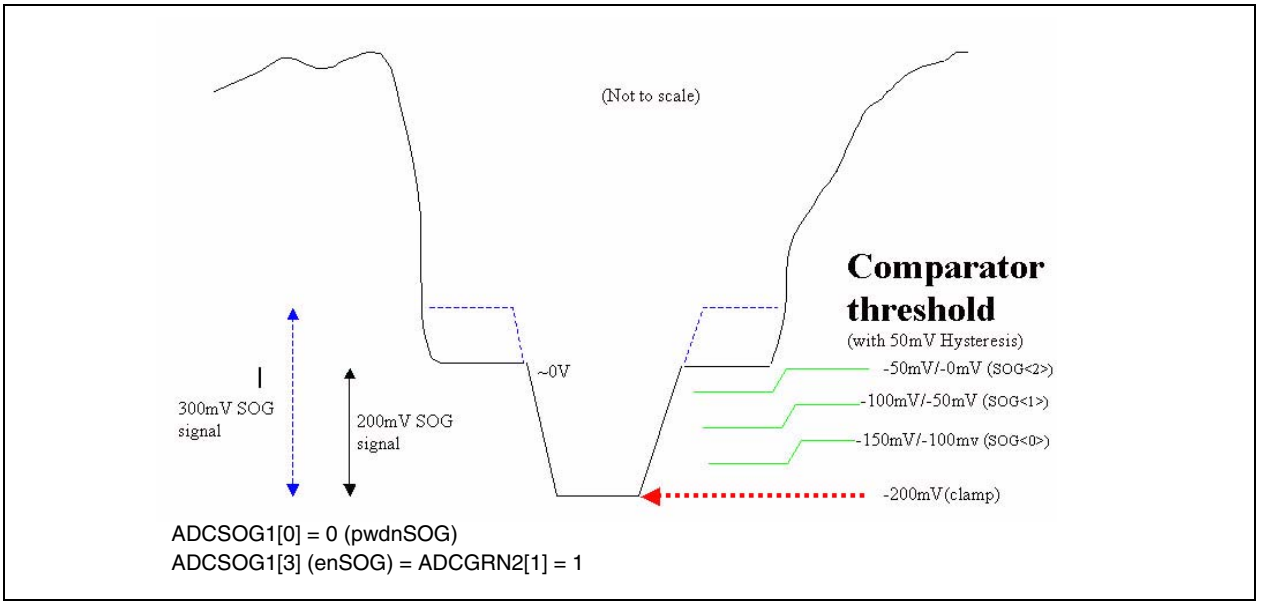

4.3.2.2 SOG Lock State

Set:

- ANA_ADC_SOG_1[0] remains 0,
- ANA_ADC_GRN_2[1] = 0 (ADC clamp on; must be the same as ANA_ADC_SOG_1[3]).
- ANA_ADC_SOG_1[3] = 0 (disable SOG clamp pull down current),

This enables the ADC Clamp circuit and disables the SOG Clamp (this is the recommended order – it is better to have overlap than no clamp at all). The comparators will continue to compare the input signal with the reference voltages and provide a correct SOG signal. Comparator threshold voltages can be adjusted to optimize noise immunity if necessary.

The ideal ADC clamp signal would be greater than 1us wide and placed precisely between the SOG pulse and video data. Any overlap or misalignment will alter the Green offset level internally and comparators may lose track of SOG signal.

Figure 5: SOG Lock Phase

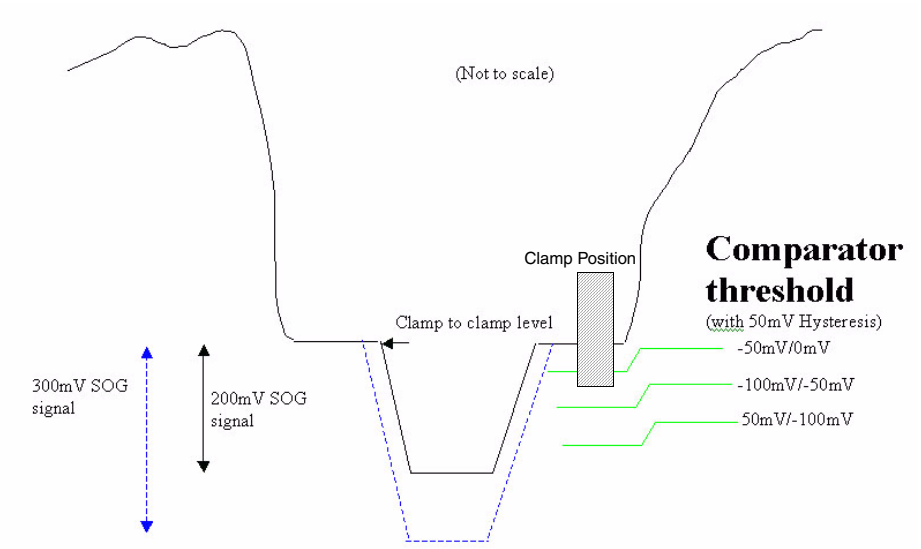

SOG output waveform has the same polarity as input
ADCSOG1[0] = 0 (pwdnSOG)
ADCSOG1[3] (enSOG) = ADCGRN2[1] = 0

Level Adjustment

All 3 comparator thresholds and clamp voltage are moved up or down together by changing registers. These cannot be individually adjusted.

- To shift up:
  - — Set ANA_ADC_SOG_1[7:4] = 0F
  - — Adjust ANA_ADC_SOG_0[4:0] to a higher value. (The default is 0, ~8.8mV per increment.)
- To shift down:
  - — Set ANA_ADC_SOG_0[4:0] = 0b00000
  - — Adjust ANA_ADC_SOG_1[7:4] to a lower value. (The default is 0F, ~10mV per decrement; a value of 00 is invalid.)

To power down SOG, set ANA_ADC_SOG_1[0] = 1.

Note: The SMEAS block can still detect SOG activity while the ADC is powered down.

There are three SOG analog voltage comparators that generate the SOG0, SOG1, and SOG2 digital signals. These signals are then sent to the LLK, SRT, SMEAS, and SMUX blocks.

For SOG support the SMEAS block has:

- Three 8-bit edge counters (used to detect activity)
- Four 4-bit delay counters (used to tune the comparator reference voltages)

The 4 delay counters measure the time (in XCLKs) between the leading and trail edges of the SOG signals, as follows:

d1: delay count from SOG[2] falling edge to SOG[1] falling edge

d2: delay count from SOG[1] falling edge to SOG[0] falling edge

d3: delay count from SOG[0] rising edge to SOG[1] rising edge

d4: delay count from SOG[1] rising edge to SOG[2] rising edge

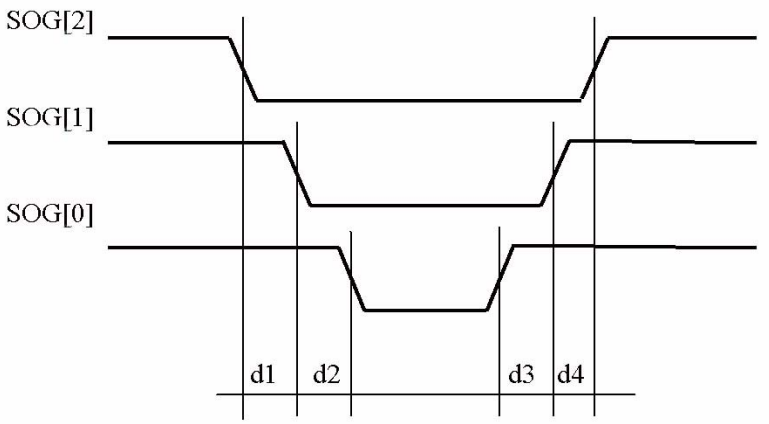

If there is no leading edge for a particular delay counter, the result is 0.

If both edges are within the same XCLK period, the result is 1.

When the counter reaches a value of 0F, it stops.

The delay and activity registers are used together to tune the SOG sampling level.

The delay measurements are controlled by the activity detection control registers which may be used to select either:

- One-shot: one sync pulse measurement; when done, hold result until next measurement is started; or
- Free-run: continuously measures, results are dynamically updated.

There are 8 possible cases as listed in the figure below.

The N is a whole number from 1 to E representing a stable delay. F/0 is a whole number between 0 and F representing a delay that varies in time (because Green data is being measured). 1 in the activity column means stable activity is detected, 0 means permanent no activity, and X indicates video dependence.

	Sample position	Comparators output Wave form	3 Active	Delay counters d1-d2-d3-d4
Case 0: A. ref. set too low; B. No sync tip; C. ref. set too high but no active video	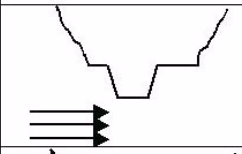	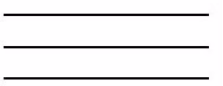	0-0-0	0-0-0-0
Case 1: 1 right 2 too low	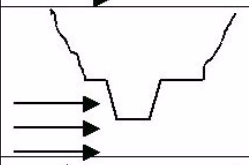	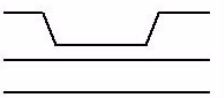	1-0-0	F-0-0-0
Case 2: 2 right 1 too low	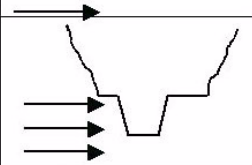	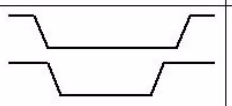	1-1-0	N-F-0-N
Case 3: All 3 inputs are sampled from right positions	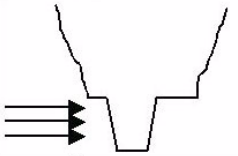	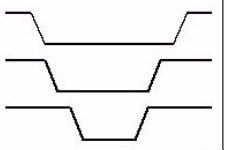	1-1-1	N-N-N-N
Case 4: 1 too high 2 right	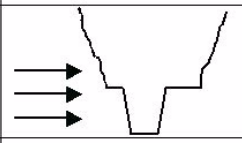	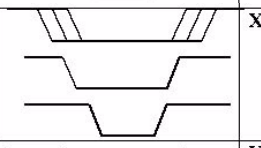	X-1-1	F/0-N-N-F
Case 5: 2 too high 1 right	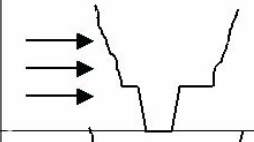	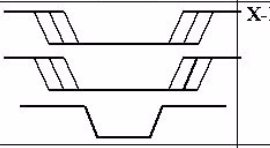	X-X-1	F/0-F/0-F-F/0
Case 6: all 3 too high	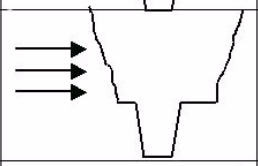	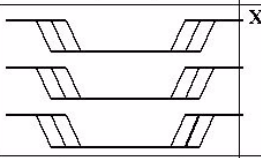	X-X-X	F/0-F/0-F/0-F/0 (distinguished from Case 3 with x/h & x/v measurements)
Case 7: Sync tip too small, only middle one right	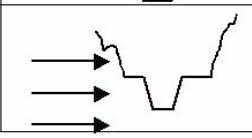	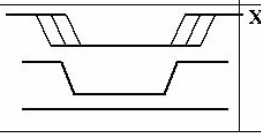	X-1-0	F/0-F-0-F

Table 13: ADC Registers (Sheet 1 of 2)

Register Name	Addr	Mode	Bits	Rst	Description
ANA_FS216_CTRL[a]	0040	R/W	[4:3]	01	xtal freq multiplier, ndiv 0: f_{xclk} = 54 MHz [b] 1*: f_{xclk} = 27 MHz (normal) [2] 2: f_{xclk} = 13.5 MHz [2] 3: reserved
			[2]		external pll **0*: internal** 1: external
			[1]		pll select 0*: disabled **1: enabled**
			[0]		disable FS216 analog VCO **0*: enabled** 1: disabled
ANA_ADC_PWDN	0050	R/W	[0]	01	AFE power control 0: on 1*: off
ANA_ADC_SOG_0	0051	R/W	[4:0]	00	SOG level detection & clamp Up when ADCSOG1[7:4]=1 0mV to +282mV, at ~8.8mV per step 00000*: 0mV 11111: +282mV
ANA_ADC_SOG_1	0052	R/W	[7:4]	01	SOG level detection & clamp Down when ANA_ADC_SOG_0[4:0]=0 0mV to -340mV, 10mV per step 0*: disabled 1: -340mV F: 0mV
			[3]		Enable SOG clamp & pull down current 0*: off 1: on
			[2:1]		SOG pull down current adjust MAX/TYP/MIN 00*: 1.4/1.1/0.8 uA 01: 0.7/0.5/0.4 uA 10: 5.3/4.1/3.1 uA 11: 2.7/2.1/1.6 uA
			[0]		SOG power control 0: on 1*: off

Table 13: ADC Registers (Sheet 2 of 2)

Register Name	Addr	Mode	Bits	Rst	Description
ANA_ADC_BIAS	0053	R/W	[5]	01	ADC Band gap power control **0*: on** 1: off
			[4:3]		IREF adjustment for internal bias, when ADCBIAS[2:1]=01 (or 11) 00*: 600uA 01: 750uA 10: 300uA 11: 450uA
			[2:1]		Must be set to 01
			[0]		ADC power control 0: on 1*: off
ANA_ADC_RED_0	0054	R/W	[7:0]	7F	GAIN CONTROL 2.74mV/step 00: 0.35V FF: 1.05V
ANA_ADC_RED_1	0055	R/W	[7]	0F	VREF **0*: internal** 1: external
			[5:0]		OFFSET CONTROL: 2.9mV/step
ANA_ADC_RED_2	0056	R/W	[6:4]	00	Channel Skew control LSB = 200ps(typ)
			[3:2]		Amp bandwidth adjust 00*: BW=250MHz (min) 01: BW=150MHz (min) 10: reserved 11: BW=40MHz (min)
			[1]		Clamp Control **0*: enabled** 1: disabled
			[0]		ADC Dithering (ADTH block) 0*: disabled **1: enabled**
ANA_ADC_GRN_0	0057	See ANA_ADC_RED_0.			
ANA_ADC_GRN_1	0058	See ANA_ADC_RED_1.			
ANA_ADC_GRN_2	0059	See ANA_ADC_RED_2.			
ANA_ADC_BLU_0	005A	See ANA_ADC_RED_0.			
ANA_ADC_BLU_1	005B	See ANA_ADC_RED_1.			
ANA_ADC_BLU_2	005C	See ANA_ADC_RED_2.			

a. Normal value for ANA_FS216_CTRL is 0Ah.

b. When xclk = 27MHz

4.4 Analog Dithering (ADTH)

The ADTH block generates a 3-bit dither pattern ADTH_OUT[2:0] to tune the 10-bit resolution of the ADC block.

Note: ADTH_OUT[2:0] is not a register but the generated 3-bit dither output of the ADTH block.

4.4.1 Function

The ADTH block consists of a 32x32x3 bit look up table (LUT). It represents one dither matrix, which can be read using a programmable addressing technique as well as a programmable output amplitude control. When ADTH_MAT_CTRL[0] is zero or during the clamp pulse ADTH_OUT[2:0] = 3. During vertical blanking ADTH_OUT[2:0] is set to ADTH_TEST_DITHER[2:0] to provide a feedback mechanism for calibration.

4.4.2 Addressing Technique

The ADTH block offers a programmable addressing technique to generate various temporal dither patterns. ADTH_FRAME_CTRL [7:4] is a 4-bit increment value, which defines the horizontal/vertical displacement of the dither matrix from frame to frame (precisely at rising edge of CLAMP_IN and at falling edge of VENAB).

After (ADTH_FRAME_CTRL [3:0] + 1) number of frames the horizontal/vertical displacement position will be reset to zero/zero, *only* when_ADTH_FRAME_CTRL [3:0]> 0.

Note: To set the frame accumulator to zero, program ADTH_FRAME_CTRL [7:4] to zero and program ADTH_FRAME_CTRL [3:0] to 1. ADTH_FRAME_CTRL [7:4] can be independently activated in the horizontal and vertical dimensions using ADTH_MAT_CTRL [2] and ADTH_MAT_CTRL [3], respectively.

4.4.3 Output Amplitude Control

The 3-bit LUT output value can be scaled to a reduced dither amplitude using ADTH_MAT_CTRL [5:4]. After adding the ADTH_MAT_CTRL [7:6] to the (reduced) dither amplitude the final 3-bit amplitude is output as ADTH_OUT[2:0].

4.4.4 Miscellaneous

During the ADC clamp pulse, the output of the ADTH block is muted; that is the output value is set to 3 (ADTH_OUT[2:0] = 3). In addition, ADTH_CLAMP_CTRL[7:4] delays the clamp pulse by 0 to 15 clock cycles while muting, and ADTH_CLAMP_CTRL[3:0] adds 0 to 15 clock cycles of muting after the falling edge of the clamp pulse.

For AFE dither calibration, ADTH_OUT[2:0] can be programmed via ADTH_TEST_DITHER to a static value during vertical blanking.

Table 14: ADTH Registers

Register Name	Addr	Mode	Bits	Rst	Description
ADTH_MAT_CTRL	03D0	R/W	[7:6]	01	amplitude_offset adth_out[2:0] = (dither_amplitude + amplitude_offset) % 8
			[5:4]		dither_amplitude 0*: dither amplitude range: 0-7 1: dither amplitude range: 0-6 2: dither amplitude range: 0-5 3: dither amplitude range: 0-4
			[3]		1: vertical start position of dither matrix changes by FRAME_OFFSET
			[2]		1: horizontal start position of dither matrix changes by FRAME_OFFSET
			[1]		Clamp polarity. To be set to 1.
			[0]		0: adth_out[2:0] = 3 1*: AFE dither amplitude enabled
ADTH_FRAME_CTRL	03D1	R/W	[7:4]	00	frame_offset Offset the start position of the dither matrix from frame to frame by frame_offset. See frame_len.
			[3:0]		frame_len Reset dither matrix start position after frame_len +1 number of frames when frame_len > 0. See frame_offset.
ADTH_CLAMP_CTRL	03D2	R/W	[7:4]	00	clamp_begin Delay and mute the clamp pulse by 0-15 clock cycles Note: adth_out[2:0] = 3 during clamping/muting
			[3:0]		clamp_end Mute after the end of clamp pulse for 0-15 clock cycles Note: adth_out[2:0] = 3 during clamping/muting
ADTH_TEST_DITHER	03D3	R/W	[2:0]	00	For AFE dither amplitude (voltage) calibration. During vertical blanking adth_out[2:0] = test_dither

4.5 Line Lock PLL (LLK)

The LLK generates the ADC input pixel sampling clock from an incoming HSync source and a multiplying factor (MFACTOR, aka Clock). The loop filter parameters and skew (aka Phase) can be tuned. The phase can be adjusted in steps of 72ps. The minimum LLK generated clock frequency is 13.5 MHz.

The PLL filter has two states with independent filter parameters: *Fast* and *Slow*. If while in the *Fast* state the phase detector error count remains below a programmable threshold (`LLK_LOCK_TOL`) for a programmable number of input lines (`LLK_LOCK_LINE_NB`), the PLL changes to the *Slow* state. While in this state, the *Slow* filter coefficients apply. In the event that phase detector errors should exceed `LLK_LOCK_TOL` for one or more lines, the PLL returns to the *Fast* state in one line, and *Fast* filter coefficients again apply.

The digital loop filter is controlled by two parameters: A and B. The A and B parameters control the response of the 2nd order digital filter. A and B are exponential coefficients. The relationship of these numbers to the classic 2nd order damping and natural frequency are as follows:

- Damping = 2^(AE-8) * SQRT(5 * MFACTOR / (2^(BE+4)))
- Natural Frequency = SQRT(MFACTOR * 5 * 2^(BE-30))

Note: Typical value for the A and B parameters is 66h.

The synthesized HSync supplied to SMUX is 50% duty cycle.

Table 15: Line Lock PLL Registers (Sheet 1 of 2)

Register Name	Addr	Mode	Bits	Rst	Description
LLK_CTRL	0800	R/W	[6]	00	0*: use slow filter when coarse error is zero 1: use slow filter when lock condition is achieved
		R/W	[5]		mfactor shadow control 0*: simple shadow. Apply new mfactor when mfactor_u is written. 1: shadow transfer on in_venab falling edge.
		R/W	[4]		0*: lock to rising edge of input HSync 1: lock to falling edge of input HSync
		R/W	[3:1]		input HSync select 0*: HSYNC pin 1: SOG0 2: SOG1 3: SOG2 4: EXT_SOG
		R/W	[0]		LLK pll free run enable
LLK_SYNC_OFFSET_MODE	0801	R/W	[3]	06	manual resync mode The LLK pll requires a resync after any change of mfactor or offset. Writing to this bit causes a one-time resync of the PLL accumulator (cleared by H/W).
		R/W	[2]		resync every frame mode[a]
		R/W	[1]		resync on in_venab falling edge[1]
		R/W	[0]		resync on in_venab rising edge[1]
LLK_MFACTOR_L	0802	R/W	[7:0]	80	mfactor[7:0] = in_htotal
LLK_MFACTOR_U	0803	R/W	[3:0]	02	mfactor[11:8]
LLK_PHASE_RATE_INIT	0804	R/W	[7:0]	80	pll phase rate init freq = xclk_freq * 128 / phase_rate_init.
LLK_TC_AEF	0805	R/W	[3:0]	0A	time constant A when out of lock
LLK_TC_BEF	0806	R/W	[3:0]	0A	time constant B when out of lock
LLK_TC_AES	0807	R/W	[3:0]	06	time constant A when in lock
LLK_TC_BES	0808	R/W	[3:0]	06	time constant B when in lock
LLK_LOCK_TOL	0809	R/W	[7:0]	20	error limit for determining lock. LSB = 150ps (typ)
LLK_LOCK_LINE_NB	080A	R/W	[7:0]	30	line count for determining lock. - set when error is < lock_tol for lock_line_nb of lines. - cleared if error exceeds lock_tol.

Table 15: Line Lock PLL Registers (Sheet 2 of 2)

Register Name	Addr	Mode	Bits	Rst	Description
LLK_OFFSET_L	080B	R/W	[7:0]	00	phase offset [7:0] of adc sample clock. LSB is xclk_period/512 = 72ps.
LLK_OFFSET_U	080C	R/W	[1:0]	00	phase offset
LLK_PULSE_HIGH_EXT	080D	R/W	[7]	00	inclk pulse extend enable
		R/W	[2:0]		inclk pulse extend value. LSB = 0.3ns (typ)
LLK_PHASE_RATE_MIN	080E	R/W	[7:0]	14	phase rate minimum. Sets the upper frequency limit of the PLL. phase_rate_min = xclk_freq * 128 / max_inclk_freq.
LLK_STAT_LINE_NB_L	080F	R/W	[7:0]	40	number of lines over which statistics are gathered
LLK_STAT_LINE_NB_U	0810	R/W	[7:0]	00	number of lines over which statistics are gathered
LLK_STAT_SUM_ABS_MAX_L	0811	R/W	[7:0]	60	limit for sum of absolute errors
LLK_STAT_SUM_ABS_MAX_U	0812	R/W	[7:0]	00	
LLK_STAT_MAX_ABS_MAX	0813	R/W	[7:0]	04	limit for absolute error
LLK_DEADZONE	0814	R/W	[3:0]	02	coarse error deadzone, normal operation = 2.
LLK_STATUS	0830	R	[4]	00	max absolute error exceeded limit, not sticky
		R	[3]		sum of absolute errors exceeded limit, not sticky
		R	[2]		pll filter overflow condition, not sticky
		R	[1]		coarse error is zero status, not sticky
		R	[0]		lock status, not sticky
LLK_STATUS_PHASE_RATE_I_0	0831	R	[7:0]	00	pll phase rate, free running readout.[b]
LLK_STATUS_PHASE_RATE_I_1	0832	R/W	[7:0]	00	
LLK_STATUS_PHASE_RATE_I_2	0833	R/W	[7:0]	00	
LLK_STATUS_PHASE_RATE_I_3	0834	R/W	[5:0]	00	
LLK_STATUS_SUM_ABS_L	0835	R	[7:0]	00	sum of absolute errors readout
LLK_STATUS_SUM_ABS_U	0836	R	[7:0]	00	
LLK_STATUS_MAX_ABS	0837	R	[7:0]	00	max absolute error readout
LLK_MFACTOR_HW_L	0842	R	[7:0]	80	mfactor shadow hw readout
LLK_MFACTOR_HW_U	0843	R	[7:0]	02	
LLK_TEST	084F	R/W	[7:0]	00	reserved

a. recommended setting for bits [2:0] = 110b

b. phase rate period (in picoseconds) is:

$$haseRate(ps) = \frac{LlkStatusPhaseRate[28..0] \times 2^{-21} \times XTALperiod(ps}{128}$$

Example:

LLK_STATUS_PHASE_RATE_I_[28:0] = 03335BDF , XTAL = 27 MHz

phase rate period = 7.409 ns

frequency = 134.97 MHz

4.6 Sync Retiming (SRT)

The Sync Retiming block retimes synchronization signals (e.g. HSync and VSync) into either the XCLK or in-clock domains.

SRT provides the following:

- Retimes all sync signals going to SMEAS into the xclk domain
- Extracts vertical sync from composite sync signals
- Divides sclk by up to 1024 for activity detection purposes (SMEAS)
- Generates a delayed version of vertical sync from a mux-selectable vertical sync source
- Generates a coast signal in the xclk domain for the LLPLL
- Measures the effect of the filter on marginal composite sync signals and returns a bad_filter flag
- Retimes horizontal and vertical syncs into the inclk domain.

4.6.1 Coast Signal

In composite or SOG sync mode, HSYNC pulses may not exist during the VSYNC pulse signal and will cause the LLK to unlock and loose track of HSYNC signal. Coarse signal (also known as LLK Inhibit/Free Run signal) is used to generate a vertical pulse that wraps around the incoming VSYNC.

Coast pulse reference (0) is either edge of VSYNC, and its set and reset values are expressed in XCLK units.

Figure 6: Vertical sync extraction and filtering

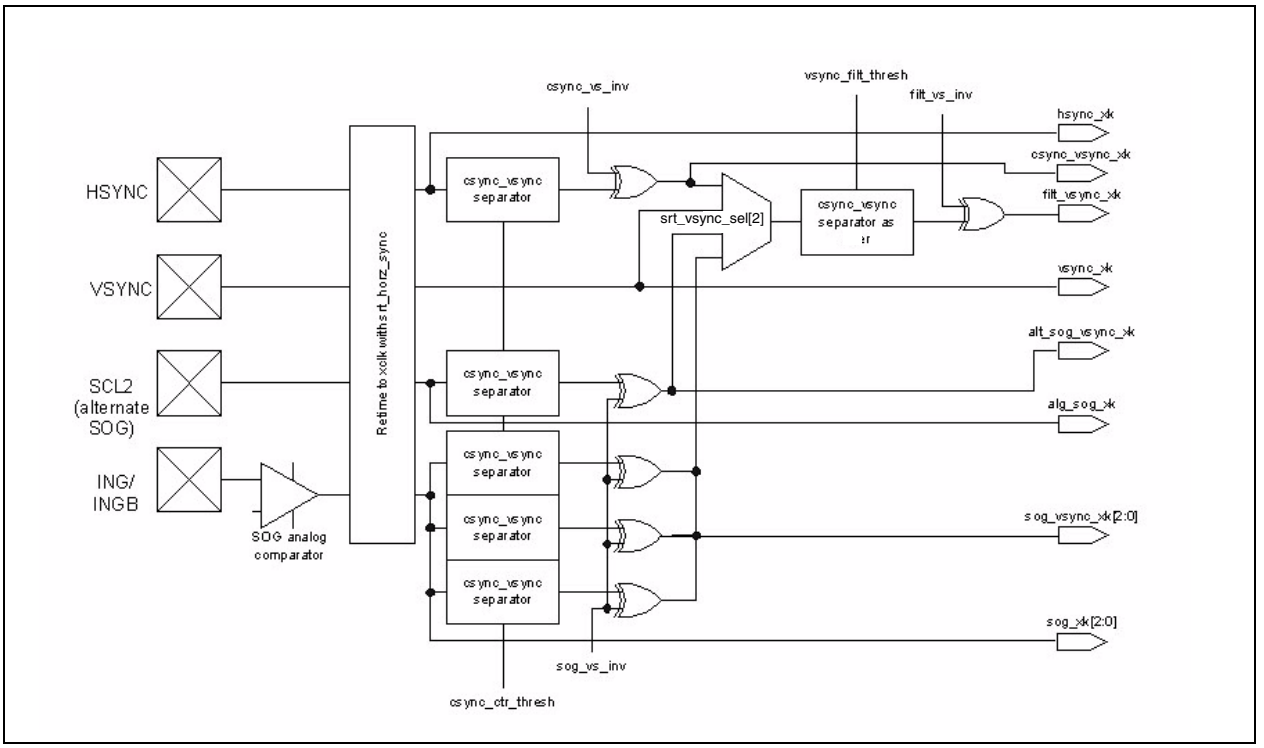

Table 16: Sync Retiming Registers (Sheet 1 of 2)

Register Name	Addr	Mode	Bits	Rst	Description
SRT_CSYNC_INV	01E0	R/W	[2]	00	invert vert sync signal extracted from internal SOG comparator (sog_vs_inv)
		R/W			
		R/W	[1]		invert vert sync extracted from composite sync signal on HSync pin (csync_vs_inv)
		R/W	[0]		invert filtered vert sync (filt_vs_inv)
SRT_CSYNC_THR_L	01E1	R/W	[7:0]	80	composite sync vertical sync extractor threshold (this is the narrowest HSync signal sent +50% as a safety margin) refer to Figure 7
SRT_CSYNC_THR_U	01E2	R/W	[3:0]	00	
SRT_VSYNC_SEL	01E3	R/W	[2:0]	00	filtered vert sync source select 0*: VSYNC pin 1: vsync from composite HSYNC pin 2: vsync from composite SOG[0] comparator 3: vsync from composite SOG[1] comparator 4: vsync from composite SOG[2] comparator 5: vsync from alternate SOG source 6 - 7: Reserved
SRT_VSYNC_THR_L	01E4	R/W	[7:0]	80	filtered vert sync delay
SRT_VSYNC_THR_U	01E5	R/W	[3:0]	00	
SRT_COAST_VS_SEL	01E6	R/W	[3]	00	coast signal trigger edge 0*: rising edge of selected VSync 1: falling edge of selected VSync
		R/W	[2:0]		source selection for coast VSync trigger 0*: VSYNC pin 1: vsync from composite HSYNC pin 2: vsync from composite SOG[0] comparator 3: vsync from composite SOG[1] comparator 4: vsync from composite SOG[2] comparator **5: filtered and delayed vsync (normal)** 6: vsync from alternate SOG source 7: Reserved
SRT_COAST_RISE_L	01E7	R/W	[7:0]	00	rising edge of coast, in XCLKs from vsync trigger
SRT_COAST_RISE_M	01E8	R/W	[7:0]	00	
SRT_COAST_RISE_U	01E9	R/W	[7:0]	00	
SRT_COAST_FALL_L	01EA	R/W	[7:0]	00	falling edge of coast, in XCLKs from vsync trigger
SRT_COAST_FALL_M	01EB	R/W	[7:0]	00	
SRT_COAST_FALL_U	01EC	R/W	[7:0]	00	
SRT_HS_CTRL	01EE	R/W	[4]	00	Edge of inclk on which to sample horizontal sync: 0*: rising edge **1: falling edge (normal)**
		R/W	[2:0]		HSync Sample Selection for SMUX 0*: reserved **1: llk_HSync (normal)** 2: SOG0 3: SOG1 4: SOG2 5: EXT_SOG

Table 16: Sync Retiming Registers (Sheet 2 of 2)

Register Name	Addr	Mode	Bits	Rst	Description
SRT_VS_SEL	01EF		[5:4]	00	sclk div prescaler for SMEAS: 0*: 128 1: 256 2: 512 3: 1024
		R	[3]		Bad csync threshold. Change SRT_CSYNC_THR until this is stable low.
		R/W	[2:0]		vert sync source select for re-sampling into inclk domain for SMUX: 0*: VSYNC pin 1: vsync from composite HSYNC pin 2: vsync from composite SOG[0] comparator 3: vsync from composite SOG[1] comparator 4: vsync from composite SOG[2] comparator **5: filtered and delayed vsync (normal)** 6: vsync from alt SOG source pin 7: reserved
SRT_COAST_RISE_HW_L	01F0	R	[7:0]		Shadow read back
SRT_COAST_RISE_HW_M	01F1	R	[7:0]		
SRT_COAST_RISE_HW_U	01F2	R	[7:0]		
SRT_COAST_FALL_HW_L	01F3	R	[7:0]		
SRT_COAST_FALL_HW_M	01F4	R	[7:0]		
SRT_COAST_FALL_HW_U	01F5	R	[7:0]		

Note: All thresholds are in XCLK units.

Figure 7: VSync Up/Down Counter

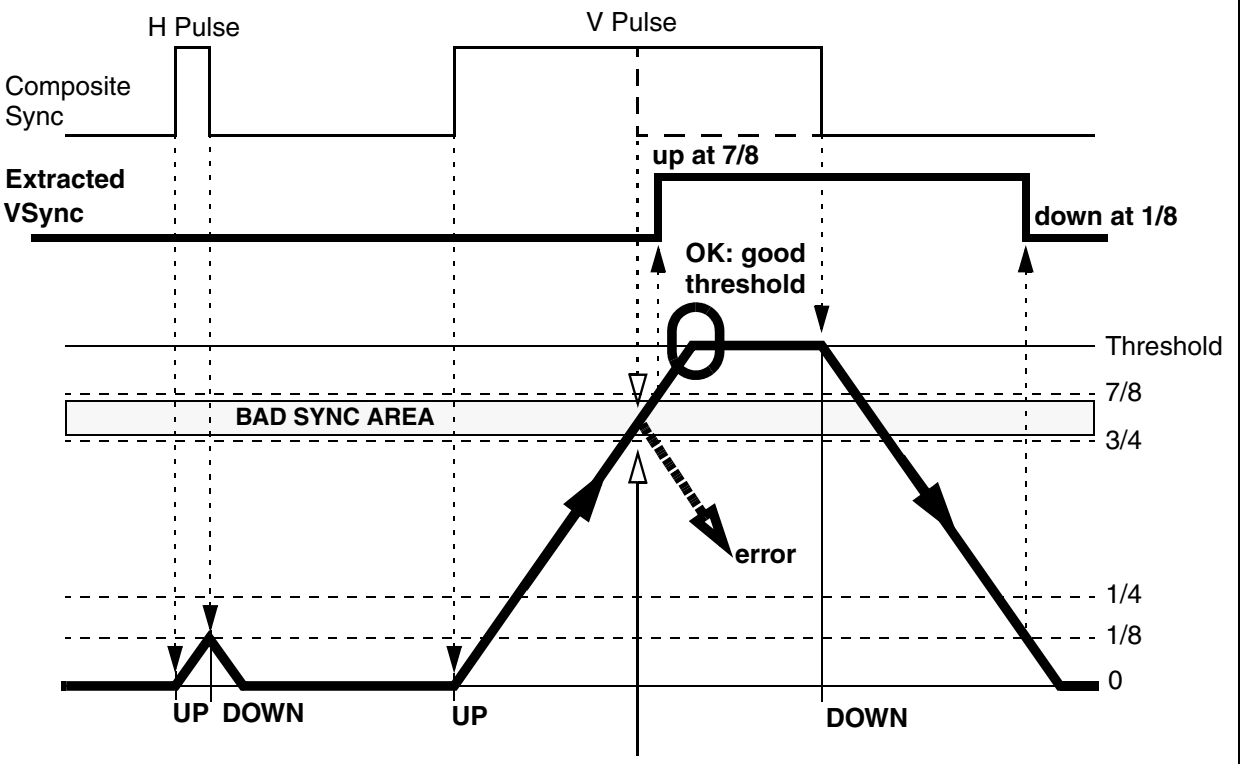

if V Pulse width was too short for the chosen threshold (counter reaches 3/4th but goes down before 7/8th is reached): Bad sync bit SRT_VS_SEL[3] would be set

4.7 Input Sync Measurement (SMEAS)

The SMEAS block monitors input activity and measures input sync signals from all sources. All unused and reserved bits return as zero. SMEAS operates in the crystal clock (xclk) domain.

Input Sync Functions:

- Activity Detection: detects input activity
- Measurement: measures sync period and width

4.7.1 Input Sync - Activity Detection

The activity block measures all sync sources in parallel. An active channel is defined as having a programmable number of rising edges within a programmable number of xclk cycles (= sample period). Activity limits are set per channel class: clkdiv1k and HSync; vsync. The activity results are updated each sample period.

Software can select either:

- One shot: one time measurement
- Free Run: continuously running measurements

4.7.2 Input Sync - Measurement

One set of (HSync, vsync) can be selected for measurement.

Software can request measurements in one of two ways:

- **One shot** – one time measurement
- **Free Run** – continuously running measurements.

The measurement block also compares the measured sync signals to programmable limits.

- Xclks per vsync different by more than +/- 2^(xclk_vtol_exp[3:0])
- Xclks per HSync different by more than +/- 2^(xclk_htol_exp[3:0])
- HSyncs per vsync different by more than +/- HSync_vtol[3:0]
- polarity.

Range check flags will be set when the measurements exceed the programmed tolerances. The flags will be updated on the completion of each measurement in **Free Run** mode. The flags maintain their state at the completion of a measurement while in **One Shot** mode. When a measurement is started (asserting the Measurement Start bit) the range check flags are cleared.

There are timeout registers to detect the absence of sync signals.

The measurement block registers are grouped into four main categories:

- Timeouts & Tolerances
- Measurements (obtained by a one-shot or free-run mode of operation)
- Reference values
- Flags (indicators that measurements have timed out or measurements compared to reference values exceed tolerances).

4.7.3 Fast Mute

The fast mute block continuously monitors one selected HSync signal and compares its period with an independent reference value and tolerance. A fast mute flag is set as soon as the measured period is outside the tolerance for more than 1, 2 or 3 times in a row.

The fastmute range check flag can be combined with other reference checking flags with a mask-or function to make a sticky bit to mute the screen rapidly in the event of a mode change or dropped signal.

Note: Timeout and Tolerance use Horizontal and Vertical measurements. These can either be the Horizontal or Vertical syncs from an Analog input or the local generated Horizontal Enable and/or Vertical Enable.

Table 17: SMEAS Register Definitions (Sheet 1 of 6)

Register Name	Addr	Mode	Bits	Rst	Description
SMEAS_ACT_CTRL	0100	R/W	[3]	00	Free-run enable
		R/W	[2]		Freeze results during free run mode. No meaning in one shot mode. 0*: Do not freeze. New result will be available on the next and subsequent toggle of the polling bit. 1: Freeze the current results. The polling bit will still toggle and the block continues to free run; however, results will not update.
		R/W	[1]		Activity detection start. In one-shot mode setting this bit triggers the start of a measurement. This bit is reset to zero when the measurement is complete. No meaning in free run mode.
		R/W	[0]		Activity detection mode. 0*: free-run mode 1: one-shot mode
SMEAS_ACT_H_SMPTM_L	0101	R/W	[7:0]	00	Sample period value for clock or HSync activity. Xclks [7:0]
SMEAS_ACT_H_SMPTM_U	0102	R/W	[7:0]	00	Sample period value for clock or HSync activity. Xclks [15:8]
SMEAS_ACT_V_SMPTM_L	0103	R/W	[7:0]	00	Sample period value for vsync activity. Xclks / 256 [7:0]
SMEAS_ACT_V_SMPTM_U	0104	R/W	[7:0]	00	Sample period value for vsync activity. Xclks / 256 [15:8]
SMEAS_ACT_H_MINEDGE	0105	R/W	[7:0]	00	Minimum edge count value for clk or HSync activity.
SMEAS_ACT_V_MINEDGE	0106	R/W	[7:0]	00	Minimum edge count value for vsync activity.
SMEAS_H_TMOT_L	0107	R/W	[7:0]	00	Timeout counter value for clk or horizontal measurement. xclks [7:0]
SMEAS_H_TMOT_U	0108	R/W	[7:0]	00	Timeout counter value for clk or horizontal measurement. xclks [15:8]
SMEAS_V_TMOT_L	0109	R/W	[7:0]	00	Timeout counter value for vertical measurement. xclks / 256 [7:0]
SMEAS_V_TMOT_U	010A	R/W	[7:0]	00	Timeout counter value for vertical measurement. xclks / 256 [15:8]
SMEAS_CLEAR	0110	R/W	[1]	00	clears SMEAS_STATUS_RANGE[7] sticky bit only. Must be reset by software.
			[0]		clears timeouts, measurements. Must be reset by software.

Table 17: SMEAS Register Definitions (Sheet 2 of 6)

Register Name	Addr	Mode	Bits	Rst	Description
SMEAS_H_CTRL	0111	R/W	[5]	00	Measures HSync in the condition of no VSync
		R/W	[4]		Free-run enable
		R/W	[3]		Edge measurement selection for horizontal period events. **0*: rising edge.** 1: negative edge.
		R/W	[2]		Freeze results during free run mode. No meaning in one shot mode. 0*: Do not freeze the results in free run mode. New results will be available on the next and subsequent toggle of the polling bit. 1: Freeze the current results in free run mode. The polling bit will still toggle and the block continues to free run; however, results will not update.
		R/W	[1]		In free-run mode it enables measurements. In one-shot mode it triggers the start of a measurement and is reset to zero when the measurement is complete.
		R/W	[0]		0*: free-run mode. 1: one-shot mode.
SMEAS_V_CTRL	0112	R/W	[4]	00	Free-run enable
		R/W	[3]		Edge measurement selection for vertical period events. **0*: rising edge.** 1: negative edge.
		R/W	[2]		Freeze results during free run mode. No meaning in one shot mode. 0*: Do not freeze the results in free run mode. New result will be available on the next and subsequent toggle of the polling bit. 1: Freeze the current results in free run mode. The polling bit will still toggle and the block continues to free run; however, results will not update.
		R/W	[1]		In free-run mode it enables measurements. In one-shot mode it triggers the start of a measurement and is reset to zero when the measurement is complete.
		R/W	[0]		0*: free-run mode. 1: one-shot mode.

Table 17: SMEAS Register Definitions (Sheet 3 of 6)

Register Name	Addr	Mode	Bits	Rst	Description
SMEAS_H_SEL	0113	R/W	[6:4]	00	Fastmute input select 0*: HSync 1: HSync generated from LLK 2: EXT_SOG 3: SOG[0] 4: SOG[1] 5: SOG[2] 6,7: reserved
		R/W	[3:0]		H measurement input select 0*: HSync 1: HSync generated from LLK 2: EXT_SOG 3: SOG[0] 4: SOG[1] 5: SOG[2] 6-A: reserved B: inclk / 1024 (for test only) C: dotclk / 1024 (for test only) D: TCON enab (for test only) E: TCON HSync (for test only) F: sclk_div (for test only)
SMEAS_V_SEL	0114	R/W	[7:4]	00	Vertical high level duration measurement input select 0*: VSYNC pin 1: extracted Vsync from HSYNC pin composite sync 2: extracted Vsync from EXT_SOG composite sync 3: filtered vsync from SRT block (normal condition) 4: SOG[0] extracted vsync 5: SOG[1] extracted vsync 6: SOG[2] extracted vsync 7-F: reserved
		R/W	[3:0]		V measurement input select 0*: VSYNC pin 1: extracted Vsync from HSYNC pin composite sync 2: extracted Vsync from EXT_SOG composite sync 3: filtered vsync from SRT block (normal condition) 4: SOG[0] extracted vsync 5: SOG[1] extracted vsync 6: SOG[2] extracted vsync 7-F: reserved

Table 17: SMEAS Register Definitions (Sheet 4 of 6)

Register Name	Addr	Mode	Bits	Rst	Description
SMEAS_STATUS_MASK[a]	0119	R/W	[7]	00	Enable mute function to respond to SMEAS_STATUS_RANGE[6] (hpol).
		R/W	[6]		Enable mute function to respond to SMEAS_STATUS_RANGE[5] (vpol).
		R/W	[4]		Enable mute function to respond to SMEAS_STATUS_RANGE[4] (fastmute).
		R/W	[3]		Enable mute function to respond to SMEAS_STATUS_RANGE[3] (xpervhi).
		R/W	[2]		Enable mute function to respond to SMEAS_STATUS_RANGE[2] (hperv).
		R/W	[1]		Enable mute function to respond to SMEAS_STATUS_RANGE[1] (xperh).
		R/W	[0]		Enable mute function to respond to SMEAS_STATUS_RANGE[0] (xperv).
SMEAS_H_NUM_LINES	011A	R/W	[7:0]	00	Number of lines to measure for Horizontal period per Xclks, actual value = programmed value +1. Range 1 – 256. Provides for a more accurate measurement.
SMEAS_H_SKIP_L	011B	R/W	[7:0]	00	Number of horizontal reference edges to skip from selected vertical reference edge before starting horizontal measurement.
SMEAS_H_SKIP_U	011C	R/W	[3:0]	00	
SMEAS_HV_SKEW[b]	011D	R	[7:0]		Returns the minimum number of xclks between edges of the selected hsync and vsync. Does not care about polarity. Free running, updates once per frame.
SMEAS_XK_HTOL_EXP	012C	R/W	[3:0]	00	Horizontal tolerance value. +/- 2^n xclks, n=[0..15]
SMEAS_XK_VTOL_EXP	012D	R/W	[3:0]	00	Vertical tolerance value. +/- 2^n xclks, xk_v_high counter use this tolerance value as well. n=[0..15]
SMEAS_HSYNC_VTOL	012E	R/W	[3:0]	00	Horizontal per Vertical tolerance value. +/-n H(rising,falling) per V(rising,falling)
SMEAS_FASTMU_CTRL	0130	R/W	[6:5]	00	fastmute coast **0*: llk coast (normal)** 1: inverted venab 2, 3: no coast (always active)
		R/W	[2:1]		error count 0*: first error sets fastmute flag 1: two errors in a row needed to set fastmute 2: three errors in a row needed to set fastmute 3: reserved
		R/W	[0]		fastmute enable
SMEAS_POL	0131	R	[1]		Horizontal polarity 0: active low (-), 1 = active high (+)
		R	[0]		Vertical polarity 0: active low (-), 1 = active high (+)
SMEAS_FASTMU_TOL	0134	R/W	[3:0]	00	Tolerance for fast mute check +/-n xclks, n=[0..15]

Table 17: SMEAS Register Definitions (Sheet 5 of 6)

Register Name	Addr	Mode	Bits	Rst	Description
SMEAS_STATUS_MASK2	0135	R/W	[1]	00	Enable mute function to respond to SMEAS_STATUS_RANGE2[1].
		R/W	[0]		Enable mute function to respond to SMEAS_STATUS_RANGE2[0].
SMEAS_ACT_POLLING	013F	R	[0]	00	Activity detection polling bit. Toggles when new results are ready in free-run. Undefined in one-shot mode.
SMEAS_ANA_ACT	0140	R	[7]	00	SOG2 is active
		R	[6]		SOG1 is active
		R	[5]		SOG0 is active
		R	[4]		EXT_SOG pin is active
		R	[3]		Comp vsync from EXT_SOG pin is active
		R	[2]		Comp vsync from HSYNC pin is active
		R	[1]		HSYNC pin is active
		R	[0]		VSYNC pin is active
SMEAS_SOG_DLY12	0141	R	[7:4]	00	d2: delay in xclks between SOG1 & SOG2 falling edges
		R	[3:0]		d1: delay in xclks between SOG0 & SOG1 falling edges
SMEAS_SOG_DLY34	0142	R	[7:4]	00	d4: delay in xclks between SOG1 & SOG0 rising edges
		R	[3:0]		d3: delay in xclks between SOG2 & SOG1 rising edges
SMEAS_ANA_STUCK	0143	R	[4]	00	EXT_SOG is stuck at 1(high)/0(low)
		R	[3]		Comp vsync from EXT_SOG is stuck at 1(high)/0(low)
		R	[2]		Comp vsync from HSYNC pin is stuck at 1(high)/0(low)
		R	[1]		HSYNC pin is stuck at 1(high)/0(low)
		R	[0]		VSYNC pin is stuck at 1(high)/0(low)
SMEAS_XK_PER_H_L	0146	R	[7:0]	00	Xclks per Horizontal [7:0] (result = actual - 2)
SMEAS_XK_PER_H_M	0147	R	[7:0]	00	Xclks per Horizontal [15:8]
SMEAS_XK_PER_H_U	0148	R	[7:0]	00	Xclks per Horizontal [23:16]
SMEAS_XK_PER_V_L	0149	R	[7:0]	00	Xclks per Vertical [7:0]
SMEAS_XK_PER_V_M	014A	R	[7:0]	00	Xclks per Vertical [15:8]
SMEAS_XK_PER_V_U	014B	R	[7:0]	00	Xclks per Vertical [23:16]
SMEAS_H_PER_V_L	014C	R	[7:0]	00	Horizontal per Vertical [7:0]
SMEAS_H_PER_V_U	014D	R	[7:0]	00	Horizontal per Vertical [15:8]
SMEAS_XK_V_HI_L	014E	R	[7:0]	00	Xclks per V high
SMEAS_XK_V_HI_M	014F	R	[7:0]	00	
SMEAS_XK_V_HI_U	0150	R	[7:0]	00	
SMEAS_REF_FASTMU_L	0132	R/W	[7:0]	00	Fastmute reference, xclks per hsync, one line only
SMEAS_REF_FASTMU_U	0133	R/W	[3:0]	00	
SMEAS_STATUS_TMOT	0151	R	[1]	00	Indicates that the horizontal measurement timed out. Can only be cleared by sync reset or smeas all_clear.
		R	[0]		Indicates that the vertical measurement timed out. Can only be cleared by sync reset or smeas all_clear.

Table 17: SMEAS Register Definitions (Sheet 6 of 6)

Register Name	Addr	Mode	Bits	Rst	Description
SMEAS_STATUS_RANGE	0152	R	[7]	00	The meas_sticky_status bit is an OR of the STATUS_MASK bits ANDed with their corresponding non-sticky range status flags. This bit is sticky and can only be cleared by a write to SMEAS_CLEAR[1]. The sticky bit goes to the scaler as a signal to blank the output screen.
		R	[6]		Indicates that the hpol measurement does not currently equal the reference value. Not sticky.
		R	[5]		Indicates that the vpol measurement does not currently equal the reference value. Not sticky.
		R	[4]		Indicates that the fastmute measurement is currently exceeding the ref+tol. Not sticky.
		R	[3]		Indicates that the xclks per vhi measurement is currently exceeding the ref+tol. Not sticky.
		R	[2]		Indicates that the horizontal per vertical measurement is currently exceeding the ref+tol. Not sticky.
		R	[1]		Indicates that the xclks per horizontal measurement is currently exceeding the ref+tol. Not sticky.
		R	[0]		Indicates that the xclks per vertical measurement is currently exceeding the ref+tol. Not sticky.
SMEAS_MEAS_POLLING	0153	R	[1]	00	Horizontal measurement polling bit. Toggles upon completion of each measurement in free-run mode while SMEAS_H_CTRL[1] = 1. Undefined in one-shot mode.
		R	[0]		Vertical measurement polling bit. Toggles upon completion of each measurement in free-run mode while SMEAS_V_CTRL[1] = 1. Undefined in one-shot mode.
SMEAS_STATUS_RANGE2	0155	R	[1]		indicates the current state of the line buffer pointer crossing error check in the scaler.
		R	[0]		indicates the current state of the output sequencer trigger-out-of-range error check

a. The Mask can apply in any mode of operation, it does not need to only apply to the Sticky bit setting.

b. Adjust VSYNC delay and/or filtering in the SRT block to achieve an hv_skew >= 6 to prevent vsync jitter sensitivity in the SMUX and SMEAS blocks.

4.8 Sync Multiplexer (SMUX)

The SMUX block provides the ability to:

- Clamp (ADC Black level capture) pulse generation.
- Generate Data Enable from incoming HSync/Vsync signals.
- Select which sync source is used as internal reference.

Vertical enable (venab) and clamp are always generated.

Synthesized signals are generated relative to the *reference signal* and *selected edge*.

Clean picture position wrap around is supported in both horizontal and vertical directions (+/- half a line in horizontal and +/- half a frame in vertical).

Programmed position and size values must be less than the respective horizontal and vertical totals.

Figure 8: Block Diagram

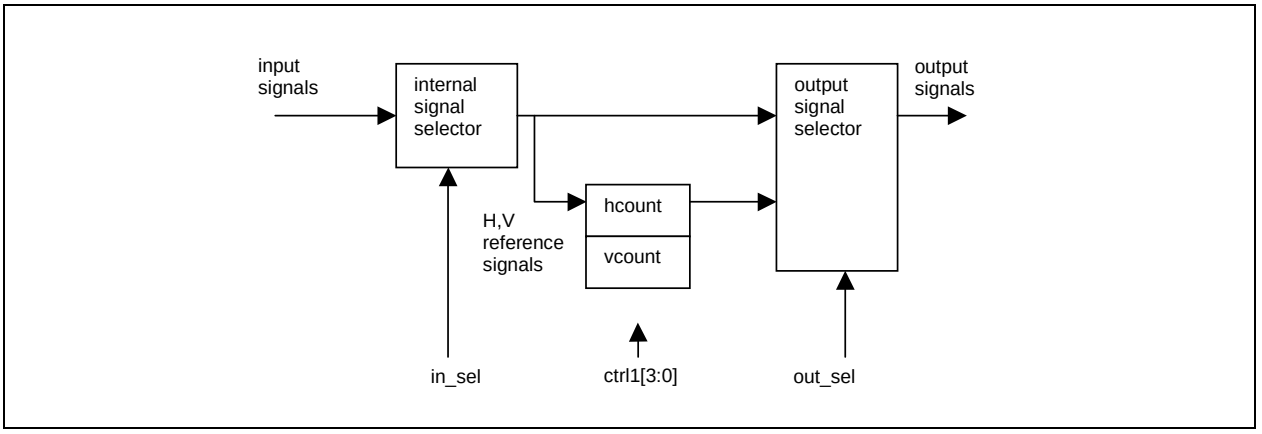

Table 18: Sync Multiplexer Registers (Sheet 1 of 3)

Register Name	Addr	Mode	Bits	Rst	Description
SMUX_CTRL_0	0200	R	[7]	00	toggle on vsync edge as programmed in bit 5
		R/W	[6]		0*: clamp on all lines 1: clamp not during coast
		R/W	[5]		v edge select 0*: falling 1: rising
		R/W	[4]		h edge select 0*: falling 1: rising
		R/W	[3:0]		input select **0*: Ilk_HSync, srt_vsync (normal)** 1: HSYNC input signal, VSYNC input signal 2-E: reserved F: HSync = TCON.SRTD6 output VSync = TCON.SRTD7 output

Table 18: Sync Multiplexer Registers (Sheet 2 of 3)

Register Name	Addr	Mode	Bits	Rst	Description
SMUX_CTRL_1	0201	R/W	[7]	00	shadow event edge select 0*: falling 1: rising
		R/W	[6:4]		register shadow event 0*: no event (upper byte write) 1: in_venab 2: in_enab 3: vtrigger 4: vtrigger count ≠ 0 5-7: reserved
		R/W	[3:0]		output select **Must be set to 0**
SMUX_CLAMP_POS_L	0202	R/W	[7:0]	00	clamp pulse position relative to HSync reference edge
SMUX_CLAMP_POS_U	0203	R/W	[3:0]	00	
SMUX_CLAMP_WIDTH_L	0204	R/W	[7:0]	00	clamp width in inclks
SMUX_CLAMP_WIDTH_U	0205	R/W	[3:0]	00	
SMUX_HPOS_L	0206	R/W	[7:0]	00	horizontal data position relative to HSync reference edge
SMUX_HPOS_U	0207	R/W	[3:0]	00	
SMUX_HPIX_L	0208	R/W	[7:0]	00	horizontal data width
SMUX_HPIX_U	0209	R/W	[3:0]	00	
SMUX_VPOS_L	020A	R/W	[7:0]	00	vertical trigger position in lines relative to vsync reference edge. Should be used for changing position to minimize screen glitches.
SMUX_VPOS_U	020B	R/W	[3:0]	00	
SMUX_VPIX_L	020C	R/W	[7:0]	00	vertical data height
SMUX_VPIX_U	020D	R/W	[3:0]	00	
SMUX_VTRIG_L	020E	R/W	[7:0]	00	delay in lines from smux_vpos to the first line of a new frame
SMUX_VTRIG_U	020F	R/W	[3:0]	00	
SMUX_CLAMP_POS_HW_L	0210	R	[7:0]	00	shadow readback
SMUX_CLAMP_POS_HW_U	0211	R	[3:0]	00	
SMUX_CLAMP_WIDTH_HW_L	0212	R	[7:0]	00	shadow readback
SMUX_CLAMP_WIDTH_HW_U	0213	R	[3:0]	00	
SMUX_HPOS_HW_L	0214	R	[7:0]	00	shadow readback
SMUX_HPOS_HW_U	0215	R	[3:0]	00	
SMUX_HPIX_HW_L	0216	R	[7:0]	00	shadow readback
SMUX_HPIX_HW_U	0217	R	[3:0]	00	

Table 18: Sync Multiplexer Registers (Sheet 3 of 3)

Register Name	Addr	Mode	Bits	Rst	Description
SMUX_VPOS_HW_L SMUX_VPOS_HW_U	0218 0219	R R	[7:0] [3:0]	00 00	shadow readback
SMUX_VPIX_HW_L SMUX_VPIX_HW_U	021A 021B	R R	[7:0] [3:0]	00 00	shadow readback
SMUX_VTRIG_HW_L SMUX_VTRIG_HW_U	021C 021D	R R	[7:0] [3:0]	00 00	shadow readback

Note: A shadow readback register retains the previously programmed value until the relevant event occurs. There is one shadow readback register for each register in the SMUX block.

Table 19: Horizontal Parameters

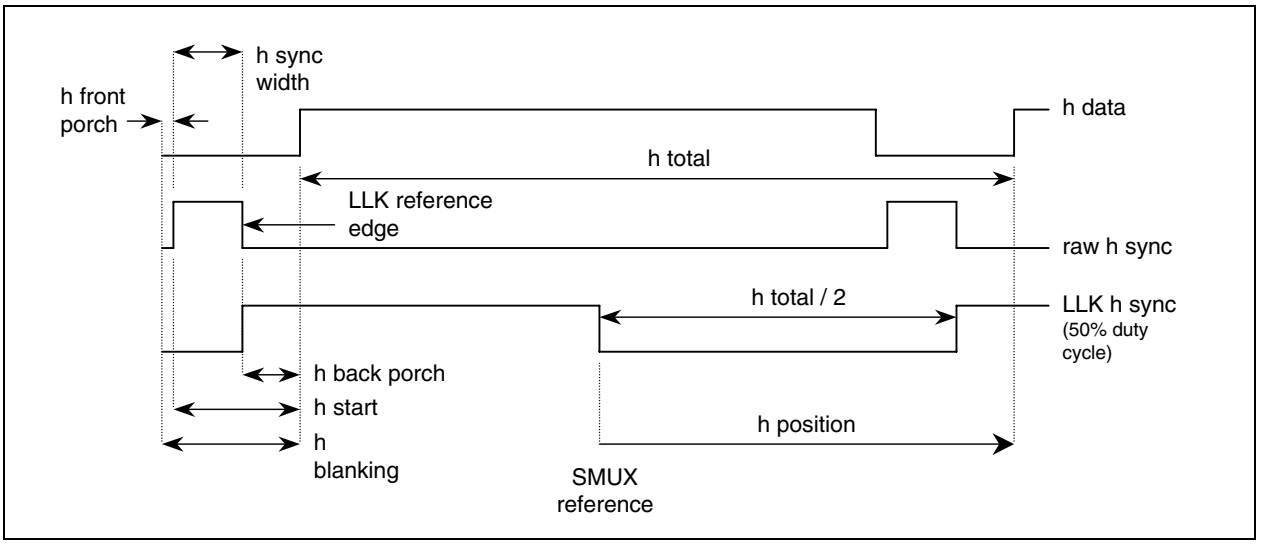

Table 20: Vertical Parameters

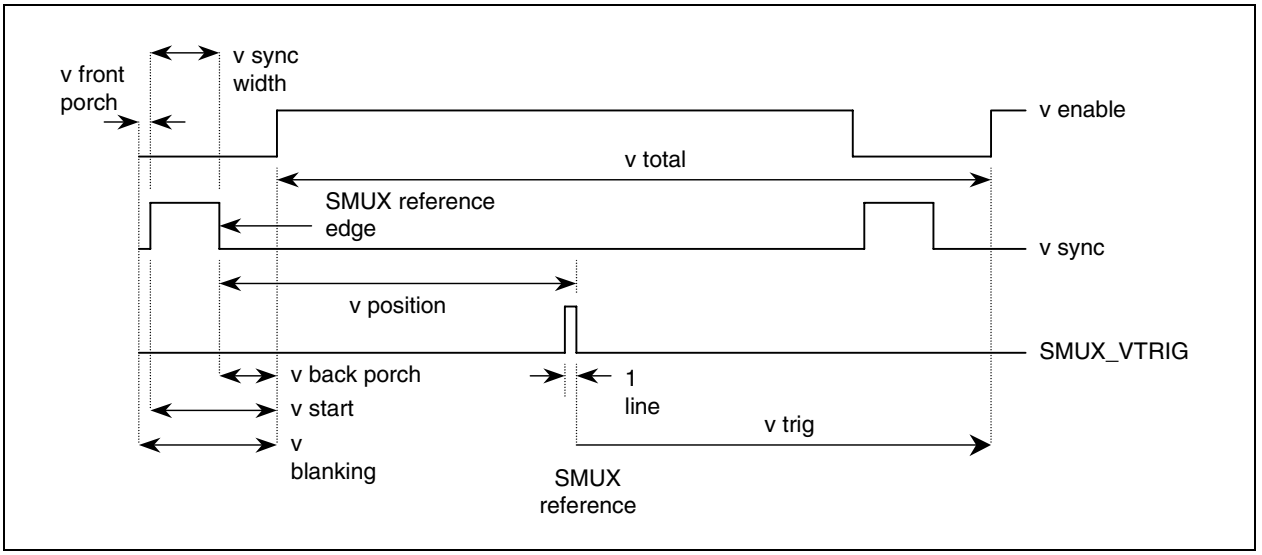

4.9 Data Measurement (DMEAS)

DMEAS provides a number of pixel measurement functions for autosetup (find the best phase, ADC sampling clock, picture auto-position) and autocolor (autolevel, ADC analog range tuning for black and white calibration).

Most DMEAS measurement functions are performed within a programmable input image boundary defined by the top left and bottom right window coordinate registers. The image boundary can be full screen.

DMEAS also includes an annex block called DE Size and is decribed at the end of this spec.

All unused or reserved bits will return as zero.

The DMEAS block only processes the 7 MSBs of the 10 bit ADC outputs. Consequently the maximum pixel value seen by DMEAS is FE.

The horizontal and vertical position measurements are relative to the selected reference sync edges and must be offset before programming SMUX image position, refer to Chapter 4.8: Sync Multiplexer (SMUX) for more information.

4.9.1 Function Summary

The algorithms grouped together are executed simultaneously.

The Color, Threshold, Mode Control, Window Control, and Output registers are shared for all measurements, and are used according to the algorithm selected to measure.

Algorithm	Mode Ctrl	Result	Color	Thresh	Window Control
Edge Intensity 00 Pixel Sum 00	One Shot One Shot	32 bit edge_out 32 bit psum_out	R/G/B/All R/G/B/All	Yes No	Yes Yes
Min / Max 01 Pcd 01	One Shot One Shot	8 bit min / 8 bit max 24 bit pcd_out	R/G/B/All R/G/B/All	No Yes	Yes Yes
Hpos / Vpos 02	One Shot	12 bit Hpos_Min 12 bit Hpos_Max 12 bit Vpos_Min 12 bit Vpos_Max	All	Yes	Yes
De_Size 03	One Shot / Free Run	16 bit De_Size_out 1 bit De_Mismatch	None	No	No

4.9.2 Window Control

All measurements occur within a window in a single frame. The window is defined by the upper left (min_x, min_y) and lower right (max_x, max_y) corners (inclusive). Window coordinates are relative to Sync pulses. A window defined from (0,0) – (FFF, FFF) would go from sync to sync (full screen). The sync reference edge selection is programmable.

4.9.3 Algorithm Control

The available measurements are described in detail below. Most algorithms can be run over each or all color channels. Most algorithms also contain a threshold value to zero out noise and / or amplify edges.

Algorithm, **Color**, **Threshold**, or **Window Control** changes should be made at the end of a valid measurement, otherwise they will corrupt the current measurement in progress:

- set DMEAS parameters for the desired measurement
- start the measurement (don't change the parameters above)
- wait until measurement completion.

4.9.4 Mode Control

All measurements (except De_Size) are performed in One Shot mode. For De_Size measurement, software can request measurements in one of two ways:

- **One Shot** – synchronous with respect to the Micro Controller
- **Free Run** – asynchronous with respect to the Micro Controller

Note: The block indicates when a measurement is valid.

- In **One Shot** mode the measurement is completed through an Auto Clear of the Start condition.
- In **Free Run** mode when the measurement is completed a polling bit toggles. A freeze bit is provided to freeze the results. Measurements still continue while result registers are frozen.

4.9.5 Edge Intensity

The Edge Intensity measurement is the sum of the absolute value of the delta between adjacent pixels. A programmable threshold is applied to zero out noise and amplify edges.

Equation:

Delta_val = abs(pixelA – pixelB) – threshold;

Delta_val = Delta_val < 0 ? 0: Delta_val;

Sum += Delta_val;

For all 3 color channels:

Sum += Delta_val on Red channel + Delta_val on Green channel + Delta_val on Blue channel

The measurement includes all transitions inside the defined window.

Measurement Window: The Edge Intensity is computed over a defined window as described in Window Control.

Color Channels: A specific color channel (R/G/B) or all color channels (All) can be applied to the Edge Intensity.

Result: The output at the end of the measurement is a 32-bit number.

4.9.6 Pixel Sum

The Pixel Sum is the sum of all selected pixels for either a specific color channel or all color channels.

Measurement Window: The Pixel sum is computed over a defined window as described in Window Control.

Color Channels: A specific color channel (R/G/B) or all color channels (All) can be applied to the Pixel Sum.

Result: The output at the end of the measurement is a 32 bit number.

4.9.7 Min / Max

The Min / Max reports the minimum and maximum pixel found.

Measurement Window: The Min / Max value is found over a defined window as described in Window Control.

Color Channels: A specific color channel (R/G/B) or all color channels (All) can be applied to the Min / Max value.

Result: The output at the end of the measurement is two 8 bit numbers, the Minimum Pixel value and the Maximum Pixel value.

4.9.8 Pixel Cumulative Distribution (PCD)

PCD function reports the total number of pixels greater than (or less than) a programmable threshold.

To switch between pixels greater than or pixel less than the threshold, a control bit is provided in the Mode register when requesting a measurement.

Measurement Window: The PCD value is calculated over a defined window as described in Window Control.

Color Channels: A specific color channel (R/G/B) or all color channels (All) can be applied to the PCD function.

Result: The output at the end of the measurement is a 24 bit number.

4.9.9 H Position Min / Max

Horizontal position measures the start and end of video data in inclks relative to the reference edge of HSync.

Data horizontal start is defined as the number of inclks between the selected edge of HSync and the “first data pixel”.

First data pixel definition is either:

1. First pixel > a programmable threshold value (normal)

2. First pixel with the absolute value (current pixel – previous pixel) is > a programmable threshold value

Data horizontal end is defined as the number of inclks between reference edge of HSync and the “last data pixel plus one”. The search for the last pixel ends at the end of a window.

Last data pixel plus one is either:

1. Pixel after the last pixel that is > a programmable threshold value (normal)

2. Last pixel with the absolute value (current pixel – previous pixel) is > a programmable threshold value

To switch between the two threshold methods used in the first and last pixel, a control bit is provided in the DMEAS_MODE_CTRL register when requesting a measurement.

The first and last pixels are measured for each line, and the earliest first and latest last for the selected pixel area are reported out at the end of the measurement.

Measurement Window: The First / Last pixel on a line is found over a defined window as described in Window Control.

Color Channels: All color channels are used to find the First / Last pixel on a line.

Result: The output at the end of the measurement is two 12 bit numbers, H position Min and H position Max.

4.9.10 V Position Min / Max

Vertical position measures the start and end of video data in lines relative to the reference edge of vsync.

Data vertical start is defined as the number of lines between the selected edge of vsync and the “first data pixel”.

First data pixel definition is either:

1. First pixel > a programmable threshold value (normal)

2. First pixel with the absolute value (current pixel – previous pixel) is > a programmable threshold value

Data vertical end is defined as the number of lines between reference edge of vsync and the “last data pixel plus one”. The search for the last pixel ends at the end of a window.

Last data pixel plus one is either:

1. Pixel after the last pixel that is > a programmable threshold value (normal)

2. Last pixel with the absolute value (current pixel – previous pixel) is > a programmable threshold value

To switch between the two threshold methods used in the first and last pixel, a control bit is provided in the DMEAS_MODE_CTRL register when requesting a measurement.

Measurement Window: The selected pixel area range for y the range is vsync to vsync. The selected range for x is not applicable.

Color Channels: All color channels are used to find the First / Last line in a frame.

Result: The output at the end of the measurement is two 12 bit numbers, V position Min and V position Max.

4.9.11 DE Size

DE Size measures the number of inclks per DE.

At the end of the measurement (DE falling edge), the measured value is compared to a programmed expected value +/- a programmed threshold. If the expected value is within the threshold the DE_size_mismatch flag is not set. If the measured size is outside of the threshold the DE_size_mismatch flag is set.

In free run mode the results are updated every line. The DE_size_mismatch flag is set at DE falling edge and reset at DE rising edge.

In One shot mode the results are updated once and stay that way until they are cleared by software. The DE_size_mismatch flag can only be cleared when the reset flag bit is set by software.

Result: 16 bit measured value.

Table 21: DMEAS Registers (Sheet 1 of 3)

Register Name	Addr	Mode	Bits	Rst	Description
DMEAS_AEC_CTRL	0900	R/W	[7:6]	00	color selection 00*: All 01: Red 10: Green 11: Blue
			[5]		vsync edge selection 0*: Rising edge 1: Falling edge
			[4]		HSync edge selection **0*: Rising edge (normal)** 1: Falling edge
			[2]		must be programmed to 1
			[1:0]		Algorithm Selection 00*: Edge Intensity & Pixel Sum 01: Min / Max & PCD 10: H position and V position 11: DE size

Table 21: DMEAS Registers (Sheet 2 of 3)

Register Name	Addr	Mode	Bits	Rst	Description
DMEAS_MODE_CTRL	0901	R/W	[7]	00	DE reset 0*: do not reset the de_mismatch_flag 1: reset the de_mismatch_flag
		R/W	[6]		DE freeze 0*: update I2C registers after every measurement in free run mode 1: freeze DE size results in I2C registers and do not update while this bit is active
		R/W	[5]		DE one shot 0*: free run mode. 1: one shot mode. Applies only to DE_Size measurement. All other measurements are always in One_shot mode.
		R/W	[3]		h_v_pos_sel / pcd_sel - if algorithm = 01 (pcd_sel) 0*: pixel < threshold 1: pixel >= threshold - if algorithm = 10 (h_v_pos_sel) **0*: pixel > threshold (normal)** 1: abs (pixel - previous pixel) > threshold
		R/W	[2]		DMEAS all clear All internal result registers are cleared when this bit is set. This bit is self clearing.
		R	[1]		DMEAS polling bit. Toggles at the end of each measurement in free-run mode. Undefined in one-shot mode.
		R/W	[0]		DMEAS start Data measurement start. This bit is auto-cleared by HW when the measurement is completed.
DMEAS_THRESHOLD	0902	R/W	[7:0]	00	Threshold value to use for selected algorithm.
DMEAS_WIN_MIN_X_L DMEAS_WIN_MIN_X_U	0903 0904	R/W R/W	[7:0] [3:0]	00 00	Minimum X for window control to use with all algorithms.
DMEAS_WIN_MAX_X_L DMEAS_WIN_MAX_X_U	0905 0906	R/W R/W	[7:0] [3:0]	FF 00	Maximum X for window control to use with all algorithms.
DMEAS_WIN_MIN_Y_L DMEAS_WIN_MIN_Y_U	0907 0908	R/W R/W	[7:0] [3:0]	00 00	Minimum Y for window control to use with all algorithms.
DMEAS_WIN_MAX_Y_L DMEAS_WIN_MAX_Y_U	0909 090A	R/W R/W	[7:0] [3:0]	FF 00	Maximum Y for window control to use with all algorithms.
DMEAS_DE_REF_L DMEAS_DE_REF_H	090B 090C	R R	[7:0] [7:0]	00 00	DE size expected result
DMEAS_DE_TOL	090D	R	[7:0]	00	DE tolerance value

Table 21: DMEAS Registers (Sheet 3 of 3)

Register Name	Addr	Mode	Bits	Rst	Description
DMEAS_DATA_0	090E	R	[7:0]	00	Refer to Table 22 below
DMEAS_DATA_1	090F	R	[7:0]	00	
DMEAS_DATA_2	0910	R	[7:0]	00	
DMEAS_DATA_3	0911	R	[7:0]	00	
DMEAS_DATA_4	0912	R	[7:0]	00	
DMEAS_DATA_5	0913	R	[7:0]	00	
DMEAS_DATA_6	0914	R	[7:0]	00	
DMEAS_DATA_7	0915	R	[7:0]	00	

Table 22: DMEAS Output Registers Assignment

	alg_sel = 00	alg_sel = 01	alg_sel = 10	alg_sel = 11
DMEAS_DATA_0	edge_out [7:0]	min_out [7:0]	hpos_min [7:0]	de_size_out [7:0]
DMEAS_DATA_1	edge_out [15:8]	max_out [7:0]	hpos_min [11:8]	de_size_out [15:8]
DMEAS_DATA_2	edge_out [23:16]	pcd_out [7:0]	hpos_max [7:0]	de_mismatch_flag
DMEAS_DATA_3	edge_out [31:24]	pcd_out [15:8]	hpos_max [11:8]	N/A
DMEAS_DATA_4	psum_out [7:0]	pcd_out [23:16]	vpos_min [7:0]	N/A
DMEAS_DATA_5	psum_out [15:8]	N/A	vpos_min [11:8]	N/A
DMEAS_DATA_6	psum_out [23:16]	N/A	vpos_max [7:0]	N/A
DMEAS_DATA_7	psum_out [31:24]	N/A	vpos_max [11:8]	N/A

4.10 Scale (SCL)

ADE scales input video to output panel resolution without external video frame memory. This requires tuning of the panel timing parameters to make the vertical active time match the panel's.

Features:

- Separable 3V x 4H polyphase filter:
  - — 3 line filter for H resolutions <= 1024
  - — 2 line filter for H resolutions > 1024
- independent H & V kernel register storage
  - — 64 phases are interpolated from 6V or 10H reference points
  - — symmetric kernels only
  - — coefficients range from –2 to +1 63/64
- Simple pointer collision feedback mechanism
- 2-way 3rd generation context sensitive filtering

- Background color management

For formulae to program the registers refer to Chapter 7: Scaler Equations on page 132.

4.10.1 Frame Synchronization

Due to the limited pixel memory of the chip, the output active video needs to be perfectly synchronized with the input active video. This mode of operation is called *Frame Lock*.

Figure 9: Frame Lock Operation

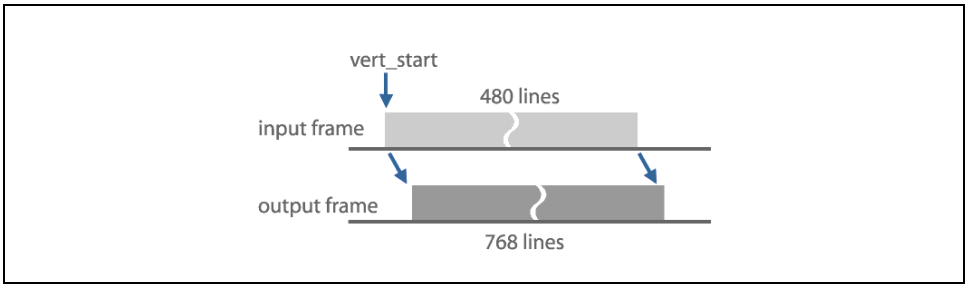

Table 23: Scale Registers (Sheet 1 of 3)

Register Name	Addr	R/W	Bits	Rst	Description
SCL_SRC_HPIX_L SCL_SRC_HPIX_U	0A00 0A01	R/W R/W	[7:0] [3:0]	00 00	input horizontal resolution
SCL_SRC_VPIX_L SCL_SRC_VPIX_U	0A02 0A03	R/W R/W	[7:0] [3:0]	00 00	input vertical resolution
SCL_SCALEFACH_L SCL_SCALEFACH_M SCL_SCALEFACH_U	0A04 0A05 0A06	R/W R/W R/W	[7:0] [7:0] [0]	00 00 00	17-bit horizontal scale factor
SCL_SCALEFACV_L SCL_SCALEFACV_M SCL_SCALEFACV_U	0A07 0A08 0A09	R/W R/W R/W	[7:0] [7:0] [0]	00 00 00	17-bit vertical scale factor
SCL_ORIGHPOS_L SCL_ORIGHPOS_U	0A0A 0A0B	R/W R/W	[7:0] [7:0]	00 00	2's complement , signed number 27-bit horizontal position of the first output pixel
SCL_ORIGVPOS_L SCL_ORIGVPOS_U	0A0C 0A0D	R/W R/W	[7:0] [7:0]	00 00	2's complement , signed number 27-bit vertical position of the first output pixel
SCL_PIPE_RATE_L SCL_PIPE_RATE_U	0A0E 0A0F	R/W R/W	[7:0] [3:0]	00 00	Programmable update rate, which controls when a new pixel column is read out of the line buffer. For (sclk==dotclk) && (dest_hpix == in_hpix), pipe_rate = 0.

Table 23: Scale Registers (Sheet 2 of 3)

Register Name	Addr	R/W	Bits	Rst	Description
SCL_H_KERNEL_0	0A10	R/W	[7:0]	00	Horizontal filter kernel 2's complement, signed numbers ranging from –2 to +1 63/64
SCL_H_KERNEL_1	0A11	R/W	[7:0]	00	
SCL_H_KERNEL_2	0A12	R/W	[7:0]	00	
SCL_H_KERNEL_3	0A13	R/W	[7:0]	00	
SCL_H_KERNEL_4	0A14	R/W	[7:0]	00	
SCL_H_KERNEL_5	0A15	R/W	[7:0]	00	
SCL_H_KERNEL_6	0A16	R/W	[7:0]	00	
SCL_H_KERNEL_7	0A17	R/W	[7:0]	00	
SCL_H_KERNEL_8	0A18	R/W	[7:0]	00	
SCL_H_KERNEL_NORM	0A19	R/W	[7:0]	40	2's complement, signed number used to normalize the H filter kernel (usually 64)
SCL_V_KERNEL_0	0A1A	R/W	[7:0]	00	Vertical filter kernel 2's complement, signed numbers ranging from –2 to +1 63/64 Has a ½ line shift compared to hkernel and must be programmed to a 2 line kernel when in_hpixel > 1024.
SCL_V_KERNEL_1	0A1B	R/W	[7:0]	00	
SCL_V_KERNEL_2	0A1C	R/W	[7:0]	00	
SCL_V_KERNEL_3	0A1D	R/W	[7:0]	00	
SCL_V_KERNEL_4	0A1E	R/W	[7:0]	00	
SCL_V_KERNEL_NORM	0A1F	R/W	[7:0]	40	2's complement, signed number used to normalize the V filter kernels (usually 64)
SCL_BGCOLOR_B	0A20	R/W	[7:0]	00	Blue component of background color, refer to Figure 21
SCL_BGCOLOR_G	0A21	R/W	[7:0]	00	Green component of background color, refer to Figure 21
SCL_BGCOLOR_R	0A22	R/W	[7:0]	00	Red component of background color, refer to Figure 21
SCL_BGCOLOR_CTRL	0A23	R/W	[7]	00	1: force background color
		R/W	[4]		Mute color select: 0*: black 1: use background color when SMEAS_STATUS_RANGE[7] is high
		R/W	[3:2]		0*: line replicate 1 1: line replicate 2 2: line replicate 3 3: vertical border blend
		R/W	[1:0]		0*: pixel replicate 1 1: pixel replicate 2 2: pixel replicate 3 3: horizontal border blend
SCL_PTR_PRE_L	0A24	R	[7:0]	00	The minimum difference of the write pointer and the first of three read pointers; updated every frame LSB = 4 pixels Not valid when SCL_CONTROL[3] = 1
SCL_PTR_PRE_U	0A25	R	[3:0]	00	

Table 23: Scale Registers (Sheet 3 of 3)

Register Name	Addr	R/W	Bits	Rst	Description
SCL_PTR_POST_L	0A26	R	[7:0]	00	The minimum difference of the write pointer and the last of three read pointers; updated every frame LSB = 4 pixels
SCL_PTR_POST_U	0A27	R	[3:0]	00	
SCL_CONTROL	0A28	R/W	[4]	00	allow trigger delay count to be retriggered by SMUX vtrig (normal = 0)
		R/W	[3]		use two tap vertical filter 0*: in hpixel <= 1024 1: in_hpixel > 1024 ptr_pre is invalid in this case
		R/W	[2]		allow output sequencer to be retriggered before vtotal_min (normal = 0)
		R/W	[1]		completes the current frame then stops the sequencer. Poll the vcount register to determine when frame has stopped.
		R/W	[0]		enable scaler timing engine (output sequencer)
SCL_VCOUNT	0A29	R	[7:0]		output sequencer vertical counter >> 4
SCL_HTOTAL_L	0A2A	R/W	[7:0]	00	desired output htotal - 1 out_htotal should be even note: out_henab should be a multiple of 4 for RSDS dual
SCL_HTOTAL_U	0A2B	R/W	[3:0]	00	
SCL_VTOTAL_MIN_L	0A2C	R/W	[7:0]	00	minimum vcount before a new frame can be started
SCL_VTOTAL_MIN_U	0A2D	R/W	[3:0]	00	
SCL_VTOTAL_MAX_L	0A2E	R/W	[7:0]	00	vcount at which the output sequencer will self trigger to maintain a minimum frame rate to the panel
SCL_VTOTAL_MAX_U	0A2F	R/W	[3:0]	00	
SCL_TRIGGER_DLY_L	0A30	R/W	[7:0]	00	time in xclks from SMUX vtrig to when vcount/hcount of the output sequencer are reset to 0,0.
SCL_TRIGGER_DLY_M	0A31	R/W	[7:0]	00	
SCL_TRIGGER_DLY_U	0A32	R/W	[3:0]	00	
SCL_LINE_START_L	0A33	R/W	[7:0]		pipe start value = 4.5 -origin_hpos*4096/scale_factor_h -(21.5+5*4096/pipe_rate)*sclk_period/dotclk_period If pipe_rate = 0, use 4096.
SCL_LINE_START_U	0A34	R/W	[3:0]		
SCL_CONTEXT_0	0A35	R/W	[6:1]	00	context sharp offset
		R/W	[0]		**enable context function (normal)**
SCL_CONTEXT_1	0A36	R/W	[7:6]	00	context smooth slope (recommended = 1, 2, 3)
		R/W	[5:4]		context sharp slope
		R/W	[3:0]		context sharp clip

For proper scale operation, the SCLK frequency must be programmed so that:

1. SCLK_FREQ is greater than the max of DCLK_FREQ and (`IN_HPIXEL x DCLK_FREQ) / DEST_HPIXEL;`
2. SCLK_FREQ < 140 MHz
3. SCL_LINE_START > 0; and
4. SCL_PIPE_RATE <= 4096

The frame synchronization between input and output can be fine tuned using the line buffer pointer crossing feedback registers, SCL_PTR_PRE and SCL_PTR_POST. By adjusting the SCL_TRIGGER_DLY, pointer crossing can be eliminated.

4.10.2 Context Description

The context function allows the scaler to mix the output of three filters (sharp, normal kernel and smooth) on a per pixel basis depending on the local contrast in a 3Vx4H area. The sharpening suppresses ringing / overshoots.

Those 3 kernels: Smooth, User (defined with H and V kernel coefficients) and Sharp run in parallel and can be blended together to finally generate a panel pixel.

If Context is disabled, only User Kernel is used.

If Context is enabled, then the blending of the 3 kernels follows the diagram below. The horizontal axis is the context:

- Context 0 = All neighbour pixels (3x3) have almost same RGB values (greyscale).
- Context F = All neighbour pixels (3x3) have very different RGB values (1x1 Black and White checker pattern).

Context is used along with I2C programmable coefficients to make the kernel blending ratio, as the drawing below shows.

Refer to the context mixing equations for more details. The vertical axis has 63 steps. (63 = 100%).

Only 2 kernels can be blended together. Smooth wins over Sharp.

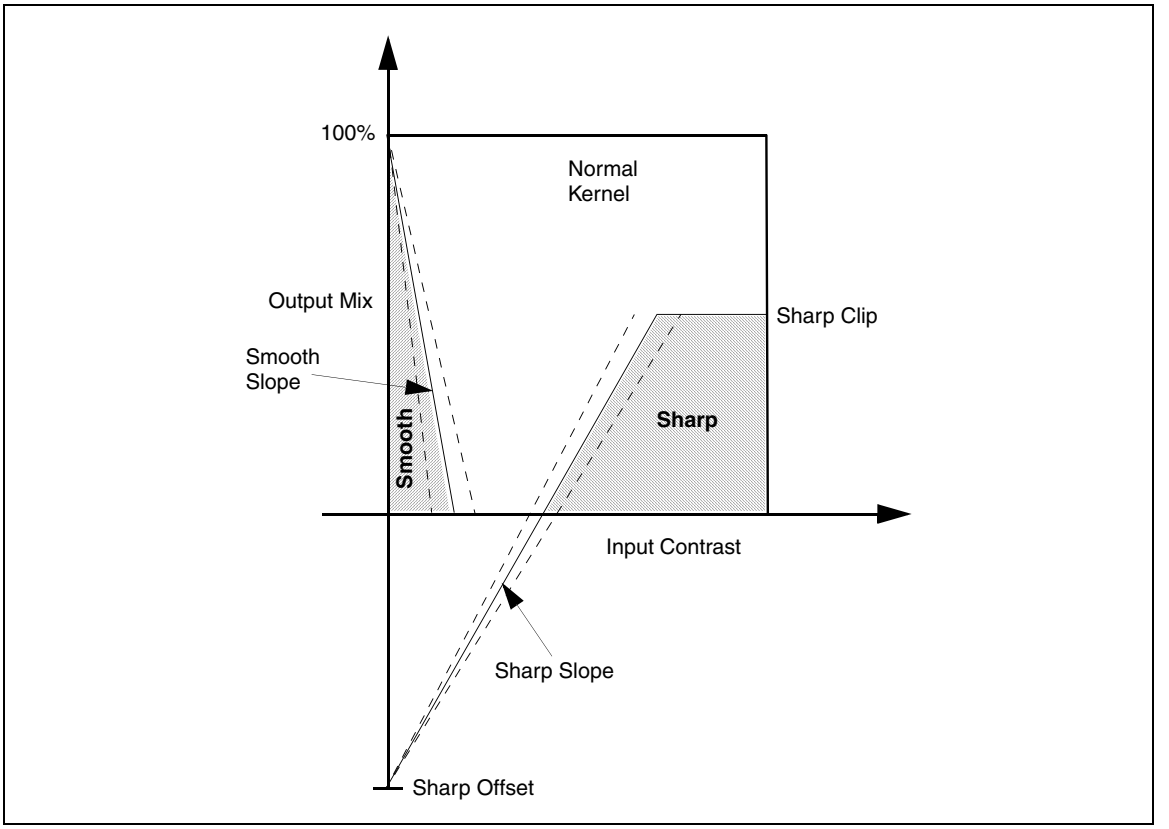

Context Mixing Equations:

contrast = max(max(R0,R1,..)-min(R0,R1,..), max(G0,G1,..)-min(G0,G1,..), max(B0,B1,..)-min(B0,B1,..)), 6b value, [0..63]

sharp_mix = clip((contrast >> (3-sharp_slope)) – sharp_offset, 0 , sharp_clip), 4b value, [0..15]

smooth_mix = (sharp_mix == 0) * (15 – clip((contrast << smooth_slope), 0, 15)), 4b value, [0..15]

normal_mix = 16 – sharp_mix – smooth_mix, [1,,16]

Note: It is recommended to enable the context feature all the time with:

- SCL_CONTEXT_0 = 01
- SCL_CONTEXT_1 = 80

4.10.3 Scale Kernel Example

Recommended kernel is:

- Nearest Neighbor for 1X scale modes (no scaling)
- Cubic for > 1X scale modes (upscaling)
- Bilinear for < 1X scal modes (downscaling)

Register	Address	No Scaling	Down Scaling	Up Scaling	
		Nearest Neighbor	Bilinear	“-0.7” Cubic	“-0.5” Cubic
H_KERNEL_0	0A10	00	00	00	00

Register	Address	No Scaling	Down Scaling	Up Scaling	
		Nearest Neighbor	Bilinear	“-0.7” Cubic	“-0.5” Cubic
H_KERNEL_1	0A11	00	00	FE	FE
H_KERNEL_2	0A12	00	00	FA	FC
H_KERNEL_3	0A13	00	00	F9	FB
H_KERNEL_4	0A14	00	00	FF	00
H_KERNEL_5	0A15	00	10	10	0F
H_KERNEL_6	0A16	20	20	26	24
H_KERNEL_7	0A17	40	30	39	38
H_KERNEL_8	0A18	40	40	41	40
H_KERNEL_NORM	0A19	40	40	40	40
V_KERNEL_0	0A1A	00	00	FB	FA
V_KERNEL_1	0A1B	00	00	F9	FA
V_KERNEL_2	0A1C	00	00	FF	FE
V_KERNEL_3	0A1D	00	10	10	0D
V_KERNEL_4	0A1E	00	20	23	22
V_KERNEL_NORM	0A1F	40	40	40	40

Note: Upscaling and downscaling can be simultaneously combined horizontally and vertically.

4.11 Pattern Generator (PGEN)

The PGEN block can generate graphic patterns to support debug and test tasks for LCD panels such as horizontal or vertical bicolor stripes, bicolor checkers, color bars, gray scales or color scales. It is also possible to pass through the RGB signal coming from the SCL block.

Note: The PGEN block is located before the sRGB color management block.

4.11.1 Overview

The following features of the PGEN block overlap each other like layers, defining display priorities:

- Bars (lowest display priority)
- Cells and Grids
- Borders
- TCON Window Control (highest display priority)

Bars and *cells* are freely programmable in size and independently of each other.

A *border* is a horizontal or vertical borderline. If enabled, it has priority over the above settings.

Above all, a *TCON window*, if enabled, restrains all PGEN settings to a given display area.

4.11.2 Color Mask Sequencer

4.11.2.1 Bars and Groups

A *bar* is the basic graphic element of the PGEN. A *bar group* is based on two independently programmable 24 bit RGB colors named C0 and C1 and programmed into:

- For C0: PGEN_P0_COLOR _R_C0, PGEN_P0_COLOR _G_C0, PGEN_P0_COLOR _B_C0
- For C1: PGEN_P0_COLOR _R_C1, PGEN_P0_COLOR _G_C1, PGEN_P0_COLOR _B_C1

Each color C0 and C1 is assigned to 1 to 8 consecutive bars. The number of bars *minus 1* is programmable in PGEN_P0_MODE, bits [7:5] for C0 and [4:2] for C1:

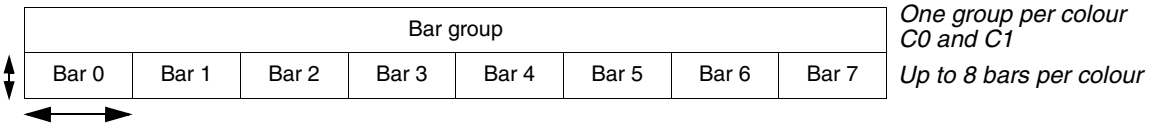

4.11.2.2 Bar Width, Height and Offset Control

Bar's height and width are programmable, respectively in PGEN_P0_WDTH and PGEN_P0_HGHT (16-bit wide).The actual number of displayed bars depends on the bar width, height and the panel resolution. The bars are numbered in incremental fashion from left to right, top to bottom.

If the combined size of all bars in a group is *smaller* than the display area, each of the C0 and C1 bar groups is replicated across the display, as long as the bars still fit in the display area:

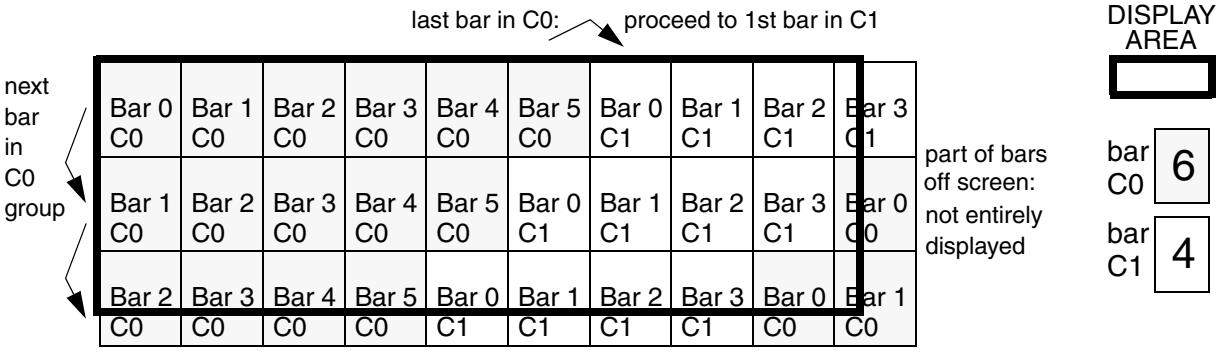

The height and width of a bar can range anywhere from 1 pixel (checkerboard) to full screen.

Additionally, an offset in both directions can be programmed respectively in registers PGEN_P0_WDTH_X_OFFSET and PGEN_P0_HGHT_Y_OFFSET. It shifts the top left corner (1st bar of C0 group) off the display area.

Note: The offset value, for each direction, must be less than the corresponding bar size.

4.11.2.3 Color Masks

Each bar can filter any R G B component of its assigned C0 or C1 color, by means of 3 mask bits per bar in registers PGEN_P0_SEQ_COL0_COL1 (bars 0 & 1) thru PGEN_P0_SEQ_COL6_COL7 (bars 6 & 7). The color is "ANDed" with the mask:

- if either R G B bit is reset, the corresponding colour component is blocked
- if set, the colour component is not blocked

Example:

PGEN_COLOR_C0_B = PGEN_COLOR _C0_G = PGEN_COLOR _C0_R = FF sets C0 to **white**

PGEN_P0_MODE is set to AC:

- Number of bars in C0 = PGEN_P0_MODE[7:5] +1 = 6 (bars 0 to 5)

- Number of bars in C1 = PGEN_P0_MODE[4:2] +1 = 4 (bars 0 to 3)

PGEN_P0_SEQ_COL0_COL1 = 42:

- Bar 0 filters G and B components but lets R pass: this 1st bar is displayed in **red**
- Bar 1 filters R and B components but lets G pass: this 2nd bar is displayed in **green**

PGEN_P0_SEQ_COL2_COL3 = 17:

- Bar 2 filters R and G components but lets B pass: this 3rd bar is displayed in **blue**
- Bar 3 does not filter any of the R G B components: this 4th bar is displayed in **white**

PGEN_P0_SEQ_COL4_COL5 = 77: bars 4 and 5 do not filter R G B and are displayed in **white**.

PGEN_P0_SEQ_COL6_COL7 is don't care, since a maximum of 6 bars is used by C0 and C1.

Across the display, 6 bars **[red] [green] [blue] [white] [white] [white]** (from C0 group) are now displayed, followed by 4 bars **[red] [green] [blue] [white]** (from C1 group), then again 6 bars from C0 group etc.. until the right border of the display area is reached:

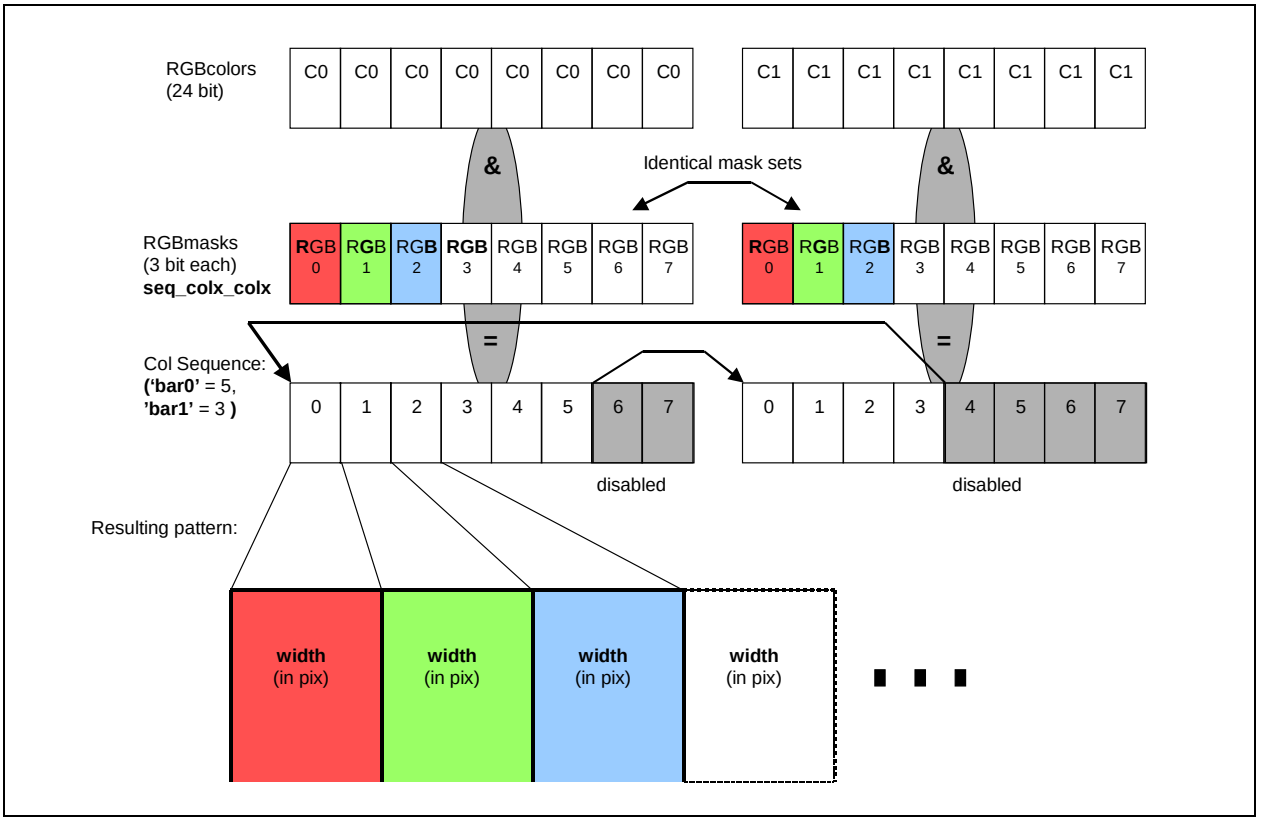

The bars also repeat vertically.

4.11.2.4 Gradient Control

The gradient control registers modify the colors C0 and C1 as follows:

- PGEN_P0_GRADDELTA_R: increment the Red value by this register value
- PGEN_P0_GRADDELTA_G: increment the Green value by this register value
- PGEN_P0_GRADDELTA_B: increment the Blue value by this register value
- PGEN_P0_GRADSTEP_X: apply the increment value to each color every X horizontal pixels
- PGEN_P0_GRADSTEP_Y: apply the increment value to each color every Y vertical lines

Note: The values wrap over FF: for example, a value of FF for GRADDELTA will decrease the color by 1 (if GRADDELTA was 50: 50+FF=4F=GRADDELTA-1)

All kinds of color shades can be achieved by wisely using the above parameters.

4.11.3 8 x 8 Grid Layout with Optional Resets

A *cell* is a graphic element grouped by 8 in a *grid*. A set of 8 Grid Registers PGEN_GRID0 to PGEN_GRID7 represents an 8x8 bitmap where each bit represents one rectangular cell: this makes a total grid of 8x8 cells.

Each cell either displays the bar pattern defined above, or the input video signal, depending on the value in its corresponding PGEN_GRID register:

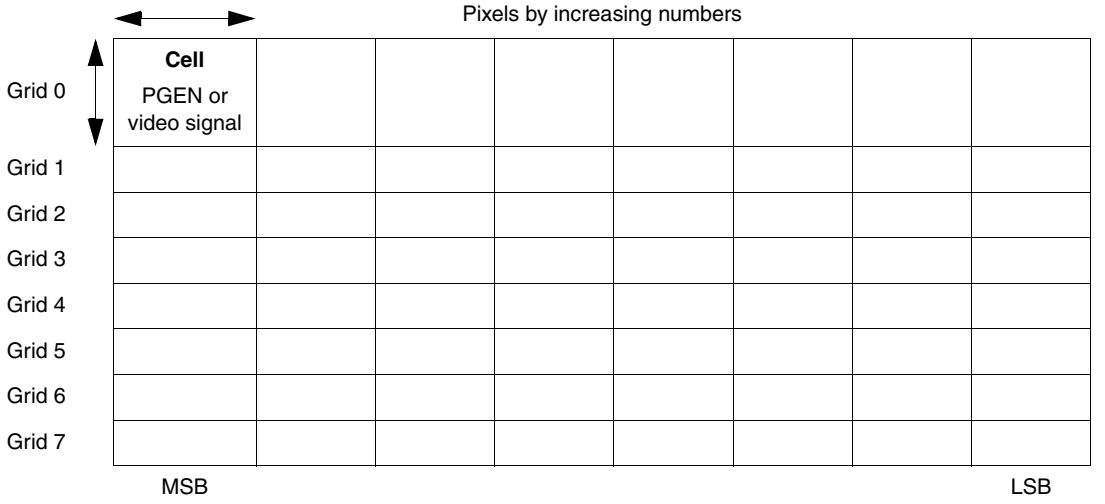

All cells have the same size, defined by one horizontal and one vertical grid pitch registers PGEN_GRID_X and PGEN_GRID_Y (16-bit wide).

Additionally, an offset in both directions can be programmed respectively in registers PGEN_P0_WDTH_X_OFFSET and PGEN_P0_HGHT_Y_OFFSET. It shifts the top left corner (1st cell of Grid 0) off the display area.

Note: The offset value, for each direction, must be less than the corresponding cell size.

The actual number of displayed cells depends on the programmed cell size:

- If it makes the complete 8x8 grid **bigger** than the total display area, only the cells or part of cells that are included in the display area are displayed. Any cell (on the right and bottom sides) outside the display area is ignored and not displayed

- If it makes the complete 8x8 grid **smaller** than the total display area, the 8x8 pattern repeats itself across the entire display area, both vertically and horizontally

Figure 10: 8x8 Grip Mapping Example

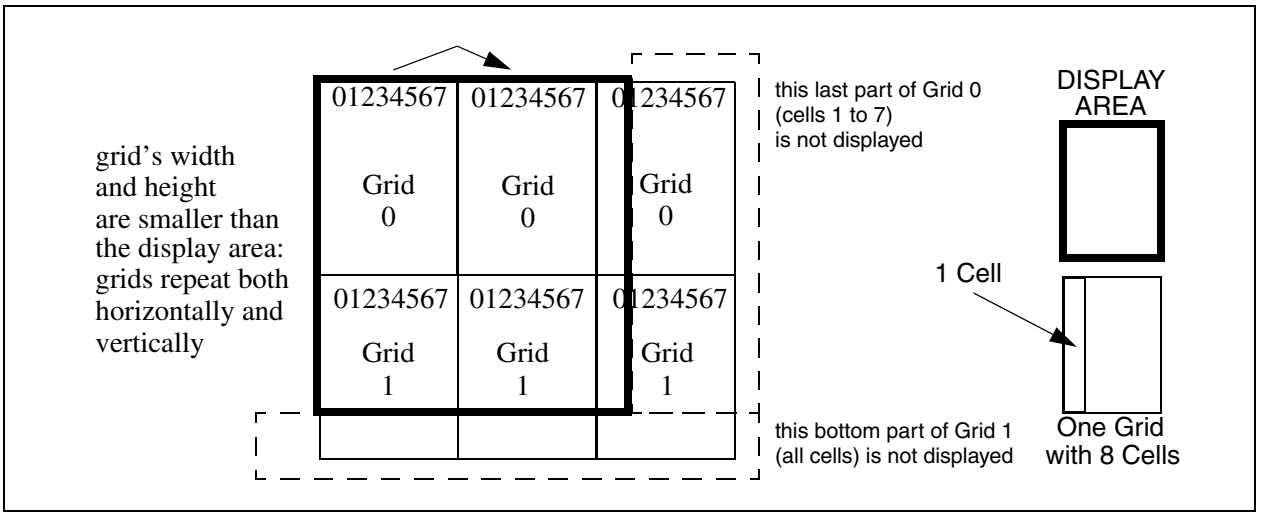

4.11.3.1 Cell Reset

When PGEN_P0_MODE[1] bit is set, the bar counters will be reset to bar 0, and gradients color counters will be reset to the default color value C0, each time a new grid cell is reached.

This is to be combined with bar offset settings (refer to Section 4.11.2.2: Bar Width, Height and Offset Control and the example provided hereafter). For example, this will affect all patterns with non-zero values for PGEN_P0_GRADSTEP_X and/or PGEN_P0_GRADSTEP_Y.

4.11.3.2 Color C0 Replacement

When PGEN_P0_MODE[0] bit is set, the input video signal takes the place of color C0. In that case, non-zero gradients will apply the increment value to each R G B color of the input signal, not C0.

Note: If the displayed picture has noticiable jitter, the input R G B values are not stable and may generate heavy noise on screen when the gradient applied to R G B values rolls over from FF to 00.

4.11.4 Borders

The border generator adds a single pixel wide borderline to the panel area. There are 4 edges: top, bottom, left and right. Each edge can be enabled independently, and programmed to one of 8 basic colors using a 3-bit RGB mask:

Table 24: Borders Colors

Colour	Red	Green	Blue	Value
Black	0	0	0	**0**
Blue	0	0	1	**1**
Green	0	1	0	**2**
Cyan	0	1	1	**3**
Red	1	0	0	**4**
Magenta	1	0	1	**5**
Yellow	1	1	0	**6**

Table 24: Borders Colors

Colour	Red	Green	Blue	Value
White	1	1	1	**7**

The borders override the graphic pattern. In addition, the left and right edges override the top and bottom ones: for example, when both left and top side borders are enabled, the upper left corner has the color of the left side border.

Example:

PGEN_ENAB = 01 enables PGEN

PGEN_X_TOT_L = 00, PGEN_X_TOT_H = 05 considering that the panel is 1280 pixels wide

PGEN_Y_TOT_L = 00, PGEN_Y_TOT_H = 04 considering that the panel is 1024 pixels high

PGEN_B_TOP_BOT = EE adds a yellow horizontal borderline to top and bottom of display area

PGEN_B_LFT_RHT = 9A adds a blue vertical borderline to the left and a green one to the right

4.11.5 TCON Window Control

Normally, the whole PGEN block is enabled if its global enable bit PGEN_ENAB[0] is set.

If it is not set but the bit PGEN_ENAB[1] is set instead, the programmed pattern will show only inside a rectangular window defined by the associated TCON signal TCON_X_PGEN. Outside this window, the input video stream will be displayed as generated by the scaler.

Note: If the global enable bit PGEN_ENAB[0] is set, it has priority over PGEN_ENAB[1].

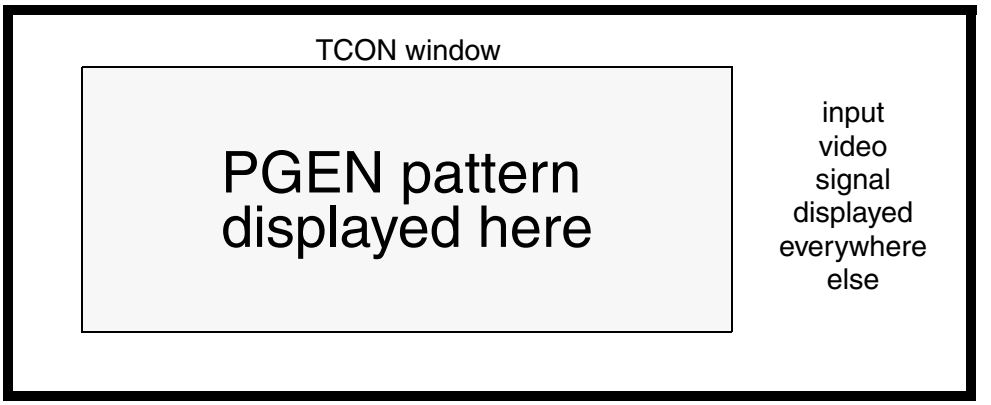

Table 25: Pattern Generator Registers (Sheet 1 of 3)

Register Name	Addr	Mode	Bits	Rst	Description
PGEN_ENAB	0600	R/W	[1]	00	Window control via TCON signal 0*: disable, use global enable bit 0 below 1: enable PGEN by TCON_X_PGEN
		R/W	[0]		Global PGEN enable bit 0*: disable 1: enable (this bit overrides bit 1 above)
PGEN_X_TOT_L PGEN_X_TOT_U	0601 0602	R/W R/W	[7:0] [3:0]	00 00	screen total horizontal size in pixels

Table 25: Pattern Generator Registers (Sheet 2 of 3)

Register Name	Addr	Mode	Bits	Rst	Description
PGEN_Y_TOT_L PGEN_Y_TOT_U	0603 0604	R/W R/W	[7:0] [3:0]	00 00	screen total vertical size in lines
PGEN_B_TOP_BOT	0605	R/W	[7]	00	top border enable bit
		R/W	[6:4]		top border R G B color enable bits
		R/W	[3]		bottom border enable bit
		R/W	[2:0]		bottom border R G B color enable bits
PGEN_B_LFT_RHT	0606	R/W	[7]	00	left border enable bit
		R/W	[6:4]		left border R G B color enable bits
		R/W	[3]		right border enable bit
		R/W	[2:0]		right border R G B color enable bits
PGEN_GRID0	0607	R/W	[7:0]	00	grid ‘s row 0 0: select P0 (bar pattern) 1: select input signal (from scaler)
PGEN_GRID1	0608	R/W	[7:0]	00	grid ‘s row 1
PGEN_GRID2	0609	R/W	[7:0]	00	grid ‘s row 2
PGEN_GRID3	060A	R/W	[7:0]	00	grid ‘s row 3
PGEN_GRID4	060B	R/W	[7:0]	00	grid ‘s row 4
PGEN_GRID5	060C	R/W	[7:0]	00	grid ‘s row 5
PGEN_GRID6	060D	R/W	[7:0]	00	grid ‘s row 6
PGEN_GRID7	060E	R/W	[7:0]	00	grid ‘s row 7
PGEN_GRID_X_L PGEN_GRID_X_U	060F 0610	R/W R/W	[7:0] [3:0]	00 00	grid cells width, in pixels
PGEN_GRID_Y_L PGEN_GRID_Y_U	0611 0612	R/W R/W	[7:0] [3:0]	00 00	grid cells height, in lines
PGEN_GRID_X_OFFSET_L PGEN_GRID_X_OFFSET_U	0613 0614	R/W R/W	[7:0] [3:0]	00 00	grid’s horizontal offset, in pixels
PGEN_GRID_Y_OFFSET_L PGEN_GRID_Y_OFFSET_U	0615 0616	R/W R/W	[7:0] [3:0]	00 00	grid’s vertical offset, in lines
PGEN_P0_MODE	0617	R/W	[7:5]	00	number of bars in C0 (actual number -1)
		R/W	[4:2]		number of bars in C1 (actual number -1)
		R/W	[1]		cell reset enable
		R/W	[0]		video replaces C0 enable
PGEN_P0_COLOR_B_C0	0618	R/W	[7:0]	00	color C0 – blue
PGEN_P0_COLOR_G_C0	0619	R/W	[7:0]	00	color C0 – green
PGEN_P0_COLOR_R_C0	061A	R/W	[7:0]	00	color C0 – red
PGEN_P0_COLOR_B_C1	061B	R/W	[7:0]	00	color C1 – blue
PGEN_P0_COLOR_G_C1	061C	R/W	[7:0]	00	color C1 – green

Table 25: Pattern Generator Registers (Sheet 3 of 3)

Register Name	Addr	Mode	Bits	Rst	Description
PGEN_P0_COLOR_R_C1	061D	R/W	[7:0]	00	color C1 – red
PGEN_P0_SEQ_COL0_COL1	061E	R/W	[6:4]	00	bar 0: R G B color mask
		R/W	[2:0]		bar 1: R G B color mask
PGEN_P0_SEQ_COL2_COL3	061F	R/W	[6:4]	00	bar 2: R G B color mask
		R/W	[2:0]		bar 3: R G B color mask
PGEN_P0_SEQ_COL4_COL5	0620	R/W	[6:4]	00	bar 4: R G B color mask
		R/W	[2:0]		bar 5: R G B color mask
PGEN_P0_SEQ_COL6_COL7	0621	R/W	[6:4]	00	bar 6: R G B color mask
		R/W	[2:0]		bar 7: R G B color mask
PGEN_P0_WDTH_L PGEN_P0_WDTH_U	0622 0623	R/W R/W	[7:0] [3:0]	00 00	bar width, in pixels
PGEN_P0_HGHT_L PGEN_P0_HGHT_U	0624 0625	R/W R/W	[7:0] [3:0]	00 00	bar height, in lines
PGEN_P0_WDTH_X_OFFSET_L PGEN_P0_WDTH_X_OFFSET_U	0626 0627	R/W R/W	[7:0] [3:0]	00 00	bar horizontal offset, in pixels
PGEN_P0_HGHT_Y_OFFSET_L PGEN_P0_HGHT_Y_OFFSET_U	0628 0629	R/W R/W	[7:0] [3:0]	00 00	bar vertical offset, in lines
PGEN_P0_GRADDELTA_B	062A	R/W	[7:0]	00	blue gradient delta
PGEN_P0_GRADDELTA_G	062B	R/W	[7:0]	00	green gradient delta
PGEN_P0_GRADDELTA_R	062C	R/W	[7:0]	00	red gradient delta
PGEN_P0_GRADSTEP_X	062D	R/W	[7:0]	00	gradient horizontal step, in pixels
PGEN_P0_GRADSTEP_Y	062E	R/W	[7:0]	00	gradient vertical step, in lines

EXAMPLES

All examples assume that the display panel size is 1280x1024 and no pattern is preset, therefore:

- PGEN_X_TOT_L = 00, PGEN_X_TOT_H = 05
- PGEN_Y_TOT_L = 00, PGEN_Y_TOT_H = 04
- All other registers are 00
- A stable picture is being displayed

Example 1

PGEN_GRID0 = PGEN_GRID7 = 00 generated pattern is enabled on all 8 cells of grid 0 (top) and grid 7 (bottom)

PGEN_GRID1..6 = 7E generated pattern is enabled on 1st and 8th cells only of grid 1 thru 6

PGEN_GRID_X_L = 1280 / 8 cells per grid across screen = A0, PGEN_GRID_X_H = 00

PGEN_GRID_Y_L = 1024 / 8 lines across screen = 80, PGEN_GRID_Y_H = 00

PGEN_P0_MODE = 00 color C0 uses 1 bar (bar 0) only

PGEN_P0_SEQ_COL0_COL1 = 70 bar 0 does not block any of the R G B colors

PGEN_P0_COLOR_B_C0 = 00

PGEN_P0_COLOR_G_C0 = FF define color C0 as light green

PGEN_P0_COLOR_B_C0 = 00

PGEN_ENABLE = 01 enable PGEN

This displays a **thick green block** that surrounds the **original picture in the center**.

Now, if PGEN_P0_GRADDELTA_G = FF and PGEN_P0_GRADSTEP_X = 05, the solid green is turned into one linear horizontal shade of green, evenly spread over the horizontal axis from left (light green) to right (black).

Additionally, if PGEN_P0_MODE = 02, the gradient registers are preset to color C0 each time a new grid cell is displayed; this gives 8 distinct shades of green (1 per cell) across the display.

Example 2

PGEN_GRID0, 2, 4, 6 = 00 all cells of these grids display the pattern

PGEN_GRID1, 3, 5, 7= 80 1st cell of these grids displays the real picture

PGEN_GRID_X_L = 00, PGEN_GRID_X_H = 05 the 1st cell takes the entire display width

PGEN_GRID_Y_L = 1024 / 8 lines across screen = 80, PGEN_GRID_Y_H = 00 one cell takes 1/8th of the display height, so that all 8 grids will be displayed

PGEN_P0_MODE = 80 color C0 uses 4 bars (bars 0 1 2 3)

PGEN_P0_SEQ_COL0_COL1 = 74

- bar 0 does not block any of the R G B colors (displays C0 as is)
- bar 1 blocks G and B colors (displays R only)

PGEN_P0_SEQ_COL2_COL3 = 21

- bar 2 blocks R and B colors (displays G only)
- bar 3 blocks R and G colors (displays B only)

PGEN_P0_COLOR_B_C0 = PGEN_P0_COLOR_G_C0 = PGEN_P0_COLOR_B_C0 = 00: C0 is black

PGEN_P0_GRADDELTA_R = PGEN_P0_GRADDELTA_G = PGEN_P0_GRADDELTA_B = 01: R G B color components of C0 gradually increase from left to right

PGEN_P0_GRADSTEP_X = 05: shade is evenly spread over the horizontal axis

PGEN_ENABLE = 01 enable PGEN

This displays a complex pattern made of 8 horizontal rows:

- 1st row (= bar 0) displays a shade of **white**, from left (black) to right (white)
- 3rd row (= bar 1) displays a shade of **red**, from left (black) to right (light red)
- 5th row (= bar 2) displays a shade of **green**, from left (black) to right (light green)
- 7th row (= bar 3) displays a shade of **blue**, from left (black) to right (light blue)
- 2nd, 4th, 6th and 8th rows display the **original picture**

When displaying the same pattern from an external pattern generator, since each row of each color is displayed side by side with the same reference shade row generated by the PGEN, defects can be spotted immediately. This is a very useful test to see possible ADC or panel defects.

4.12 sRGB (SRGB)

The sRGB block performs two primary functions:

1. Parametric gamma correction on multiple windows or full screen, used for video enhancement in a window and digital contrast/brightness control. The window coordinates are set by TCON registers.
2. 3D color cube warping RGB color space.

The entire backend of the ADE3800 (from Scaler output to the APC) has a 10 bit database including the sRGB block. The sRGB controls correspond to the 8 MSBs of the data.

4.12.1 Parametric Gamma, Digital Contrast / Brightness on Multiple Windows

The function can be applied to the entire window by programming the window control to full screen. Each color channel acts independently. Simple digital contrast and brightness can be programmed using this hardware function. The desired window coordinates are programmed into the TCON.

Note: If both Gamma1 and Gamma2 are enabled, Gamma1 has priority over Gamma2.

4.12.2 Color Space Warp

The 8 corners of the color cube are independently controlled in 3D space with smooth interpolation of intermediate colors. Registers are 2's complement color deltas.

For example:

- to make WHITE more like RED, program SRGB_WHITE_R to a small positive value.
- to turn RED into GREEN, set Gain = 2 in SRGB_CTRL0[7:6], then SRGB_RED_R = 0x80 (-128) to block the red, and SRGB_RED_G=0x30 (the higher the value (up to 0x7F) the brighter the green).

Figure 11: Color Space Warp

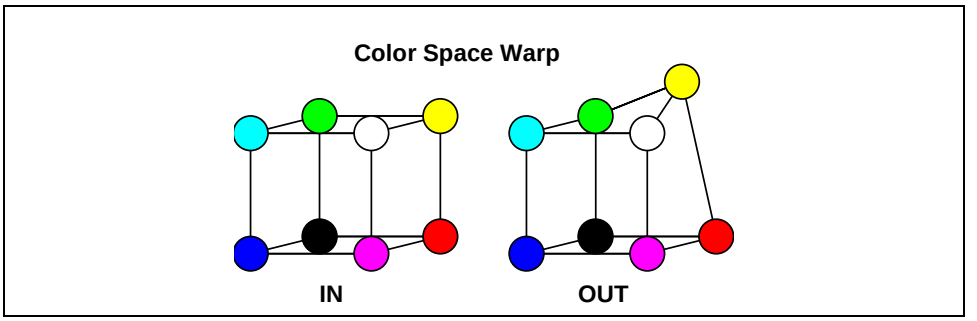

The step value for each color delta depends on the gain setting in SRGB_CTRL0[7:6], as follows:

Table 26: Color Space Warp Gain Control

SRGB_CTRL0[7:6]	Gain	Step Size	Color Delta Range
0	1	0.5	[-64;+63]
1	2	1	[-128;+127]
2	4	2	[-256;+255]

Note: It is recommended to limit the range of all red/green/blue correction registers and black/red/green/blue/yellow/cyan/magenta/white delta registers to [-64..+63] to avoid color overflow/underflow computation.

Table 27: sRGB Registers (Sheet 1 of 2)

Register Name	Addr	Mode	Bits	Rst	Description
SRGB_CTRL0	0D00	R/W	[7:6]	00	Gain control of sRGB coeff values 0*: gain = 1 (half step) 1: gain = 2 (single step) 2: gain = 4 (double step)
		R/W	[5:4]		00*: gamma2 disabled 01: gamma2 full screen 10: gamma2 windowed 11: reserved
		R/W	[3:2]		00*: gamma1 disabled 01: gamma1 full screen 10: gamma1 windowed 11: reserved
		R/W	[1:0]		00*: srgb disabled 01: srgb full screen 10: srgb windowed 11: reserved
SRGB_CTRL1	0D01	R/W	[4]	00	**0*: dither pattern disabled (normal)**
SRGB_CTRL2	0D02	R/W	[3]	00	White point saturation inside gamma2 window 0*: disabled 1: enabled
		R/W	[2]		White point saturation inside gamma1 window 0*: disabled 1: enabled
		R/W	[1]		White point saturation inside srgb window 0*: disabled 1: enabled
		R/W	[0]		White point saturation over full screen 0*: disabled 1: enabled
SRGB_BLACK_B	0D03	R/W	[7:0]	00	black point bluedelta
SRGB_BLACK_G	0D04	R/W	[7:0]	00	black point green delta
SRGB_BLACK_R	0D05	R/W	[7:0]	00	black point red delta
SRGB_RED_B	0D06	R/W	[7:0]	00	red point blue delta
SRGB_RED_G	0D07	R/W	[7:0]	00	red point green delta
SRGB_RED_R	0D08	R/W	[7:0]	00	red point red delta
SRGB_GREEN_B	0D09	R/W	[7:0]	00	green point bluedeltablue
SRGB_GREEN_G	0D0A	R/W	[7:0]	00	green point green delta
SRGB_GREEN_R	0D0B	R/W	[7:0]	00	green point reddelta
SRGB_BLUE_B	0D0C	R/W	[7:0]	00	blue point bluedelta
SRGB_BLUE_G	0D0D	R/W	[7:0]	00	blue point green delta
SRGB_BLUE_R	0D0E	R/W	[7:0]	00	blue point red delta

Table 27: sRGB Registers (Sheet 2 of 2)

Register Name	Addr	Mode	Bits	Rst	Description
SRGB_YELLOW_B	0D0F	R/W	[7:0]	00	yellow point bluedelta
SRGB_YELLOW_G	0D10	R/W	[7:0]	00	yellow point green delta
SRGB_YELLOW_R	0D11	R/W	[7:0]	00	yellow point red delta
SRGB_CYAN_B	0D12	R/W	[7:0]	00	cyan point bluedelta
SRGB_CYAN_G	0D13	R/W	[7:0]	00	cyan point green delta
SRGB_CYAN_R	0D14	R/W	[7:0]	00	cyan point red delta
SRGB_MAGENTA_B	0D15	R/W	[7:0]	00	magenta point bluedelta
SRGB_MAGENTA_G	0D16	R/W	[7:0]	00	magenta point green delta
SRGB_MAGENTA_R	0D17	R/W	[7:0]	00	magenta point red delta
SRGB_WHITE_B	0D18	R/W	[7:0]	00	white point bluedelta
SRGB_WHITE_G	0D19	R/W	[7:0]	00	white point green delta
SRGB_WHITE_R	0D1A	R/W	[7:0]	00	white point red delta
SRGB_WSAT_LIM_B	0D1B	R/W	[7:0]	FF	White point saturation value for the bluecomponent
SRGB_WSAT_LIM_G	0D1C	R/W	[7:0]	FF	White point saturation value for the green component
SRGB_WSAT_LIM_R	0D1D	R/W	[7:0]	FF	White point saturation value for the red component
SRGB_GAMMA1_CON_B	0D1E	R/W	[7:0]	00	first parametric contrast correction, bluecomponent
SRGB_GAMMA1_CON_G	0D1F	R/W	[7:0]	00	first parametric contrast correction, green component
SRGB_GAMMA1_CON_R	0D20	R/W	[7:0]	00	first parametric contrast correction, red component
SRGB_GAMMA1_BRI_B	0D21	R/W	[7:0]	00	first parametric brightness correction, bluecomponent
SRGB_GAMMA1_BRI_G	0D22	R/W	[7:0]	00	first parametric brightness correction, green component
SRGB_GAMMA1_BRI_R	0D23	R/W	[7:0]	00	first parametric brightness correction, red component
SRGB_GAMMA1_GAM_B	0D24	R/W	[7:0]	00	first parametric gamma correction, bluecomponent
SRGB_GAMMA1_GAM_G	0D25	R/W	[7:0]	00	first parametric gamma correction, green component
SRGB_GAMMA1_GAM_R	0D26	R/W	[7:0]	00	first parametric gamma correction, red component
SRGB_GAMMA2_CON_B	0D27	R/W	[7:0]	00	second parametric contrast correction, bluecomponent
SRGB_GAMMA2_CON_G	0D28	R/W	[7:0]	00	second parametric contrast correction, green component
SRGB_GAMMA2_CON_R	0D29	R/W	[7:0]	00	second parametric contrast correction, red component
SRGB_GAMMA2_BRI_B	0D2A	R/W	[7:0]	00	second parametric brightness correction, bluecomponent
SRGB_GAMMA2_BRI_G	0D2B	R/W	[7:0]	00	second parametric brightness correction, green component
SRGB_GAMMA2_BRI_R	0D2C	R/W	[7:0]	00	second parametric brightness correction, red component
SRGB_GAMMA2_GAM_B	0D2D	R/W	[7:0]	00	second parametric gamma correction, bluecomponent
SRGB_GAMMA2_GAM_G	0D2E	R/W	[7:0]	00	second parametric gamma correction, green component
SRGB_GAMMA2_GAM_R	0D2F	R/W	[7:0]	00	second parametric gamma correction, red component

4.13 Gamma (GAM)

The Gamma block implements three independent 256 point gamma curves for each of R, G, and B channels.

Its features are as follows:

- 256x8b table per color channel stores 2's complement difference to straight line
- 10b input/output (0 to 1023), range of delta = -128 to +127 (+/- 1/8th full scale)
- double LUT amplitude control to change range to 2 x (delta = -256 to +254)
- fast write mode for loading 3 tables with the same data
- glitch free write mode
- clipping on output to [0,1023]
- programmable offset_value added from offset_position0 to offset_position1 (inclusive).

gamma_out_r = gamma_in_r + lut_r + (offset_position0 <= gamma_in_r <= offset_position1) ? offset_value: 0

gamma_out_g = gamma_in_g + lut_g + (offset_position0 <= gamma_in_g <= offset_position1) ? offset_value: 0

gamma_out_b = gamma_in_b + lut_b + (offset_position0 <= gamma_in_b <= offset_position1) ? offset_value: 0

Table 28: Gamma Registers

I2C Address Label	Addr	Mode	Bits	Rst	Description
GAM_CTRL	0C00	R/W	[3]	00	0*: delta range = -128 to +127 1: delta range = -256 to +254
			[2]		0*: i2c to RAM transfer at selected i2c address only 1: i2c to RAM transfer the same value to Red, Green, and Blue RAMs when selecting Red RAM addresses
			[1]		0*: Write i2c to RAM allowed during active video 1: Write i2c to RAM during video blanking only (shadowed)
			[0]		0*: gamma bypassed 1: gamma enabled
GAM_POSITION0	0C01	R/W	[7:0]	00	IF (gamma_in/4 >= offset_position0 && gamma_in/4 <= offset_position1) THEN offset = offset_value * 16 ELSE offset = 0 (gamma_out = gamma_in + lut + offset)
GAM_POSITION1	0C02	R/W	[7:0]	00	See offset_position0 for details
GAM_OFFSET	0C03	R/W	[5:0]	00	Multipled by 16. 2's complement number represents –512 to +496 inclusive. See offset_position0 for details

Table 29: Gamma LUT RAM addresses

I2C Address	Memory Contents
1000 – 10FF	Red RAM
1100 – 11FF	Green RAM
1200 – 12FF	Blue RAM

Note: RAM ACCESS REQUIRES DOTCLK >= XCLK (refer to Chapter 4.22: I²C Registers and RAM Addresses)

4.14 On-Screen Display (OSD)

The On-Screen Display block has the following features:

- Registers 4900 – 4915 are shadowed and are updated on the falling edge of out_venab.
- Pointers for the global RAM refer to 24 bit word locations.
- Pointers for the color LUT RAM refer to 32 bit word locations.
- Write access to the RAMs is shadowed.
- Read access to the global RAM is shadowed.
- Display list must be in top to bottom order for consistent operation.One RAM block 4096x24 is used for the full operation of the OSD, and is internally subdivided for character use or display list with the ability to set up the pointers through I2C.
- The characters can be displayed anywhere on the screen.
- H/V position is programmable per row
- Global Alpha blending for all the characters displayed as well as Alpha blending per color with 16 levels
- H/V flip per character
- 1bpp/2bpp/3bpp/4bpp characters supported.
- Rotation support
- Color LUT of 64 colors (24bit RGB True Color + 4 bit alpha).

Table 30: OSD Registers (Sheet 1 of 3)

Register Name	Addr	Mode	Bits	Rst	Description
OSD_RAM	1700-46FF	R/W			I2C address space allocated for OSD Ram
OSD_CLUT	4700-47FF	R/W			I2C address space allocated for OSD CLUT

Table 30: OSD Registers (Sheet 2 of 3)

Register Name	Addr	Mode	Bits	Rst	Description
OSD_CTRL0	4900	R/W	[7:4]	00	Global Alpha LSB = 1/15
		R/W	[3]		Rotation 0*: 12H x 18V char 1: 18H x 12V char
		R/W	[2]		TCON Highlight Window Palette Index
		R/W	[1]		TCON Highlight Window Enable
		R/W	[0]		OSD enable
OSD_CTRL1	4901	R/W	[7]	00	OSD List Pointer Select
		R/W	[6:0]		Total OSD Rows
OSD_GLBL_X_OFFSET_L OSD_GLBL_X_OFFSET_U	4902 4903	R/W R/W	[7:0] [3:0]	00 00	Global OSD Xpos offset in pixels
OSD_GLBL_Y_OFFSET_L OSD_GLBL_Y_OFFSET_U	4904 4905	R/W R/W	[7:0] [3:0]	00 00	Global OSD Ypos offset in pixels
OSD_CP_1BPP_L OSD_CP_1BPP_U	4906 4907	R/W R/W	[7:0] [3:0]	00 00	1bpp Char Pointer
OSD_CP_2BPP_L OSD_CP_2BPP_U	4908 4909	R/W R/W	[7:0] [3:0]	00 00	2bpp Char Pointer
OSD_CP_3BPP_L OSD_CP_3BPP_U	490A 490B	R/W R/W	[7:0] [3:0]	00 00	3bpp Char Pointer
OSD_CP_4BPP_L OSD_CP_4BPP_U	490C 490D	R/W R/W	[7:0] [3:0]	00 00	4bpp Char Pointer
OSD_DLP0_L OSD_DLP0_U	490E 490F	R/W R/W	[7:0] [3:0]	00 00	Display List Pointer0
OSD_DLP1_L OSD_DL1_U	4910 4911	R/W R/W	[7:0] [3:0]	00 00	Display List Pointer1
OSD_CLUT_1BPP	4912	R/W	[4:0]	00	Base Color LUT for 1bpp
OSD_CLUT_2BPP	4913	R/W	[4:0]	00	Base Color LUT for 2bpp
OSD_CLUT_3BPP	4914	R/W	[4:0]	00	Base Color LUT for 3bpp
OSD_CLUT_4BPP	4915	R/W	[4:0]	00	Base Color LUT for 4bpp

Table 30: OSD Registers (Sheet 3 of 3)

Register Name	Addr	Mode	Bits	Rst	Description
OSD_OSD_CTRL0_HW	4920	R	[7:0]	00	HW Shadow Readback
OSD_OSD_CTRL1_HW	4921	R	[7:0]	00	
OSD_GLBL_X_OFFSET_HW_L	4922	R	[7:0]	00	
OSD_GLBL_X_OFFSET_HW_U	4923	R	[3:0]	00	
OSD_GLBL_Y_OFFSET_HW_L	4924	R	[7:0]	00	
OSD_GLBL_Y_OFFSET_HW_U	4925	R	[3:0]	00	
OSD_CP_1BPP_HW_L	4926	R	[7:0]	00	
OSD_CP_1BPP_HW_U	4927	R	[3:0]	00	
OSD_CP_2BPP_HW_L	4928	R	[7:0]	00	
OSD_CP_2BPP_HW_U	4929	R	[3:0]	00	
OSD_CP_3BPP_HW_L	492A	R	[7:0]	00	
OSD_CP_3BPP_HW_U	492B	R	[3:0]	00	
OSD_CP_4BPP_HW_L	492C	R	[7:0]	00	
OSD_CP_4BPP_HW_U	492D	R	[3:0]	00	HW Shadow Readback
OSD_DLP0_HW_L	492E	R	[7:0]	00	
OSD_DLP0_HW_U	492F	R	[3:0]	00	
OSD_DLP1_HW_L	4930	R	[7:0]	00	
OSD_DLP1_HW_U	4931	R	[3:0]	00	
OSD_CLUT_1BPP_HW	4932	R	[4:0]	00	
OSD_CLUT_2BPP_HW	4933	R	[4:0]	00	
OSD_CLUT_3BPP_HW	4934	R	[4:0]	00	
OSD_CLUT_4BPP_HW	4935	R	[4:0]	00	

Figure 12: OSD RAM

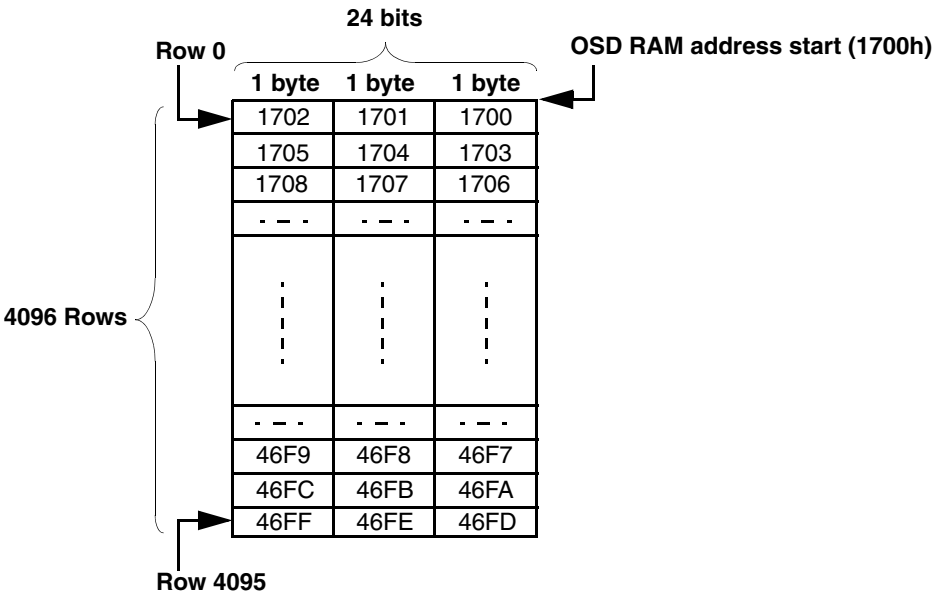

I²C Address = OSD_DP address + (row x 3) + 0 ... 2

number of bytes in a row

4.14.1 Implementation

Row Type 0 Attributes: (total 48 bits)			
[Y Position]	12 bits	(HPOS)	
[X Position]	12 bits	(YPOS)	
[Type of Row]	2 bits	(TR)	
[Char/Row]	7 bits	(CR)	
[Palette]	1 bits	(PI)	
[FlipHV]	2 bits	(HVF)	
[CharDepth0]	2 bits	(CD0)	
[CharDepth1]	2 bits	(CD1)	NOT USED
[BG]	4 bits	(BG)	
[FG]	4 bits	(FG)	

Row Type 0 – Character Attributes: (total 8 bits)		
[CharID]	8 bits	(CID)

Row Type 1 Attributes: (total 48 bits)			
[Y Position]	12 bits	(HPOS)	
[X Position]	12 bits	(YPOS)	
[Type of Row]	2 bits	(TR)	
[Char/Row]	7 bits	(CR)	
[Palette]	1 bits	(PI)	NOT USED
[FlipHV]	2 bits	(HVF)	NOT USED
[CharDepth0]	2 bits	(CD0)	
[CharDepth1]	2 bits	(CD1)	
[BG]	4 bits	(BG)	
[FG]	4 bits	(FG)	

Row Type 1 – Character Attributes: (total 12 bits)		
[CharID]	8 bits	(CID)
[FlipHV]	2 bits	(HVF)
[CharDepthIndex]	1 bits	(CD)
[PaletteIndex]	1 bits	(PI)

Note: The Character Attribute [CharDepthIndex] selects which of the 2 char depths will be used from RowAttribute [CharDepth0] or RowAttribute [CharDepth1].

Note: Only two types of char depths can be used, and they are specified in RowAttribute [CharDepth0].

Row Type 2 Attributes: (total 48 bits)			
[Y Position]	12 bits	(HPOS)	
[X Position]	12 bits	(YPOS)	
[Type of Row]	2 bits	(TR)	
[Char/Row]	7 bits	(CR)	
[Palette]	1 bits	(PI)	NOT USED
[FlipHV]	2 bits	(HVF)	NOT USED
[CharDepth0]	2 bits	(CD0)	NOT USED
[CharDepth1]	2 bits	(CD1)	NOT USED
[BG]	4 bits	(BG)	
[FG]	4 bits	(FG)	

Row Type 2 – Character Attributes: (total 16 bits)		
[CharID]	8 bits	(CID)
[FlipHV]	2 bits	(HVF)
[CharDepth]	2 bits	(CD)
[PaletteIndex]	4 bits	(PI)

Figure 13: Display List Memory Structure (all the bits are packed)

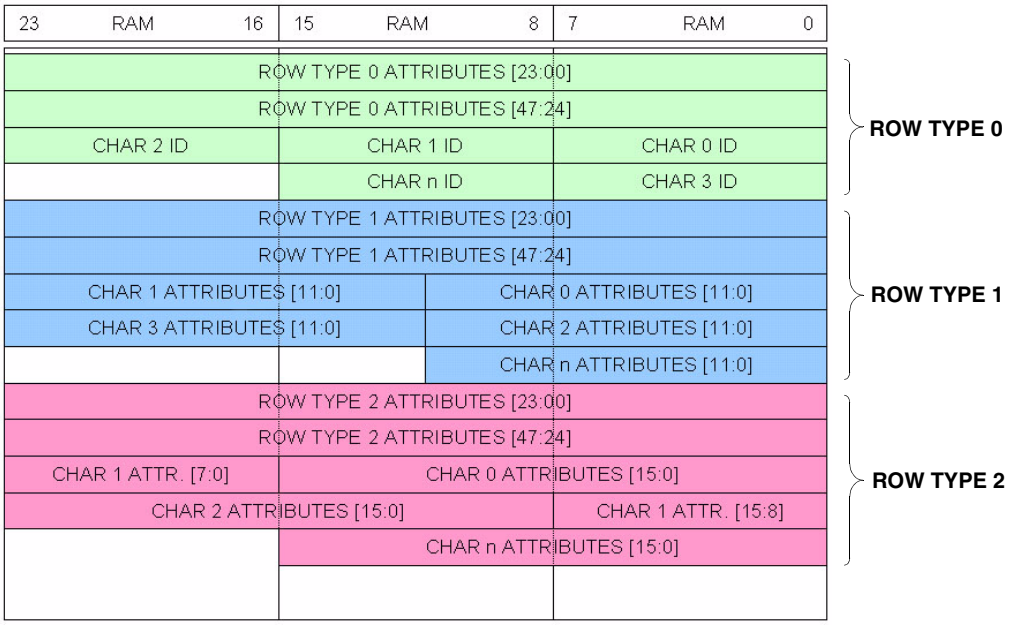

Note: All Row Attributes are assigned as shown:

YPOS[23:12]				XPOS[11:0]			
FG[23:20]	BG[19:16]	CD1[15:14]	CD0[13:12]	HVF[11:10]	PI[9]	CR[8:2]	TR[1:0]

Note: Character Attributes for Row Type 0 are assigned as shown:

CID[7:0]

Note: Character Attributes for Row Type 1 are assigned as shown:

PI[11]	CD[10]	HF[9]	VF[8]	CID[7:0]

Note: Character Attributes for Row Type 2 are assigned as shown:

PI[15:12]	CD[11:10]	HF[9]	VF[8]	CID[7:0]

4.14.2 Color LUT Calculation

Color pointers in the CLUT [5:0], where:

PI = 4-bit Palette Index (RT0/RT1 have 1--bit PI; RT2 has 4bit PI) ;

P1, P2, P3, P4 = 5-bit programmable pointers, clut_1bpp, clut_2bpp, clut_3bpp, clut_4bpp, respectively;

PixelData = 2-bit, 3-bit or 4-bit value depending on the character depth 2bpp, 3bpp or 4bpp, respectively;

C = 4-bit background/foreground color (used only for 1bpp characters);

tcon = OSD_CTRL0[1] * tcon_window where tcon_window is a signal from the TCON block specifying the window to be highlighted.

	RowType0	RowType1	RowType2
1bpp	(tcon*OSD_CTRL0[2]*32 + !tcon*32*PI + P1 + BC) % 64	(tcon*OSD_CTRL0[2]*32 + !tcon*32*PI + P1 + BC) % 64	(tcon*OSD_CTRL0[2]*(8 + PI%8)*4 + !tcon*4*PI + P1 + BC) % 64
2bpp	(tcon*OSD_CTRL0[2]*32 + !tcon*32*PI + P2 + PixelData) % 64	(tcon*OSD_CTRL0[2]*32 + !tcon*32*PI + P2 + PixelData) % 64	(tcon*OSD_CTRL0[2]*(8 + PI%8)*4 + !tcon*4*PI + P2 + PixelData) % 64
3bpp	(tcon*OSD_CTRL0[2]*32 + !tcon*32*PI + P3 + PixelData) % 64	(tcon*OSD_CTRL0[2]*32 + !tcon*32*PI + P3 + PixelData) % 64	(tcon*OSD_CTRL0[2]*(8 + PI%8)*4 + !tcon*4*PI + P3 + PixelData) % 64
4bpp	(tcon*OSD_CTRL0[2]*32 + !tcon*32*PI + P4 + PixelData) % 64	(tcon*OSD_CTRL0[2]*32 + !tcon*32*PI + P4 + PixelData) % 64	(tcon*OSD_CTRL0[2]*(8 + PI%8)*4 + !tcon*4*PI + P4 + PixelData) % 64

4.14.3 Alpha Blending

4-bit Alpha is applied to the OSD providing 16 levels (6.25% steps) of blending.

Alpha = 0F:no blending at all (100% OSD data).

Alpha = 00:full blending (100% input video).

The OSD region has a 4-bit global alpha and each RGB has a 4-bit color alpha.

Total alpha is calculated as follows:

r_o = (r_i[9:0] + (({lut_data[23:16],lut_data[23:22]} - r_i[9:0]) * total_alpha))

g_o = (g_i[9:0] + (({lut_data[15:8] ,lut_data[15:14]} - g_i[9:0]) * total_alpha))

b_o = (b_i[9:0] + (({lut_data[7:0] ,lut_data[7:6]} - b_i[9:0]) * total_alpha))

total_alpha_selector[7:0] = (glbl_alpha[3:0] * color_alpha[3:0])

The total alpha read from a LUT of 32 entries that are normalized, where the range is total_alpha = 0,1,2,3,4...16; and only the 5 msb's of total_alpha_selector[7:3] are used as select.

i.e. 16 represents 1.0 "no alpha blending at all". Figure 14 shows how the Alpha Blending is constructed:

Figure 14: OSD Alpha Blending

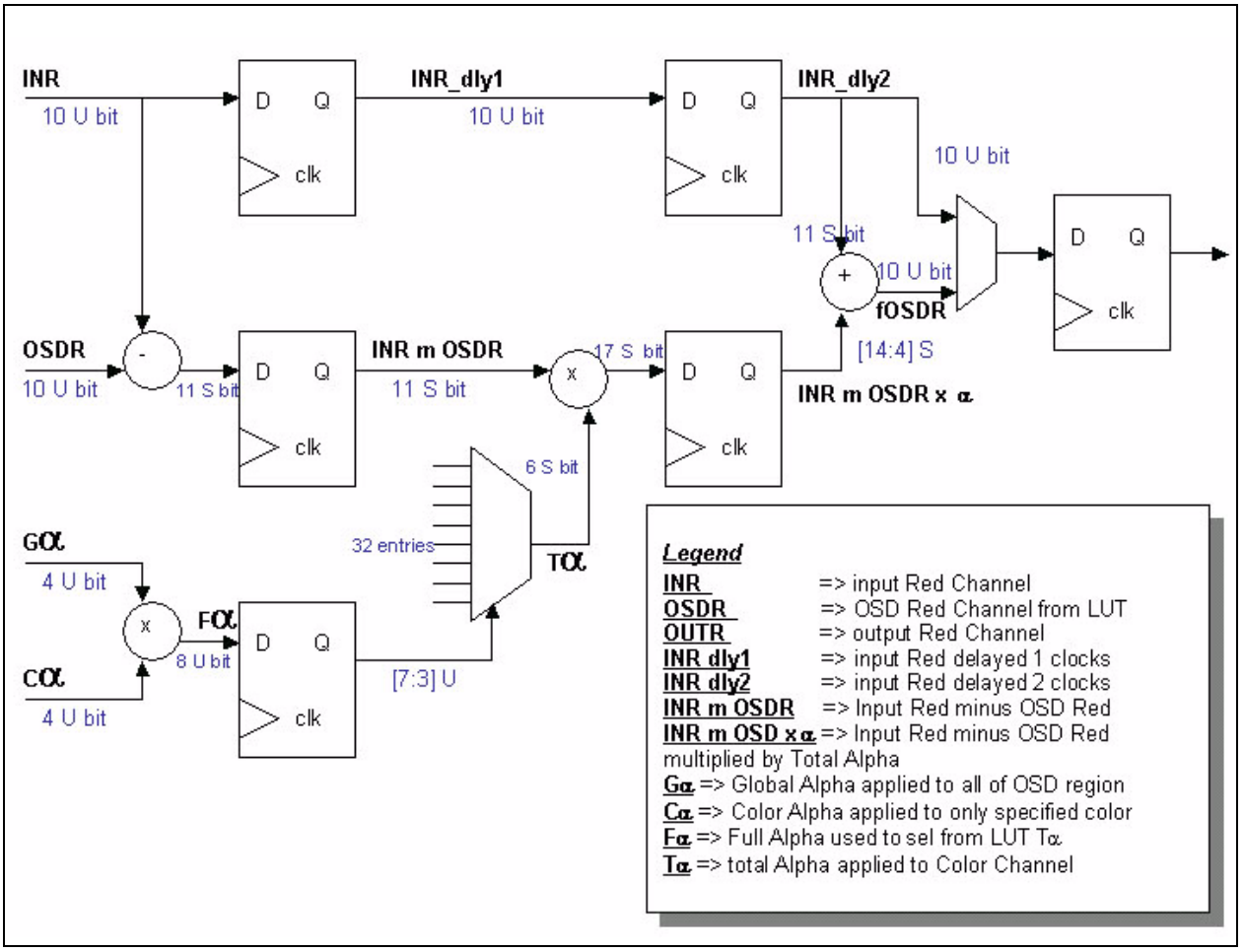

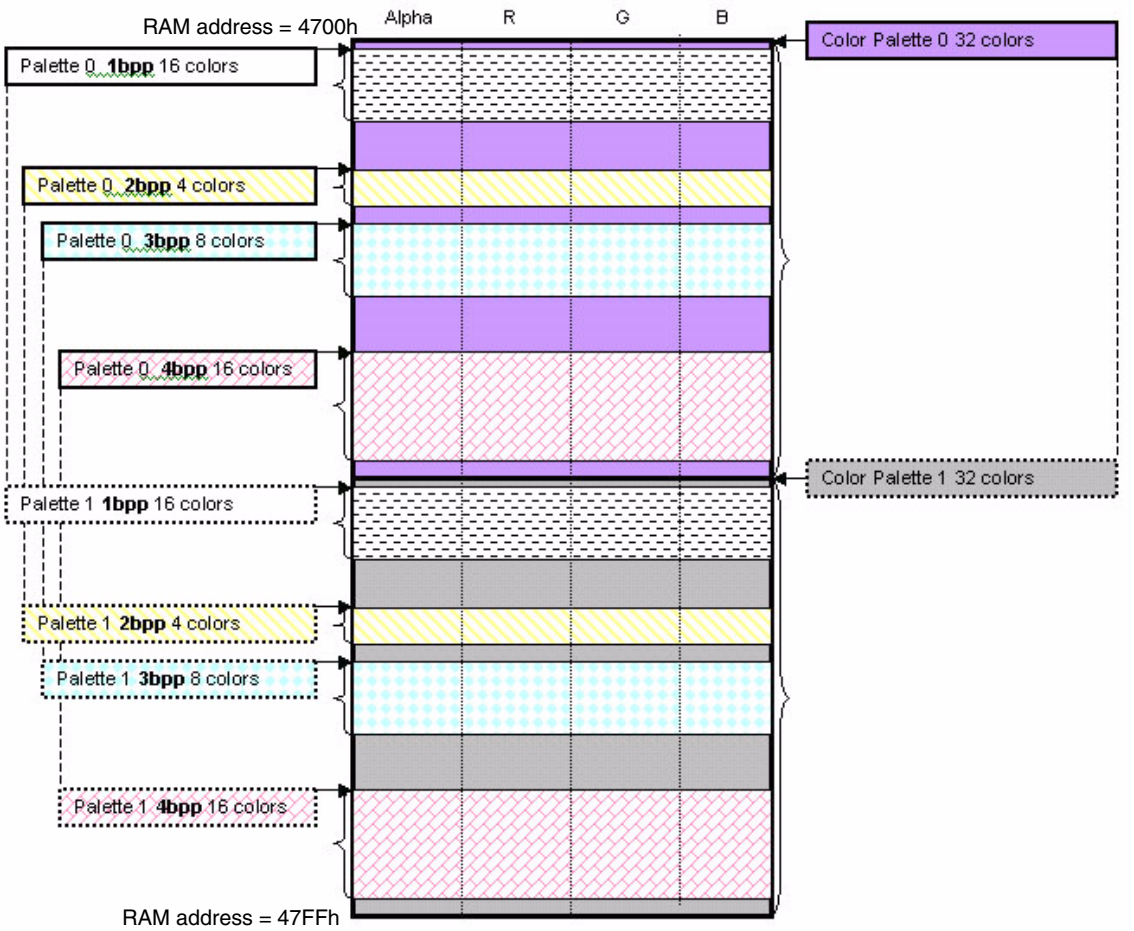
RAM address = 4700h
Alpha
R
G
B
Color Palette 0 32 colors
Palette 0 1bpp 16 colors
Palette 0 2bpp 4 colors
Palette 0 3bpp 8 colors
Palette 0 4bpp 16 colors
Color Palette 1 32 colors
Palette 1 1bpp 16 colors
Palette 1 2bpp 4 colors
Palette 1 3bpp 8 colors
Palette 1 4bpp 16 colors
RAM address = 47FFh

Figure 15: Global Memory Assignment

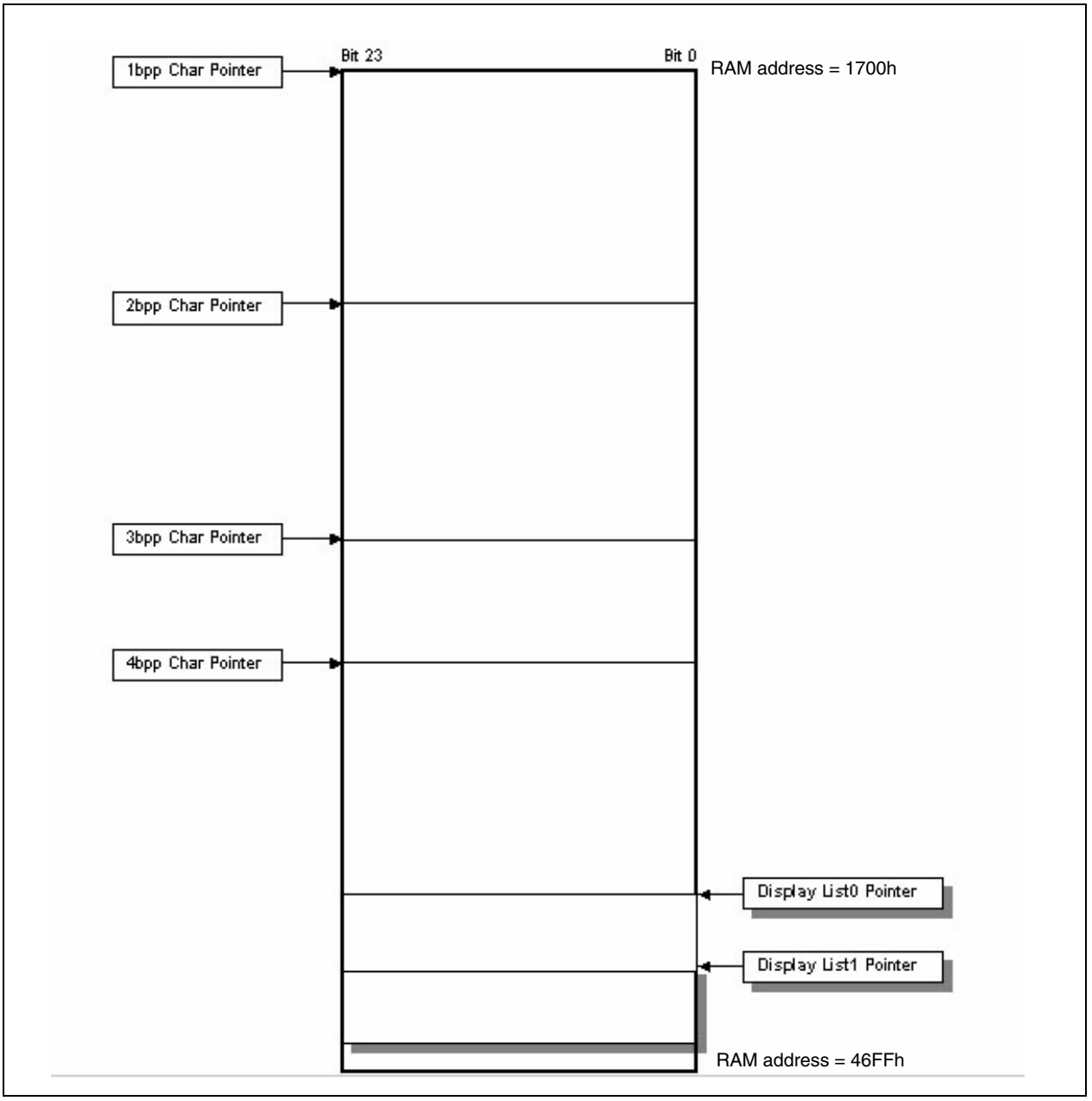

4.14.4 RAM Memory

Character Memory:

175 x 12 x 18 x 1 bpp = 37800 bits

42 x 12 x 18 x 4 bpp = 36288 bits

The total character storage RAM is estimated based on supporting 175 x 1bpp and 42 x 4bpp characters.

Total RAM allocated for Character storage => **74088 bits**

Display List:

Row Attr. 48 bits x 15 rows = 720 bits

Char Attr. 16 bits x 30 chars x 15 rows = 7200 bits

The total display list is estimated based on the current OSD size of 30x15 characters.

Total Display List Memory => **7920 bits**

TOTAL OSD Estimated RAM Memory: **82008 bits** (RAM selected 98304 bits)

Color LUT:

64 x 32 = **2048 bits**

For a 30x15 character display the OSD block global RAM has room remaining for:

255 => 1bpp (room for 418 char, but only 255 can be addressed w/ 8bit CID) or,

209 => 2bpp or,

139 => 3bpp or,

104 => 4bpp

Global 24b RAM is programmed in the following order:

Example

```
WRITE 00 [Data] -> ram_addr 0 [23: 16]
WRITE 01 [Data] -> ram_addr 0 [15: 8]
WRITE 02 [Data] -> ram_addr 0 [ 7: 0]
WRITE 03 [Data] -> ram_addr 1 [23: 16]
WRITE 04 [Data] -> ram_addr 1 [15:  8]
```

... and so on …..

Similarly, the Color LUT 32b RAM, is programmed in the following order:

Example

```
WRITE 00 [Alpha] -> lut_addr 0 [27:24]
WRITE 01 [  R  ]  -> lut_addr 0 [23:16]
WRITE 02 [  G  ]  -> lut_addr 0 [15: 8]
WRITE 03 [  B  ]  -> lut_addr 0 [ 7: 0]
WRITE 04 [Alpha] -> lut_addr 1 [27:24]
```

... and so on …..

Each character is programmed into the RAM starting with the upper left pixel, and it continues going to the right bottom. For example, programming of a 1bpp character “B” will be as follows:

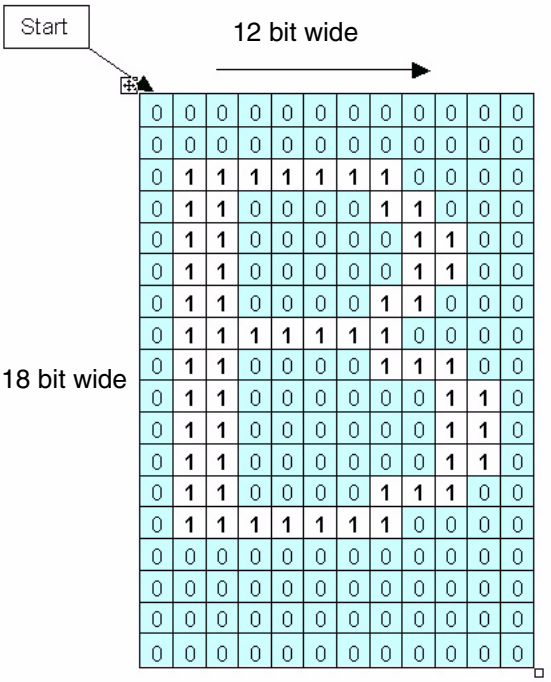

0	0	0	0	0	0	0	0	0	0	0	0
0	0	0	0	0	0	0	0	0	0	0	0
0	1	1	1	1	1	1	1	0	0	0	0
0	1	1	0	0	0	0	1	1	0	0	0
0	1	1	0	0	0	0	0	1	1	0	0
0	1	1	0	0	0	0	0	1	1	0	0
0	1	1	0	0	0	0	1	1	0	0	0
0	1	1	1	1	1	1	1	0	0	0	0
0	1	1	0	0	0	0	1	1	1	0	0
0	1	1	0	0	0	0	0	0	1	1	0
0	1	1	0	0	0	0	0	0	1	1	0
0	1	1	0	0	0	0	0	0	1	1	0
0	1	1	0	0	0	0	1	1	1	0	0
0	1	1	1	1	1	1	1	0	0	0	0
0	0	0	0	0	0	0	0	0	0	0	0
0	0	0	0	0	0	0	0	0	0	0	0
0	0	0	0	0	0	0	0	0	0	0	0
0	0	0	0	0	0	0	0	0	0	0	0

i2c comm.	i2c address	data	
WRITE	00	00	-> ram_address 0 [23:16]
WRITE	01	00	-> ram_address 0 [15 :8]
WRITE	02	00	-> ram_address 0 [7 :0]
WRITE	03	7f	-> ram_address 1 [23:16]
WRITE	04	06	-> ram_address 1 [15 :8]
WRITE	05	18	-> ram_address 1 [7 :0]
WRITE	06	60	-> ram_address 2 [23:16]
WRITE	07	c6	-> ram_address 2 [15 :8]
WRITE	08	0c	-> ram_address 2 [7 :0]
WRITE	09	61	-> ram_address 3 [23:16]
WRITE	0a	87	-> ram_address 3 [15 :8]
WRITE	0b	f0	-> ram_address 3 [7 :0]
WRITE	0c	61	-> ram_address 4 [23:16]
WRITE	0d	c6	-> ram_address 4 [15 :8]
WRITE	0e	06	-> ram_address 4 [7 :0]
WRITE	0f	60	-> ram_address 5 [23:16]
WRITE	10	66	-> ram_address 5 [15 :8]
WRITE	11	06	-> ram_address 5 [7 :0]
WRITE	12	61	-> ram_address 6 [23:16]
WRITE	13	c7	-> ram_address 6 [15 :8]
WRITE	14	f0	-> ram_address 6 [7 :0]
WRITE	15	00	-> ram_address 7 [23:16]
WRITE	16	00	-> ram_address 7 [15 :8]
WRITE	17	00	-> ram_address 7 [7 :0]
WRITE	18	00	-> ram_address 8 [23:16]
WRITE	19	00	-> ram_address 8 [15 :8]
WRITE	1a	00	-> ram_address 8 [7 :0]

Character Data RAM packing is done as follows:

1bpp NON ROTATED

23 … 16	15 … 8	7 … 0
Line 0	Line 1	
Line 2	Line 3	
Line 4	Line 5	
Line 6	Line 7	
Line 8	Line 9	
Line 10	Line 11	
Line 12	Line 13	
Line 14	Line 15	
Line 16	Line 17	

1bpp ROTATED

23 … 16	15 … 8	7 … 0
Line 0		
Line 1	Line 2	
	Line 3	
Line 4		
Line 5	Line 6	
	Line 7	
Line 8		
Line 9	Line 10	
	Line 11	

2bpp NON ROTATED

23 … 16	15 … 8	7 … 0
Line 0		
Line 1		
Line 2		
Line 3		
Line 4		
Line 5		
Line 6		
Line 7		
Line 8		
Line 9		
Line 10		
Line 11		
Line 12		
Line 13		
Line 14		
Line 15		
Line 16		
Line 17		

2bpp ROTATED

23 … 16	15 … 8	7 … 0
Line 0		
Line 1		
Line 2		
Line 3		
Line 4		
Line 5		
Line 6		
Line 7		
Line 8		
Line 9		
Line 10		
Line 11		

3bpp NON ROTATED

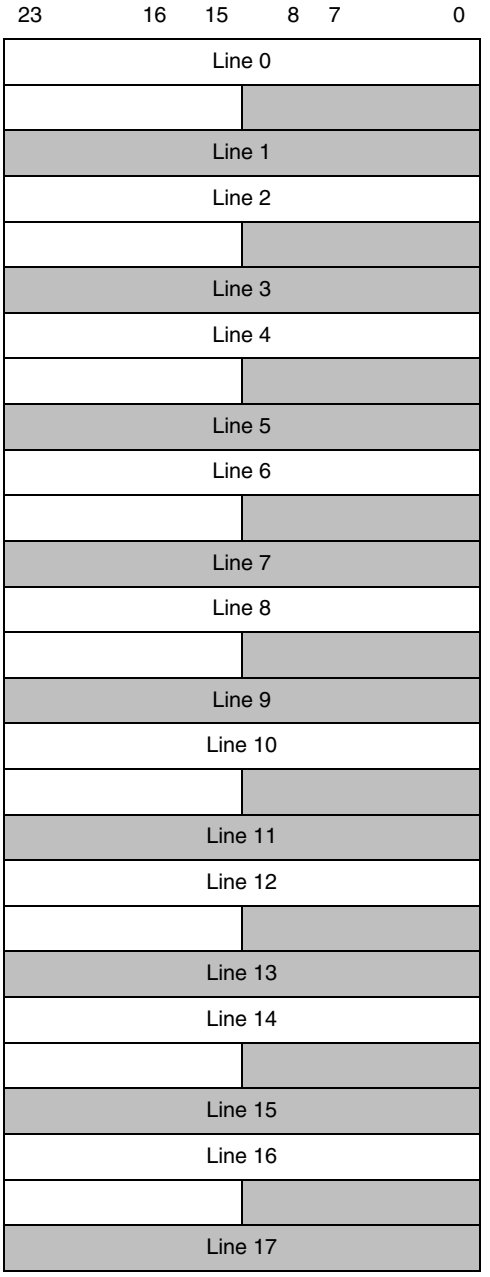

3bpp ROTATED

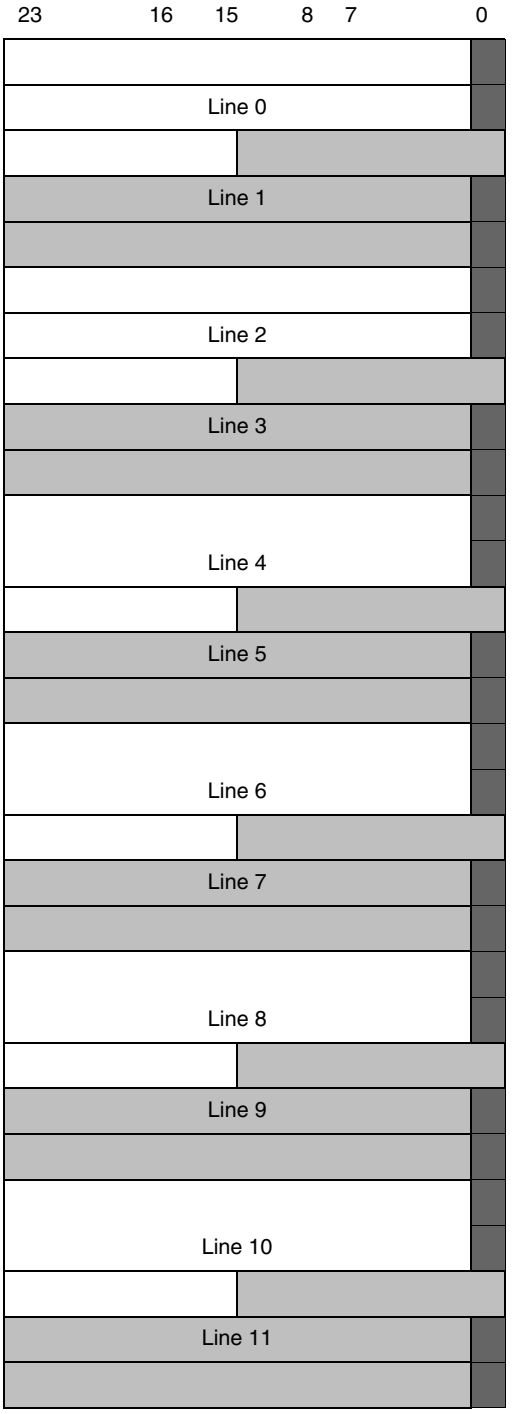

bits [2:0] are NOT USED

4bpp NON ROTATED

23 16 15 8 7 0
Line 0
Line 1
Line 2
Line 3
Line 4
Line 5
Line 6
Line 7
Line 8
Line 9
Line 10
Line 11
Line 12
Line 13
Line 14
Line 15
Line 16
Line 17

4bpp ROTATED

23 16 15 8 7 0
Line 0
Line 1
Line 2
Line 3
Line 4
Line 5
Line 6
Line 7
Line 8
Line 9
Line 10
Line 11

4.15 Flicker (FLK)

The Flicker block computes a nonlinear correlation of LCD polarity inversion patterns and the LCD output data stream and provides the correlation results as scores to the microcontroller via I2C. The MCU polls this block regularly. In response to a high score, the MCU can adjust the polarity signal generated in the TCON to cancel the visual flicker that arises from correlated pixel and polarity patterns.

Figure 16 shows a block diagram of the flicker module and its connectivity with the neighboring modules.

Figure 16: Block Diagram

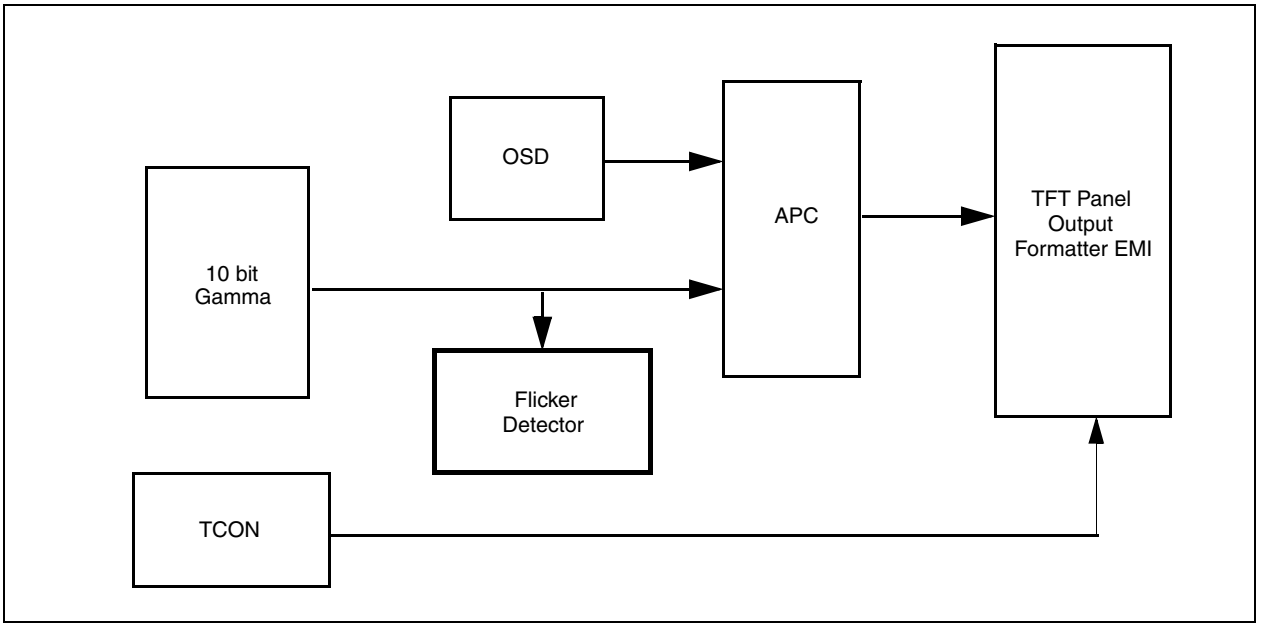

4.15.1 Function

A Walsh 8x8 function is used to compare the detected pattern, where each one of the 8 functions represents a pattern. All patterns are considered to be vertically, where horizontally the pixels are assumed to be alternating its RGB components.

Only 4 of the patterns can be measured at one time, and they are selected by means of WF_SHIFT[2:0] by programming the number of patterns shifted i.e.

- if WF_SHIFT = 00 then the 4 results are meas0, meas1, meas2, meas3;
- if WF_SHIFT = 01 then the 4 results are meas1, meas2, meas3, meas4;
- if WF_SHIFT = 05 then the 4 results are meas5, meas6, meas7, meas0; and so on.

The score that is registered at the end of a measurement is the delta intensity between the RGB components on pixels that are alternating horizontally and match one or more of the defined 8 patterns. Since the flickering effect occurs most of the time around the 50% of the color intensity, two functions are used to get the delta difference between the RGB components, one is normalized at 50%, and the other is normalized at 100%. The selection between the two can be programmed by the FLICKER_CTRL0[5] => 0/1 (100/50%) normalization.

The horizontal setting of the RGB component of each pixel is represented by the FLICKER_CTRL0[2:0], and for any pattern, maximum scores are calculated by having the correct

distribution of the color components. By default, we assume the most frequent setting is +-+ or -+-, which means FLICKER_CTRL0[2:0] are programmed to either 101 or 010.

A calculation is done after the number of frames programmed in FRAME_CNT_MAX have passed. With each frame the calculation is performed only on a horizontal portion of the image on all lines. The size of that horizontal portion (in pixels) is determined by the value programmed in the HBLOCK_SIZE included in the following formula:

2 ^ (3 + hblock_size)

For calculation of flicker patterns on the whole image, the result of this formula multiplied by FRAME_CNT_MAX should be equal to the line length (in pixels), although that is not a constraint.

By splitting the image calculation to smaller horizontal portions, the local scores are banked (saved) at the end of each portion, hence enabling a reverse pattern within a line to be detected. The smaller that horizontal portion is, the better chance of detecting pattern reversals within a line. Taking that into account, the smaller the horizontal portion is, the more frames needed to finish the full image pattern scan. The minimum horizontal portion can be 8 pixels, and the maximum can be the size of the line. Vertically, the flicker block is defined to have a resolution of 8 lines, so no programming is needed to define the vertical portion, it banks automatically every 8 lines, and it goes through all lines every frame.

The free_run/freeze_scores bit FLICKER_CTRL0[4] enables the final calculation to be fed to the I2C registers. This bit does not regulate all the internal flicker calculation, but only the update of the I2C registers.

The output results are stored in four 32 bit registers with addresses described in the table. The higher the score is, the more that pattern is present in the image (each 32 bit register represents 1 pattern). Whichever pattern is detected most, the TCON is advised to cancel the flicker by switching the pixel polarity which is the opposite of the pattern detected.

The following figure shows all patterns that can be detected by this flicker block.

Figure 17: 8x8 Walsh basis function set

+	+	+	+	+	+	+	+
+	-	+	-	+	-	+	-
+	+	-	-	+	+	-	-
+	-	-	+	+	-	-	+
+	+	+	+	-	-	-	-
+	-	+	-	-	+	-	+
+	+	-	-	-	-	+	+
+	-	-	+	-	+	+	-

Figure 18 shows an overview of the scanning of the RGB and updating of the registers diagram:

Figure 18: Scanning Overview

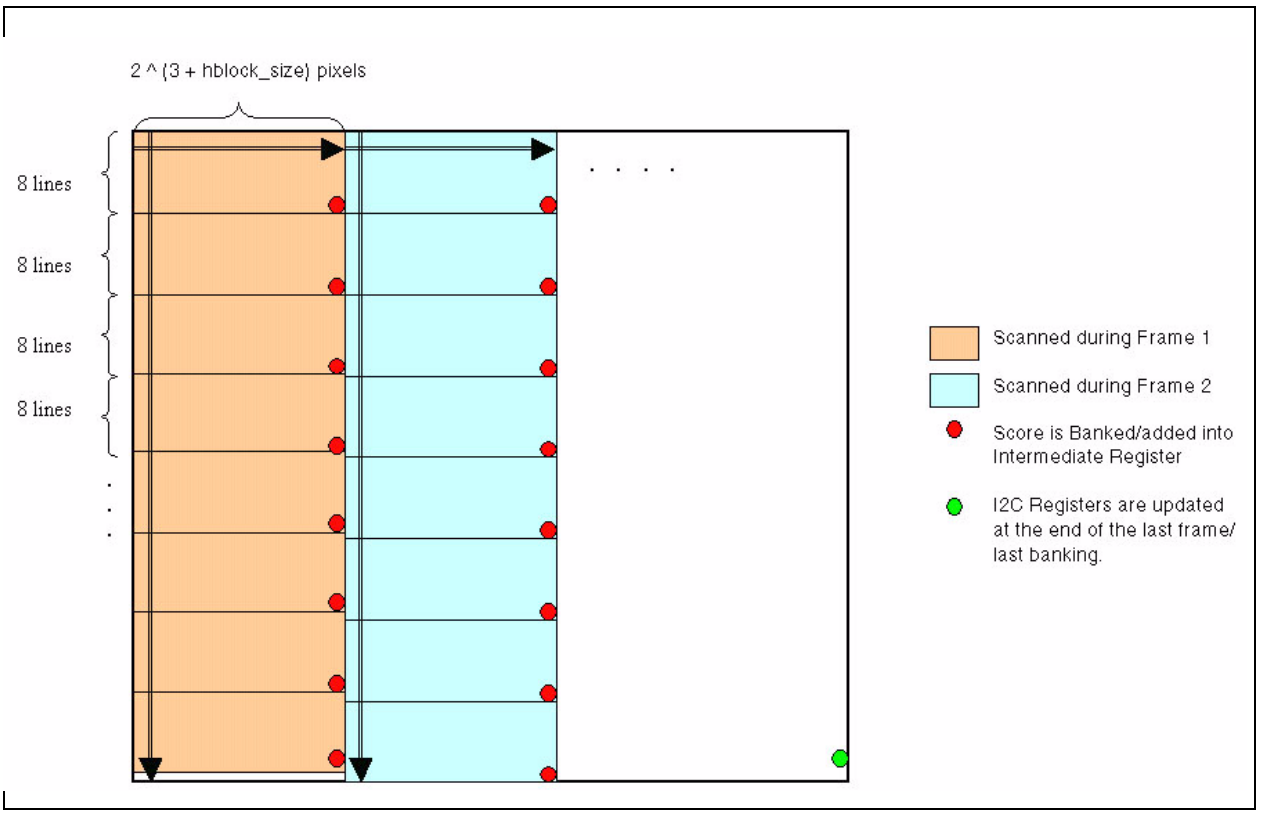

The number of frames used to complete one full measurement and update the I2C registers is programmed into FRAME_CNT_MAX as shown below.

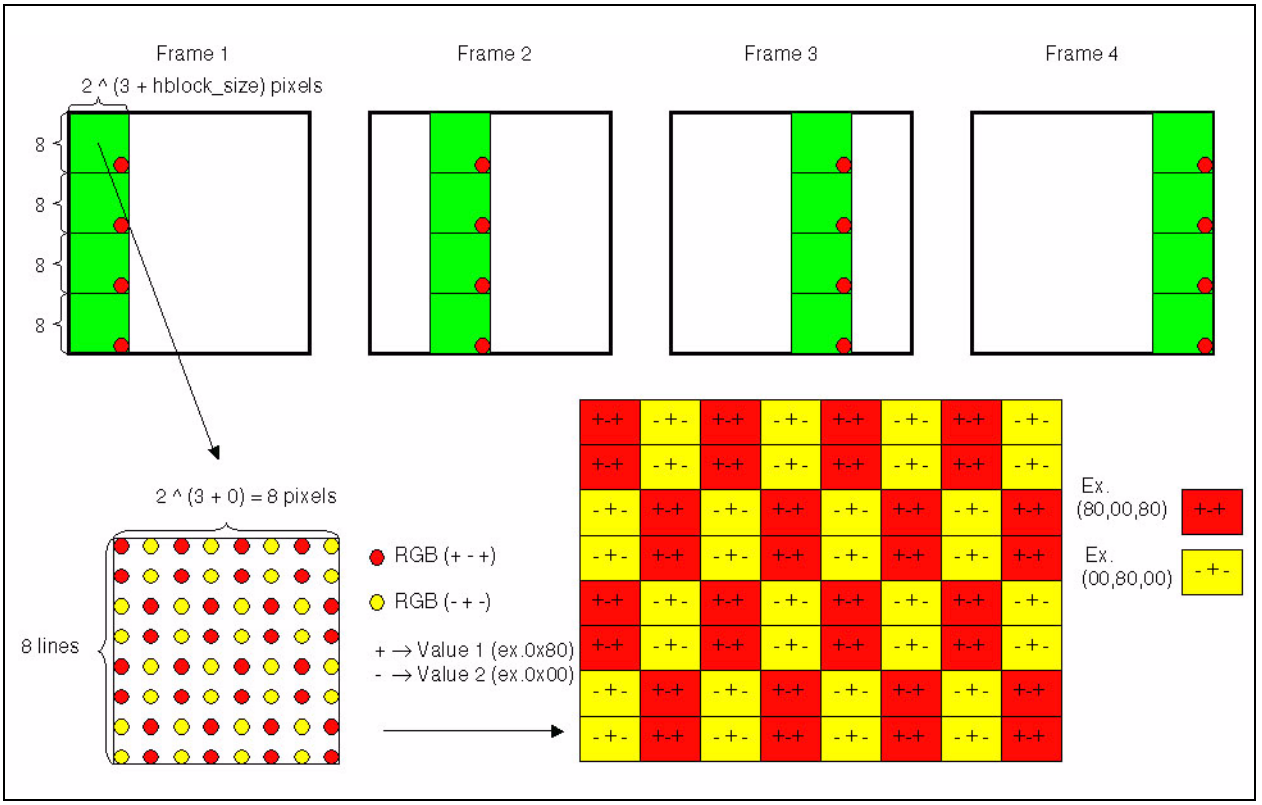

Table 31: FLK Registers (Sheet 1 of 2)

Register Name	Addr	Mode	Bits	Rst	Description
FLICKER_CTRL0	0CA1	R/W	[5]	25	0: straight line uniform function **1*: straight line hill function (normal)**
		R/W	[4]		0*: free run 1: freeze scores Set to a 1 when the micro controller is reading multibyte scores to prevent update corruption.
		R/W	[2:0]		-horizontal polarity pattern (even/odd pixels) 000: -R-G-B / +R+G+B 001: -R-G+B / +R+G-B 010: -R+G-B / +R-G+B 011: -R+G+B / +R-G-B 100: +R-G-B / -R+G+B 101*: +R-G+B / -R+G-B 110: +R+G-B / -R-G+B 111: +R+G+B / -R-G-B -If input data is in RGB format program flicker_ctrl0 to 5 or 2 to get maximum score

Table 31: FLK Registers (Sheet 2 of 2)

HBLOCK_SIZE	0CA2	R/W	[3:0]	00	Size in bits of horizontal window = 2 ^ (3+ hblock_size)
FRAME_CNT_MAX	0CA3	R/W	[7:0]	08	-Number of frames to complete one measurement -Total number of pixs in a line would be: frame_cnt_max * (2 ^ (3+ hblock_size)) -example: hblock_size = 0; frame_cnt_max = 8; means that it will take 8 frames to finish the calculation. For each frame only one portion of the image is being calculated on. The size of that portion is 2 ^ (3 + hblock_size), in this case 8 pixels. This means that the calculated line length = 8 pix window * 8 frames = 64 pixels
WF_SHIFT	0CA4	R/W	[2:0]	00	Selector of which 4 of the Walsh function is measuring
FLICKER_MEAS0	0CB1 – B4	R/W	[31:0]	00	Score reg showing pattern matching pattern 0
FLICKER_MEAS1	0CB5 – B8	R/W	[31:0]	00	Score reg showing pattern matching pattern 1
FLICKER_MEAS2	0CB9 – BC	R/W	[31:0]	00	Score reg showing pattern matching pattern 2
FLICKER_MEAS3	0CBD – C0	R/W	[31:0]	00	Score reg showing pattern matching pattern 3

4.16 Adaptive Phase Control (APC)

The APC block generates a 2-bit dither pattern for an 8-bit panel or a 4-bit dither pattern for a 6-bit panel to visually improve the amplitude resolution of the 10-bit RGB output signal.

4.16.1 Function

The heart of the APC block consists of a 32x32x4 bit lookup table (LUT). It represents one threshold matrix, which can be read using a programmable addressing technique as well as a programmable dither threshold control. The panel depth APC_CTRL0[1] should match the bit depth of the panel and is not masked by APC enable APC_CTRL0[0]. When APC_CTRL0[0] is cleared, the dither pattern is set to zero.

4.16.2 Addressing Technique

The APC block offers an I^2C programmable addressing technique to generate various temporal dither patterns. The frame offset APC_CTRL1[7:4] is a 4-bit increment value, which defines the horizontal/vertical displacement of the dither matrix from frame to frame. After the frame length APC_CTRL1[3:0] + 1 number of frames, both horizontal and vertical displacement positions will be reset to zero, *only when the frame length APC_CTRL1[3:0] > 0*.

Note: To set the frame accumulator to zero, the frame offset APC_CTRL1[7:4] *must be programmed to 0, and the frame length* APC_CTRL1[3:0] *to 1.*

The frame offset can be independently activated in the horizontal and vertical dimension using respectively APC_CTRL0[5] and APC_CTRL0[6]. In addition, APC_CTRL0[7] enables a horizontal displacement increment of the frame offset APC_CTRL1[7:4] per color component.

4.16.3 Dither threshold Control

When the panel depth APC_CTRL0[1] is set to 0, the 4-bit LUT output value maps to a 2-bit value for 8-bit panels.

APC_CTRL0[4] enables symmetric clipping of white levels respectively black levels for 6-bit panels as well as 8-bit panels.

RGB offset APC_CTRL0[3] enables a different dither amplitude offset for each color component.

When the frame inversion APC_CTRL0[2] is set to 1, the dither amplitude is inverted every other frame.

A *Matlab* file is provided to generate a variety of different threshold matrices.

Table 32: APC Registers

Register Name	Addr	Mode	Bits	Rst	Description
APC_CTRL0	0C20	R/W	[7]	00	Horizontal displacement increment of (Frame Offset) per color component 0*: disabled 1: enabled
			[6]		Vertical start position of dither matrix changes by Frame Offset 0*: disabled 1: enabled
			[5]		Horizontal start position of dither matrix changes by Frame Offset 0*: disabled 1: enabled
			[4]		Symmetric clipping for white level and black level 0*: disabled **1: enabled (normal)**
			[3]		Dither amplitude offset per color component 0*: disabled 1: enabled
			[2]		Invert dither amplitude every other frame 0*: disabled 1: enabled
			[1]		Panel Depth 0*: for true 8 bit panels 1: for 6 bit panels/8bit panels with internal dithering
			[0]		Dither amplitude 0*: amplitude set to 0 **1: enabled (normal)**
APC_CTRL1	0C21	R/W	[7:4]	00	Frame Offset This value offsets the start position of the dither matrix from frame to frame
			[3:0]		Frame Length The dither matrix start position is reset after (Frame Length +1) number of frames, only if > 0

4.17 Output Mux (OMUX)

The OMUX block formats the 1 ppc 24bpp data stream from the data path into a single or 2 ppc pixel stream for the flat panel using RSDS or LVDS signaling at the pins.

Table 33: OMUX Registers (Sheet 1 of 3)

Register Name	Addr	Mode	Bits	Rst	Description
OMUX_CTRL0	0C30	R/W	[7:4]	00	RGB data channel reordering: 0: no changes on RGB data 2: Right shift 2 bits A: Right rotate 2 bits C: Right rotate 4 bits E: Right rotate 6 bits All other values: reserved
		R/W	[3]		1: flip MSB to LSB per color (8 bits)
		R/W	[2]		1: swap R and B data
		R/W	[1]		0*: - in 1ppc, A channel active - in 2ppc, Left on A, Right on B 1: - in 1ppc, B channel active - in 2ppc, Left on B, Right on A
		R/W	[0]		0*: 1 ppc 1: 2 ppc Forced to 1 ppc in LVDS debug or RSDS mode (refer to OMUX_TEST register)
OMUX_CTRL1	0C31	R/W	[7]	00	LVDS reserved bit 0*: previous bit 1: TCON[7]
		R/W	[6]		1: LVDS channel 0 to channel 3 flip and channel 4 to channel 7 flip
		R/W	[0]		1: LVDS outputs active (see Table 34)
OMUX_CTRL2	0C32	R/W	[7]	00	1: invert LVDS channel 7
		R/W	[6]		1: invert LVDS channel 6
		R/W	[5]		1: invert LVDS channel 5
		R/W	[4]		1: invert LVDS channel 4
		R/W	[3]		1: invert LVDS channel 3
		R/W	[2]		1: invert LVDS channel 2
		R/W	[1]		1: invert LVDS channel 1
		R/W	[0]		1: invert LVDSchannel 0

Table 33: OMUX Registers (Sheet 2 of 3)

Register Name	Addr	Mode	Bits	Rst	Description		
OMUX_CTRL3	0C33	R/W	[7]	00	**0*: select RSDS even bits first (normal)** 1: select RSDS odd bits first		
		R/W	[4]		1: RSDS split buffer enable		
		R/W	[1]		0*: 128 pin mapping 1: 100 pin mapping		
		R/W	[0]		1: RSDS outputs active (see Table 34)		
OMUX_CTRL4	0C34	R/W	[7]	00	1: invert RSDS data pair 4		
		R/W	[6]		1: invert RSDS data pair 5	LVDS Debug Pattern	
		R/W	[5]		1: invert RSDS data pair 6		
		R/W	[4]		1: invert RSDS data pair 7		
		R/W	[3]		1: invert RSDS data pair 16		
		R/W	[2]		1: invert RSDS data pair 17		
		R/W	[1]		1: invert RSDS data pair 18		RSDS Debug Pattern
		R/W	[0]		1: invert RSDS data pair 20		
OMUX_CTRL5	0C35	R/W	[7]	00	1: invert RSDS data pair 11		
		R/W	[6]		1: invert RSDS data pair 10		
		R/W	[5]		1: invert RSDS data pair 9		
		R/W	[4]		1: invert RSDS data pair 8		
		R/W	[3]		1: invert RSDS data pair 0		
		R/W	[2]		1: invert RSDS data pair 1		
		R/W	[1]		1: invert RSDS data pair 2		
		R/W	[0]		1: invert RSDS data pair 3		
OMUX_CTRL6	0C36	R/W	[7]	00	1: invert RSDS data pair 19		
		R/W	[6]		1: invert RSDS data pair 22		
		R/W	[5]		1: invert RSDS data pair 23		
		R/W	[4]		1: invert RSDS data pair 25		
		R/W	[3]		1: invert RSDS data pair 24		
		R/W	[2]		1: invert RSDS data pair 15		
		R/W	[1]		1: invert RSDS data pair 14		
		R/W	[0]		1: invert RSDS data pair 13		

Table 33: OMUX Registers (Sheet 3 of 3)

Register Name	Addr	Mode	Bits	Rst	Description
OMUX_CTRL7	0C37	R/W	[7]	00	1: invert RSDS clock 1 (RSDS data pair 12)
		R/W	[6]		**0*: normal LVDS PLL clock if LVDS mode (normal)** 1: invert LVDS PLL clock if LVDS mode, or invert RSDS clock 0 (RSDS data pair 21) if RSDS mode
		R/W	[4]		1: invert LVDS output DE
		R/W	[1] [0]		TCON remapped to PWM TCON[1] = pwm_a enable TCON[0] = pwm_b enable
OMUX_HALF_LINE_L	0C38	R/W	[7:0]	00	RSDS split buffer half line address = out_hpixel/2. out_hpixel has to be multiples of 4. E.g. for SXGA panel (1280) the value is 640
OMUX_HALF_LINE_U	0C39	R/W	[3:0]	00	
OMUX_TEST	0C3A	R/W	[1]	00	1: enable RSDS debug mode
		R/W	[0]		1: enable LVDS debug mode

Table 34: OMUX_CTRL Output Modes

OUTPUT MODE	OMUX_CTRL1 [0]	OMUX_CTRL3 [0]
idle	0	0
LVDS mode	1	0
RVDS mode	0	1

The omux architecture consists of 2 main blocks as shown in Figure 19.

Figure 19: OMUX Architecture

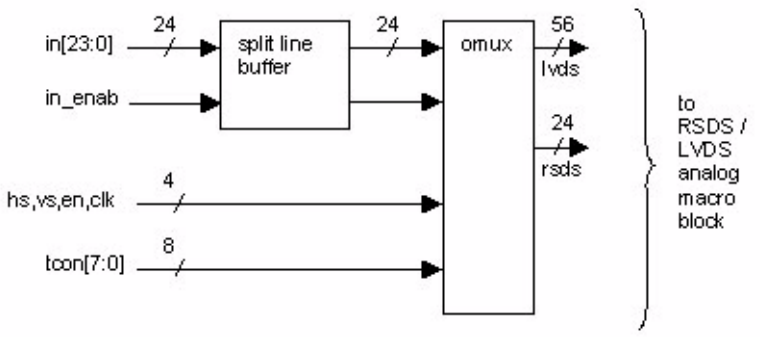

The split line buffer can delay and re-interleave the input pixel stream so that a 2 ppc output can drive both the first and the half line pixels simultaneously. This is commonly used for TCON applications where the column drivers are split into two groups (left and right halves of the screen) and driven at ½ the pixel rate. Control signals need to be similarly delayed in the TCON to account for the ½ line temporal shift. Latency is not important as long as the timing relationship between HSync, vsync, enable and data is preserved at the output.

Figure 20: Mux block diagram

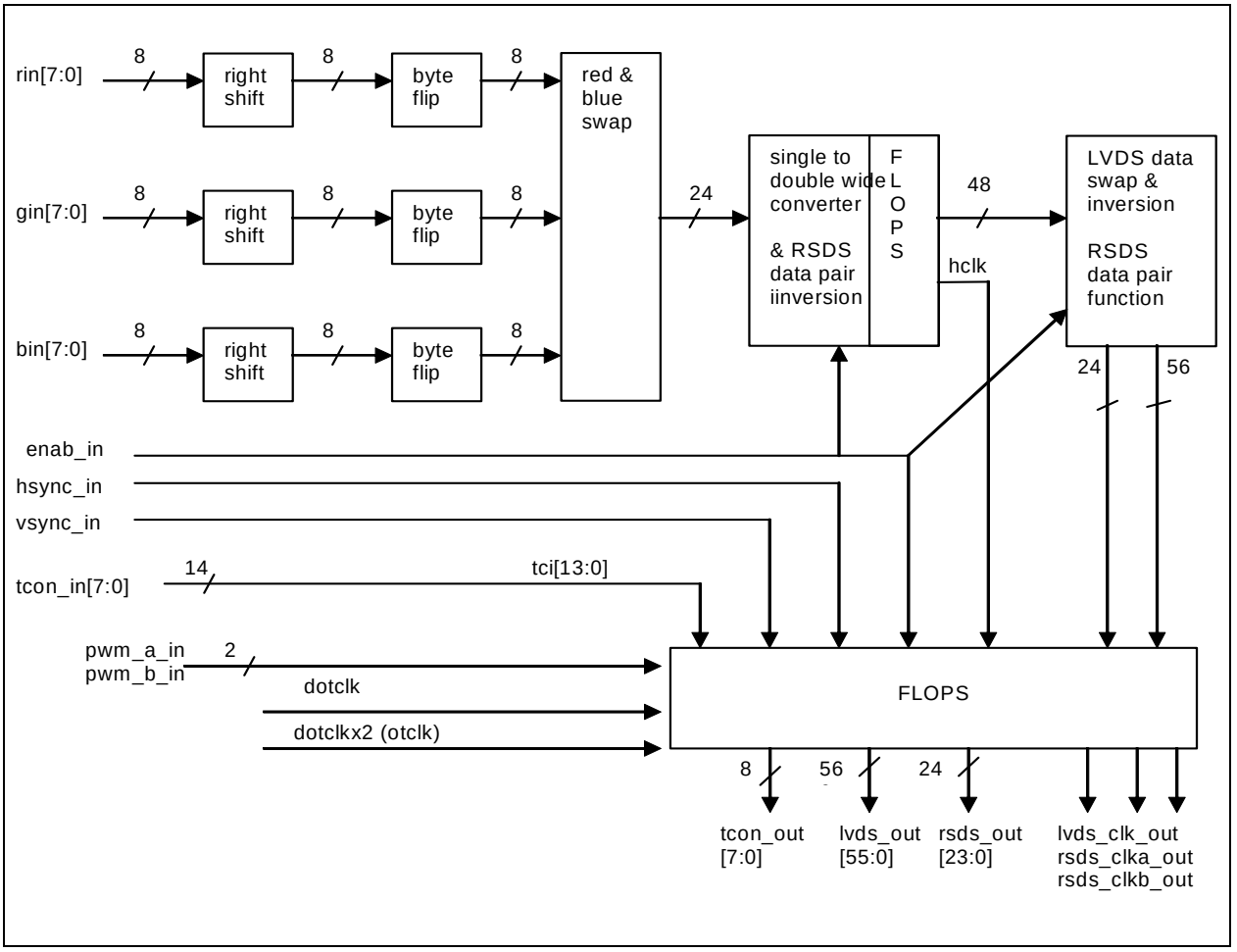

4.17.1 Output Data

LVDS

56 bits of LVDS data are arranged as shown in Table 35:

Table 35: LVDS output data

LVDS Output	LVDS Data	[6]	[5]	[4]	[3]	[2]	[1]	[0]
OUT0	**lvds_data_o[6:0]**	AR0	AR1	AR2	AR3	AR4	AR5	AG0
OUT1	**lvds_data_o[13:7]**	AG1	AG2	AG3	AG4	AG5	AB0	AB1
OUT2	**lvds_data_o[20:14]**	AB2	AB3	AB4	AB5	HS	VS	DE
OUT3	**lvds_data_o[27:21]**	AR6	AR7	AG6	AG7	AB6	AB7	AReserved
OUT4	**lvds_data_o[34:28]**	BR0	BR1	BR2	BR3	BR4	BR5	BG0
OUT5	**lvds_data_o[41:35]**	BAG1	BG2	BG3	BG4	BG5	BB0	BB1
OUT6	**lvds_data_o[48:42]**	BB2	BB3	BB4	BB5	HS	VS	DE
OUT7	**lvds_data_o[55:49]**	BR6	BR7	BG6	BG7	BB6	BB7	BReserved

MSB-LSB Flip

If omux_ctrl1[6] is equal to 1, data are flipped as follows:

lvds_data_out[27:0] =

{lvds_data_o[6:0],lvds_data_o[13:7],lvds_data_o[20:14],lvds_data_o[27:21]}

lvds_data_out[55:28] =

{lvds_data_o[34:28],lvds_data_o[41:35],lvds_data_o[48:42],lvds_data_o[55:49]}

RSDS 128 pin and 100 pin

In RSDS mode, 24/48 data bits are combined into 12/24 pairs for 1 ppc and 2 ppc modes, respectively.

The split line buffer is to be run in 2 ppc RSDS mode 128 pin only.

OUTPUT INTERFACE								
PIN # (LQFP 128)	PIN # (LQFP 100)	(RSDS INPUT NAME) PIN NAME	OUTPUT MODE					
			LVDS		RSDS (LQFP-128)		RSDS (LQFP-100)	
26		(RSDSIN0) RSDS0+	0	NOT ACTIVE	rsds_b_3	BACK-SIDE BLUE		
25		RSDS0-	0		rsds_b_3b			
24		(RSDSIN1) RSDS1+	0		rsds_b_2			
23		RSDS1-	0		rsds_b_2b			
22		(RSDSIN2) RSDS2+	0		rsds_b_1			
21		RSDS2-	0		rsds_b_1b			
20	17	(RSDSIN3) RSDS3+	0		rsds_b_0		rsds_b_3	BACK-SIDE BLUE
19	16	RSDS3-	0		rsds_b_0b		rsds_b_3b	
15		(RSDSIN4) RSDS4+	0		rsds_g_3	BACK-SIDE GREEN		
14		RSDS4-	0		rsds_g_3b			
13	12	(RSDSIN5) RSDS5+	0		rsds_g_2		rsds_b_2	BACK-SIDE BLUE
12	11	RSDS5-	0		rsds_g_2b		rsds_b_2b	
11		(RSDSIN6) RSDS6+	0		rsds_g_1			
10		RSDS6-	0		rsds_g_1b			
9	10	(RSDSIN7) RSDS7+	0		rsds_g_0		rsds_b_1	BACK-SIDE BLUE
8	9	RSDS7-	0		rsds_g_0b		rsds_b_1b	
82		(RSDSIN8) RSDS8+	0		rsds_r_4	FRONT-SIDE RED		
81		RSDS8-	0		rsds_r_4b			
84		(RSDSIN9) RSDS9+	0		rsds_r_5			
83		RSDS9-	0		rsds_r_5b			
86		(RSDSIN10) RSDS10+	0		rsds_r_6			
85		RSDS10-	0		rsds_r_6b			
88		(RSDSIN11) RSDS11+	0		rsds_r_7			
87		RSDS11-	0		rsds_r_7b			

OUTPUT INTERFACE								
PIN # (LQFP 128)	PIN # (LQFP 100)	(RSDS INPUT NAME) PIN NAME	OUTPUT MODE					
			LVDS		RSDS (LQFP-128)		RSDS (LQFP-100)	
93		(RSDSIN12) RSDS12+	0	NOT ACTIVE	rsds_clk1	FRONT-SIDE CLOCK		
92		RSDS12-	0		rsds_clk1_b			
98		(RSDSIN13) RSDS13+	0		rsds_g_4	FRONT-SIDE GREEN		
97		RSDS13-	0		rsds_g_4b			
100		(RSDSIN14) RSDS14+	0		rsds_g_5			
99		RSDS14-	0		rsds_g_5b			
102		(RSDSIN15) RSDS15+	0		rsds_g_6			
101		RSDS15-	0		rsds_g_6b			
126	99	OUT0-	lvds_0b	LVDS A CHANNEL (can be swapped with B Channel)	rsds_r_3	BACK-SIDE CLOCK	rsds_b_0	BACK-SIDE BLUE
125	98	(RSDSIN16) OUT0+	lvds_0		rsds_r_3b		rsds_b_0b	
124	97	OUT1-	lvds_1b		rsds_r_2	BACK-SIDE RED	rsds_g_3	BACK-SIDE GREEN
123	96	(RSDSIN17) OUT1+	lvds_1		rsds_r_2b		rsds_g_3b	
122	95	OUT2-	lvds_2b		rsds_r_1		rsds_g_2	
121	94	(RSDSIN18) OUT2+	lvds_2		rsds_r_1b		rsds_g_2b	
120	93	OUTCLK0-	lvds_clk_0b		rsds_r_0		rsds_g_1	
119	92	(RSDSIN20) OUTCLK0+	lvds_clk_0		rsds_r_0b		rsds_g_1b	
118	91	OUT3-	lvds_3b		rsds_b_7		rsds_g_0	
117	90	(RSDSIN19) OUT3+	lvds_3		rsds_b_7b		rsds_g_0b	
113	86	OUT4-	lvds_4b	LVDS B CHANNEL (can be swapped with A Channel)	rsds_clk0	FRONT-SIDE BLUE	rsds_clk0	BACK-SIDE CLOCK
112	85	(RSDSIN21) OUT4+	lvds_4		rsds_clk0_b		rsds_clk0_b	
111	84	OUT5-	lvds_5b		rsds_b_6		rsds_r_3	BACK-SIDE RED
110	83	(RSDSIN22) OUT5+	lvds_5		rsds_b_6b		rsds_r_3b	
109	82	OUT6-	lvds_6b		rsds_b_5		rsds_r_2	
108	81	(RSDSIN23) OUT6+	lvds_6		rsds_b_5b		rsds_r_2b	
107	80	OUTCLK1-	lvds_clk_1b		rsds_b_4		rsds_r_1	
106	79	(RSDSIN25) OUTCLK1+	lvds_clk_1		rsds_b_4b		rsds_r_1b	
105	78	OUT7-	lvds_7_b		rsds_g_7	FRONT-SIDE GREEN	rsds_r_0	
104	77	(RSDSIN24) OUT7+	lvds_7		rsds_g_7b		rsds_r_0b	

OUTPUT INTERFACE								
PIN # (LQFP 128)	PIN # (LQFP 100)	(RSDS INPUT NAME) PIN NAME	OUTPUT MODE					
			LVDS		RSDS (LQFP-128)		RSDS (LQFP-100)	
70	58	TCON0	pwm_en ? pwm_b: tcon0	TCON SIGNALS	pwm_en ? pwm_b: tcon0	TCON SIGNALS	pwm_en ? pwm_b: tcon0	TCON SIGNALS
71	59	TCON1	pwm_en ? pwm_a: tcon1		pwm_en ? pwm_a: tcon1		pwm_en ? pwm_a: tcon1	
72	60	TCON2	tcon2		tcon2		tcon2	
73	61	TCON3	tcon3		tcon3		tcon3	
74	62	TCON4	tcon4		tcon4		tcon4	
75	63	TCON5	tcon5		tcon5		tcon5	
76	64	TCON6	tcon6		tcon6		tcon6	
77	65	TCON7	tcon7		tcon7		tcon7	

Debug Mode

If LVDS debug mode is enabled (omux_test[0] = 1), LVDS output data will be set to a static 7-bit pattern which is programmed in omux_ctrl4[6:0]

If RSDS debug mode is enabled (omux_test[1] = 1), RSDS output data will be set to a static pattern which is programmed in omux_ctrl4[1:0].

4.17.2 Output Clocks

Output clock (to LVDS PLL) for both functional and test modes is the divide-by-2 clock generated inside omux. This clock is flopped on the falling edge of fsyn_outclk providing a ¼ phase offset between clock and data.

RSDS output clocks 0 & 1 are set to fsyn_outclk_div2_dly for both functional and test modes. This clock has a programmable delay offset from the fsyn_outclk_div2. This is to ensure that data will meet the setup/hold requirements at the destination (panel.)

The out_enab signal (from the TCON block) must be programmed so that its left (rising) edge is odd in 2 ppc RSDS mode.

4.17.3 Clock Sources and Timing Considerations

The omux block operates on dotclk with the exception of omux_mux which runs on fsyn_outclk. Table 2.4 describes the relationship between fsyn_outclk, fsyn_outclk_div2 and dotclk.

Table 36: Clock relationship

	1 ppc	2 ppc
fsyn_outclk_freq	2x dotclk_freq	dotclk_freq
dotclk source sel	fsyn_outclk_div2 half speed	fsyn_outclk full speed
GLBL_CLK_SRC_SEL_0[6:4]	2	3
GLBL_CLK_SRC_SEL_1[6:4]	3	3
FSYN_PR_OTCLK	2^22 * xclk_freq / dotclk_freq	2^21 * xclk_freq / dotclk_freq

4.18 Timing Controller (TCON)

The Timing Controller block provides all output timing signals for panel applications.

Features include:

- comparator, pulse and window functions
- LC polarity inversion function generator
- separate logic and output crossbars
- out_HSync, out_vsync and out_enab generation
- register shadowing

Figure 21: Output timing

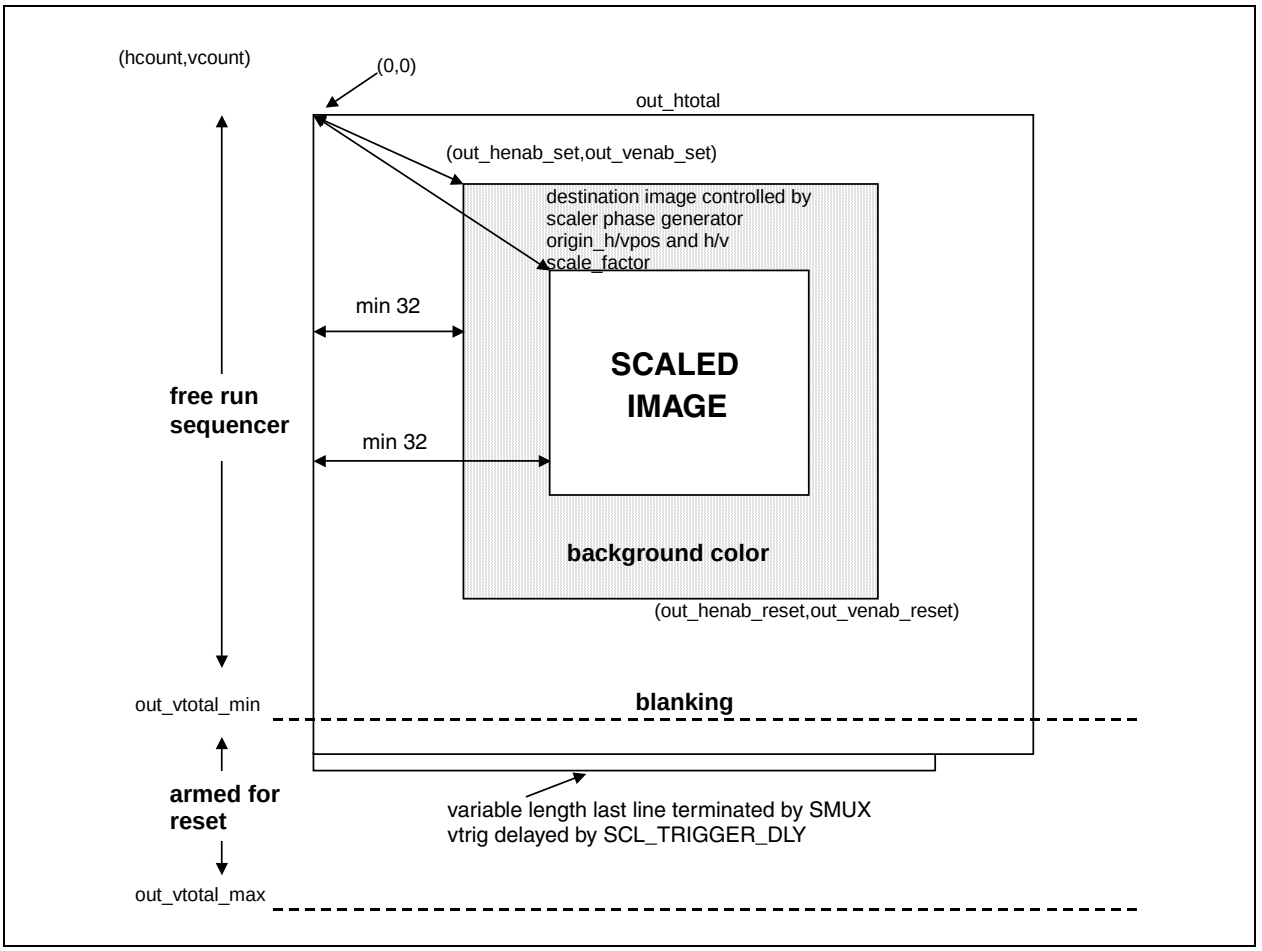

Figure 22: TCON schematic

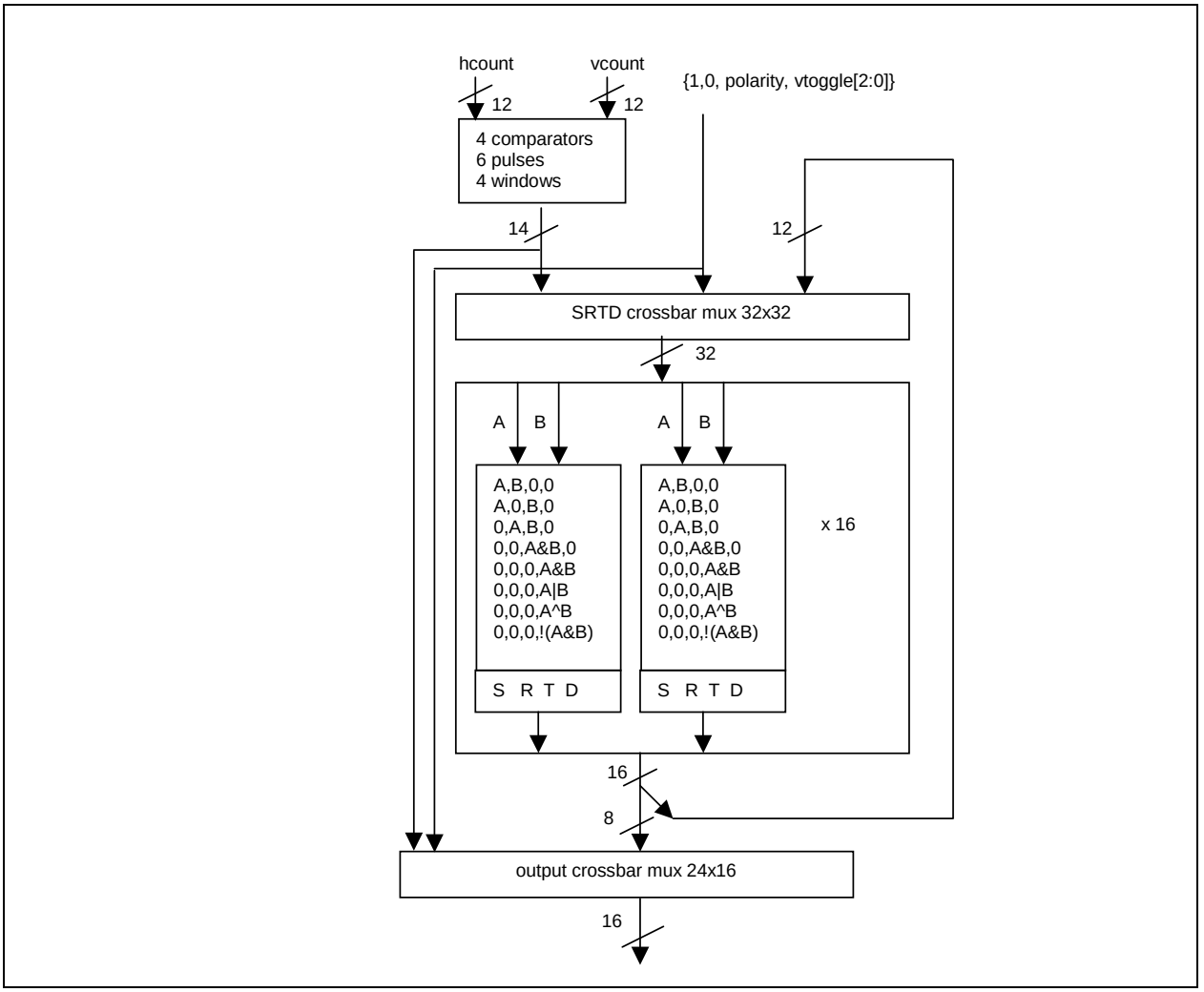

Figure 23: Toggle Generator

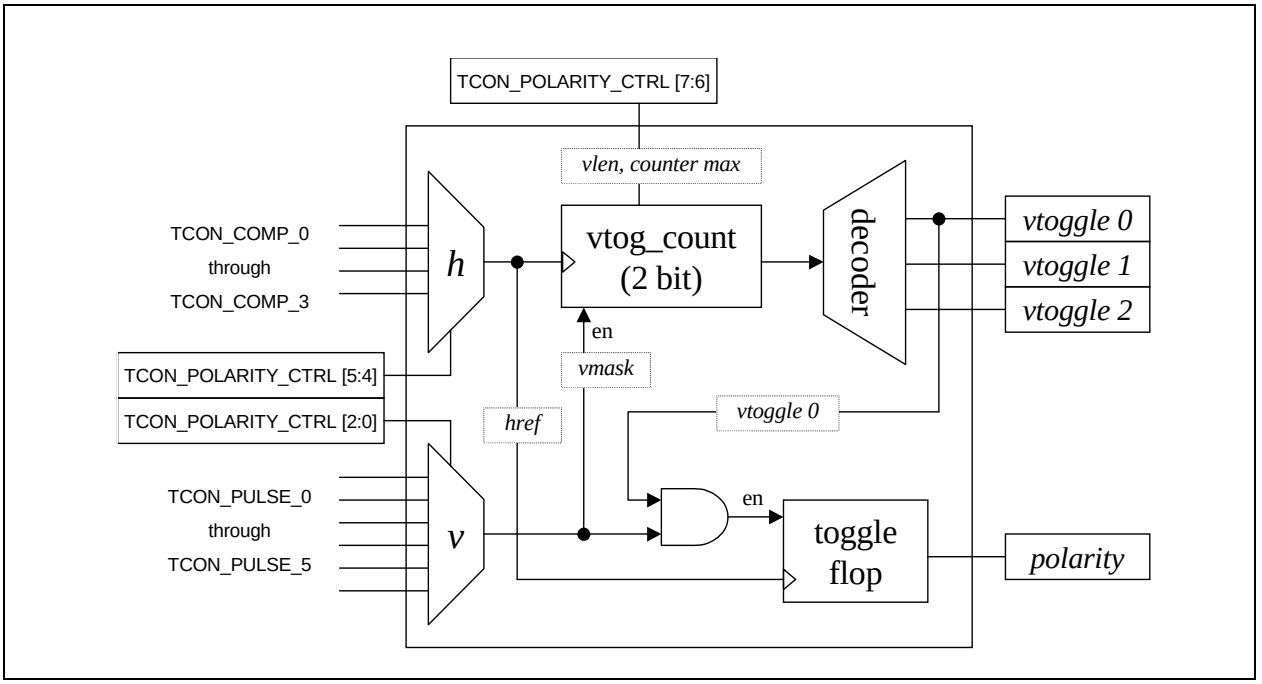

The toggle generator facilitates the synthesis of polarity signals from internal TCON signals; the horizontal TCON_COMP and vertical TCON_PULSE signals. The selected inputs supply clock and enable signals (resp.) for a 2-bit incrementing counter and a toggle flop that output 3 toggle and 1 polarity signals. The vlen variable sets the counter maximum, which controls the vertical sequence. Input and vlen selection are all in the TCON_POLARITY_CTRL register.

Common types of polarity signals are given below. For synchronization of polarity and vtog_count, a special sync mode should be entered for one frame to initialize the polarity pattern relative to the first line of vmask.

counter, decoder		**frame number**											
vlen	vtoggle	0	1	2	3	4	5	6	7	8	9	10	11
0	0	1	1	1	1	1	1	1	1	1	1	1	1
	1	0	0	0	0	0	0	0	0	0	0	0	0
	2	0	0	0	0	0	0	0	0	0	0	0	0
1	0	1	0	1	0	1	0	1	0	1	0	1	0
	1	0	1	0	1	0	1	0	1	0	1	0	1
	2	0	0	0	0	0	0	0	0	0	0	0	0
2	0	1	0	0	1	0	0	1	0	0	1	0	0
	1	0	1	0	0	1	0	0	1	0	0	1	0
	2	0	0	1	0	0	1	0	0	1	0	0	1

Table 37: Polarity programming examples.

polarity type	vmask pulse length	vlen
pol toggle every line, invert frame to frame, steady during vblank (2 frame sequence)	odd, usually vpixel+1 or vpixel-1	0
polarity toggle every other line, invert frame to frame, steady during vblank (2 frame sequence)	odd*2, usually vpixel+2 or vpixel -2	1
polarity toggle every 3rd line, invert frame to frame, steady during vblank (2 frame sequence)	odd*3	2
polarity toggle every other line, walking pattern (4 frame sequence)	odd, usually vpixel+1 or vpixel-1	1

Table 38: Video Pipeline Latency information

Block	Output pixel video pipeline latency (in per block dotclk units)
PGEN (*)	+3 (+16 vs TCON window H values)
SRGB (*)	+6 (+13 vs TCON window H values)
GAMMA	+3
OSD (*)	+3 (+4 vs TCON window H values)
APC	+1
TCON	Zero Reference
LVDS (pixel delay up to LVDS Tx)	1ppc: 5 pixels, 2ppc 6 pixels
RSDS (delay up to the RSDS pads)	1ppc: 5 pixels, 2ppc w/ split line buffer=640: 640+12 pixels

(*): Block having a window control feature

Table 39: Register Map (Sheet 1 of 7)

Register Name	Addr.	Bits	Mode	Rst	Description
TCON_CTRL	0B00	[6:4]	R/W	00	out_venab source selection **0*: out_venab generated from out_enab (normal)** 1: tcon_pgen 2: window venab[0] 3: window venab[1] 4: window venab[2] 5: window venab[3] 6-7: reserved
		[3:2]	R/W		i2c block transfer (not tcon) event selection 0*: (hcount == 0) && (vcount == 0) 1: (hcount == 0) 2: srtd0 3: srtd1
		[0]	R/W		TCON[7:0] output enable. Internal signals are always active.
TCON_POLARITY_CTRL	0B01	[7:6]	R/W	00	vlen = toggle/polarity line sequence length (desired – 1)
		[5:4]	R/W		vtoggle / polarity horizontal reference (1 of 4 comparators)
		[2:0]	R/W		polarity vmask selection 0*: pulse 0 1: pulse 1 2: pulse 2 3: pulse 3 4: pulse 4 5: pulse 5 6: pulse 0, reset vtog_count to 0 at rising edge of vmask, polarity reset to 0 7: pulse 0, resync vtog_count to 1 at rising edge of vmask, polarity reset to 0 Note: pulse type must be vertical
TCON_INV_0	0B02	[7]	R/W	00	invert output tcon7
		[6]	R/W		invert output tcon6
		[5]	R/W		invert output tcon5
		[4]	R/W		invert output tcon4
		[3]	R/W		invert output tcon3
		[2]	R/W		invert output tcon2
		[1]	R/W		invert output tcon1
		[0]	R/W		invert output tcon0

Table 39: Register Map (Sheet 2 of 7)

Register Name	Addr.	Bits	Mode	Rst	Description
TCON_INV_1	0B03	[7]	R/W	00	invert output osd_lut
		[6]	R/W		invert output pgen
		[5]	R/W		invert output gamma_2
		[4]	R/W		invert output gamma_1
		[3]	R/W		invert output srgb
		[2]	R/W		invert output out_enab
		[1]	R/W		invert output out_vsync
		[0]	R/W		invert output out_HSync
TCON_SHADOW_CTRL	0B04	[7:4]		00	shadow target 00*: comp 0 01: comp 1 02: comp 2 03: comp 3 04: pulse 0 05: pulse 1 06: pulse 2 07: pulse 3 08: pulse 4 09: pulse 5 0A: window 0 0B: window 1 0C: window 2 0D: window 3 0E: polarity 0F: reserved
		[3:2]	R/W		tcon shadow event selection 0*: (hcount == 0) && (vcount == 0) 1: (hcount == 0) 2: srtd0 3: srtd1
		[1]	R/W		shadow transfer enable - set to transfer at next event - bit is automatically cleared when transfer is complete
		[0]	R/W		shadow enable
TCON_SHADOW_BUF_0	0B05	[7:0]	R/W	00	shadow buffer 0
TCON_SHADOW_BUF_1	0B06	[4:0]	R/W	00	shadow buffer 1
TCON_SHADOW_BUF_2	0B07	[7:0]	R/W	00	shadow buffer 2
TCON_SHADOW_BUF_3	0B08	[7:0]	R/W	00	shadow buffer 3

Table 39: Register Map (Sheet 3 of 7)

Register Name	Addr.	Bits	Mode	Rst	Description
TCON_SHADOW_BUF_4	0B09	[7:0]	R/W	00	shadow buffer 4
TCON_SHADOW_BUF_5	0B0A	[3:0]	R/W	00	shadow buffer 5
TCON_SHADOW_BUF_6	0B0B	[7:0]	R/W	00	shadow buffer 6
TCON_SHADOW_BUF_7	0B0C	[4:0]	R/W	00	shadow buffer 7

TCON_COMP_0_L TCON_COMP_0_U	0B10 0B11	[7:0] [4] [3:0]	R/W R/W R/W	00 00 	count comparison value 0*: horizontal count compare 1: vertical count compare count comparison value
TCON_COMP_1_L TCON_COMP_1_U	0B12 0B13	refer to TCON_COMP_0			
TCON_COMP_2_L TCON_COMP_2_U	0B14 0B15	refer to TCON_COMP_0			
TCON_COMP_3_L TCON_COMP_3_U	0B16 0B17	refer to TCON_COMP_0			

TCON_PULSE_0_SET_L TCON_PULSE_0_SET_U	0B18 0B19	[7:0] [3:0]	R/W R/W	00 00	set point compare value set point compare value
TCON_PULSE_0_RST_L TCON_PULSE_0_RST_U	0B1A 0B1B	[7:0] [7:6] [5:4] [3:0]	R/W R/W R/W R/W	00 00 	reset point compare value for vertical pulses, 1 of 4 comparators is selected to define the horizontal change point 0*: horizontal pulse 1: vertical pulse 2,3: single point, set=h, rst=v reset point compare value
TCON_PULSE_1_SET_L TCON_PULSE_1_SET_U	0B1C 0B1D	refer to TCON_PULSE_0			
TCON_PULSE_1_RST_L TCON_PULSE_1_RST_U	0B1E 0B1F				
TCON_PULSE_2_SET_L TCON_PULSE_2_SET_U	0B20 0B21	refer to TCON_PULSE_0			
TCON_PULSE_2_RST_L TCON_PULSE_2_RST_U	0B22 0B23				
TCON_PULSE_3_SET_L TCON_PULSE_3_SET_U	0B24 0B25	refer to TCON_PULSE_0			
TCON_PULSE_3_RST_L TCON_PULSE_3_RST_U	0B26 0B27				

Table 39: Register Map (Sheet 4 of 7)

Register Name	Addr.	Bits	Mode	Rst	Description
TCON_PULSE_4_SET_L TCON_PULSE_4_SET_U	0B28 0B29	refer to TCON_PULSE_0			
TCON_PULSE_4_RST_L TCON_PULSE_4_RST_U	0B2A 0B2B				
TCON_PULSE_5_SET_L TCON_PULSE_5_SET_U	0B2C 0B2D	refer to TCON_PULSE_0			
TCON_PULSE_5_RST_L TCON_PULSE_5_RST_U	0B2E 0B2F				
TCON_WINDOW_0_LEFT_L TCON_WINDOW_0_LEFT_U	0B30 0B31	[7:0] [3:0]	R/W R/W	00 00	left edge compare count left edge compare count
TCON_WINDOW_0_RIGHT_L TCON_WINDOW_0_RIGHT_U	0B32 0B33	[7:0] [3:0]	R/W R/W	00 00	right edge compare count right edge compare count
TCON_WINDOW_0_TOP_L TCON_WINDOW_0_TOP_U	0B34 0B35	[7:0] [3:0]	R/W R/W	00 00	top edge compare count top edge compare count
TCON_WINDOW_0_BOTTOM_L TCON_WINDOW_0_BOTTOM_U	0B36 0B37	[7:0] [4] [3:0]	R/W R/W R/W	00 00 	bottom edge compare count 0*: window 1: pulse start at (left, top), end at (right, bottom) bottom edge compare count
TCON_WINDOW_1_LEFT_L TCON_WINDOW_1_LEFT_U	0B38 0B39	refer to TCON_WINDOW_0			
TCON_WINDOW_1_RIGHT_L TCON_WINDOW_1_RIGHT_U	0B3A 0B3B				
TCON_WINDOW_1_TOP_L TCON_WINDOW_1_TOP_U	0B3C 0B3D				
TCON_WINDOW_1_BOTTOM_L TCON_WINDOW_1_BOTTOM_U	0B3E 0B3F				
TCON_WINDOW_2_LEFT_L TCON_WINDOW_2_LEFT_U	0B40 0B41	refer to TCON_WINDOW_0			
TCON_WINDOW_2_RIGHT_L TCON_WINDOW_2_RIGHT_U	0B42 0B43				
TCON_WINDOW_2_TOP_L TCON_WINDOW_2_TOP_U	0B44 0B45				
TCON_WINDOW_2_BOTTOM_L TCON_WINDOW_2_BOTTOM_U	0B46 0B47				

Table 39: Register Map (Sheet 5 of 7)

Register Name	Addr.	Bits	Mode	Rst	Description
TCON_WINDOW_3_LEFT_L TCON_WINDOW_3_LEFT_U	0B48 0B49	refer to TCON_WINDOW_0			
TCON_WINDOW_3_RIGHT_L TCON_WINDOW_3_RIGHT_U	0B4A 0B4B				
TCON_WINDOW_3_TOP_L TCON_WINDOW_3_TOP_U	0B4C 0B4D				
TCON_WINDOW_3_BOTTOM_L TCON_WINDOW_3_BOTTOM_U	0B4E 0B4F				
TCON_SRTD_0	0B50	[2:0]	R/W	00	SRTD logical function 0*: f(A,B,0,0) 1: f(A,0,B,0) 2: f(0,A,B,0) 3: f(0,0,A&B,0) 4: f(0,0,0,A&B) 5: f(0,0,0,A|B) 6: f(0,0,0,A^B) 7: f(0,0,0,!(A&B))
TCON_SRTD_1	0B51				
TCON_SRTD_2	0B52				
TCON_SRTD_3	0B53				
TCON_SRTD_4	0B54				
TCON_SRTD_5	0B55				
TCON_SRTD_6	0B56				
TCON_SRTD_7	0B57				
TCON_SRTD_8	0B58				
TCON_SRTD_9	0B59				
TCON_SRTD_10	0B5A				
TCON_SRTD_11	0B5B				
TCON_SRTD_12	0B5C				
TCON_SRTD_13	0B5D				
TCON_SRTD_14	0B5E				
TCON_SRTD_15	0B5F				

Table 39: Register Map (Sheet 6 of 7)

Register Name	Addr.	Bits	Mode	Rst	Description
TCON_X_SRTD_0_A	0B80	[4:0]	R/W	00	srtd input A selection 00*: 0 01: 1 02: pulse0 03: pulse1 04: pulse2 05: pulse3 06: pulse4 07: pulse5 08: window0 09: window1 0A: window2 0B: window3 0C: vtoggle0 0D: vtoggle1 0E: vtoggle2 0F: polarity 10: srtd0 11: srtd1 12: srtd2 13: srtd3 14: srtd4 15: srtd5 16: srtd6 17: srtd7 18: srtd8 19: srtd9 1A: srtd10 1B: srtd11 1C: comp0 1D: comp1 1E: comp2 1F: comp3
TCON_X_SRTD_0_B	0B81				
TCON_X_SRTD_1_A	0B82				
TCON_X_SRTD_1_B	0B83				
TCON_X_SRTD_2_A	0B84				
TCON_X_SRTD_2_B	0B85				
TCON_X_SRTD_3_A	0B86				
TCON_X_SRTD_3_B	0B87				
TCON_X_SRTD_4_A	0B88				
TCON_X_SRTD_4_B	0B89				
TCON_X_SRTD_5_A	0B8A				
TCON_X_SRTD_5_B	0B8B				
TCON_X_SRTD_6_A	0B8C				
TCON_X_SRTD_6_B	0B8D				
TCON_X_SRTD_7_A	0B8E				
TCON_X_SRTD_7_B	0B8F				
TCON_X_SRTD_8_A	0B90				
TCON_X_SRTD_8_B	0B91				
TCON_X_SRTD_9_A	0B92				
TCON_X_SRTD_9_B	0B93				
TCON_X_SRTD_10_A	0B94				
TCON_X_SRTD_10_B	0B95				
TCON_X_SRTD_11_A	0B96				
TCON_X_SRTD_11_B	0B97				
TCON_X_SRTD_12_A	0B98				
TCON_X_SRTD_12_B	0B99				
TCON_X_SRTD_13_A	0B9A				
TCON_X_SRTD_13_B	0B9B				
TCON_X_SRTD_14_A	0B9C				
TCON_X_SRTD_14_B	0B9D				
TCON_X_SRTD_15_A	0B9E				
TCON_X_SRTD_15_B	0B9F				

Table 39: Register Map (Sheet 7 of 7)

Register Name	Addr.	Bits	Mode	Rst	Description
TCON_X_0	0BA0	[4:0]	R/W	00	output selection for tcon pin 0 00*: 0 01: 1 02: pulse0 03: pulse1 04: pulse2 05: pulse3 06: pulse4 07: pulse5 08: window0 09: window1 0A: window2 0B: window3 0C: vtoggle0 0D: vtoggle1 0E: vtoggle2 0F: polarity 10: srtd8 11: srtd9 12: srtd10 13: srtd11 14: srtd12 15: srtd13 16: srtd14 17: srtd15 18 – 1F: reserved
TCON_X_1	0BA1				
TCON_X_2	0BA2				
TCON_X_3	0BA3				
TCON_X_4	0BA4				
TCON_X_5	0BA5				
TCON_X_6	0BA6				
TCON_X_7	0BA7				
TCON_X_OHSYNC	0BA8				
TCON_X_OVSYNC	0BA9				
TCON_X_OENAB	0BAA				
TCON_X_GAMMA_A	0BAB				
TCON_X_GAMMA_B	0BAC				
TCON_X_SRGB	0BAD				
TCON_X_PGEN	0BAE				
TCON_X_OSD_LUT	0BAF				
SCL_TCON_I2C_SPARE_REG	0x0A37	[0]	R/W	0	[7:1] - Reserved [0] - LVDS_DE_SOURCE_SELECT 0: Use DE generated by TCON_OENAB 1: Use DE generated by TCON_OSD_LUT (without 16 pixels latency)

I2C shadow mode is supported for individual comparators, pulses and windows. New values are loaded into the shadow buffer area by slow I2C then the transfer command and shadow target are written into tcon_shadow_ctrl. At the next event, the data is transferred in a single clock cycle.

Table 40: Shadow Mapping

source	comparator	pulse	window
tcon_shadow_buf_0[7:0]	tcon_comp_X[7:0]	tcon_pulse_X_set[7:0]	tcon_window_X_left[7:0]
tcon_shadow_buf_1[4:0]	tcon_comp_X[12:8]	tcon_pulse_X_set[11:8]	tcon_window_X_left[11:8]
tcon_shadow_buf_2[7:0]	NA	tcon_pulse_X_rst[7:0]	tcon_window_X_right[7:0]
tcon_shadow_buf_3[6:0]	NA	tcon_pulse_X_rst[15:8]	tcon_window_X_right[11:8]
tcon_shadow_buf_4[7:0]	NA	NA	tcon_window_X_top[7:0]
tcon_shadow_buf_5[3:0]	NA	NA	tcon_window_X_top[11:8]
tcon_shadow_buf_6[7:0]	NA	NA	tcon_window_X_bottom[7:0]
tcon_shadow_buf_7[4:0]	NA	NA	tcon_window_X_bottom[12:8]

TCON Example

The following is an example of a basic TCON script:

```
WriteByte (TCON_CTRL_EN, 0x01);// enable TCON output

// vsync start at vcount = 0, end at vcount = 1
WriteWord (TCON_PULSE_0_SET, 0x0000);// pulse 0 set = 0 (12 bit value)
WriteWord (TCON_PULSE_0_RST, 0x1001);// pulse 0 reset = 0x001 (12 bit),
// vertical pulse, comparator 0

// HSync start at hcount = 4, end at hcount = 6
WriteWord (TCON_PULSE_1_SET, 0x0004);// pulse 1 set = 0x004 (12 bit value)
WriteWord (TCON_PULSE_1_RST, 0x0006);// pulse 1 reset = 0x006, horiz pulse

// data enable start at upper left (31H,1V), ending at lower right (1311H, 1025V)
// for a 1280 x 1024 output enable
WriteWord (TCON_WINDOW_0_LEFT, 0x001F);// window 0 left edge comparison
// count = 0x01F (12 bit value)
WriteWord (TCON_WINDOW_0_RIGHT, 0x051F);// right edge count = 0x51F
WriteWord (TCON_WINDOW_0_TOP, 0x0001);// top edge count = 1
WriteWord (TCON_WINDOW_0_BOTTOM, 0x0400);// bottom edge = 0x400, window type

// select pulses and window for oHSync, ovsync, oenab
WriteByte (TCON_X_OHSYNC, 0x03);// HSync on TCON pin 0 is pulse 1
WriteByte (TCON_X_OVSYNC, 0x02);// vsync on TCON pin 0 is pulse 0
WriteByte (TCON_X_OENAB, 0x08);// out enable on pin 0 is window 0
```

4.19 LVDS/RSDS Features

The LVDS/RSDS block supports the following modes:

- LVDS 1 ppc
  — 4 data channels + 1 clock channel – 40MHz - 85MHz
- LVDS 2 ppc
  — 8 data channels + 2 clock channels – 40MHz - 70MHz
- RSDS 1 ppc
  — 12 data channels + 1 clock channel – 13.5MHz - 85MHz
- RSDS 2 ppc (128 pin package only)
  — 24 data channels + 2 clock channels – 13.5MHz - 70MHz

Its features are as follows:

- Power down modes

- Programmable output swing and common mode voltage
- Per channel programmable delay
- Programmable LVDS clock output polarity

4.19.1 Output Channels

128 Pin Package

- 16 channels dedicated RSDS;
- 10 channels shared by LVDS or RSDS
  — LVDS (1ppc): 4 data + 1 clock = 5 (others are unused)
  — LVDS (2ppc): 8 data + 2 clock = 10
  — RSDS: 10 data (both 1ppc and 2ppc)

100 Pin Package

- 3 channels dedicated to RSDS,
- 10 channels shared by LVDS or RSDS
  — LVDS (1ppc): 4 data + 1 clock = 5 (others are unused)
  — LVDS (2ppc): 8 data + 2 clock = 10
  — RSDS: 10 data (1ppc on channel A only)

Table 41: LVDS/RSDS Registers (Sheet 1 of 5)

Register Name	Address	Bits	Mode	Rst	Description
ANA_LVDSANA0	0060	[7]	R/W	84	PLL Manual/Auto Select 0: manual (using ANA_LVDSANA0[1:0]) **1*: auto**
		[6]	R/W		PLL Comparator Current Select **0*: 300uA (normal)** 1: 200uA
		[5:4]	R/W		PLL Charge Pump Current Select **0*: 10uA (normal)** 1: 25uA 2: 50uA 3: 100uA (fast response)
		[1:0]	R/W		PLL Manual Range Select (enabled by ANA_LVDSANA0[7]) 0*: 25uA (slowest) **1: 75uA** 2: 125uA 3: 175uA (fastest)

Table 41: LVDS/RSDS Registers (Sheet 2 of 5)

Register Name	Address	Bits	Mode	Rst	Description
ANA_LVDSANA1	0061	[7:6]	R/W	00	Bit 3 Data Interface Delay Adjustment, see Bit 0
		[5:4]	R/W		Bit 2 Data Interface Delay Adjustment, see Bit 0
		[3:2]	R/W		Bit 1 Data Interface Delay Adjustment, see Bit 0
		[1:0]	R/W		Bit 0 Data Interface Delay Adjustment **0*: 0ps (normal)** 1: 90ps 2: 210ps 3: 460ps
ANA_LVDSANA2	0062	[7]		C0	PLL power control 0: on 1*: off
		[6]			PLL Global Data Interface Delay 0: no delay **1*: delay (normal)**
		[5:4]	R/W		Bit 6 Data Interface Delay Adjustment, see Bit 0
		[3:2]	R/W		Bit 5 Data Interface Delay Adjustment, see Bit 0
		[1:0]	R/W		Bit 4 Data Interface Delay Adjustment, see Bit 0
ANA_LVDSANA4	0064	[6:4]	R/W	01	LVDS Clock Skew LSB = 135ps (typ)
		[3]			LVDS Clock Skew Enable **0*: no delay (normal)** 1: delay
		[2]			LVDSclkout1 output polarity 0*: normal 1: invert
		[1]			LVDSclkout0 output polarity 0*: normal 1: invert
		[0]			LVDS & RSDS Master Power Control (Overrides ANA_LVDSANA5[7], ANA_LVDSANA6[7], and ANA_LVDSANA2[7])

Table 41: LVDS/RSDS Registers (Sheet 3 of 5)

Register Name	Address	Bits	Mode	Rst	Description
ANA_LVDSANA5	0065	[7]	R/W	C0	LVDS B power control (for LVDS Channel [7:4], LVDS clk 1) 0: on 1*: off
		[6]			LVDS A power control (for LVDS Channel [3:0], LVDS clk 0) 0: on 1*: off
		[5]			Output mode select 0*: RSDS (also powers down PLL) 1: LVDS
		[4:0]			LVDS Iref Bias current setting 10000: 420uA 00011: 168uA 00010: 178uA 00001: 189uA **00000*: 201uA (normal)** 11111: 202uA 11110: 216.3uA 11101: 233uA 11100: 252uA
ANA_LVDSANA7	0067	[7]	R	00	LVDS Channel [7:4] power status
		[6]			LVDS Channel [3:0] power status
		[5]			LVDS/RSDS/PLL Global Power status
		[4]			PLL powerdown status = [ANA_LVDSANA4[0] **OR** ANA_LVDSANA2[7] **OR** (NOT ANA_LVDSANA5[5])]
		[3]			PLL up status
		[2]			PLL down status
		[1:0]			PLL range status

Table 41: LVDS/RSDS Registers (Sheet 4 of 5)

Register Name	Address	Bits	Mode	Rst	Description
ANA_LVDSSW_VC	0068	[6:4]	R/W	00	LVDS & RSDS Output Common Mode Adjustment 0*: 1.093V 1: 1.119V 2: 1.145V **3: 1.171V (normal)** 4: 1.197V 5: 1.223V 6: 1.259V 7: 1.274V
		[3:0]			LVDS & RSDS Swing Adjustment **0*: 170mV (normal)** F: 475mV LSB = 20mV (typ)
ANA_LVDSCOMPV	0069	[6:4]		00	VRL regulator current adjust 0*: off **1: 18uA (normal)** 2: 36uA 3: 54uA 4: 72uA 5: 90uA 6: 108uA 7: 126uA
		[2:0]			VRH regulator current adjust 0*: off **1: 18uA (normal)** 2: 36uA 3: 54uA 4: 72uA 5: 90uA 6: 108uA 7: 126uA

Table 41: LVDS/RSDS Registers (Sheet 5 of 5)

Register Name	Address	Bits	Mode	Rst	Description	
ANA_LVDS_DLY_0	006A	[6:4]	R/W	33	LVDSDLYCH1	LVDS/RSDS output skew adjust 0: 176ps (typ) 1: 104ps (typ) 2: 73ps (typ) 3*: 50ps (typ) 4: 39ps (typ) 5: 18ps (typ) 6: 7ps (typ) **7: no delay (normal)**
		[2:0]			LVDSDLYCH0	
ANA_LVDS_DLY_1	006B	[6:4]	R/W	33	LVDSDLYCLK0	
		[2:0]			LVDSDLYCH2	
ANA_LVDS_DLY_2	006C	[6:4]	R/W	33	LVDSDLYCH4	
		[2:0]			LVDSDLYCH3	
ANA_LVDS_DLY_3	006D	[6:4]	R/W	33	LVDSDLYCH6	
		[2:0]			LVDSDLYCH5	
ANA_LVDS_DLY_4	006E	[6:4]	R/W	33	LVDSDLYCH7	
		[2:0]			LVDSDLYCLK1	
ANA_RSDS_DLY_0	0070	[6:4]	R/W	33	RSDSDLYCH1	
		[2:0]			RSDSDLYCH0	
ANA_RSDS_DLY_1	0071	[6:4]	R/W	33	RSDSDLYCH3	
		[2:0]			RSDSDLYCH2	
ANA_RSDS_DLY_2	0072	[6:4]	R/W	33	RSDSDLYCH5	
		[2:0]			RSDSDLYCH4	
ANA_RSDS_DLY_3	0073	[6:4]	R/W	33	RSDSDLYCH7	
		[2:0]			RSDSDLYCH6	
ANA_RSDS_DLY_4	0074	[6:4]	R/W	33	RSDSDLYCH9	
		[2:0]			RSDSDLYCH8	
ANA_RSDS_DLY_5	0075	[6:4]	R/W	33	RSDSDLYCH11	
		[2:0]			RSDSDLYCH10	
ANA_RSDS_DLY_6	0076	[6:4]	R/W	33	RSDSDLYCH13	
		[2:0]			RSDSDLYCH12	
ANA_RSDS_DLY_7	0077	[6:4]	R/W	33	RSDSDLYCH15	
		[2:0]			RSDSDLYCH14	

Table 42: LVDS / RSDS Power Configurations

State	PLL	LVDS Output	RSDS Output	ANA_LVDSANA4[0] Master Power Ctrl	ANA_LVDSANA5[5] Output Mode Sel	ANA_LVDSANA2[7] PLL Power Ctrl
All Off	off	off	off	1	X	X
LVDS On	on	on	off	0	1	0
RSDS On	off	off	on	0	0	X

4.20 Pulse Width Modulation (PWM)

The Pulse Width Modulation block generates two signals that can be used to control backlight inverter switching power components directly. It is derived from XCLK and can be powered up independently of the DOTCLK and INCLK domains. The frequency, duty cycle, polarity and overlap/ non-overlap are programmable. The output frequency can be free-running or locked to the output vsync signal.

Table 43: PWM Registers (Sheet 1 of 2)

Register Name	Addr	Mode	Bits	Default	Description
PWM_CTRL0	01A0	R	[7]	00	PWM status 0*: unlocked 1: locked
		R/W	[6]		0*: lock to CYCLES_PER_FRAME from the free-running state machine 1: lock to CYCLES_PER_FRAME register setting
		R/W	[5]		PWM_A polarity 0*: active low 1: active high
		R/W	[4]		PWM_B polarity 0*: active low 1: active high
		R/W	[3]		0*: normal operation 1: force both PWM outputs to polarity settings of bits 5 and 4
		R/W	[2]		0*: change period or duty cycle at the end of the current cycle 1: smooth change, period or duty cycle increment/decrement every PWM_STEP_DELAY cycle
		R/W	[1]		0*: free-running 1: lock to out_vsync
		R/W	[0]		0*: disable PWM output 1: enable PWM output
PWM_CTRL1	01A1	R/W	[7:4]	00	Lock 2nd order gain (power of 2) 0*: max 3: typical F: min.
		R/W	[3:0]		Lock gain (power of 2) 0*: max 6: typical F: min.
PWM_PERIOD_L PWM_PERIOD_U	01A2 01A3	R/W R/W	[7:0] [7:0]	00 00	Period-2 in free-running mode, in XCLKs
PWM_DUTY_L PWM_DUTY_U	01A4 01A5	R/W R/W	[7:0] [7:0]	00 00	Duty cycle of PWM in XCLKs
PWM_OVERLAP_L PWM_OVERLAP_U	01A6 01A7	R/W R/W	[7:0] [7:0]	00 00	Non-overlap of PWMs in XCLKs

Table 43: PWM Registers (Sheet 2 of 2)

Register Name	Addr	Mode	Bits	Default	Description
PWM_STEP_DELAY	01A8	R/W	[7:0]	00	In smooth change mode, the number of cycles skipped before the period/duty registers are incremented/decremented
PWM_CYCLES_PER_FRAME_L PWM_CYCLES_PER_FRAME_U	01A9 01AA	R/W R/W	[7:0] [7:0]	00 00	The number of cycles per frame in frame lock mode when not using the internally generated cycles per frame from a previous free-running mode

4.21 I²C Block Transfer (I2CBKT)

The block transfer function allows the internal I²C parallel bus to be driven by an xclk state machine to perform fast block transfers between internal addresses without any MCU software overhead.

Transfer speed is approximately 2MByte per second under typical conditions.

4.21.1 Transfer Setup and Start

Writing the bit I2CBKT_CTRL[0] to 1 initiates the transfer, according to all source and destination parameters (addresses, length):

- Length for source is programmable to allow repeated patterns/fills, such as filling an entire area with the same byte(s)
- An increment register for the destination allows to fill it only every n^{th} byte

Depending on the increment value, the destination length must be programmed as follows:

- If I2CBKT_CTRL[3:2]=0 (or =1 with I2CBKT_INC=1): DESLEN = nb of bytes to transfer
- If I2CBKT_CTRL[3:2]=1 with I2CBKT_INC>1: DESLEN = (nb of bytes to transfer * INC) - 1

The transfer can either take place immediately, or be initiated by a number of selectable events coming from SMUX or TCON, as programmed in I2CBKT_CTRL[6:4].

Transfers can occur between RAM or registers or both, but cannot take place in the own registers of the I2CBKT block (refer to Section 4.21.3: Concurrent I2C Transfers below).

Source and destination addresses cannot overlap.

Data can be either transferred from source to destination (one way) or swapped between them, depending on I2CBKT_CTRL[1].

4.21.2 Transfer Progress

The status bit I2CBKT_STATUS[0] is set to 1 by hardware as soon as the transfer actually starts, and falls back to 0 when the transfer is completed.

Note: It is the software's duty to write I2CBKT_CTRL[0] to 0 upon transfer completion, before preparing any new subsequent I2CBKT transfer.

4.21.3 Concurrent I²C Transfers

While the I2CBKT block is operating, only I²C accesses from MCU to the I2CBKT registers listed below are allowed: any I²C access to other adresses will take priority and **stop** the I2CBKT transfer in progress in an unknown state (there is no way to tell which bytes have been transferred up to that point).

It is therefore strongly recommended to wait until the I2CBKT transfer in progress is completed, before initiating any I^2C access other than polling the I2CBKT_STATUS register.

Note: In case of need, a clean way to stop the current I2CBKT transfer is to write I2CBKT_CTRL[0] to 0.

Table 44: I2C Block Transfer Registers

Register Name	Addr	Bits	Mode	Rst	Description
I2CBKT_INC	0021	[7:0]	R/W	00	destination address increment, 1 to 255 allowed
I2CBKT_SRCLEN_L	0022	[7:0]	R/W	00	length of source block, in bytes. If source length < destination length, the source data is repeated
I2CBKT_SRCLEN_U	0023	[7:0]	R/W	00	
I2CBKT_DESLEN_L	0024	[7:0]	R/W	00	length of block transfer, in bytes. Include effect of increment if I2CBKT_CTRL[3:2] = 1
I2CBKT_DESLEN_U	0025	[7:0]	R/W	00	
I2CBKT_SRC_L	0026	[7:0]	R/W	00	source starting address
I2CBKT_SRC_U	0027	[7:0]	R/W	00	
I2CBKT_DES_L	0028	[7:0]	R/W	00	destination starting address
I2CBKT_DES_U	0029	[7:0]	R/W	00	
I2CBKT_CTRL	002A	[6:4]	R/W	00	transfer start condition select (level sensitive) 0*: immediate 1: when in_henab = 0 2: when out_henab = 0 3: when in_venab = 0 4: when out_venab = 0 5: tcon_i2c_transfer = 1 (refer to TCON_CTRL[3:2])
		[3:2]	R/W		increment mode 0*: source + 1, dest + 1 1: source + 1, dest + inc (as set in I2CBKT_INC) 2: reserved 3: reserved
		[1]	R/W		0*: one way transfer from source to destination 1: swap source and destination
		[0]	R/W		0*: end of transfer, or stop transfer in progress 1: start transfer according to condition bits [6:4] Must be set and cleared by software
I2CBKT_PULSE	002B	[7:4]	R/W	31	read pulse width (reserved)
		[3:0]	R/W		write pulse width (reserved)
I2CBKT_STATUS	002C	[0]	R	00	Transfer status 0*: block transfer completed 1: block transfer in progress

EXAMPLE

Fill every other byte of the entire OSD_RAM with a byte previously stored at address 4700:

I2CBKT_SRC_L = 00, I2CBKT_SRC_U = 47: start address where the data is located

I2CBKT_SRCLEN_L = 01, I2CBKT_SRCLEN_U = 00: only 1 byte to transfer from source

I2CBKT_DES_L = 00, I2CBKT_DES_U = 17: destination start address (OSD_RAM) where the data will be written

I2CBKT_INC = 02: skip every other byte

I2CBKT_DESLEN_L = FF, I2CBKT_DESLEN_U = 5F: (46FF-1700+1) = 12288 bytes to transfer means destination length = (12288 x increment) - 1 = 5FFF

I2CBKT_CTRL = 05: immediate transfer with source+1 and destination+2

4.22 I²C Registers and RAM Addresses

The I²C own address of the device (also called “ADE_ID”) is **A8h**.

4.22.1 I²C Transfer Format

All I²C addresses, registers and RAM, are 16-bit wide.

Address LSB must be transferred first, followed by MSB then the data, as in the following I²C write access example:

Start	ADE_ID (A8)	*Ack*[a]	Register Address **LSB**	*Ack*	Register Address **MSB**	*Ack*	Data 1	*Ack*	...further data...	Stop

a. All *Ack* bits are returned by the device.

4.22.2 Dedicated RAM Areas per Block

Table 45: I²C RAM Addresses

Name	Description	Block	Clock Condition[a]	Start Addr	End Addr	Size	Size in Bytes
GAM_R	Gamma Red LUT	GAMMA	dotclk >= sclk	1000	10FF	256x8b	256
GAM_G	Gamma Green LUT			1100	11FF	256x8b	256
GAM_B	Gamma Blue LUT			1200	12FF	256x8b	256
OSD_RAM	Characters RAM Area	OSD		1700	46FF	4096x24b	12288
OSD_CLUT	Color LUT			4700	47FF	64x32b	256
SCL_RAM_1	Line Buffers	SCL	sclk >= xclk	9000	A700	1024x42b	n/a
SCL_RAM_2				A800	BFFF	1024x42b	n/a
OMUX	In RSDS Mode only[b]	OMUX	dotclk >= sclk	E300	F1FF	640x48b	3840

a. The relevant clock condition **must** be met to grant access to that block’s registers and RAM.

b. In RSDS mode: OMUX uses this RAM area for internal computation purposes, it should **not** be otherwise modified by any means.
In LVDS mode, this RAM is free of use, and can be used as a temporary storage or working area for example.

4.22.3 Multi-byte Registers

Data are read back in the order of how they were written.

All values spread out over several registers are organised as follows:

32-bit values		24-bit values		16-bit values	
_0	LSB	_L or _0	LSB	_L	LSB
_1		_M or _1	MSB	_U	USB
_2		_U or _2	USB		
_3	USB				

They are all LSB aligned, except for OMUX which is MSB aligned.

When the RAM width is not a multiple of 8, zeros will be returned for the non-meaningful bits.

Example of LSB aligned RAM

If addresses 9000-9005 are written with the values F0-F5, the contents of SCL_RAM_1 (at word address 0) are as follows:

[41:40]	[39:32]	[31:24]	[23:16]	[15:8]	[7:0]
01	F4	F3	F2	F1	F0

A read from address 9000 will return F0; a read from address 9001 will return F1, etc.

Note: A read from 9005 returns the value 01 (as opposed to F5) since there are only 2 meaningful bits of data at this address.

Example of MSB aligned RAM (OMUX only)

If addresses E300-E305 are written with the values F0-F5 respectively, the contents of the OMUX RAM (at word address 0) are as follows:

[47:40]	[39:32]	[31:24]	[23:16]	[15:8]	[7:0]
F0	F1	F2	F3	F4	F5

A read from address E300 will return F0, a read from address E301 will return F1, and so on.

5 Electrical Specifications

5.1 Absolute Maximum Ratings

Symbol	Parameter	Min.	Typ.	Max.	Unit
AVDD DVDD18 XVDD18 OVDD18 PVDD18 PLLVDD18	1.8V Supply Voltages			1.95	V
DVDD33	3.3V Supply Voltages			3.6	V
V_{ESD}	Electrostatic Protection (Human Body Model)			2	kV
$V_{IN5VTOL}$	Max voltage on 5 volt tolerant input pins			6.1	V
$V_{IN3VTOL}$	Max voltage on 3.3 volt tolerant input pins			4.1	V
T_{STG}	Storage temperature	-40		+150	ºC
T_{OPER}	Operating Temperature	0		+70	ºC
T_J	Operating Junction Temperature	-40		+125	ºC

5.2 Nominal Operating Conditions

Symbol	Parameter	Min.	Typ.	Max.	Unit
AVDD DVDD18 XVDD18 OVDD18 PVDD18 PLLVDD18	1.8V Supply Voltages	1.71	1.8	1.89	V
DVDD33	3.3V Supply Voltages	3.135	3.3	3.465	V
f_{XTAL}	Crystal Frequency		27		MHz
$P_{XGA75LVDS}$	Power Consumption using XGA75Hz input and driving a XGA LVDS panel (1 pixel per clock)		0.75		W
$P_{XGA75RSDS}$	Power Consumption using XGA75Hz input and driving a XGA RSDS panel (1 pixel per clock)		0.70		W
$P_{SXGA75LVDS}$	Power Consumption using SXGA75Hz input and driving a SXGA LVDS panel (2 pixels per clock)		1.10		W
$P_{SXGA75RSDS}$	Power Consumption using SXGA75Hz input and driving a SXGA RSDS panel (2 pixels per clock)		1.00		W
P_{PWRDN}	Power Consumption in Power Down Mode	0.04	0.05		W
$I_{AVDDX75LVDS}$	AVDD Supply Current, (XGA75Hz input and XGA LVDS panel)		220		mA
$I_{DVDD18X75LVDS}$	DVDD18 Supply Current, (XGA75Hz input and XGA LVDS panel)		150		mA
$I_{XVDD18X75LVDS}$	XVDD18 Supply Current, (XGA75Hz input and XGA LVDS panel)		2.5		mA
$I_{OVDD18X75LVDS}$	OVDD18 Supply Current, (XGA75Hz input and XGA LVDS panel)		35		mA

Symbol	Parameter	Min.	Typ.	Max.	Unit
$I_{PVDD18X75LVDS}$	PVDD18 Supply Current, (XGA75Hz input and XGA LVDS panel)		5		mA
$I_{PLLVDD18X75LVDS}$	PLLVDD18 Supply Current, (XGA75Hz input and XGA LVDS panel)		2.5		mA
$I_{DVDD33X75LVDS}$	DVDD33 Supply Current, (XGA75Hz input and XGA LVDS panel)		2		mA
$I_{AVDDX75RSDS}$	AVDD Supply Current, (XGA75Hz input and XGA RSDS panel)		220		mA
$I_{DVDD18X75RSDS}$	DVDD18 Supply Current, (XGA75Hz input and XGA RSDS panel)		150		mA
$I_{XVDD18X75RSDS}$	XVDD18 Supply Current, (XGA75Hz input and XGA RSDS panel)		2.5		mA
$I_{OVDD18X75RSDS}$	OVDD18 Supply Current, (XGA75Hz input and XGA RSDS panel)		10		mA
$I_{PVDD18X75RSDS}$	PVDD18 Supply Current, (XGA75Hz input and XGA RSDS panel)		5		mA
$I_{PLLVDD18X75RSDS}$	PLLVDD18 Supply Current, (XGA75Hz input and XGA RSDS panel)		2.5		mA
$I_{DVDD33X75RSDS}$	DVDD33 Supply Current, (XGA75Hz input and XGA RSDS panel)		2		mA
$I_{AVDDSX75LVDS}$	AVDD Supply Current, (SXGA75Hz input and SXGA LVDS panel)		225		mA
$I_{DVDD18SX75LVDS}$	DVDD18 Supply Current, (SXGA75Hz input and SXGA LVDS panel)		260		mA
$I_{XVDD18SX75LVDS}$	XVDD18 Supply Current, (SXGA75Hz input and SXGA LVDS panel)		2.5		mA
$I_{OVDD18SX75LVDS}$	OVDD18 Supply Current, (SXGA75Hz input and SXGA LVDS panel)		70		mA
$I_{PVDD18SX75LVDS}$	PVDD18 Supply Current, (SXGA75Hz input and SXGA LVDS panel)		5		mA
$I_{PLLVDD18SX75LVDS}$	PLLVDD18 Supply Current, (SXGA75Hz input and SXGA LVDS panel)		2.5		mA
$I_{DVDD33SX75LVDS}$	DVDD33 Supply Current, (SXGA75Hz input and SXGA LVDS panel)		3.5		mA
$I_{AVDDSX75RSDS}$	AVDD Supply Current, (SXGA75Hz input and SXGA RSDS panel)		225		mA
$I_{DVDD18SX75RSDS}$	DVDD18 Supply Current, (SXGA75Hz input and SXGA RSDS panel)		250		mA
$I_{XVDD18SX75RSDS}$	XVDD18 Supply Current, (SXGA75Hz input and SXGA RSDS panel)		2.5		mA
$I_{OVDD18SX75RSDS}$	OVDD18 Supply Current, (SXGA75Hz input and SXGA RSDS panel)		20		mA
$I_{PVDD18SX75RSDS}$	PVDD18 Supply Current, (SXGA75Hz input and SXGA RSDS panel)		5		mA
$I_{PLLVDD18SX75RSDS}$	PLLVDD18 Supply Current, (SXGA75Hz input and SXGA RSDS panel)		2.5		mA
$I_{DVDD33SX75RSDS}$	DVDD33 Supply Current, (SXGA75Hz input and SXGA RSDS panel)		3.5		mA

5.3 Preliminary Thermal Data

Symbol	Parameter	Min.	Typ.	Max.	Unit
R_{thJA}	Junction-to-Ambient Thermal Resistance (LQFP100): Soldered exposed pad Unsoldered exposed pad			 20 29	ºC/W
R_{thJA}	Junction-to-Ambient Thermal Resistance (LQFP128): Soldered exposed pad Unsoldered exposed pad			 25.1 32.6	ºC/W

5.4 Preliminary DC Specifications

Test Conditions: DVDD33 = 3.3V, DVDD18 = AVDD = OVDD18 = PVDD18 = XVDD18 = PLLVDD18 = 1.8V and T_{AMB} = 25ºC

5.4.1 LVTTL 5-Volt Tolerant Inputs with Hysteresis

HSYNC, VSYNC, SCL, RESETN, EXT_SOG, RESETN2, XCLKEN

Symbol	Parameter	Condition	Min.	Typ.	Max.	Unit
V_{IH}	High Level Input Voltage		2.0			V
V_{IL}	Low Level Input Voltage				0.8	V
V_{HYST}	Schmitt Trigger Hysteresis		0.4			V

5.4.2 LVTTL 3-Volt Tolerant Inputs with Hysteresis

TST_SCAN

Symbol	Parameter	Condition	Min.	Typ.	Max.	Unit
V_{IH}	High Level Input Voltage		2.0			V
V_{IL}	Low Level Input Voltage				0.8	V
V_{HYST}	Schmitt Trigger Hysteresis		0.4			V

5.4.3 LVTTL 5-Volt Tolerant I/O with Hysteresis

SDA, SDA2

Symbol	Parameter	Condition	Min.	Typ.	Max.	Unit
V_{IH}	High Level Input Voltage		2.0			V
V_{IL}	Low Level Input Voltage				0.8	V
V_{HYST}	Schmitt Trigger Hysteresis		0.4			V
V_{OH}	High Level Output Voltage		3.15			V
V_{OL}	Low Level Output Voltage				0.15	V
I_{OUT}	Output Current				8	mA

5.4.4 LVTTL 3-Volt Tolerant I/O

XCLK

Symbol	Parameter	Condition	Min.	Typ.	Max.	Unit
V_{IH}	High Level Input Voltage		2.0			V
V_{IL}	Low Level Input Voltage				0.8	V
V_{OH}	High Level Output Voltage		3.15			V
V_{OL}	Low Level Output Voltage				0.15	V
I_{OUT}	Output Current				8	mA

5.4.5 LVTTL 3-Volt Tolerant I/O

TCON [7:0]

Symbol	Parameter	Condition	Min.	Typ.	Max.	Unit
V_{IH}	High Level Input Voltage		2.0			V
V_{IL}	Low Level Input Voltage				0.8	V
V_{OH}	High Level Output Voltage		3.15			V
V_{OL}	Low Level Output Voltage				0.15	V
I_{OUT}	Output Current				2	mA

5.5 LVDS Outputs

OUT [7:0], OUT [7:0]b, OUTCLK [1:0], OUTCLK [1:0]b

Symbol	Parameter	Condition	Min.	Typ.	Max.	Unit
$V_{LVDS\text{-}DIFF}$	LVDS Differential Output Voltages	R_L=100 ohm	250	345	450	mV
$V_{LVDS\text{-}CM}$	LVDS Common Mode Output Voltage	R_L=100 ohm	1.125	1.25	1.375	V
$\Delta_{LVDS\text{-}DIFF}$	Change in $V_{LVDS\text{-}DIFF}$ between complimentary output states	R_L=100 ohm			35	mV
$\Delta_{LVDS\text{-}CM}$	Change in $V_{LVDS\text{-}CM}$ between complimentary output states	R_L=100 ohm			35	mV

5.6 RSDS Outputs

RSDS [7:0], RSDS [7:0]b, OUT [7:0], OUT [7:0]b, OUTCLK [1:0], OUTCLK [1:0]b, RSDS [15:8], RSDS [15:8]b

Symbol	Parameter	Condition	Min.	Typ.	Max.	Unit
$V_{RSDS\text{-}DIFF}$	RSDS Differential Output Voltage	RSDS mode	100	200	400	mV

Symbol	Parameter	Condition	Min.	Typ.	Max.	Unit
$V_{RSDS-CM}$	RSDS Common Mode Output Voltage	680 ohm + 50 ohm external termination to 1.3V	1.1	1.3	1.5	V
Trise, Tfall	RSDS Transition Time to 90%	C_L = 30pF			3	ns

5.7 ADC Characteristics

Symbol	Parameter	Condition	Min.	Typ.	Max.	Unit
INL	ADC Integral Nonlinearity (7-bit)	Without Dithering	0.6	1.0	1.5	LSB
DNL	ADC Differential Nonlinearity (7-bit)	Without Dithering No missing codes	0.3	0.6	1.0	LSB
Σ_{NOB}	Effective Number of Bits	V_{INADC} = 1MHz sinusoidal, 0.5V_{PP} - 1V_{PP} $F_{SAMPLING}$ = 20 MHz	6.2	6.6	6.8	Bit
THD	Total Harmonic Distortion	V_{INADC} = 1MHz sinusoidal, 0.5V_{PP} - 1V_{PP} $F_{SAMPLING}$ = 20 MHz	-48	-44	-41	dB
V_{INADC}	ADC Input Voltage Range		0.5		1	Vp-p
R_{INADC}	ADC Input Resistance			200		Kohms
C_{INADC}	ADC Input Capacitance			12		pF
F_{ADC}	ADC Sample Frequency		20		140	MHz
ADC gain step	ADC Gain Step Size			0.05		dB
ADC offset step	ADC Offset Step Size			2.9		mV

6 Package Mechanical Data

6.1 100 Pin LQFP

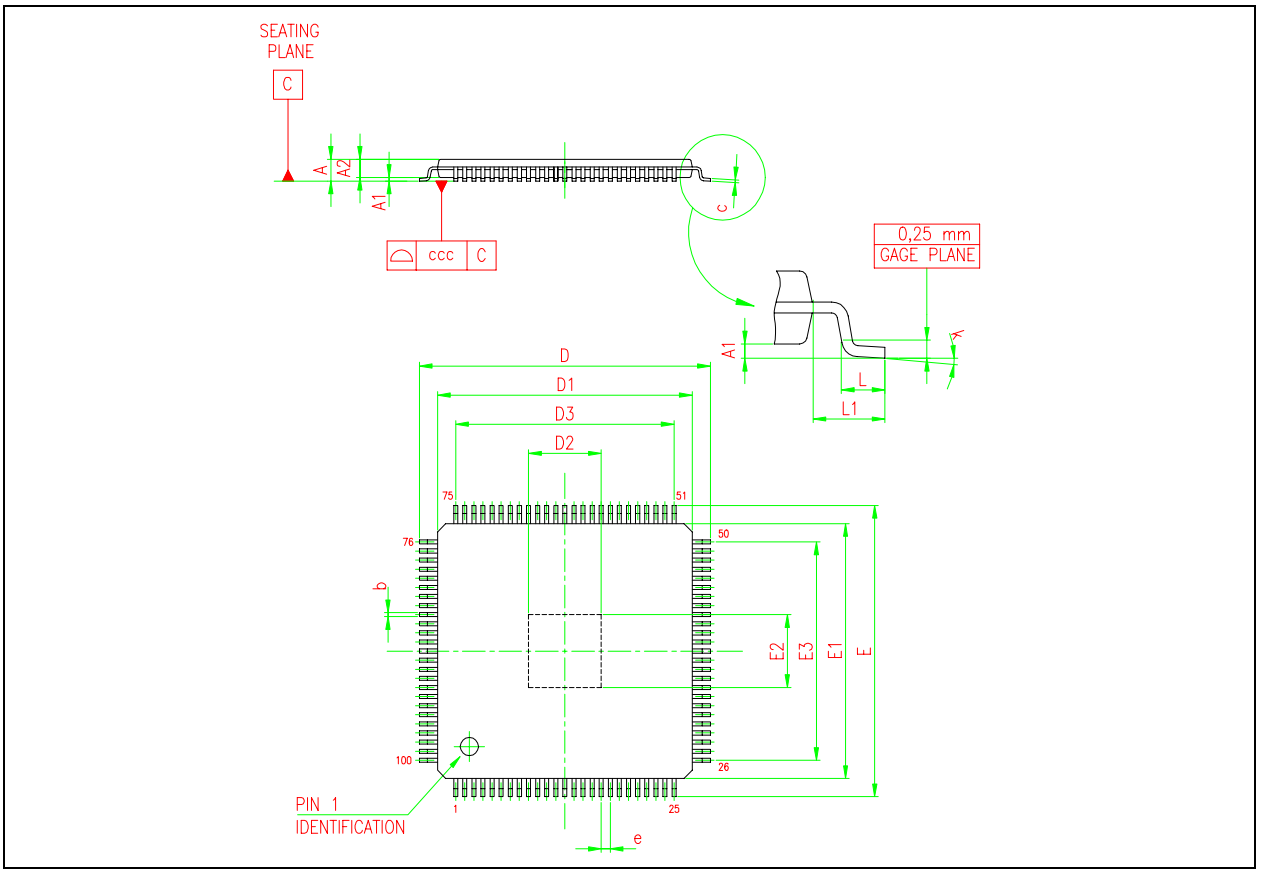

Note: The Pin 1 corner is at an angle, while the others are 90°.

	Dimensions (mm)			Dimensions (inches)		
	Min.	Typ.	Max.	Min.	Typ.	Max.
A			1.60			0.063
A1	0.05		0.15	0.002		0.006
A2	1.35	1.40	1.45	0.053	0.055	0.057
b	0.17	0.22	0.27	0.007	0.009	0.011
c	0.09		0.20	0.004		0.008
D	15.80	16.00	16.20	0.622	0.63	0.638
D1	13.80	14.00	14.20	0.543	0.551	0.559
D2	2.00	3.9		0.079	0.154	
D3		12.00			0.472	
E	15.80	16.00	16.20	0.622	0.63	0.638
E1	13.80	14.00	14.20	0.543	0.551	0.559
E2	2.00	3.9		0.079	0.154	
E3		12.00			0.472	
e		0.50			0.02	
L	0.45	0.60	0.75	0.018	0.024	0.03

	Dimensions (mm)			Dimensions (inches)		
	Min.	Typ.	Max.	Min.	Typ.	Max.
L1		1.00			0.039	
K	0	3.5	7	0	0.138	0.276
ccc			0.08			0.003

6.2 128 Pin LQFP

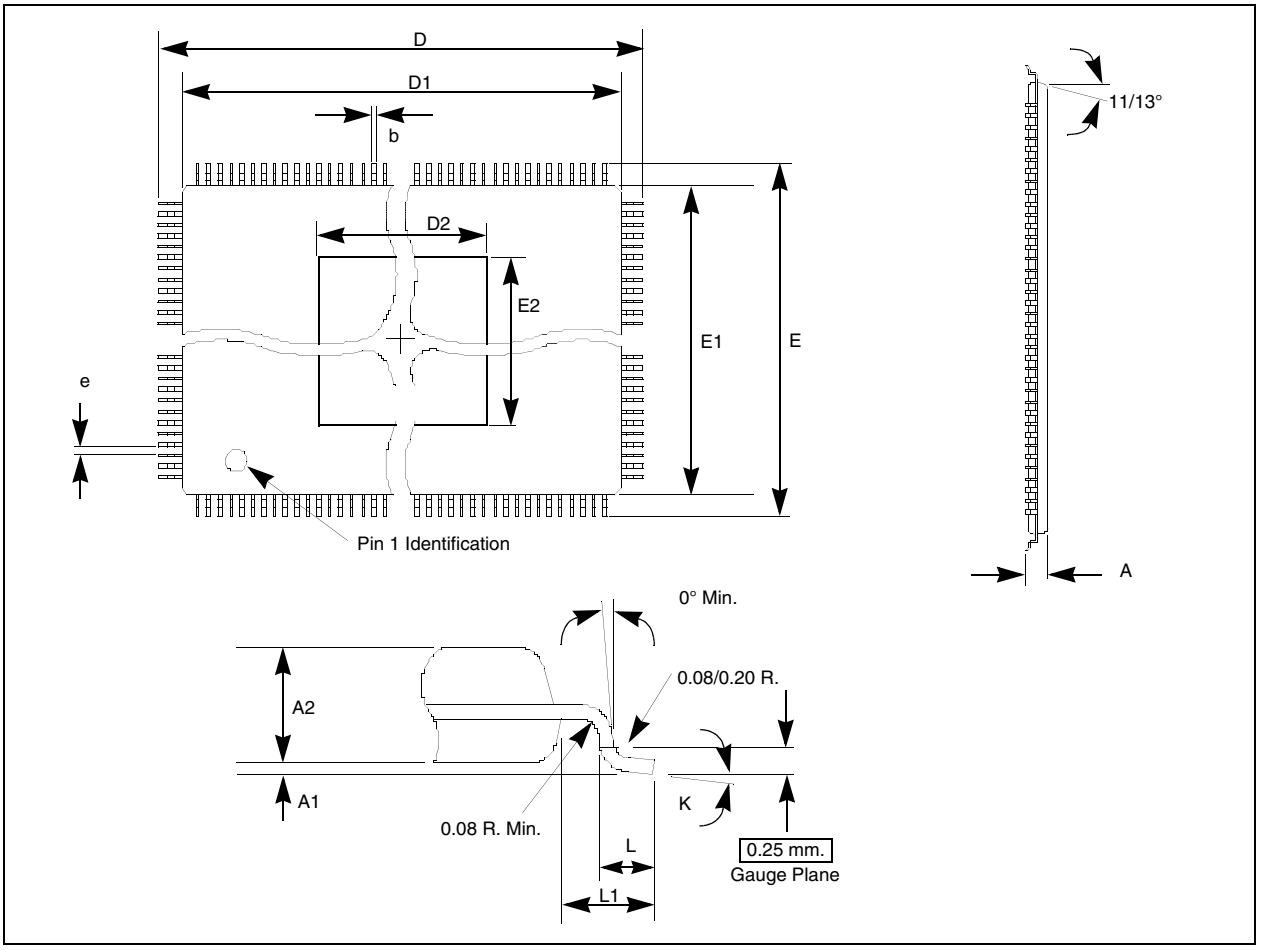

Note: The Pin 1 corner is at an angle, while the others are 90°.

	Dimensions (mm)			Dimensions (inches)		
	Min.	Typ.	Max.	Min.	Typ.	Max.
A			1.600			0.063
A1			0.150			0.006
A2	1.400	1.350	1.450	0.055	0.053	0.057
b	0.220	0.170	0.270	0.009	0.007	0.011
D	22.000			0.866		
D1	20.000			0.787		
D2		3.9			0.154	

	Dimensions (mm)			Dimensions (inches)		
	Min.	Typ.	Max.	Min.	Typ.	Max.
E	16.000			0.623		
E1	14.000			0.551		
E2		3.9			0.154	
e	0.500			0.020		
L	0.600	0.450	0.750	0.024	0.0178	0.030
L1	1.000			0.040		
K		0.000	7.000		0.000	0.275

7 Scaler Equations

$Dclk_PR = FSYN_PR_OTCLK \cdot (3 - NumPPC)$	f_{Sclk} = *140 MHz*, and *Sclk_PR* = 18AF
$dest_hpos = \frac{HP_{out} - dest_hpixel}{2}$	$dest_vpos = \frac{VP_{out} - dest_vpixel}{2}$
$WinTop = 10$	$WinBot = \begin{cases} DE_panels \Rightarrow 2, \\ WinTop + VP_{out} - 1, _otherwise \end{cases}$
$WinLeft = \max(48, HT_{out} - \min HB_{out} - 8)$	$WinRight = WinLeft + HP_{out}$
$ScaleFactorH = \frac{HP_{in} << 16}{dest_hpixel}$	$ScaleFactorV = \frac{VP_{in} << 16}{dest_vpixel}$

$$pipe_rate = \frac{Sclk_PR \cdot ScaleFactorH}{Dclk_PR >> 2}$$

$$origin_hpos = -(((WinLeft + dest_hpos) \cdot 2 - 23) \cdot ScaleFactorH + 24) >> 13$$

$$origin_vpos = -(((WinTop + dest_vpos) \cdot 2 - 1) \cdot ScaleFactorV) >> 13$$

$$LineStart = \left((WinLeft + dest_hpos) << 4 - \frac{(43 << 9) \cdot Sclk_PR}{Dclk_PR} - \frac{1 << 21}{ScaleFactorH} - 136 \right) >> 4$$

$$InitTrigDelay = \frac{(((HP_{in} > 1024)?5:9) + SMUX_VTRIG << 2) \cdot xclks_per_hsync}{SMEAS_H_NUM_LINES << 2} - ((WinTop + dest_vpos) \cdot HT_{out} \cdot (Dclk_PR >> 6)) >> 15$$

```
SCL_TRIGGER_DLY = InitTrigDelay;// wait 3 frames
wPtrMinPost = SCL_PTR_POST;
// feedback loop to tune trigger delay:
while ( !(8 < wPtrMinPost < 16) ) {// landing zone is (8, 16) & mid point is 12
wDiff = wPtrMinPost > (512 + 12) ? wPtrMinPost – (1024 + 12): wPtrMinPost - 12;
dwTriggerDelay = dwTriggerDelay + ((((xclk_freq / inclk_freq) * 3) * wDiff) / 2);
SCL_TRIGGER_DLY = max (dwTriggerDelay, 1);
// wait 2 frames for new trigger delay to take effect
wPtrMinPost = SCL_PTR_POST;
}
```

8 ADE3800 vs ADE3700

The following gives an overview of the main differences between ADE3700 and ADE3800:

Package

- 100 pin LQFP for LVDS 1&2 channels and RSDS 1 channel application
- 128 pin LQFP for RSDS 2 pixel per clock support
- 5V tolerant inputs do not have internal pull-up resistors

I2C Interface

- Add Block Transfer for fast internal data move/swap/copy

Registers

- Now all registers runs on XCLK
- RGB register address ordering is reversed to BGR

Analog Front End (ADC & SOG)

- New ADC design with higher performances
- Add Internal SOG Sync Stripper with bypass option (external SOG TTL pin)
- SOG activity can operate while ADC Power is down (wakeup from DPMS by SOG support)
- Per channel skew control
- Analog Filter bandwidth programmable
- Gain and Offset independent and linear
- 10-bit ADC using Analog Dithering Technique (ADTH)

Line Lock PLL (LLK)

- Synthesized Internal HSync has 50% duty cycle
- Phase step is 4 times more precise
- Phase range can exceed one clock period delay
- Lock filter removed
- Fewer registers, simplifies some programming
- Clock and Phase are both shadowed
- FM Modulation amplitude step is 16 times more precise

Sync Measurement (SMEAS)

- Remove out of range register
- Add Fast Mute function
- Group all the fast mute flags in SMEAS with sticky bit and enable

Sync Mux (SMUX)

- Set/Reset replaced by Pos/Size references
- Add Vtrigger to make framelock reference in the center of the frame, allowing easier artifact free implementation on wide picture position changes

Data Measurement (DMEAS)

- Scratch pad register removed
- DMEAS uses only the 7 MSB Color data information for processing

Scaler Zoom (SCALE)

- Simpler kernel programming, fewer registers
- New context sensitive scaler function
- H & V Sharpness control
- Includes former OSEQ functionality
- TCON generates the panel output and reference internal signals

Pattern Generator (PGEN)

- Only one pattern engine (P0); P1 is input video
- TCON Windowing control added

Color Transformations (SRGB)

- 2x and 4x Delta magnification options added
- RGB programmable max clipping function added

Gamma Correction (GAM)

- 10 bit input and 10 bit output with bypass option
- Relative 8 bit 2s-complement value delta tables (3x256)
- 2x Delta magnification option, with limiting
- RGB Offset within an input range option available

On Screen Display (OSD)

- New concept
- Support 1,2,3,4 bpp characters
- 64 True color palette with 4 bit alpha blending per color
- Common RAM shared between text and font
- Text can be displayed anywhere on the screen
- OSD Position is in pixel and line unit
- Per character H and V flip

- Up to 1024 character support

Flicker Detector (FLICKER)

- Only 4 of the 8 scores are measured in one shot
- Output Dithering (APC)
- New design
- Mode flexibility and performance improved
- LSB justified (for 6 bit output, MSBs are zero)

Output Mux (OMUX)

- Per Pin Delay removed
- Gate Speed monitoring register removed
- Bit rotate function added

Timing Controller (TCON)

- Simplified, easier programming
- Common functions hardcoded
- Easy to use LC Polarity Inversion signal generator
- 16 SRTD gates vs 32 in ADE 3700
- Scaler Output Data Enable signal must come from TCON (no OSEQ block anymore)
- No OCF control anymore
- Resync on H or V Sync edges no longer needed
- Comparator, Pulse and Window generators

LVDS/RSDS (new block added)

- Skew control
- 40-85 MHz clock range
- Flexible output mapping
- Pair swap, bit sequence reversing option

9 Glossary

AFE	Analog Front End, this includes the ADC and SOG circuitries
Bare Panel	see Smart Panel
bpp	bit per pixels (OSD Font: 4bpp = 16 color characters)
DFT	design For Test block to output certain internal signals (otherwise not available)
in_enab	in_henab & in_venab = Input active area signal*
in_henab	input horizontal active pixel signal*
in_venab	input vertical active line signal*
LVDS	low voltage differential signaling video interface to LCD panel
out_enab	out_henab & out_venab = Output panel active area signal*
out_henab	output panel horizontal active pixel signal*
out_venab	output panel vertical active line signal*
ppc	pixels per clock (2 ppc = dual wide panel bus interface)
PVT	parameters that depend on Process (chip), Voltage (power) and Temperature (board)
RSDS	reduced swing differential signaling video interface to LCD panel
SIP Panel	see Smart Panel
Smart Panel	panel without built-in TCON using TTL or RSDS input video interface, additional timing signals must be provided for proper operation.
SOG	sync on Green type signal
sRGB	standard RGB, color matching between display and real life
SRTD	Set-Reset-Toggle-Delay programmable gate in TCON
Standard Panel	panel with built-in TCON using LVDS or TTL input video interface
TCON	timing controller function
TMDS	transition minimized differential signaling video interface from DVI digital video input

* All enab type signals are active high

10 Revision History

Table 46: Summary of Modifications

Date	Version	Description
14 February 2003	0.1	First Draft.
03 June 2003	0.2	Second Draft.
05 September 2003	0.3	Major updates to Chapter 3: Pin Descriptions, Chapter 4: Register Description by Block and Chapter 6: Package Mechanical Data.
24 October 2003	0.4	Major updates to all chapters.
November 2003	1.0	First Issue.
January 2004	1.1	Document changed from target specification to datasheet.
April 2004	1.3	Corrections to Figure 2: LQFP100 Pinout Diagram on page 11 and Figure 3: LQFP128 Pinout Diagram on page 12 and to pin numbers in table on Chapter 4.17.1: Output Data.
May 2004	2.0	Major updates to Chapter 3: Pin Descriptions. New pin assignments impact on Figure 2: LQFP100 Pinout Diagram on page 11, Figure 3: LQFP128 Pinout Diagram on page 12, Table 3: Analog Input Signals on page 12 and Table 7: Analog Section Power Supply Pins on page 16.
June 2004	2.1	Corrected TCON_INV_1 descriptions in Table 39: Register Map. Major updates to Chapter 5: Electrical Specifications.
09 November 2004	3.0	Chapter 3: Pin Descriptions - Replaced pin 1 (QFP100) and pin 128 (QFP 128) name with PLLVDD18 . Chapter 4: Register Description by Block - Few changes applied in register description for GLBL, OMUX, SMUX and TCON. Chapter 5: Electrical Specifications - Many values modified following the device full characterization.
February 2005	3.1	Updated information in Table 7: Analog Section Power Supply Pins on page 16, Chapter 4.12.1: Parametric Gamma, Digital Contrast / Brightness on Multiple Windows and Chapter 4.12.2: Color Space Warp.
11 Apr 2005	3.2	Updated Chip Revision ID and added GLBL_AZWC_CTRL register values in Table 9: Global Control Registers on page 18.

Information furnished is believed to be accurate and reliable. However, STMicroelectronics assumes no responsibility for the consequences of use of such information nor for any infringement of patents or other rights of third parties which may result from its use. No license is granted by implication or otherwise under any patent or patent rights of STMicroelectronics. Specifications mentioned in this publication are subject to change without notice. This publication supersedes and replaces all information previously supplied. STMicroelectronics products are not authorized for use as critical components in life support devices or systems without the express written approval of STMicroelectronics.

The ST logo is a registered trademark of STMicroelectronics.

All other names are the property of their respective owners

© 2005 STMicroelectronics. All Rights Reserved.

STMicroelectronics Group of Companies

Australia - Belgium - Brazil - Canada - China - Czech Republic - Finland - France - Germany - Hong Kong - India - Israel - Italy - Japan - Malaysia - Malta - Morocco - Singapore - Spain - Sweden - Switzerland - United Kingdom - United States of America

www.st.com

Мы молодая и активно развивающаяся компания в области поставок электронных компонентов. Мы поставляем электронные компоненты отечественного и импортного производства напрямую от производителей и с крупнейших складов мира.

Благодаря сотрудничеству с мировыми поставщиками мы осуществляем комплексные и плановые поставки широчайшего спектра электронных компонентов.

Собственная эффективная логистика и склад в обеспечивает надежную поставку продукции в точно указанные сроки по всей России.

Мы осуществляем техническую поддержку нашим клиентам и предпродажную проверку качества продукции. На все поставляемые продукты мы предоставляем гарантию .

Осуществляем поставки продукции под контролем ВП МО РФ на предприятия военно-промышленного комплекса России , а также работаем в рамках 275 ФЗ с открытием отдельных счетов в уполномоченном банке. Система менеджмента качества компании соответствует требованиям ГОСТ ISO 9001.

Минимальные сроки поставки, гибкие цены, неограниченный ассортимент и индивидуальный подход к клиентам являются основой для выстраивания долгосрочного и эффективного сотрудничества с предприятиями радиоэлектронной промышленности, предприятиями ВПК и научно-исследовательскими институтами России.

С нами вы становитесь еще успешнее!

Наши контакты:

Телефон: +7 812 627 14 35

Электронная почта: sales@st-electron.ru

Адрес: 198099, Санкт-Петербург, Промышленная ул, дом № 19, литера Н, помещение 100-Н Офис 331