Type 381LR 105 °C Highest Ripple, Snap-In Aluminum

Ultra-High Ripple Capabilities

Compared to standard 105 °C snap-ins like the Type 381L/LX Type 381LR can handle an extra 25% ripple current or more. This remarkable capability stems from advances in electrolyte that give extremely low ESR values.In high ripple current applications like motor drives you can save by using fewer capacitors.

Highlights

- The right choice for motor drive bus capacitors
- The right choice for UPS bus capacitors
- Compare to Type 381L
- Up to 2 times the ripple current

Specifications

Temperature Range	–40 °C to + 105 °C ≤ 315 Vdc –25 °C to + 105 °C ≥ 350 Vdc
Rated Voltage Range	200 Vdc to 450 Vdc
Capacitance Range	56 µF to 2,200 µF
Capacitance Tolerance	± 20%
Leakage Current	≤3 $\sqrt{CV}$ µA, 4 mA max, 5 minutes
Ripple Current Multipliers	Ambient Temperature **45 °C** / **60 °C** / **70 °C** / **85 °C** / **105 °C** 2.35 / 2.20 / 2.00 / 1.70 / 1.00 Frequency **50 Hz** / **60 Hz** / **120 Hz** / **500 kHz** / **1 kHz** / **10 kHz & Up** 0.75 / 0.80 / 1.00 / 1.20 / 1.25 / 1.40
Low Temperature Characteristics	Impedance ratio: $Z_{-20°C}/Z_{+25°C}$ ≤ 3 (200–450Vdc)
Endurance Life Test	3000 h at full load at 105 °C Δ Capacitance ±20% ESR 200% of limit DCL 100% of limit
Shelf Life Test	1000 h at 105 °C Δ Capacitance ±20% ESR 200% of limit DCL 100% of limit
Vibration	10 to 55 Hz, 0.06" and 10 g max, 2 h each plane
RoHS Compliant	

Type 381LR 105 °C Highest Ripple, Snap-In Aluminum

Ultra-High Ripple Capabilities

Part Numbering System

381LR	271	M	200	H01	2	+D
Type	Cap	Tolerance	Voltage	Case Code	Insulating Sleeve	**Blank** = no end disk if <250 V **D** = end disk, any voltage
381LR	**271** = 270 µF **222** = 2200 µF	**M** = ±20%	**160** = 160 Vdc **450** = 450 Vdc		**2** = PVC	

Outline Drawing

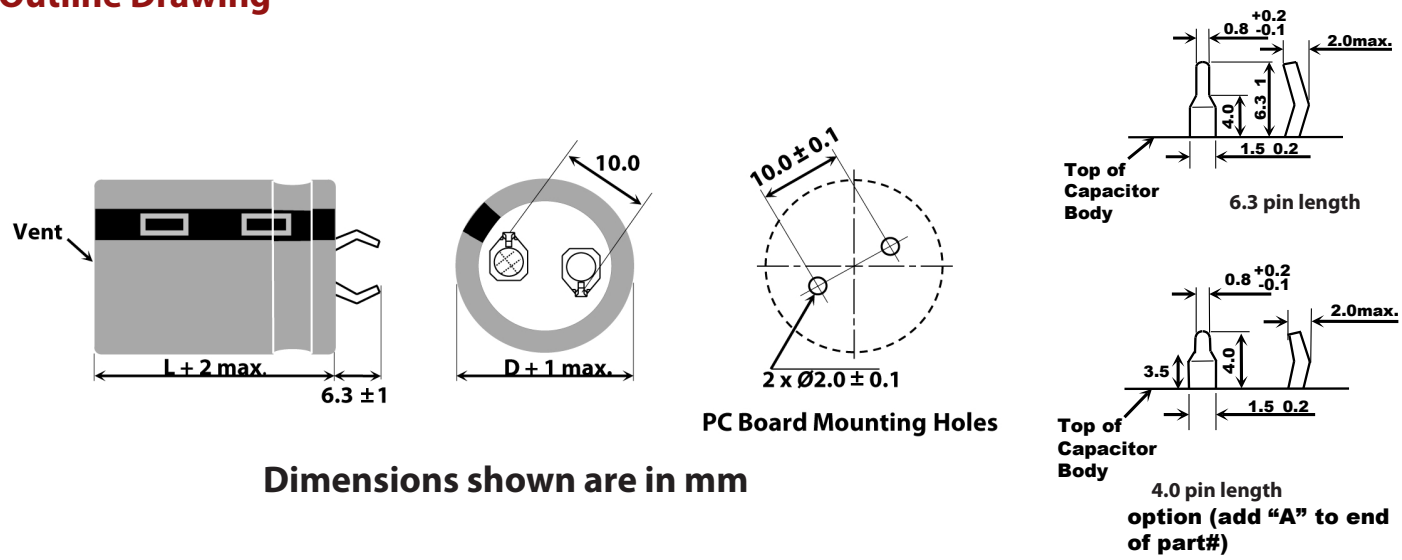

Dimensions shown are in mm

Note that for 200 volts and under the insulating end disc is optional - If one is needed add a (+D) to the end of the part numbering system.

Insulated Case Dimensions

Case Code	DIAMETER D mm	DIAMETER D inches	LENGTH L mm	LENGTH L inches	Typical Weight (grams)	Case Code	DIAMETER D mm	DIAMETER D inches	LENGTH L mm	LENGTH L inches	Typical Weight (grams)
H01	22	0.87	25	0.98	16	K01	30	1.18	25	0.98	30
H02	22	0.87	30	1.18	19	K02	30	1.18	30	1.18	35
H03	22	0.87	35	1.38	22	K03	30	1.18	35	1.38	40
H04	22	0.87	40	1.57	24	K04	30	1.18	40	1.57	44
H45	22	0.87	45	1.77	28	K45	30	1.18	45	1.77	49
H05	22	0.87	50	1.97	31	K05	30	1.18	50	1.97	53
J01	25	0.98	25	0.98	20	A01	35	1.38	25	0.98	42
J02	25	0.98	30	1.18	24	A02	35	1.38	30	1.18	48
J03	25	0.98	35	1.38	27	A03	35	1.38	35	1.38	54
J04	25	0.98	40	1.57	31	A04	35	1.38	40	1.57	60
J45	25	0.98	45	1.77	35	A45	35	1.38	45	1.77	67
J05	25	0.98	50	1.97	38	A05	35	1.38	50	1.97	74
						A55	35	1.38	55	2.17	80

Type 381LR 105 °C Highest Ripple, Snap-In Aluminum

Ultra-High Ripple Capabilities

Ratings

Cap. (µF)	Catalog Part Number	ESR Max @ 25° C 120 Hz (Ω)	ESR Max @ 25° C 20 kHz (Ω)	Ripple Amps @ 105 °C 120 Hz (A)	Ripple Amps @ 105 °C 20 kHz (A)	Nominal Size D x L (mm)
200 Vdc (250 Vdc Surge)						
270	381LR271M200H012	0.553	0.249	1.42	2.03	22 X 25
330	381LR331M200H022	0.452	0.203	1.56	2.23	22 X 30
390	381LR391M200H022	0.383	0.172	1.71	2.44	22 X 30
390	381LR391M200J012	0.383	0.172	1.71	2.44	25 X 25
470	381LR471M200H032	0.317	0.143	1.85	2.64	22 X 35
470	381LR471M200J022	0.317	0.143	1.85	2.64	25 X 30
560	381LR561M200H042	0.266	0.120	2.14	3.05	22 X 40
560	381LR561M200J022	0.266	0.120	2.14	3.05	25 X 30
560	381LR561M200K012	0.266	0.120	2.14	3.05	30 X 25
680	381LR681M200H452	0.219	0.099	2.42	3.45	22 X 45
680	381LR681M200J032	0.219	0.099	2.42	3.45	25 X 35
680	381LR681M200K022	0.219	0.099	2.42	3.45	30 X 30
820	381LR821M200H052	0.182	0.082	2.63	3.76	22 X 50
820	381LR821M200J042	0.182	0.082	2.63	3.76	25 X 40
820	381LR821M200K022	0.182	0.082	2.63	3.76	30 X 30
820	381LR821M200A012	0.182	0.082	2.63	3.76	35 X 25
1000	381LR102M200J452	0.149	0.067	2.84	4.06	25 X 45
1000	381LR102M200K032	0.149	0.067	2.84	4.06	30 X 35
1000	381LR102M200A022	0.149	0.067	2.84	4.06	35 X 30
1200	381LR122M200K042	0.124	0.062	3.13	4.47	30 X 40
1200	381LR122M200A032	0.124	0.062	3.13	4.47	35 X 35
1500	381LR152M200K052	0.099	0.050	3.56	5.06	30 X 50
1500	381LR152M200A042	0.099	0.050	3.56	5.06	35 X 40
1800	381LR182M200A452	0.083	0.041	3.84	5.48	35 X 45
2200	381LR222M200A052	0.066	0.040	4.12	5.89	35 X 50
250 Vdc (300 Vdc Surge)						
220	381LR221M250H022	0.678	0.305	1.28	1.83	22 X 30
270	381LR271M250H022	0.553	0.249	1.42	2.03	22 X 30
270	381LR271M250J012	0.553	0.249	1.42	2.03	25 X 25
330	381LR331M250H032	0.452	0.203	1.64	2.34	22 X 35
330	381LR331M250J022	0.452	0.203	1.64	2.34	25 X 30
390	381LR391M250H042	0.383	0.172	1.72	2.45	22 X 40
390	381LR391M250J022	0.383	0.172	1.72	2.45	25 X 30
390	381LR391M250K012	0.383	0.172	1.72	2.45	30 X 25
470	381LR471M250H452	0.317	0.143	1.85	2.64	22 X 45
470	381LR471M250J032	0.317	0.143	1.85	2.64	25 X 35
470	381LR471M250K022	0.317	0.143	1.85	2.64	30 X 30
560	381LR561M250J042	0.266	0.120	2.14	3.05	25 X 40
560	381LR561M250K022	0.266	0.120	2.14	3.05	30 X 30
560	381LR561M250A012	0.266	0.120	2.14	3.05	35 X 25
680	381LR681M250J452	0.219	0.099	2.42	3.45	25 X 45

Cap. (µF)	Catalog Part Number	ESR Max @ 25° C 120 Hz (Ω)	ESR Max @ 25° C 20 kHz (Ω)	Ripple Amps @ 105 °C 120 Hz (A)	Ripple Amps @ 105 °C 20 kHz (A)	Nominal Size D x L (mm)
250 Vdc (300 Vdc Surge)						
680	381LR681M250K032	0.219	0.099	2.42	3.45	30 X 35
680	381LR681M250A022	0.219	0.099	2.42	3.45	35 X 30
820	381LR821M250K042	0.182	0.082	2.63	3.76	30 X 40
820	381LR821M250A032	0.182	0.082	2.63	3.76	35 X 35
1000	381LR102M250K052	0.149	0.067	2.84	4.06	30 X 50
1000	381LR102M250A042	0.149	0.067	2.84	4.06	35 X 40
1200	381LR122M250A452	0.124	0.062	3.13	4.47	35 X 45
1500	381LR152M250A052	0.099	0.050	3.56	5.06	35 X 50
400 Vdc (450 Vdc Surge)						
82	381LR820M400H012	1.617	0.728	0.8	1.14	22 X 25
100	381LR101M400H022	1.326	0.597	0.91	1.3	22 X 30
100	381LR101M400J012	1.960	0.960	0.91	1.3	25 X 25
120	381LR121M400H032	1.105	0.497	1.02	1.46	22 X 35
120	381LR121M400J022	1.105	0.497	1.02	1.46	25 X 30
150	381LR151M400H042	1.105	0.387	1.07	1.53	22 X 40
150	381LR151M400J022	1.105	0.387	1.07	1.53	25 X 30
150	381LR151M400K012	1.105	0.387	1.07	1.53	30 X 25
180	381LR181M400H452	0.737	0.322	1.12	1.6	22 X 45
180	381LR181M400J032	0.737	0.322	1.12	1.6	25 X 35
180	381LR181M400K022	0.737	0.322	1.12	1.6	30 X 30
220	381LR221M400H052	0.603	0.271	1.42	2.03	22 X 50
220	381LR221M400J042	0.603	0.271	1.42	2.03	25 X 40
220	381LR221M400K022	0.603	0.271	1.42	2.03	30 X 30
220	381LR221M400A012	0.603	0.271	1.42	2.03	35 X 25
270	381LR271M400J452	0.491	0.221	1.56	2.23	25 X 45
270	381LR271M400K032	0.491	0.221	1.56	2.23	30 X 35
270	381LR271M400A022	0.491	0.221	1.56	2.23	35 X 30
330	381LR331M400K042	0.402	0.181	1.71	2.44	30 X 40
330	381LR331M400A022	0.402	0.181	1.71	2.44	35 X 30
390	381LR391M400K452	0.34	0.153	1.85	2.64	30 X 45
390	381LR391M400A032	0.34	0.153	1.85	2.64	35 X 35
470	381LR471M400A042	0.282	0.127	2.01	2.87	35 X 40
560	381LR561M400A452	0.237	0.107	2.35	3.36	35 X 45
420 Vdc (470 Vdc Surge)						
68	381LR680M420H012	1.95	0.878	0.76	1.08	22 X 25
82	381LR820M420H022	1.617	0.728	0.8	1.14	22 X 30
82	381LR820M420J012	1.617	0.728	0.8	1.14	25 X 25
100	38L1R101M420H022	1.326	0.597	0.91	1.3	22 X 30
100	381LR101M420J012	1.326	0.597	0.91	1.3	25 X 25
120	381LR121M420H032	1.105	0.497	1.02	1.46	22 X 35
120	381LR121M420J022	1.105	0.497	1.02	1.46	25 X 30

Type 381LR 105 °C Highest Ripple, Snap-In Aluminum

Ultra-High Ripple Capabilities

Cap. (µF)	Catalog Part Number	ESR Max @ 25° C 120 Hz (Ω)	ESR Max @ 25° C 20 kHz (Ω)	Ripple Amps @ 105 °C 120 Hz (A)	Ripple Amps @ 105 °C 20 kHz (A)	Nominal Size D x L (mm)
420 Vdc (470 Vdc Surge)						
150	381LR151M420K012	0.884	0.398	1.07	1.53	30 X 25
180	381LR181M420H452	0.737	0.332	1.12	1.6	22 X 45
180	381LR181M420J042	0.737	0.332	1.12	1.6	25 X 40
180	381LR181M420K022	0.737	0.332	1.12	1.6	30 X 30
180	381LR181M420A012	0.737	0.332	1.12	1.6	35 X 25
220	381LR221M420J452	0.603	0.271	1.42	2.03	25 X 45
220	381LR221M420K032	0.603	0.271	1.42	2.03	30 X 35
220	381LR221M420A022	0.603	0.271	1.42	2.03	35 X 30
270	381LR271M420J052	0.491	0.221	1.68	2.4	25 X 50
270	381LR271M420K042	0.491	0.221	1.68	2.4	30 X 40
270	381LR271M420A022	0.491	0.221	1.68	2.4	35 X 30
330	381LR331M420K452	0.402	0.181	1.78	2.54	30 X 45
330	381LR331M420A032	0.402	0.181	1.78	2.54	35 X 35
390	381LR391M420K052	0.34	0.153	1.91	2.73	30 X 50
390	381LR391M420A042	0.34	0.153	1.91	2.73	35 X 40
470	381LR471M420A452	0.282	0.127	2.23	3.18	35 X 45
450 Vdc (500 Vdc Surge)						
56	381LR560M450H012	2.368	1.066	0.67	0.95	22 X 25
68	381LR680M450H022	1.95	0.878	0.76	1.08	22 X 30
68	381LR680M450J012	1.95	0.878	0.76	1.08	25 X 25
82	381LR820M450H022	1.617	0.728	0.8	1.14	22 X 30
82	381LR820M450J012	1.617	0.728	0.8	1.14	25 X 25

Cap. (µF)	Catalog Part Number	ESR Max @ 25° C 120 Hz (Ω)	ESR Max @ 25° C 20 kHz (Ω)	Ripple Amps @ 105 °C 120 Hz (A)	Ripple Amps @ 105 °C 20 kHz (A)	Nominal Size D x L (mm)
450 Vdc (500 Vdc Surge)						
100	381LR101M450H032	1.326	0.597	0.91	1.3	22 X 35
100	381LR101M450J022	1.326	0.597	0.91	1.3	25 X 30
120	381LR121M450H042	1.105	0.497	1.02	1.46	22 X 40
120	381LR121M450J032	1.105	0.497	1.02	1.46	25 X 35
120	381LR121M450K012	1.105	0.497	1.02	1.46	30 X 25
150	381LR151M450H452	0.884	0.396	1.07	1.53	22 X 45
150	381LR151M450J042	0.884	0.396	1.07	1.53	25 X 40
150	381LR151M450K022	0.884	0.396	1.07	1.53	30 X 30
150	381LR151M450A012	0.884	0.396	1.07	1.53	35 X 25
180	381LR181M450H052	0.737	0.332	1.12	1.6	22 X 50
180	381LR181M450J042	0.737	0.332	1.12	1.6	25 X 40
180	381LR181M450K022	0.737	0.332	1.12	1.6	30 X 30
180	381LR181M450A012	0.737	0.332	1.12	1.6	35 X 25
220	381LR221M450J452	0.603	0.271	1.42	2.03	25 X 45
220	381LR221M450K032	0.603	0.271	1.42	2.03	30 X 35
220	381LR221M450A022	0.603	0.271	1.42	2.03	35 X 30
270	381LR271M450K042	0.491	0.221	1.72	2.45	30 X 40
270	381LR271M450A032	0.491	0.221	1.72	2.45	35 X 35
330	381LR331M450K052	0.402	0.181	1.85	2.64	30 X 50
330	381LR331M450A042	0.402	0.181	1.85	2.64	35 X 40
390	381LR391M450A042	0.34	0.153	1.97	2.82	35 X 40
470	381LR471M450A052	0.282	0.127	2.47	3.53	35 X 50

Typical Performance Curves

Life Test 105 °C, Full Load, 220 µF, 400 Vdc
Capacitance, DF, Leakage Current

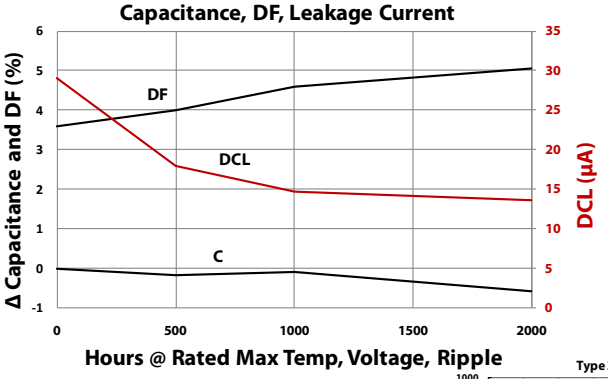

Life Test 105 °C, Full Load, 330 µF, 400 Vdc
Capacitance, DF, Leakage Current

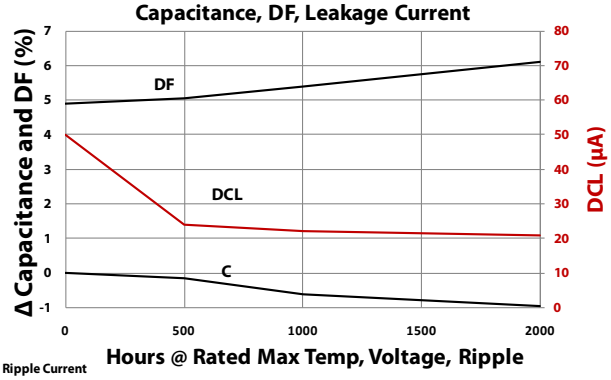

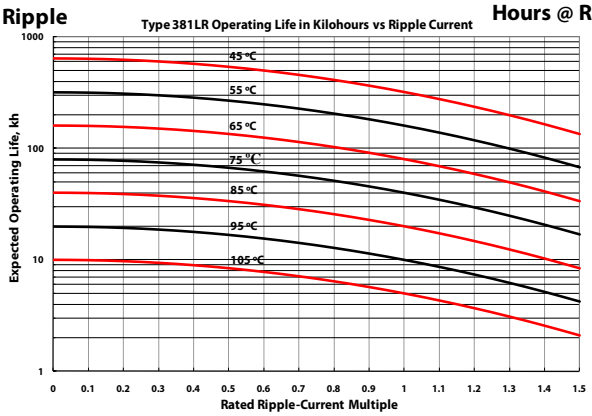

Мы молодая и активно развивающаяся компания в области поставок электронных компонентов. Мы поставляем электронные компоненты отечественного и импортного производства напрямую от производителей и с крупнейших складов мира.

Благодаря сотрудничеству с мировыми поставщиками мы осуществляем комплексные и плановые поставки широчайшего спектра электронных компонентов.

Собственная эффективная логистика и склад в обеспечивает надежную поставку продукции в точно указанные сроки по всей России.

Мы осуществляем техническую поддержку нашим клиентам и предпродажную проверку качества продукции. На все поставляемые продукты мы предоставляем гарантию .

Осуществляем поставки продукции под контролем ВП МО РФ на предприятия военно-промышленного комплекса России , а также работаем в рамках 275 ФЗ с открытием отдельных счетов в уполномоченном банке. Система менеджмента качества компании соответствует требованиям ГОСТ ISO 9001.

Минимальные сроки поставки, гибкие цены, неограниченный ассортимент и индивидуальный подход к клиентам являются основой для выстраивания долгосрочного и эффективного сотрудничества с предприятиями радиоэлектронной промышленности, предприятиями ВПК и научно-исследовательскими институтами России.

С нами вы становитесь еще успешнее!

Наши контакты:

Телефон: +7 812 627 14 35

Электронная почта: sales@st-electron.ru

Адрес: 198099, Санкт-Петербург, Промышленная ул, дом № 19, литера Н, помещение 100-Н Офис 331