DESC APPROVED LOW DROPOUT NEGATIVE

Please see mechanical outlines herein

Three Terminal, Fixed Voltage, Low Dropout Negative Voltage Regulator In Hermetic Packages

FEATURES

- Approved To DESC Standardized Military Drawings
- Low Dropout Voltage, 0.6 V @ I_O = 1 A
- Output Current in Excess of 1 A [LCC 20 (N2) package limited to 0.3A]
- Reverse Battery Protection
- Internal Short Circuit Protection
- Isolated and Non-Isolated Hermetic Package Types
- Output Voltages: - 5V, -5.2V, -12V, & -15V

DESCRIPTION

The OM2990 series of fixed voltage regulators are designed to provide up to 1.5A with high efficiency. It has the ability to source 1A of output current with a typical dropout voltage of 0.6V and a maximum of 1V over the entire operating temperature range. It is supplied in hermetic packages and is ideally suited for all applications where small size and high reliability are required.

ABSOLUTE MAXIMUM RATINGS, T_C = 25°C

Input Voltage . . . . . -26 V to +0.3V
Output Voltage . . . . . -5V, -5.2 V, -12 V, -15 V dc
Operating Junction Temperature Range . . . . . - 55°C to + 125°C
Storage Temperature Range . . . . . - 65°C to + 150°C
Lead Temperature (Soldering 10 seconds) . . . . . 300°C
Thermal Resistance: Junction to Case
  Case 2, LCC20 . . . . . 15.5°C/W
  Case U&M, TO-257 (isolated) & SMD-3 . . . . . 3.8°C/W
  Case T&N, TO-257 (non-isolated) & SMD-1 . . . . . 3.0°C/W
  Case Y, TO-3 . . . . . 2.7°C/W
Maximum Output Current
  Case 2 . . . . . 0.3A
  Case U&M 1.2A
  Case T, N & Y 1.5A

APPROVED DESC DRAWING	OMNIREL P/N
5962-9571101MUA	OM2990 - 5 STM
5962-9571002MUA	OM2990 - 5.2 STM
5962-9571001MUA	OM2990 - 12 STM

ELECTRICAL CHARACTERISTICS, OM2990-5NK, NM, NT (-5 VOLTS)

Test Conditions are -55°C T_A 125°C, V_{IN} = -10 V, C_{OUT} = 47 µF (unless otherwise specified).

Parameter	Symbol	Test Conditions	Notes	Min.	Max.	Unit
Output Voltage	V_{OUT}	5 mA ≤ I_O ≤ 1.0 A	1 2	-5.10 -5.25	-4.90 -4.75	V
Quiescent Current	I_Q	I_O ≤ 1.0A	1 2		5 12	m A
		I_O = 1.0A , V_{IN} = -5 V	1,2		50	
Line Regulation	V_{RLN}	-6 V V_{IN} -26 V, I_{OUT} = 5 mA	1 2		±40 ±50	m V
Load Regulation	V_{RLD}	50 mA I_{OUT} 1.0 A	1 2		±50 ±100	m V
Dropout Voltage	V_{DO}	I_O = 0.1 A DV_O 100 mV	1 2		3	V
		I_O = 1.0 A DV_O 100 mV	1 2		1	
Output Noise Voltage	V_{ON}	I_O = 5 mA, 10 Hz - 100 kHz	3		750	µV
Short Circuit Current	I_{OS}	R_L = 1	1 2	1.5 1.3		A
Maximum Output Current	I_{MAX}		1	1.5		A
Ripple Rejection	R_R	V_{ripple} = 1 V_{ms} I_{OUT} = 5 mA, f = 1 kHz	1	50		dB

Notes: 1. T_A = 25°C.
2. Over full operating temperature range.
3. Guaranteed, not tested

ELECTRICAL CHARACTERISTICS, OM2990-12NK, NM, NT (-12 VOLTS)

Test Conditions are -55°C T_A 125°C, V_{IN} = -17 V, C_{OUT} = 47 µF (unless otherwise specified).

Parameter	Symbol	Test Conditions	Notes	Min.	Max.	Unit
Output Voltage	V_{OUT}	5 mA ≤ I_O ≤ 1.0A	1 2	-12.24 -12.60	-11.76 -11.40	V
Quiescent Current	I_Q	I_O ≤ 1.0A	1 2		5 12	m A
		I_O = 1A, V_{IN} = -12 V	1,2		50	
Line Regulation	V_{RLN}	-13 V V_{IN} -26 V I_{OUT} = 5 mA	1 2		±65 ±80	m V
Load Regulation	V_{RLD}	50 mA I_{OUT} 1.0 A	1 2		±80 ±120	m V
Dropout Voltage	V_{DO}	I_O = 0.1 A DV_O 100 mV	1 2		3	V
		I_O = 1 A DV_O 100 mV	1 2		1	
Output Noise Voltage	V_{ON}	I_O = 5 mA, 10 Hz - 100 kHz	3		1500	µV
Short Circuit Current	I_{OS}	R_L = 1	1 2	.90 .75		A
Maximum Output Current	I_{MAX}		1 4	1.4		A
Ripple Rejection	R_R	V_{ripple} = 1 V_{ms} I_{OUT} = 5 mA, f = 1 kHz	1	42		dB

Notes: 1. T_A = 25°C.
2. Over full operating temperature range.
3. Guaranteed, not tested
4. The short circuit current is less than the maximum output current due to internal foldback current limiting. The -5V and -5.2V versions do not reach the foldback current limit and therefore conducts a higher short

ELECTRICAL CHARACTERISTICS, OM2990-15NK, NM, NT (-15 VOLTS)

Test Conditions are -55°C T_A 125°C, V_{IN} = -20 V, C_{OUT} = 47 µF (unless otherwise specified).

Parameter	Symbol	Test Conditions	Notes	Min.	Max.	Unit
Output Voltage	V_{OUT}	5 mA ≤ I_O ≤ 1.0 A	1 2	-15.30 -15.75	-14.70 -14.25	V
Quiescent Current	I_Q	I_O ≤ 1.0A	1 2		15 20	m A
		I_O = 1.0A , V_{IN} = -15 V	1,2		50	
Line Regulation	V_{RLN}	-16 V V_{IN} -26 V, I_{OUT} = 5 mA	1 2		±75 ±120	m V
Load Regulation	V_{RLD}	50 mA I_{OUT} 1.0 A	1 2		±120 ±190	m V
Dropout Voltage	V_{DO}	I_O = 0.1 A DV_O 100 mV	1 2		3	V
		I_O = 1.0 A DV_O 100 mV	1 2		1	
Output Noise Voltage	V_{ON}	I_O = 5 mA, 10 Hz - 100 kHz	3		1800	µV
Short Circuit Current	I_{OS}	R_L = 1	1 2	.75 .62		A
Maximum Output Current	I_{MAX}		1 4	1.4		A
Ripple Rejection	R_R	V_{ripple} = 1 V_{ms} I_{OUT} = 5 mA, f = 1 kHz	1	42		dB

Notes: 1. T_A = 25°C.
2. Over full operating temperature range.
3. Guaranteed, not tested
4. The short circuit current is less than the maximum output current due to internal foldback current limiting. The -5V and -5.2V versions do not reach the foldback current limit and therefore conducts a higher short circuit level.

ELECTRICAL CHARACTERISTICS, OM2990-5SM, ST (-5 VOLTS)

Test Conditions are -55°C T_A 125°C, V_{IN} = -10 V, C_{OUT} = 47 µF (unless otherwise specified).

Parameter	Symbol	Test Conditions	Notes	Min.	Max.	Unit
Output Voltage	V_{OUT}	5 mA ≤ I_O ≤ 1.0 A	1 2	-5.10 -5.25	-4.90 -4.75	V
Quiescent Current	I_Q	I_O ≤ 1.0A	1 2		5 12	m A
		I_O = 1.0A , V_{IN} = -5 V	1,2		50	
Line Regulation	V_{RLN}	-6 V V_{IN} -26 V, I_{OUT} = 5 mA	1 2		±45 ±55	m V
Load Regulation	V_{RLD}	50 mA I_{OUT} 1.0 A	1 2		±70 ±110	m V
Dropout Voltage	V_{DO}	I_O = 0.1 A DV_O 100 mV	1 2		3	V
		I_O = 1.0 A DV_O 100 mV	1 2		1	
Output Noise Voltage	V_{ON}	I_O = 5 mA, 10 Hz - 100 kHz	3		750	µV
Short Circuit Current	I_{OS}	R_L = 1	1,2	1.27		A
Maximum Output Current	I_{MAX}		1	1.27		A
Ripple Rejection	R_R	V_{ripple} = 1 V_{ms} I_{OUT} = 5 mA, f = 1 kHz	1	50		dB

Notes: 1. T_A = 25°C.
2. Over full operating temperature range.
3. Guaranteed, not tested

ELECTRICAL CHARACTERISTICS, OM2990-12SM, ST (-12 VOLTS)

Test Conditions are -55°C T_A 125°C, V_{IN} = -17 V, C_{OUT} = 47 µF (unless otherwise specified).

Parameter	Symbol	Test Conditions	Notes	Min.	Max.	Unit
Output Voltage	V_{OUT}	5 mA ≤ I_O ≤ 1.0A	1 2	-12.24 -12.60	-11.76 -11.40	V
Quiescent Current	I_Q	I_O ≤ 1.0A	1 2		5 12	m A
		I_O = 1A, V_{IN} = -12 V	1,2		50	
Line Regulation	V_{RLN}	-13 V V_{IN} -26 V I_{OUT} = 5 mA	1 2		±65 ±80	m V
Load Regulation	V_{RLD}	50 mA I_{OUT} 1.0 A	1 2		±80 ±120	m V
Dropout Voltage	V_{DO}	I_O = 0.1 A DV_O 100 mV	1 2		3	V
		I_O = 1 A DV_O 100 mV	1 2		1	
Output Noise Voltage	V_{ON}	I_O = 5 mA, 10 Hz - 100 kHz	3		1500	µV
Short Circuit Current	I_{OS}	R_L = 1	1,2	.75		A
Maximum Output Current	I_{MAX}		1 4	1.18		A
Ripple Rejection	R_R	V_{ripple} = 1 V_{ms} I_{OUT} = 5 mA, f = 1 kHz	1	42		dB

Notes: 1. T_A = 25°C.
2. Over full operating temperature range.
3. Guaranteed, not tested
4. The short circuit current is less than the maximum output current due to internal foldback current limiting. The -5V and -5.2V versions do not reach the foldback current limit and therefore conducts a higher short circuit level.

ELECTRICAL CHARACTERISTICS, OM2990-15SM, ST (-15 VOLTS)

Test Conditions are -55°C T_A 125°C, V_{IN} = -20 V, C_{OUT} = 47 µF (unless otherwise specified).

Parameter	Symbol	Test Conditions	Notes	Min.	Max.	Unit
Output Voltage	V_{OUT}	5 mA ≤ I_O ≤ 1.0 A	1 2	-15.30 -15.75	-14.70 -14.25	V
Quiescent Current	I_Q	I_O ≤ 1.0A	1 2		15 20	m A
		I_O = 1.0A , V_{IN} = -15 V	1,2		50	
Line Regulation	V_{RLN}	-16 V V_{IN} -26 V, I_{OUT} = 5 mA	1 2		±75 ±120	m V
Load Regulation	V_{RLD}	50 mA I_{OUT} 1.0 A	1 2		±120 ±190	m V
Dropout Voltage	V_{DO}	I_O = 0.1 A DV_O 100 mV	1 2		3	V
		I_O = 1.0 A DV_O 100 mV	1 2		1	
Output Noise Voltage	V_{ON}	I_O = 5 mA, 10 Hz - 100 kHz	3		1800	µV
Short Circuit Current	I_{OS}	R_L = 1	1 2	.60 .50		A
Maximum Output Current	I_{MAX}		1 4	1.4		A
Ripple Rejection	R_R	V_{ripple} = 1 V_{ms} I_{OUT} = 5 mA, f = 1 kHz	1	42		dB

Notes: 1. T_A = 25°C.
2. Over full operating temperature range.
3. Guaranteed, not tested
4. The short circuit current is less than the maximum output current due to internal foldback current limiting. The -5V and -5.2V versions do not reach the foldback current limit and therefore conducts a higher short circuit level.

ELECTRICAL CHARACTERISTICS, OM2990- 5N2 (-5 VOLTS)

Test Conditions are -55°C T_A 125°C, V_{IN} = -10 V, C_{OUT} = 47 µF (unless otherwise specified).

Parameter	Symbol	Test Conditions	Notes	Min.	Max.	Unit
Output Voltage	V_{OUT}	5 mA ≤ I_O ≤ 300 mA	1 2	-5.10 -5.25	-4.90 -4.75	V
Quiescent Current	I_Q	I_O ≤ 300 mA	1 2		7 14	m A
		I_O = 300 mA , V_{IN} = -5 V	1,2		55	
Line Regulation	V_{RLN}	-6 V V_{IN} -26 V, I_{OUT} = 5 mA	1 2		±45 ±60	m V
Load Regulation	V_{RLD}	50 mA I_{OUT} 300 mA	1 2		±80 ±120	m V
Dropout Voltage	V_{DO}	I_O = 100 mA DV_O 100 mV	1 2		3	V
		I_O = 300 mA DV_O 100 mV	1 2		1	
Output Noise Voltage	V_{ON}	I_O = 5 mA, 10 Hz - 100 kHz	3		800	µV
Short Circuit Current	I_{OS}	R_L = 1	1 2	300 250		m A
Maximum Output Current	I_{MAX}		1	300		m A
Ripple Rejection	R_R	V_{ripple} = 1 V_{ms} I_{OUT} = 5 mA, f = 1 kHz	1	50		dB

Notes: 1. T_A = 25°C.
2. Over full operating temperature range.
3. Guaranteed, not tested

ELECTRICAL CHARACTERISTICS, OM2990-12N2 (-12 VOLTS)

Test Conditions are -55°C T_A 125°C, V_{IN} = -17 V, C_{OUT} = 47 µF (unless otherwise specified).

Parameter	Symbol	Test Conditions	Notes	Min.	Max.	Unit
Output Voltage	V_{OUT}	5 mA ≤ I_O ≤ 300 mA	1 2	-12.24 -12.60	-11.76 -11.40	V
Quiescent Current	I_Q	I_O ≤ 300 mA	1 2		7 14	m A
		I_O = 300 mA, V_{IN} = -12 V	1,2		60	
Line Regulation	V_{RLN}	-13 V V_{IN} -26 V I_{OUT} = 5 mA	1 2		±75 ±110	m V
Load Regulation	V_{RLD}	50 mA I_{OUT} 300 mA	1 2		±120 ±190	m V
Dropout Voltage	V_{DO}	I_O = 100 mA DV_O 100 mV	1 2		3	V
		I_O = 300 mA DV_O 100 mV	1 2		1	
Output Noise Voltage	V_{ON}	I_O = 5 mA, 10 Hz - 100 kHz	3		1650	µV
Short Circuit Current	I_{OS}	R_L = 1	1 2	200 175		m A
Maximum Output Current	I_{MAX}		1 4	280		m A
Ripple Rejection	R_R	V_{ripple} = 1 V_{ms} I_{OUT} = 5 mA, f = 1 kHz	1	42		dB

Notes: 1. T_A = 25°C.
2. Over full operating temperature range.
3. Guaranteed, not tested
4. The short circuit current is less than the maximum output current due to internal foldback current limiting. The -5V and -5.2V versions do not reach the foldback current limit and therefore conducts a higher short

ELECTRICAL CHARACTERISTICS, OM2990-15 N2 (-15 VOLTS)

Test Conditions are -55°C T_A 125°C, V_{IN} = -20 V, C_{OUT} = 47 µF (unless otherwise specified).

Parameter	Symbol	Test Conditions	Notes	Min.	Max.	Unit
Output Voltage	V_{OUT}	5 mA ≤ I_O ≤ 300 mA	1 2	-15.30 -15.75	-14.70 -14.25	V
Quiescent Current	I_Q	I_O ≤ 300 mA	1 2		20 25	m A
		I_O = 300 mA , V_{IN} = -15 V	1,2		60	
Line Regulation	V_{RLN}	-16 V V_{IN} -26 V, I_{OUT} = 5 mA	1 2		±85 ±130	m V
Load Regulation	V_{RLD}	50 mA I_{OUT} 300 mA	1 2		±135 ±205	m V
Dropout Voltage	V_{DO}	I_O = 100 mA DV_O 100 mV	1 2		3	V
		I_O = 300 mA DV_O 100 mV	1 2		1	
Output Noise Voltage	V_{ON}	I_O = 5 mA, 10 Hz - 100 kHz	3		1900	µV
Short Circuit Current	I_{OS}	R_L = 1	1 2	150 140		m A
Maximum Output Current	I_{MAX}		1 4	280		m A
Ripple Rejection	R_R	V_{ripple} = 1 V_{ms} I_{OUT} = 5 mA, f = 1 kHz	1	42		dB

Notes: 1. T_A = 25°C.
2. Over full operating temperature range.
3. Guaranteed, not tested
4. The short circuit current is less than the maximum output current due to internal foldback current limiting. The -5V and -5.2V versions do not reach the foldback current limit and therefore conducts a higher short circuit level.

ELECTRICAL CHARACTERISTICS, OM2990-5.2NK, NM, NT (-5.2 VOLTS)

Test Conditions are -55°C T_A 125°C, V_{IN} = -10.2 V, C_{OUT} = 47 µF (unless otherwise specified).

Parameter	Symbol	Test Conditions	Notes	Min.	Max.	Unit
Output Voltage	V_{OUT}	5 mA ≤ I_O ≤ 1.0 A	1 2	-5.30 -5.46	-5.10 -4.94	V
Quiescent Current	I_Q	I_O ≤ 1.0A	1 2		5 12	m A
		I_O = 1.0A , V_{IN} = -5.2 V	1,2		50	
Line Regulation	V_{RLN}	-6.2 V V_{IN} -26 V, I_{OUT} = 5 mA	1 2		±40 ±50	m V
Load Regulation	V_{RLD}	50 mA I_{OUT} 1.0 A	1 2		±50 ±100	m V
Dropout Voltage	V_{DO}	I_O = 0.1 A DV_O 100 mV	1 2		3	V
		I_O = 1.0 A DV_O 100 mV	1 2		1	
Output Noise Voltage	V_{ON}	I_O = 5 mA, 10 Hz - 100 kHz	3		750	µV
Short Circuit Current	I_{OS}	R_L = 1	1 2	1.5 1.3		A
Maximum Output Current	I_{MAX}		1	1.5		A
Ripple Rejection	R_R	V_{ripple} = 1 V_{ms} I_{OUT} = 5 mA, f = 1 kHz	1	50		dB

Notes: 1. T_A = 25°C.
2. Over full operating temperature range.
3. Guaranteed, not tested

ELECTRICAL CHARACTERISTICS, OM2990-5.2SM, ST (-5.2 VOLTS)

Test Conditions are -55°C T_A 125°C, V_{IN} = -10.2 V, C_{OUT} = 47 µF (unless otherwise specified).

Parameter	Symbol	Test Conditions	Notes	Min.	Max.	Unit
Output Voltage	V_{OUT}	5 mA ≤ I_O ≤ 1.0 A	1 2	-5.30 -5.46	-5.10 -4.94	V
Quiescent Current	I_Q	I_O ≤ 1.0A	1 2		5 12	m A
		I_O = 1.0A , V_{IN} = -5.2 V	1,2		50	
Line Regulation	V_{RLN}	-6.2 V V_{IN} -26 V, I_{OUT} = 5 mA	1 2		±45 ±55	m V
Load Regulation	V_{RLD}	50 mA I_{OUT} 1.0 A	1 2		±70 ±110	m V
Dropout Voltage	V_{DO}	I_O = 0.1 A DV_O 100 mV	1 2		3	V
		I_O = 1.0 A DV_O 100 mV	1 2		1	
Output Noise Voltage	V_{ON}	I_O = 5 mA, 10 Hz - 100 kHz	3		750	µV
Short Circuit Current	I_{OS}	R_L = 1	1,2	1.27		A
Maximum Output Current	I_{MAX}		1	1.27		A
Ripple Rejection	R_R	V_{ripple} = 1 V_{ms} I_{OUT} = 5 mA, f = 1 kHz	1	50		dB

Notes: 1. T_A = 25°C.
2. Over full operating temperature range.
3. Guaranteed, not tested

ELECTRICAL CHARACTERISTICS, OM2990-5.2N2 (-5.2 VOLTS)

Test Conditions are -55°C T_A 125°C, V_{IN} = -10.2 V, C_{OUT} = 47 µF (unless otherwise specified).

Parameter	Symbol	Test Conditions	Notes	Min.	Max.	Unit
Output Voltage	V_{OUT}	5 mA ≤ I_O ≤ 300 mA	1 2	-5.30 -5.46	-5.10 -4.94	V
Quiescent Current	I_Q	I_O ≤ 300 mA	1 2		7 14	m A
		I_O = 300 mA , V_{IN} = -5.2 V	1,2		55	
Line Regulation	V_{RLN}	-6.2 V V_{IN} -26 V, I_{OUT} = 5 mA	1 2		±45 ±60	m V
Load Regulation	V_{RLD}	50 mA I_{OUT} 300 mA	1 2		±80 ±120	m V
Dropout Voltage	V_{DO}	I_O = 100 mA DV_O 100 mV	1 2		3	V
		I_O = 300 mA DV_O 100 mV	1 2		1	
Output Noise Voltage	V_{ON}	I_O = 5 mA, 10 Hz - 100 kHz	3		800	µV
Short Circuit Current	I_{OS}	R_L = 1	1 2	300 250		m A
Maximum Output Current	I_{MAX}		1	300		m A
Ripple Rejection	R_R	V_{ripple} = 1 V_{ms} I_{OUT} = 5 mA, f = 1 kHz	1	50		dB

Notes: 1. T_A = 25°C.
2. Over full operating temperature range.
3. Guaranteed, not tested

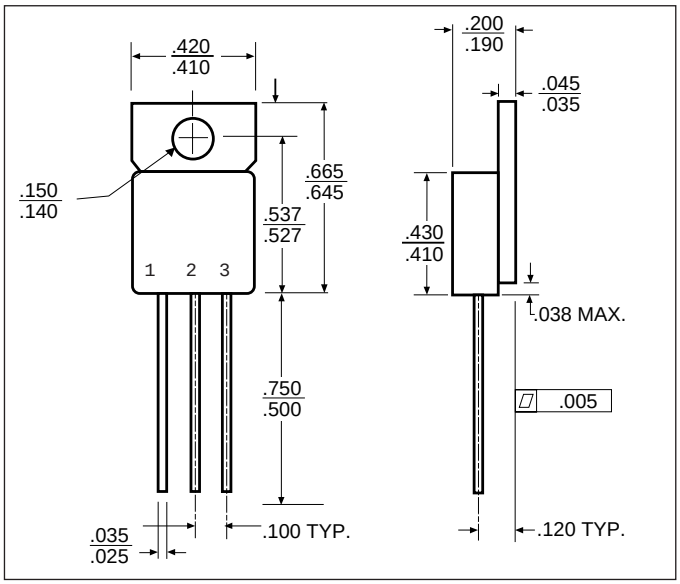

TO-257AA

OM2990STM	OM2990NTM
Isolated	Non-Isolated
Front View	Front View
Pin 1 - Ground	Pin 1 - Ground
Pin 2 - Input	Pin 2 - Input
Pin 3 - Output	Pin 3 - Output
Tab - Isolated	Tab - Input

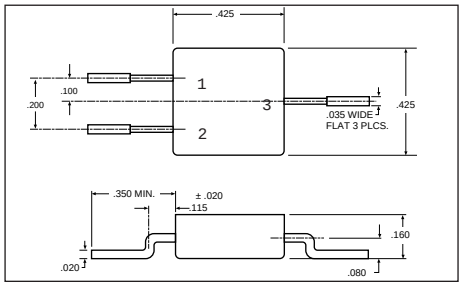

SMD-3 OM2990SMM

Front View
Pin 1 - Ground
Pin 2 - Output
Pin 3 - Input
Case - Isolated

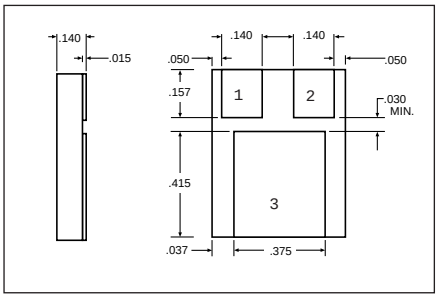

SMD 1 OM2990NMM
"N" PACKAGE

Pin 1 - Ground
Pin 2 - Output
Pin 3 - Input

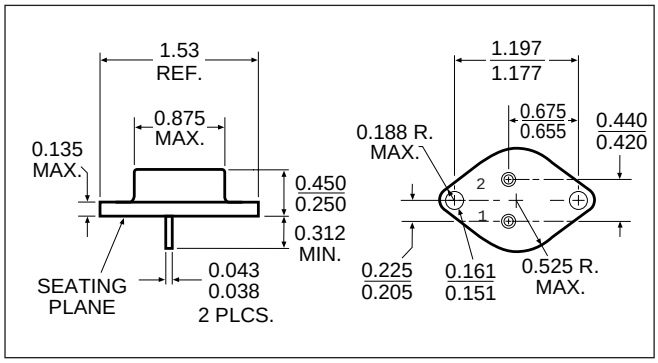

TO-204AA (TO-3) OM2990NKM

Pin 1 - Ground
Pin 2 - Output

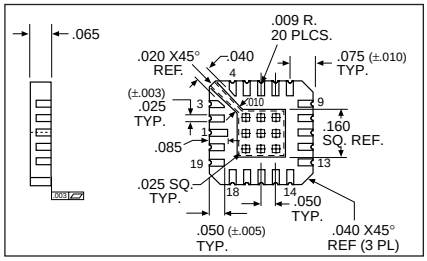

LCC 20 OM2990N2M

Pin 1	NC	Pin 11	V_{OUT}
Pin 2	NC	Pin 12	V_{OUT}
Pin 3	NC	Pin 13	NC
Pin 4	NC	Pin 14	NC
Pin 5	NC	Pin 15	V_{IN}
Pin 6	Ground	Pin 16	V_{IN}
Pin 7	NC	Pin 17	V_{IN}
Pin 8	NC	Pin 18	NC
Pin 9	V_{OUT}(Sense)	Pin 19	NC

Мы молодая и активно развивающаяся компания в области поставок электронных компонентов. Мы поставляем электронные компоненты отечественного и импортного производства напрямую от производителей и с крупнейших складов мира.

Благодаря сотрудничеству с мировыми поставщиками мы осуществляем комплексные и плановые поставки широчайшего спектра электронных компонентов.

Собственная эффективная логистика и склад в обеспечивает надежную поставку продукции в точно указанные сроки по всей России.

Мы осуществляем техническую поддержку нашим клиентам и предпродажную проверку качества продукции. На все поставляемые продукты мы предоставляем гарантию .

Осуществляем поставки продукции под контролем ВП МО РФ на предприятия военно-промышленного комплекса России , а также работаем в рамках 275 ФЗ с открытием отдельных счетов в уполномоченном банке. Система менеджмента качества компании соответствует требованиям ГОСТ ISO 9001.

Минимальные сроки поставки, гибкие цены, неограниченный ассортимент и индивидуальный подход к клиентам являются основой для выстраивания долгосрочного и эффективного сотрудничества с предприятиями радиоэлектронной промышленности, предприятиями ВПК и научно-исследовательскими институтами России.

С нами вы становитесь еще успешнее!

Наши контакты:

Телефон: +7 812 627 14 35

Электронная почта: sales@st-electron.ru

Адрес: 198099, Санкт-Петербург, Промышленная ул, дом № 19, литера Н, помещение 100-Н Офис 331