Honeywell

# MICRO SWITCH™ Heavy-Duty Limit Switches

**HDLS Series**

Datasheet

# MICRO SWITCH™ HDLS Series Heavy-Duty Limit Switches

Honeywell Sensing and Control's MICRO SWITCH™ heavy-duty limit switches' modular construction allows for a wide variety of actuator styles, operating heads, and electrical circuitry options. The plug-in versions greatly reduce downtime on production lines with high actuation rates as replacement of the switch is accomplished in seconds. The base receptacle contains all the wiring and conduit connection while the switching component with operating head easily assembles to the base and is attached with two screws.

## *What makes our switches better?*

- Industry-leading breadth-of-product offering: HDLS standard, HDLS harsh-duty epoxy sealed, or the HDLS stainless steel
- NEMA 1, 3, 4, 4X, 6, 6P, 12, 13 and IP65/66/67 environmental sealing for demanding applications
- UL, CSA, CE, and CCC approvals for global use
- Sintered bronze bearing on 303 stainless steel operating shaft for enhanced mechanical life (50 million actuation cycles) and operational reliability
- All-metal drive train for consistent operating characteristics, even at high temperature. Lasts longer (without need for frequent adjustment) than drive trains with plastic parts
- Exclusive teller tab ensures proper torque. When it cannot be moved, the lever is tight enough to prevent slippage

RELIABILITY • DURABILITY
MODULAR • GLOBAL

# Features and Benefits

### SEALED TO NEMA 1, 3, 4, 4X, 6, 6P, 12, 13; IP 65/66/67

MICRO SWITCH™ HDLS limit switch **NEMA/IP sealing** features twin shaft seals for an extra measure of protection. They are ideal for many applications with **demanding indoor and/or outdoor environments,** where they may be subjected to shock or vibration from equipment, temperature extremes, dust, splashing water, coolant, and/or hose-directed water.

## *Works the first time – every time*

### WITHSTANDS MANY TOUGH ENVIRONMENTS

Rugged, **corrosion-resistant zinc head and body** are phosphate treated and epoxy coated for indoor and outdoor applications. **Diaphragm seal** between head and body provides an extra measure of protection. Functions with exposure to severe temperatures, dust, dirt, grime, and caustic chemicals.

## *Rapid customization and design-in time*

### USED GLOBALLY

**Multiple connectivity options** for international applications, as well as global approvals. Large, existing installation base and channel allows for quick delivery worldwide. **UL, CSA, CE, and CCC** approvals.

### OPTIONAL SEALS

**Fluorosilicone seals** available for low temperature applications, and **fluorocarbon seals** available for chemically harsh environments and higher temperature applications.

### UNIQUE DESIGN FEATURES

Keyed head design for **secure head-to-body retention** with the head in any one of four positions 90° apart. Self-lifting pressure plate terminals **saves wiring time.**

### DESIGN FLEXIBILITY

Wide variety of actuators, switch options, and head styles for design flexibility. Rotary actuated heads are **field adjustable** for CW actuation, CCW actuation, or both to reduce inventory.

### EASILY CONTROLS LOW-VOLTAGE DC APPLICATIONS

Limit switches available with a choice of **silver or gold-plated contacts** to handle a variety of electrical load requirements.

### INTERCHANGEABLE

Plug-in and non plug-in bodies have identical operating characteristics and are **dimensionally interchangeable to reduce complexity**. Actuating levers for single and double pole, plug-in and non plug-in bodies provide same tracking and minimize inventory.

# Potential Applications

## MACHINE TOOLS
Determines part presence, machine slide position/stops, gates and doors

## AUTOMOTIVE MACHINE TOOLS
Provides presence sensing on transfer machines, horizontal and vertical boring machines, stamping and forming equipment and automotive assembly line equipment

## MATERIAL HANDLING
Used to position automated vehicle wash systems, overhead doors, garbage truck bodies, cranes, intermodal container handlers, gantry cranes, commercial aircraft boarding bridge

## OUTDOOR ELECTROMECHANICAL STRUCTURES
End of travel indicator for equipment with moving components in harsh environments and remote locations, such as satellite and weather station arrays and solar energy harvesters

## BALERS/COMPACTORS
Used as door interlocks for indoor and outdoor applications

## CONVEYORS
Used for alignment/tracking, tensioning, and product/material presence

## FOOD AND BEVERAGE
Used for process control, and packaging

## POWER PLANTS
Used on conveyors, doors and gates

## OFF-ROAD EQUIPMENT
Senses position of large components on wheeled or track equipment, motorized railroad switch, and rail locomotives

## AGRICULTURAL EQUIPMENT
Grain handling and livestock equipment

## VALVES
Indicates closed and/or open position

## TRANSPORTATION HUBS
Commercial aircraft boarding bridge, commercial aircraft ground support equipment, intermodal container handlers, gantry cranes, shipboard conveyors, door/hatch position & valve position, railroad locomotives and rail maintenance equipment

# MICRO SWITCH™ Heavy-Duty Limit Switches

**Figure 1. MICRO SWITCH™ HDLS SERIES FEATURES AND OPTIONS**

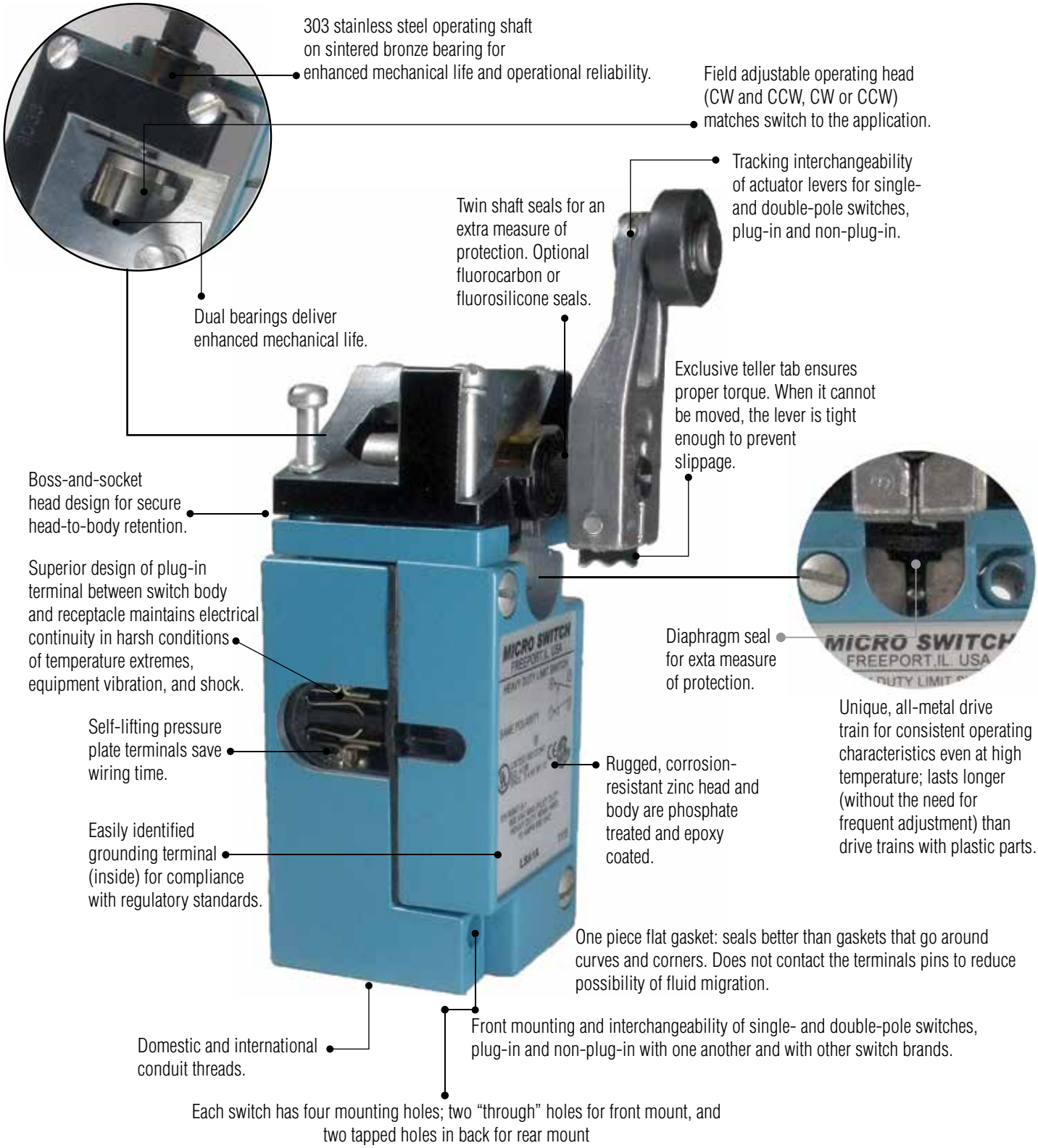

# HDLS Series

**Table 1. Specifications**

| Characteristic | Parameter | | |
|---|---|---|---|
| Product type | MICRO SWITCH™ heavy-duty limit switches | | |
| Acutators | Side plunger - adjustable<br>Side roller plunger<br>Top plunger - adjustable<br>Top rotary<br>Wobble - coil spring | Side plunger - pin<br>Side rotary<br>Top plunger - pin<br>Wobble - cable<br>Wobble - plastic rod | Side plunger maintained - pin<br>Side rotary maintained<br>Top roller plunger<br>Wobble - cat whisker<br>Wobble - spring wire |
| Circuitry | 1NC 1NO SPDT snap action, double break<br>2NC 2NO DPDT center neutral, snap action, double break<br>2NC 2NO DPDT snap action, double break<br>2NC 2NO DPDT sequential, snap action, double break | | |
| Electrical | 10 A thermal<br>Single and double pole: AC15 A600; DC13 R300 (see table on page 8) | | |
| Housing material | Zinc die-cast with an electrostatic epoxy coating | | |
| Termination types | 0.5 in - 14NPT conduit<br>PG 13,5 conduit<br>4-pin mini-style connector<br>6 ft cable | 0.75 in - 14NPT conduit<br>20 mm conduit<br>5-pin mini-style connector<br>Manifold mounting | 12 ft cable<br>4-pin micro-style connector<br>9-pin mini-style connector |
| Housing type | HDLS Plug-in, HDLS Non-Plug-in | | |
| Sealing | IP65/66/67; NEMA 1, 3, 4, 4X, 6, 6P, 12, 13 | | |
| Operating temperature | -12 °C to 121 °C [10 °F to 250 °F];<br>optional: -40 °C to 121 °C [-40 °F to 250 ’F] | | |
| Agency approvals and standards | UL, CE, CSA, CCC | | |
| UNSPSC code | 302119 | | |
| UNSPSC commodity | 302119 Switches and controls and relays | | |
| Sealed | Industrial | | |

# MICRO SWITCH™ Heavy-Duty Limit Switches

## MICRO SWITCH™ HDLS SERIES NOMENCLATURE

**LS** **A** **1A** **1** **-**

**Switch Type**

**HDLS** Series Heavy-Duty Limit Switch

* 3 or 4 after the "LS" indicates special metric conduit threads:
3 = PG 13,5
4 = 20 mm

**Heads**

| | | | |
|---|---|---|---|
| **A** | Side rotary, momentary | **L** | Side rotary, sequential |
| **B** | Top rotary, momentary | **M** | Side rotary, center neutral |
| **C** | Top plunger, plain | **N** | Side rotary, maintained |
| **D** | Top roller plunger | **P** | Side rotary, momentary, low pretravel |
| **E** | Side plunger plain, momentary | **R** | Side rotary, momentary, low torque |
| **F** | Side plunger roller, momentary | **S** | Side rotary, gravity return extr. low torque |
| **G** | Side plunger plain, maintained | **T** | Side rotary, momentary, extr. low torque |
| **H** | Side rotary, momentary, low pretravel & torque | **U** | Side rotary, momentary, 5° max. pretravel |
| **J** | Wobble stick | **V** | Top plunger, adjustable |
| **K** | Cat whisker | **W** | Side plunger, momentary, adjustable |

**Body/Basic Switch Codes**

Plug-in Single Pole

| | |
|---|---|
| **1A** | Standard switch |
| **1E** | Gold contacts |
| **1G** | Gold contacts, manifold mount |
| **1H** | Low force |
| **5A** | 120 V neon indicator |
| **8A** | 240 V neon indicator |
| **9A** | 24 V LED indicator |

Non-plug-in Single Pole

| | |
|---|---|
| **3K** | Standard switch |

Plug-in Double Pole

| | |
|---|---|
| **2B** | Standard switch |
| **2C** | Sequential |
| **2D** | Center neutral |
| **2R** | 120 V neon indicator |
| **2S** | Standard switch golf contacts |
| **2T** | Sequential, gold contacts |
| **2U** | Center neutral, gold contacts |
| **6B** | Standard switch, 1/2 in conduit |
| **6C** | Sequential, 1/2 in conduit |
| **6D** | Center neutral, 1/2 in conduit |
| **6R** | 120 V neon indicator, 1/2 in conduit |
| **6S** | Stnd. switch, gold contacts, 1/2 in conduit |
| **6T** | Sequential, gold contacts, 1/2 in conduit |
| **6U** | Center neutral, gold contacts, 1/2 in conduit |

Non-plug-in Double Pole

| | |
|---|---|
| **4L** | Standard switch |
| **4M** | Sequential |
| **4N** | Center neutral |
| **4S** | Standard switch golf contacts |
| **4T** | Sequential, gold contacts |
| **4U** | Center neutral, gold contacts |
| **7L** | Standard switch, 1/2 in conduit |
| **7M** | Sequential, 1/2 in conduit |
| **7N** | Center neutral, 1/2 in conduit |
| **7S** | Stnd. switch, gold contacts, 1/2 in conduit |
| **7T** | Sequential, gold contacts, 1/2 in conduit |
| **7U** | Center neutral, gold contacts, 1/2 in conduit |

**Modification Codes**

| | | | |
|---|---|---|---|
| **A** | 4-pin mini-style | **PA** | 5-conductor STOOW-A cable, 8 ft |
| **B** | 5-pin mini-style | **XA** | 9-conductor STOOW-A cable, 8 ft |
| **C** | 5-conductor STOW-A cable, 6 ft | **PB** | 5-conductor STOOW-A cable, 30 ft |
| **E** | 4-conductor SJTOW-A cable, 6 ft | **1** | Clockwise head rotation |
| **J** | 8-pin mini-style | **2** | Counterclockwise head rotation |
| **M** | 9-conductor STOOW-A cable, 6 ft | **3** | Head assembled with actuator to right side |
| **P** | 5-conductor STOOW-A cable, 12 ft | **4** | Head assembled with actuator to left side |
| **R** | 9-pin mini-style | **5** | Head assembled with actuator to mounting surface |
| **S** | 5-pin micro-style | **6** | Roller perpendicular to mounting surface |
| **X** | 9-conductor STOOW-A cable, 12 ft | **7** | Indicator light wired to normally closed circuit |
| **BB** | 3-foot mini-style pigtail, single pole | **8** | Roller on side plunger in vertical position |
| **DD** | 4-pin micro-style with jumper | | |

**Wobble Actuator**

| | |
|---|---|
| **7A** | Wobble, plastic |
| **7M** | Wobble, wire |
| **7N** | Wobble, cable |
| **8A** | Cat whisker, 5.5 in steel |
| **8B** | Cat whisker, 7.5 in steel |
| **8C** | Coil spring, 5.5 in |
| **8D** | Cat whisker, plastic |

**NOTE:** Not all combinations of model codes are available. Please contact your local Honeywell provider for assistance.

## ASSEMBLY MODIFICATIONS • ROTARY

Momentary action rotary switches can be furnished in other than the normal assembled conditions. To specify modifications, add the numbers shown below to the catalog listings. Modification number suffixes are:

**1** Clockwise actuation only
**2** Counterclockwise actuation only
**3** Shaft to right of switch front
**4** Shaft to left of switch front
**5** Shaft to back of switch
**7** Indicator light wired to NC circuit

**For example,**
Catalog listing LSA1A**23** is an LSA1A switch adjusted for counter-clockwise actuation only. The operating shaft is to the right side of the switch when viewing it from the front (label side). No lever.

Catalog listing LSA8A**7** is an LSA8A switch with the 240 volt indicator light wired to the NC circuit. No lever.

## PLUNGER ASSEMBLY MODIFICATIONS

Add the following modification numbers to the catalog listing in the plunger switch:

**3** Side plunger to right of switch front
**4** Side plunger to left of switch front
**5** Side plunger to back of switch
**6** Roller on top plungers perpendicular to mounting surface
**7** Light on indicator versions wired to NC circuit
**8** Roller on side plungers in vertical position

**For example,**
Catalog listing LSF1A**3** is an LSF1A switch with the side roller plunger to the right side.

## PLUG-IN VS. NON-PLUG-IN MODELS

Honeywell HDLS limit switches are offered in two styles: non-plug-in design and plug-in design. With plug-in construction, the wiring and conduit connection is made to the base receptacle. This feature reduces downtime as the plug-in unit can be removed and replaced without disconnecting the wiring or conduit connections to the switch.

## MICRO SWITCH™ HDLS SERIES ELECTRICAL RATINGS: 10 A CONTINUOUS CARRY AC VOLTS; PILOT DUTY: AC15, A600/B600

| Electrical Rating | Circuitry | Vac | Amps at 0.35 Power Factor Make | Amps at 0.35 Power Factor Break |
|---|---|---|---|---|
| A* AC15, A600 | SPDT DPDT | 120 | 60 | 6 |
| | | 240 | 30 | 3 |
| | | 480 | 15 | 1.5 |
| | | 600 | 12 | 1.2 |
| B AC15, B600 | Δ | 120 | 30 | 3 |
| | | 240 | 15 | 1.5 |
| | | 480 | 7.5 | 0.75 |
| | | 600 | 6 | 0.60 |

Δ Gravity return (Model LSS..) and extra-low torque (Model LST..)

## MICRO SWITCH™ HDLS SERIES ELECTRICAL RATINGS: DC VOLTS; PILOT DUTY: DC13, R300

| Electrical Rating | Circuitry | Vdc | Make & Break Amps Inductive | Make & Break Amps Resistive |
|---|---|---|---|---|
| A, B* | SPDT DPDT | 120 | 0.25 | 0.8 |
| | | 240 | 0.15 | 0.4 |

* For switches with an indicator light, use only at voltage stated for indicator light.

MICRO SWITCH™ HDLS limit switches are capable of the following low voltage dc loads

| Circuitry | Vdc | Amps Inductive | Amps Resistive |
|---|---|---|---|
| SPDT | 24 | 10 | 10 |
| DPDT | 24 | 10 | 10 |

# MICRO SWITCH™ Heavy-Duty Limit Switches

## MICRO SWITCH™ HDLS SERIES OPERATING HEADS

**SIDE ROTARY:** Available levers provide greater versatility. Heads may be positioned with shaft on any side. All are momentary action except maintained head (LSN Series).

**LSA - Standard:** 60° minimum overtravel, 15° maximum pretravel, 5° (single pole) and 7° (double pole) maximum differential travel. Operating temperature range from -12 °C to 121 °C [10 °F to 250 °F].*

**LSR - Low operating torque:** 60° minimum overtravel, 15° maximum pretravel, 0.19 Nm [1.7 in lb] maximum operating torque. Operating temperature range from -1 °C to 121 °C [250 °F to 250 °F].*

**LSN - Maintained contact:** Maintained on counterclockwise rotation and reset on clockwise rotation, and vice versa. Operating temperature range from -1 °C to 121 °C [30 °F to 250 °F].

**LSP - Low differential:** 68° minimum overtravel, 7° maximum pretravel, 3° (single pole) and 4° (double pole) maximum differential travel. Operating temperature range from -12 °C to 121 °C [10 °F to 250 °F].*

**LSH - Low torque, low differential travel:** 68° minimum overtravel. Features low operating torque and narrow differential travel. Operating temperature range from -1 °C to 121 °C [30 °F to 250 °F].*

**LSU - Low pretravel:** 5° max. pretravel, 70° min. overtravel, and a second step of 18° max. Operating temperature range from -12 °C to 121 °C [10 °F to 250 °F].*

**LSL - Sequence action:** 48° minimum overtravel. Delayed action between operation of two poles. Operating temperature range from -12 °C to 121 °C [10 °F to 250 °F].*

**LSM - Center neutral:** 53° minimum overtravel. One set of contacts operates on the clockwise rotation, and another set on the counterclockwise rotation. Operating temperature range from -1 °C to 121 °C [30 °F to 250 °F].*

**LST - Momentary action with extra low torque:** 12 in oz of operating and full travel torque with momentary action. Operating temperature range from -12 °C to 121 °C [10 °F to 250 °F].*

**LSS - Gravity return:** Has no return spring mechanism so weight of the lever must provide the return force. Extremely light operating torque (5 in oz max.) is useful in conveyor applications and can be operated by small or lightweight objects. Operating temperature range from -1 °C to 121 °C [30 °F to 250 °F].*

**TOP ROTARY:** Available levers provide greater versatility. Heads may be positioned with shaft on any side. All are momentary action except maintained head.

**LSB:** With 100° minimum overtravel. Various levers that fit side rotary shafts may be used on the top rotary shaft. Switch is ideal when increased overtravel is required. Momentary action. Standard operating temperature range from -1 °C to 121 °C [30 °F to 250 °F].*

**TOP PLUNGERS:** Available with 4,83 mm [0.19 in] minimum overtravel. Top pin plungers are offered in pin plunger, an adjustable plunger, and a roller plunger. Standard temperature range of -12 °C to 93 °C [10 °F to 200 °F].

**LSC - Top pin plunger:** A corrosion-resistant steel plunger for in-line actuating motion. Oil-tight seals on plunger and between the operating head and housing keep out coolant, dust, and chips. Momentary action.

**LSD - Top roller plunger:** A corrosion-resistant steel roller and plunger that is adjustable to 90° angles to accept cam or slide operation from any of two directions. Boot seal on the plunger. Momentary action

**LSV - Adjustable top pin plunger:** Provides easy application and saves on installation time. The operating points of the switch can be adjusted from 52,8 mm to 59,3 mm [2.085 in to 2.335 in]. Seals are the same as the pin plunger. Momentary action.

*(Fluorocarbon seals are preferred for temperatures above 93 °C [200 °F]).

## MICRO SWITCH™ HDLS SERIES OPERATING HEADS

**SIDE PLUNGERS:** Available with 4,83 mm [0.19 in] minimum overtravel. Side plungers are offered in plain plunger, an adjustable plain plunger, a roller plunger, and a maintained plunger. Standard temperature range of -12 °C to 93 °C [10 °F to 200 °F].

| | |
|---|---|
| | **LSE - Side pin plunger:** For actuating motion inline with the plunger travel. Actuating head may be faced in any of four positions, 90° apart. A boot seal on the plunger and a gasket seal between the head and housing keep out coolant, dust, and chips. Momentary action. |
| | **LSF - Side roller plunger:** Fits close quarters under cams and slides. The head may be faced in any of four positions, 90° apart. The roller can be turned vertical or horizontal to the switch. Boot seal on plunger. Momentary action. |

| | |
|---|---|
| | **LSW - Adjustable side pin plunger:** Has the same features of the side plain plunger plus the means to adjust the operating points of the switch from 41 mm to 47,4 mm [1.615 in to 1.865 in]. Momentary action. |
| | **LSG - Maintained contact side pin plunger:** Offers a maintained contact on actuation of the switch. A reverse motion of the plunger resets the switch. Sealing is the same as other side plunger actuation heads. Operating temperature range is -1 °C to 93 °C [30 °F to 200 °F]. |

**WOBBLE LEVER ACTUATING HEADS:** Heads come with either a spring wire, Delrin® plastic rod, or steel cat whisker. Any movement of the lever (except pull) will actuate the switch. Standard temperature range of -12 °C to 93 °C [10 °F to 200 °F].

| | | | | |
|---|---|---|---|---|
| | | | | |
| **LSJ1A-7M - Spring wire:** 300 Series SST wire may be formed for special applications. | **LSJ1A-7N - Flexible actuator:** Designed with a tin-plated cable. | **LSK1A-8C - Coil spring:** Designed with a 300 Series SST coil spring. | **LSJ1A-7A - Plastic rod:** Recommended where possible scratching or marring by the actuator is to be avoided. | **LSK1A-8A - Cat whisker:** 300 Series SST actuator designed for low operating force applications. |

**(Fluorocarbon seals are preferred for temperatures above 93 °C [200 °F]).*

# MICRO SWITCH™ Heavy-Duty Limit Switches

## SPECIAL OPTIONS

### HIGH TEMPERATURE/CHEMICAL RESISTANT SWITCHES

Completely fluorocarbon (FC)-sealed switches have a full FC body gasket coving the switch cavity. Rotary types have an extra FC seal on the operating shaft, while plunger versions have FC boot seals. They are for use in many applications where the environment includes fire-resistant synthetic fluids. In addition to most all fluids, the FC-sealed switches may be used with such industrial fluids such as Cellulube, Fyrquell, Houghto-Safe, Pydraul, and other special cutting and hydraulic fluids. The additional FC seals also promote longer operating life for rotary-actuated HDLS switches in applications where the temperatures are normally -12 °C to 121 °C [10 °F to 250 °F]. If pre-wired with cable, then temperature limits are 105 °C [221 °F] dry and 60 °C [140 °F] wet.

To order, insert the additional letters **Y** and **C** in the appropriate places in the standard catalog listing, as shown below:

| | |
|---|---|
| **LSA1A** | standard, side-rotary plug-in switch |
| **LSYAC1A** | completely FC-sealed version of LSA1A |

### LOW TEMPERATURE SWITCHES

All forms of HDLS limit switches are also available in low-temperature construction. Design features include fluorosilicone diaphragm, shaft seals, and external booth seal (where applicable). If pre-wired with a cable, low temperature limits are
-10 °C [14 °F] flex and -30 °C [-22 °F] non-flex.

To order, insert the additional letters **Y** and **B** in the appropriate places in the standard catalog listing, as shown below:

| | |
|---|---|
| **LSA1A** | standard, side-rotary plug-in switch |
| **LSYAB1A** | low-temperature version of LSA1A |

### CONDUIT OPENINGS

For conduit openings other than 1/2-NPT and 3/4-NPT, subsitute the following after LS in the catalog listing:

**LS3** PG13,5

**LS4** 20 mm

| | |
|---|---|
| **LSA1A** | side rotary with 1/2-14 NPT conduit |
| **LS4A1A** | side rotary with 20 mm conduit |

### TEMPERATURE LIMITS

| | Standard HDLS | | | | Low Temperature HDLS (Fluorosilicone Sealed): Y_B | | | | High Temperature HDLS (Fluorocarbon Sealed)*: Y_C | | |
|---|---|---|---|---|---|---|---|---|---|---|---|
| | Low Limit | | High Limit | | Low Limit | | High Limit | | Low Limit | | High Limit |
| | -12 °C [10 °F] | -1 °C [30 °F] | 93 °C [200 °F] | 121 °C [250 °F] | -40 °C [-40°F] | -29 °C [-20 °F] | 93 °C [200 °F] | 121 °C [250 °F] | -12 °C [10 °F] | -1 °C [30 °F] | 121 °C [250 °F] |
| LSA - Side Rotary Momentary | X | | | X | X | | | X | X | | X |
| LSB - Top Rotary | | X | | X | | X | | X | | X | X |
| LSC - Top Plain Plunger | X | | X | | X | | X | | X | | X |
| LSD - Top Roller Plunger | X | | X | | X | | X | | X | | X |
| LSE - Side Plain Plunger | X | | X | | X | | X | | X | | X |
| LSF - Side Roller Plunger | X | | X | | X | | X | | X | | X |
| LSG - Side Plunger, Maintained | | X | X | | | X | X | | | X | X |
| LSH - Side Rotary, Low PT, Low Torque | | X | | X | | X | | X | | X | X |
| LSJ - Wobble Stick | X | | X | | X | | | X | X | | X |
| LSK - Cat Whisker | X | | X | | | X | | X | X | | X |
| LSL - Side Rotary, Sequence | X | | | X | X | | | X | X | | X |
| LSM - Side Rotary, Center Neutral | | X | | X | X | | | X | | X | X |
| LSN - Side Rotary, Maintained | | X | | X | | X | | X | | X | X |
| LSP - Side Rotary, Low Pretravel | X | | | X | X | | | X | X | | X |
| LSR - Side Rotary, Low Torque | | X | | X | | X | | X | | X | X |
| LSU - 5º Low Pretravel | X | | | X | X | | | X | X | | X |
| LSV - Top Adjustable Plunger | X | | X | | X | | X | | X | | X |
| LSW - Side Adjustable Plunger | X | | X | | X | | X | | X | | X |

* For HDLS application wherein the upper temperature limit is normally above 93 °C [200 °F], much longer switch life can be obtained by using completely fluorocarbon-sealed switches rather than standard HDLS.

## FACTORY SEALED PRE-WIRED LIMIT SWITCHES

**Features**

- Pre-wired with 6 ft STOOW-A cable or other 4, 5, or 9-pin connectors (other lengths available
- Wire entry area completely factory sealed
- (Cable version) NEMA 1, 6, 6P, 12; IP67
- (Connector version) NEMA 1, 6, 6P, 12, 13; IP67

**How to order:**

To order factory sealed switches, add the modification codes shown below to the standard HDLS listings:

| Circuitry | Cable | 1/2 in connector style |
|---|---|---|
| SPDT | **C** | **A** (4-pin mini-style)<br>**B** (5-pin mini-style)<br>**DD** (4-pin micro-style) |
| DPDT | **M** | **R** (9-pin mini-style) |

Examples:

LSA1A**C** = LSA1A with 6 feet of 5-conductor STOW-A cable

LSJ2B**M**-7N = LSJ2B-7N with 6 feet of 9-conductor STOOW-A cable

LSA1A**B** = LSA1A with a 5-pin mini-style connector

LSA1A**DD** = LSA1A with a 4-pin micro-style connector

**NOTE:** Connector versions available with 1/2 in conduit only.

## WIRING DIAGRAM (STYLE A)

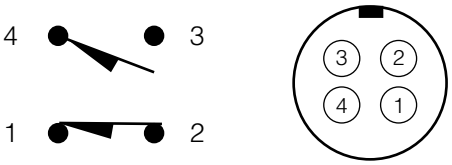


## WIRING DIAGRAM (STYLE DD)

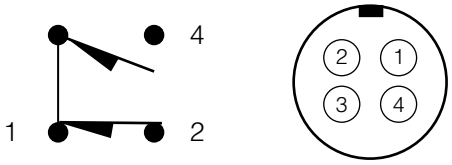


Pin 3 not connected

## WIRING DIAGRAMS (STYLES B&G)

Connectors = Numbers (mini-style)

Cables = Colors

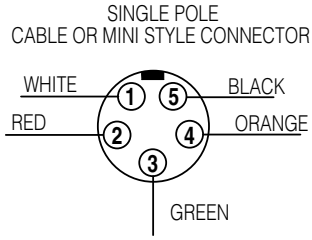


Single-Pole Circuitry

3 = Ground

**Electrical Ratings:**
**Connector Versions**

| | |
|---|---|
| Mini | 600 VAC, 7A |
| Micro | 300 VAC, 3A |

## WIRING DIAGRAMS (STYLES M&R)

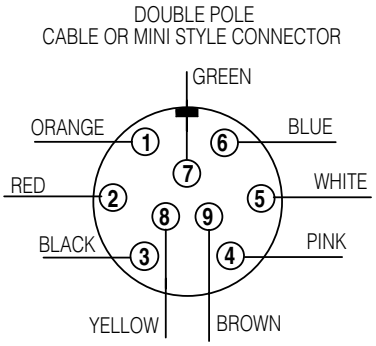


Double-Pole Circuitry

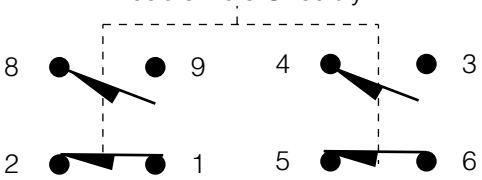


7 = Ground

# MICRO SWITCH™ Heavy-Duty Limit Switches

## SIDE ROTARY • MICRO SWITCH™ HDLS SERIES ORDER GUIDE/RECOMMENDED LISTINGS

| | Standard (LSA) | | Low Differential (LSP) | | 5° Pretravel (LSU) | |
|---|---|---|---|---|---|---|
| **Description** | Standard | | Low pretravel & low differential travel | | Low pretravel | |
| | **SPDT** | **DPDT** | **SPDT** | **DPDT** | **SPDT** | **DPDT** |
| **Contact closed ■ Contact open □** | 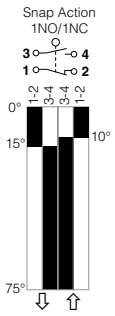 | 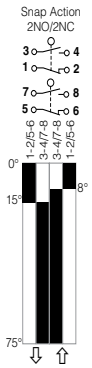 | 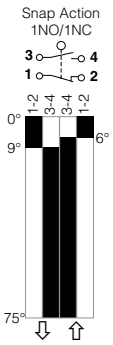 | 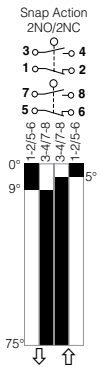 | 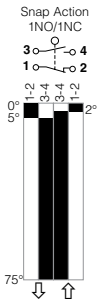 | 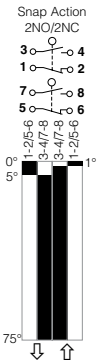 |
| **Pretravel** | 15° max. | 15° max. | 9° max. | 9° max. | 5° max. | 5° max. |
| **Different. travel** | 5° max. | 7° max. | 3° max. | 4° max. | 3° max. | 4° max. |
| **Overtravel** | 60° min. | 60° min. | 66° min. | 66° min. | 70° min. | 70° min. |
| **Oper. torque** | 0,45 Nm [4 in-lb] max. | | 0,45 Nm [4 in-lb] max. | | 0,45 Nm [4 in-lb] max. | |
| **Action** | CW & CCW (Momentary) | | | | | |
| **Op. temp range[3]** | -12 °C to 121 °C [10 °F to 250 °F] (for low temp, high temp, or preleaded versions, see pages 11-12) | | | | | |

| Circuitry | | Contacts | Body Style[2] | Conduit (NPT) | Options | | | |
|---|---|---|---|---|---|---|---|---|
| SPDT | 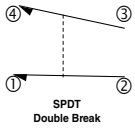 SPDT Double Break | Silver | Plug-in | 0.5 in | | **LSA1A** | **LSP1A** | **LSU1A** |
| | | Gold[4] | Plug-in | 0.5 in | | **LSA1E** | **LSP1E** | **LSU1E** |
| | | Silver | Plug-in | 0.5 in | 120 V Ind. lite[1] | **LSA5A** | **LSP5A** | **LSU5A** |
| | | Silver | Plug-in | 0.5 in | 240 V Ind. lite[1] | **LSA8A** | **LSP8A** | **LSU8A** |
| | | Silver | Plug-in | 0.5 in | 24 V LED 1.5 mA max. auto polarity[1] | **LSA9A** | **LSP9A** | **LSU9A** |
| | | Silver | Non-plug-in | 0.5 in | | **LSA3K** | **LSP3K** | **LSU3K** |
| DPDT | 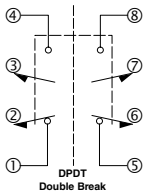 DPDT Double Break | Silver | Plug-in | 0.75 in | | **LSA2B** | **LSP2B** | **LSU2B** |
| | | Gold[4] | Plug-in | 0.75 in | | **LSA2S** | **–** | **–** |
| | | Silver | Plug-in | 0.5 in | | **LSA6B** | **LSP6B** | **LSU6B** |
| | | Gold[4] | Plug-in | 0.5 in | | **LSA6S** | **–** | **–** |
| | | Silver | Plug-in | 0.75 in | 120 V Ind. lite[1] | **LSA2R** | **LSP2R** | **LSU2R** |
| | | Silver | Non-plug-in | 0.75 in | | **LSA4L** | **LSP4L** | **LSU4L** |
| | | Silver | Non-plug-in | 0.5 in | | **LSA7L** | **LSP7L** | **LSU7L** |

[1] Use at voltage indicated for light. Wired to NO circuit. Upper temperature limit for lighted units is 93 °C [200 °F]
[2] Plug-in listings include base receptacle
[3] Completely fluorocarbon sealed switches are preferred for use in temperatures above 93 °C [200 °F]
[4] Gold-plated contacts

NOTE: Same polarity each pole.

To order a fluorocarbon sealed switch, insert the letters **Y** and **C** into the catalog listing as follows. The LSA1A limit switch is changed to a LS**Y**A**C**1A limit switch.
To order a low temperature, fluorosilicone sealed switch, insert the letters **Y** and **B** into the catalog listing as follows. The LSA1A limit switch is changed to a LS**Y**A**B**1A limit switch.

## SIDE ROTARY • MICRO SWITCH™ HDLS SERIES ORDER GUIDE/RECOMMENDED LISTINGS

| | Low Torque (LSR) | | Low Diff., Low Torque (LSH) | |
|---|---|---|---|---|
| **Description** | Low operating torque | | Low pretravel and low torque | |
| | **SPDT** | **DPDT** | **SPDT** | **DPDT** |
| **Contact closed ■**<br>**Contact open □** | Snap Action 1NO/1NC<br> 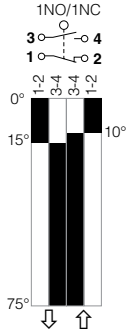 | Snap Action 2NO/2NC<br> 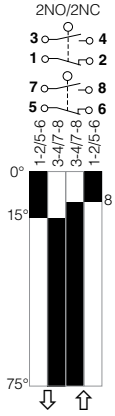 | Snap Action 1NO/1NC<br> 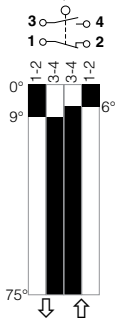 | Snap Action 2NO/2NC<br> 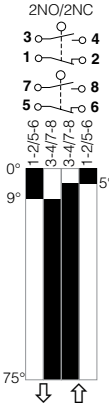 |
| **Pretravel** | 15° max. | 15° max. | 9° max. | 9° max. |
| **Different. travel** | 5° max. | 7° max. | 3° max. | 4° max. |
| **Overtravel** | 60° min. | 60° min. | 66° min. | 66° min. |
| **Oper. torque** | 0,19 Nm [1.7 in-lb] max. | | 0,19 Nm [1.7 in-lb] max. | |
| **Action** | CW & CCW (Momentary) | | | |
| **Op. temp range[3]** | -1 °C to 121 °C [30 °F to 250°F] (for low temp, high temp, or preleaded versions, see pages 11-12) | | | |

| Circuitry | | Contacts | Body Style[2] | Conduit (NPT) | Options | | |
|---|---|---|---|---|---|---|---|
| SPDT | 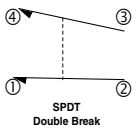 SPDT Double Break | Silver | Plug-in | 0.5 in | | **LSR1A** | **LSH1A** |
| | | Gold[4] | Plug-in | 0.5 in | | **LSR1E** | **LSH1E** |
| | | Silver | Plug-in | 0.5 in | 120 V Ind. lite[1] | **LSR5A** | **LSH5A** |
| | | Silver | Plug-in | 0.5 in | 240 V Ind. lite[1] | **LSR8A** | **LSH8A** |
| | | Silver | Plug-in | 0.5 in | 24 V LED 1.5 mA max. auto polarity[1] | **LSR9A** | **LSH9S** |
| | | Silver | Non-plug-in | 0.5 in | | **LSR3K** | **LSH3K** |
| DPDT | 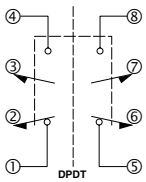 DPDT Double Break | Silver | Plug-in | 0.75 in | | **LSR3B** | **LSH2B** |
| | | Silver | Plug-in | 0.5 in | | **LSR6B** | **LSH6B** |
| | | Silver | Plug-in | 0.75 in | 120 V Ind. lite[1] | **LSR2R** | **LSH2R** |
| | | Silver | Non-plug-in | 0.75 in | | **LSR4L** | **LSH4L** |
| | | Silver | Non-plug-in | 0.5 in | | **LSR7L** | **LSHJ7L** |

[1] Use at voltage indicated for light. Wired to NO circuit. Upper temperature limit for lighted units is 93°C [200 °F]
[2] Plug-in listings include base receptacle
[3] Completely fluorocarbon sealed switches are preferred for use in temperatures above 93 °C [200 °F]
[4] Gold-plated contacts

NOTE: Same polarity each pole.

To order a fluorocarbon sealed switch, insert the letters **Y** and **C** into the catalog listing as follows. The LSA1A limit switch is changed to a LS**Y**A**C**1A limit switch.
To order a low temperature, fluorosilicone sealed switch, insert the letters **Y** and **B** into the catalog listing as follows. The LSA1A limit switch is changed to a LS**Y**A**B**1A limit switch.

# MICRO SWITCH™ Heavy-Duty Limit Switches

## SIDE ROTARY • MICRO SWITCH™ HDLS SERIES ORDER GUIDE/RECOMMENDED LISTINGS

| | Maint. Contact (LSQ) | Maint. Contact (LSN) | | Center Neutral (LSM) | Sequence Action (LSL) |
|---|---|---|---|---|---|
| **Description** | Maint. 360° Alt. Action | Maintained, 2-pos[1,2]. Std. | | Center Neutral (Pole 1 operates CCW; Pole 2 operates CW) | Sequential (Pole 1 operates before Pole 2, either CW, CCW, or both) |
| | **SPDT** | **SPDT** | **DPDT** | **DPDT** | **DPDT** |
| **Contact closed ■ Contact open □** | 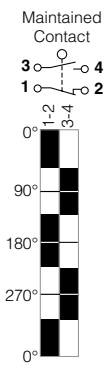  | 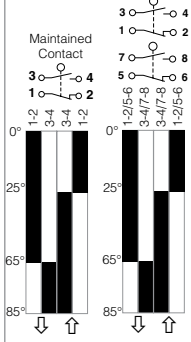  | | 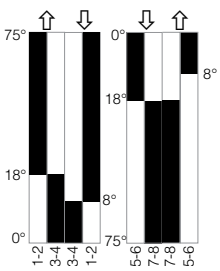  | 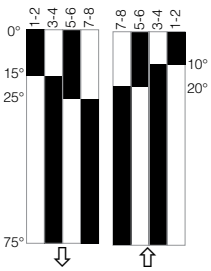  |
| **Pretravel** | 65° max. | 65° max. | | 18° max. | Pole 1: 15° Pole 2: add'l 10° |
| **Different. travel** | 40° max. | 40° max. | | 10° max. | each pole: 5° |
| **Overtravel** | 20° min. | 20° min. | | 57° min. | 48° min. |
| **Oper. torque** | 0,45 Nm [4 in-lb] | | | 0,45 Nm [4 in-lb] | 0,45 Nm [4 in-lb] |
| **Action** | Maintained | | | CW & CCW (Momentary) | |
| **Op. temp range[6]** | -1 °C to 121 °C [30 °F to 250°F] (for low temp, high temp, or preleaded versions, see page 11-12) | | | | -12 °C to 121 °C [10 °F to 250°F] (for low temp, high temp, or pre-leaded versions, see page 11-12) |

| Circuitry | | Contacts | Body Style[5] | Conduit (NPT) | Options | | | | |
|---|---|---|---|---|---|---|---|---|---|
| SPDT | 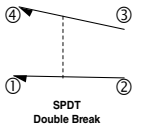  | Silver | Plug-in | 0.5 in | | **LSQ300** | **LSN1A** | 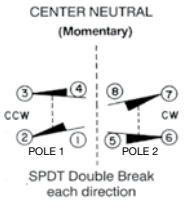  | 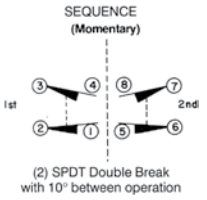  |
| | | Gold[3] | Plug-in | 0.5 in | | – | **LSN1E** | | |
| | | Silver | Plug-in | 0.5 in | 120 V Ind. lite[4] | – | **LSN5A** | | |
| | | Silver | Plug-in | 0.5 in | 240 V Ind. lite[4] | – | **LSN8A** | | |
| | | Silver | Non-plug-in | 0.5 in | | – | **LSN3K** | | |
| DPDT | 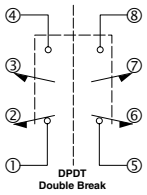  | Silver | Plug-in | 0.75 in | | – | **LSN2B** | **LSM2D** | **LSL2C** |
| | | Silver | Plug-in | 0.5 in | | – | **LSN6B** | **LSM6D** | **LSL6C** |
| | | Gold[3] | Plug-in | 0.5 in | | – | – | **LSM6U** | – |
| | | Silver | Non-plug-in | 0.75 in | | – | **LSN4L** | **LSM4N** | **LSL4M** |
| | | Silver | Non-plug-in | 0.5 in | | – | **LSN7L** | **LSM7N** | **LSL7M** |

[1] Mechanical trip before electrical trip.
[2] Total travel is approximately 80° max. Maintained contact switch normally used with LSZ53 yoke actuator.
[3] Gold-plated contacts
[4] Use at voltage indicated for light. Wired to NO circuit. Upper temperature limit for lighted units is 93°C [200 °F].
[5] Plug-in listings include base receptacle
[6] Completely fluorocarbon-sealed switches are preferred for temperatures above 93 °C [200 °F].

NOTE: Same polarity each pole.

To order a fluorocarbon sealed switch, insert the letters **Y** and **C** into the catalog listing as follows. The LSA1A limit switch is changed to a LS**Y**A**C**1A limit switch.
To order a low temperature, fluorosilicone sealed switch, insert the letters **Y** and **B** into the catalog listing as follows. The LSA1A limit switch is changed to a LS**Y**A**B**1A limit switch.

**Figure 2. MICRO SWITCH™ HDLS side rotary (single pole) dimensions**

**SPDT Plug-in (mm[in])**

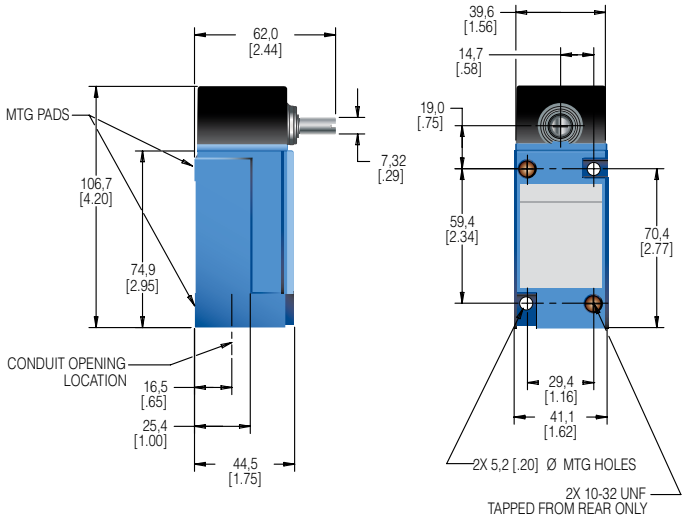


**SPDT Non-plug-in (mm[in])**

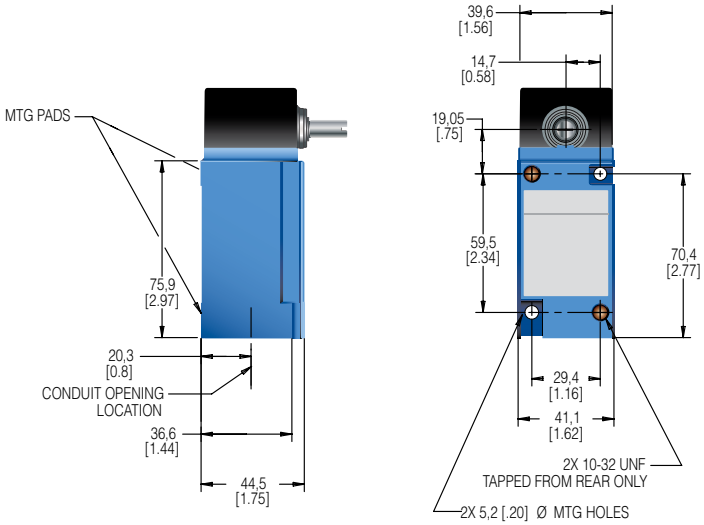


**Figure 3. MICRO SWITCH™ HDLS side rotary (double pole) dimensions**

**DPDT Plug-in (mm[in])**

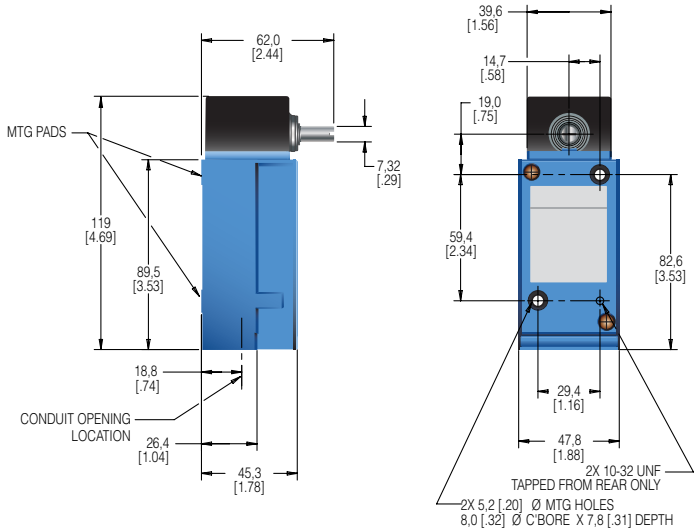


**DPDT Non-plug-in (mm[in])**

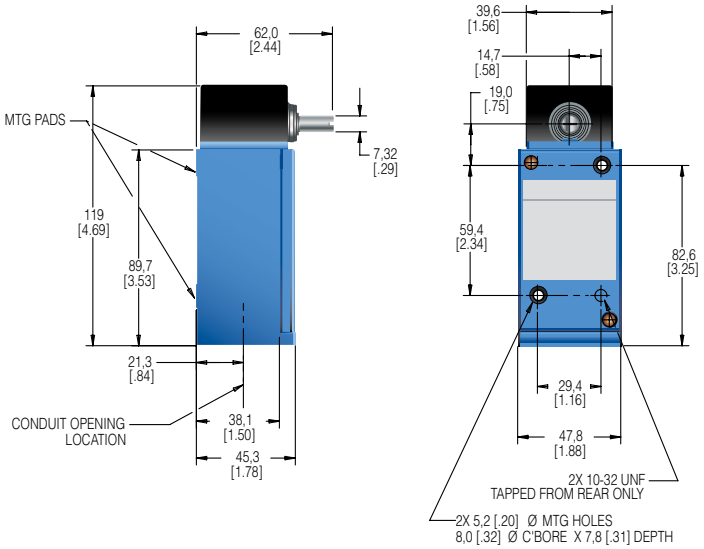

# MICRO SWITCH™ Heavy-Duty Limit Switches

## TOP ROTARY • MICRO SWITCH™ HDLS SERIES ORDER GUIDE/RECOMMENDED LISTINGS

| | Top Rotary (LSB) | |
|---|---|---|
| **Description** | Increased overtravel (100° min.). Uses same levers as side rotary | |
| | **SPDT** | **DPDT** |
| **Contact closed ■**<br>**Contact open □** | Snap Action<br>1NO/1NC<br> 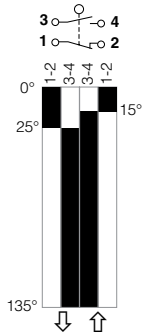 | Snap Action<br>2NO/2NC<br> 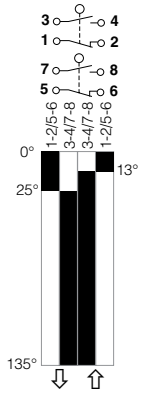 |
| **Pretravel** | 25° max. | 25° max. |
| **Different. travel** | 10° max. | 12° max. |
| **Overtravel** | 110° min. | 110° min. |
| **Oper. torque** | 0,28 Nm [2.5 in lb] max. | |
| **Op. temp range[3]** | -12 °C to 121 °C [10 °F to 250 °F] (for low temp, high temp, or preleaded versions, see pages 11-12) | |

| Circuitry | | Contacts | Body Style[2] | Conduit (NPT) | Options | | |
|---|---|---|---|---|---|---|---|
| SPDT | 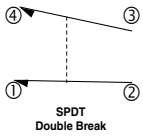 | Silver | Plug-in | 0.5 in | | **LSB1A** | – |
| | | Gold[4] | Plug-in | 0.5 in | | **LSB1E** | – |
| | | Silver | Plug-in | 0.5 in | 120 V Ind. lite[1] | **LSB5A** | – |
| | | Silver | Plug-in | 0.5 in | 240 V Ind. lite[1] | **LSB8A** | – |
| | | Silver | Plug-in | 0.5 in | 24 V LED 1.5 mA max. auto polarity[1] | **LSB9A** | – |
| | | Silver | Non-plug-in | 0.5 in | | **LSB3K** | – |
| DPDT | 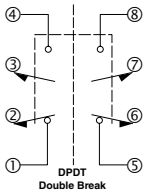 | Silver | Plug-in | 0.75 in | | – | **LSB2B** |
| | | Silver | Plug-in | 0.5 in | | – | **LSB6B** |
| | | Silver | Plug-in | 0.75 in | 120 V Ind. lite[1] | – | **LSB2R** |
| | | Silver | Non-plug-in | 0.75 in | | – | **LSB4L** |
| | | Silver | Non-plug-in | 0.5 in | | – | **LSB7L** |

[1] Use at voltage indicated for light. Wired to NO circuit. Upper temperature limit for lighted units is 93 °C [200 °F]
[2] Plug-in listings include base receptacle
[3] Completely fluorocarbon sealed switches are preferred for use in temperatures above 93 °C [200 °F]
[4] Gold-plated contacts

NOTE: Same polarity each pole.

To order a fluorocarbon sealed switch, insert the letters **Y** and **C** into the catalog listing as follows. The LSA1A limit switch is changed to a LS**Y**A**C**1A limit switch.
To order a low temperature, fluorosilicone sealed switch, insert the letters **Y** and **B** into the catalog listing as follows. The LSA1A limit switch is changed to a LS**Y**A**B**1A limit switch.

**Figure 4. MICRO SWITCH™ HDLS top rotary (single pole) dimensions**

**Figure 5. MICRO SWITCH™ HDLS top rotary (double pole) dimensions**

### SPDT Plug-in (mm[in])

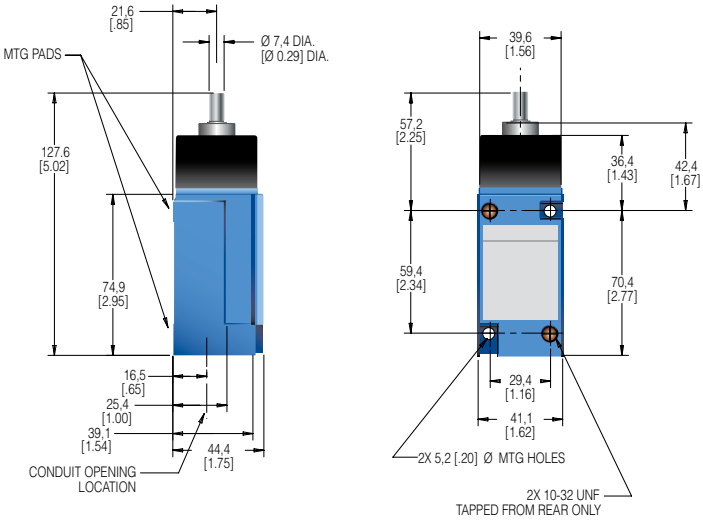


### DPDT Plug-in (mm[in])

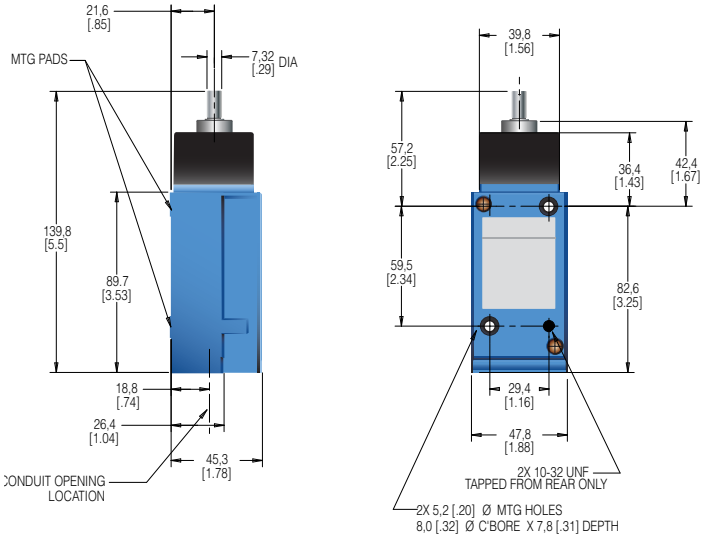


### SPDT Non-plug-in (mm[in])

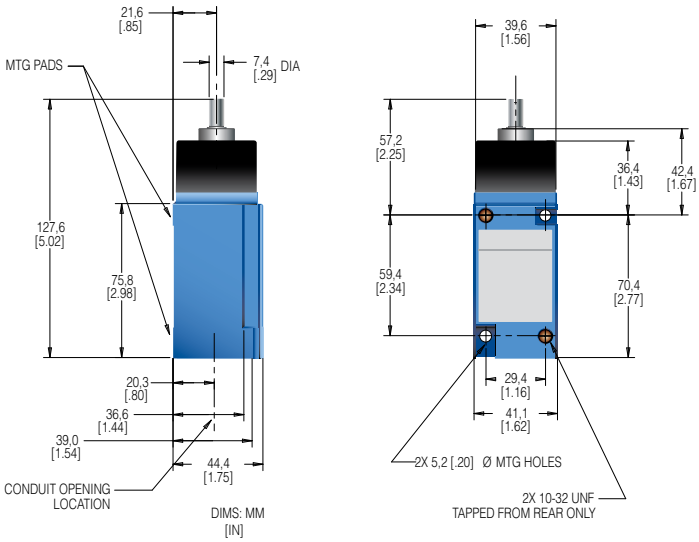


### DPDT Non-plug-in (mm[in])

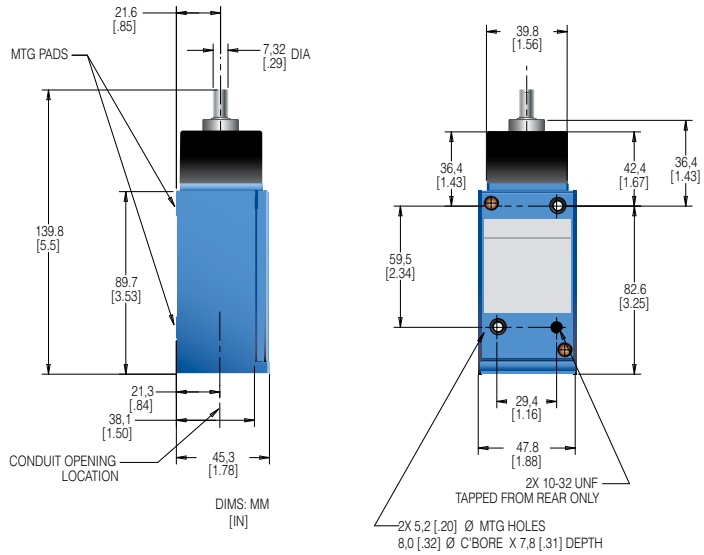

# MICRO SWITCH™ Heavy-Duty Limit Switches

**Table 2. Common levers for use with MICRO SWITCH™ HDLS Rotary Switches**

Levers for use with side or top rotary actuated switches are available in a wide choice of sizes and materials. The most common listings are shown below. Rollers may be on either side of the lever to best match the external acutating mechanism.

| | | | | | | | |
|---|---|---|---|---|---|---|---|
| | | | | 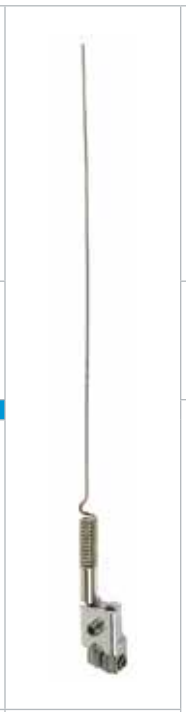 | | | |
| **LSZ51A&C** fixed rotary lever, nylon roller, front/ backl | **LSZ51B&D** fixed rotary lever, steel roller, front/ back | **LSZ59A,LSZ59B, LSZ59C,LSZ59D** short fixed lever, front/back | | | **LSZ69CA** spoke lever - 152 mm [6 in] | | |
| | | | | | | | |
| **LSZ55A,LSZ55B, LSZ55C,LSZ55D** offset lever, front/back | **LSZ60** one-way roller lever | **LSZ53A, LSZ53B, LSZ53C, LSZ53D** yoke lever, nylon and steel rollers, front/back placement | | **LSZ54R** spring wire 305 mm [12 in] | | | |
| | | | | | | | |
| **LSZ52A, LSZ52B, LSZ52C, LSZ52D** adj. lever, nylon/ steel, front/back | **LSZ52J** adjustable lever, nylon roller Ø 25,4 mm [Ø 1 in] | **LSZ52K** adjustable lever, nylon roller Ø 38,1 mm [Ø 1.5 in] | **LSZ54M** aluminum rod Ø 140 mm [Ø 5.5 in] | **LSZ61** loop 152 mm [6 in] | **LSZ67AA*** Plastic conveyor roller | **LSZ68** rod w/ spring 305 mm [12 in] | **LSZ54N** stainless steel rod 330 mm [13 in] |

* May require orientation of switch and lever to enable gravity to help restore free position of switch.

### Table 3. HDLS SERIES ACTUATOR CODE TABLE (see previous page)

| | Catalog Listing | Material | Rod/Roller Dia. mm [in] | Rod/Roller Width mm [in] | Roller Mounting |
|---|---|---|---|---|---|
| | **Fixed 38,1 mm [1.5 in] radius** | | | | |
| | – | Rollerless | n/a | n/a | n/a |
| | LSZ51A | Nylon | 19 [0.75] | 6,35 [0.25] | Front |
| | LSZ51B | Steel | 19 [0.75] | 6,35 [0.25] | Front |
| | LSZ51C | Nylon | 19 [0.75] | 6,35 [0.25] | Back |
| | LSZ51D | Steel | 19 [0.75] | 6,35 [0.25] | Back |
| | LSZ51F | Nylon | 25,4 [1.0] | 12,7 [0.50] | Front |
| | LSZ51G | Nylon | 38,1 [1.5] | 6,35 [0.25] | Front |
| | LSZ51J | Nylon | 25,4 [1.0] | 12,7 [0.50] | Back |
| | LSZ51L | Ball bearing | 19 [0.75] | 6,35 [0.25] | Back |
| | LSZ51M | Nylon | 19 [0.75] | 31,7 [1.25] | Back |
| | LSZ51N | Steel | 19 [0.75] | 31,7 [1.25] | Front |
| | LSZ51P | Nylon | 19 [0.75] | 12,7 [0.50] | Front |
| | **Adjustable 38,1 mm to 89,0 mm [1.5 in to 3.5 in] radius** | | | | |
| | – | Rollerless | n/a | n/a | n/a |
| | LSZ52A | Nylon | 19 [0.75] | 6,35 [0.25] | Back |
| | LSZ52B | Steel | 19 [0.75] | 6,35 [0.25] | Back |
| | LSZ52C | Nylon | 19 [0.75] | 6,35 [0.25] | Front |
| | LSZ52D | Steel | 19 [0.75] | 6,35 [0.25] | Front |
| | LSZ52E | Nylon | 19 [0.75] | 33,0 [1.30] | Front |
| | LSZ52J | Nylon | 25,4 [1.0] | 12,7 [0.50] | Front |
| | LSZ52K | Nylon | 38,1 [1.5] | 6,35 [0.25] | Front |
| | LSZ52L | Ball bearing | 19 [0.75] | 6,35 [0.25] | Front |
| | LSZ52M | Nylon | 50,8 [2.0] | 6,35 [0.25] | Front |
| | LSZ52N | Nylon | 19 [0.75] | 12,7 [0.50] | Front |
| | **Yoke – 38,1 mm [1.5 in] radius** | | | | |
| | LSZ53A | Nylon | 19 [0.75] | 6,35 [0.25] | Front/Back |
| | LSZ53B | Steel | 19 [0.75] | 6,35 [0.25] | Front/Back |
| | LSZ53D | Steel | 19 [0.75] | 6,35 [0.25] | Front/Front |
| | LSZ53E | Nylon | 19 [0.75] | 6,35 [0.25] | Back/Front |
| | LSZ53M | Nylon | 19 [0.75] | 31,7 [1.25] | Back/Front |
| | LSZ53P | Steel | 19 [0.75] | 6,35 [0.25] | Back/Back |
| | LSZ53S | Nylon | 19 [0.75] | 6,35 [0.25] | Back/Back |
| | **Rod** | | | | |
| | – | Hub only | n/a | n/a | n/a |
| | LSZ54M | Alum, 140 mm [5.5 in] | Ø 3,2 [Ø 0.125] | n/a | n/a |
| | LSZ54N | Stainless, 330 mm [13 in] | Ø 3,2 [Ø 0.125] | n/a | n/a |
| | LSZ54R | SST spring wire, 305 mm [12 in] | Ø 1,9 [Ø 0.075] | n/a | n/a |
| | LSZ54V | Flex cable (tin plated steel), 122 mm [4.8 in] | Ø 4,8 [Ø 0.19] | n/a | n/a |
| | LSZ54P | Plastic rod, 305 mm [12 in] | Ø 6,85 [Ø 0.27] | n/a | n/a |
| | LSZ54W | Plastic rod, 183 mm [7.2 in] | Ø 6,85 [Ø 0.27] | n/a | n/a |
| | LSZ59T | 330 [13] stainless steel | Ø 4,8 [Ø 0.19] | n/a | n/a |
| | **Spoke** | | | | |
| | LSZ69CA | 152 mm [6.0 in] Stainless | 3,2 [0.125] | n/a | n/a |

| | Catalog Listing | Material | Rod/Roller Dia. mm [in] | Rod/Roller Width mm [in] | Roller Mounting |
|---|---|---|---|---|---|
| | **Fixed 38,1 mm [1.5 in] radius** | | | | |
| | – | Rollerless | n/a | n/a | n/a |
| | LSZ55A | Nylon | 19 [0.75] | 6,35 [0.25] | Back |
| | LSZ55B | Steel | 19 [0.75] | 6,35 [0.25] | Back |
| | LSZ55C | Nylon | 19 [0.75] | 6,35 [0.25] | Front |
| | LSZ55D | Steel | 19 [0.75] | 6,35 [0.25] | Front |
| | LSZ55E | Nylon | 19 [0.75] | 12,7 [0.50] | Front |
| | LSZ55K | Nylon | 38,1 [1.5] | 6,35 [0.25] | Front |
| | **Short fixed - 33 mm [1.3 in] radius** | | | | |
| | LSZ59A | Nylon | 19 [0.75] | 6,35 [0.25] | Front |
| | LSZ59B | Steel | 19 [0.75] | 6,35 [0.25] | Front |
| | LSZ59C | Nylon | 19 [0.75] | 6,35 [0.25] | Back |
| | LSZ59D | Steel | 19 [0.75] | 6,35 [0.25] | Back |
| | **38,1 mm [1.5 in] radius one-way roller lever** | | | | |
| | LSZ60A | Nylon | 19 [0.75] | 6,35 [0.25] | Front |
| | LSZ60B | Steel | 19 [0.75] | 6,35 [0.25] | Front |
| | **Flexible loop** | | | | |
| | LSZ61 | Ø 4,8 [Ø 0.19] Nylatron | 152 mm [6 in] flexible loop | | |
| | LSZ618 | Ø 4,8 [Ø 0.19] Nylatron | 241 mm [9.5 in] flexible loop | | |
| | LSZ54 | Hub only | n/a | n/a | n/a |
| | **Spring rod** | | | | |
| | LSZ68 | Delrin rod, 305 [12 ] | Ø 6,35 [Ø 0.25] | n/a | n/a |
| | LSZ617 | Delrin rod, 406 [16] | Ø 6,35 [Ø 0.25] | n/a | n/a |
| | LSZ686 | Delrin rod, 152 [6] | Ø 6,35 [Ø 0.25] | n/a | n/a |
| | **Rubber roller levers** | | | | |
| | LSZ51Y 38,1 mm [1.5 in] radius (std.) | Rubber | 50 [2.0] | 12,7 [0.50] | front |
| | LSZ55Y 38,1 mm [1.5 in] radius (offset) | Rubber | 50 [2.0] | 12,7 [0.50] | front |
| | LSZ52Y 38,1 mm to 89,0 mm [1.5 in to 3.5 in] radius (adjustable) | Rubber | 50 [2.0] | 12,7 [0.50] | front |
| | **Plastic roller levers** | | | | |
| | LSZ67AA* (conveyor) | Plastic | 38,1 [1.5] | 96,5 [3.8] | n/a |

* may require orientation of switch and lever to enable gravity to help restore free position of switch.

## MICRO SWITCH™ HDLS SIDE ROTARY LEVERS' CAM TRACKING

Levers for side and top rotary switches are normally ordered as separate catalog listings. They also may be ordered by including a suffix to the switch catalog listing (see nomenclature tree in this document) and adding the lever price.

**Figure 6. LSZ51 type levers cam tracking**

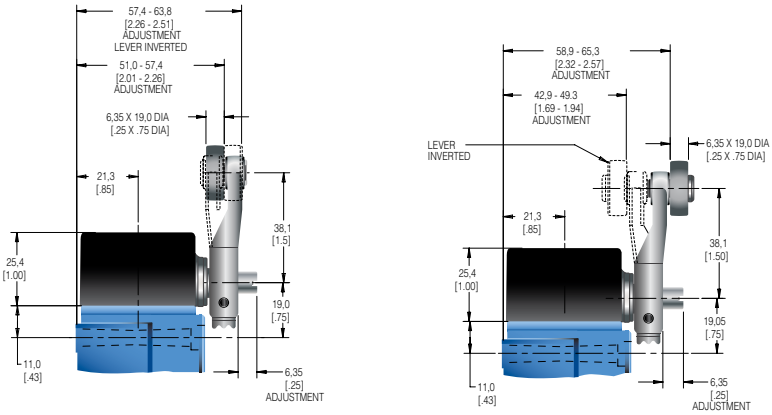


**Figure 7. LSZ52 type levers cam tracking**

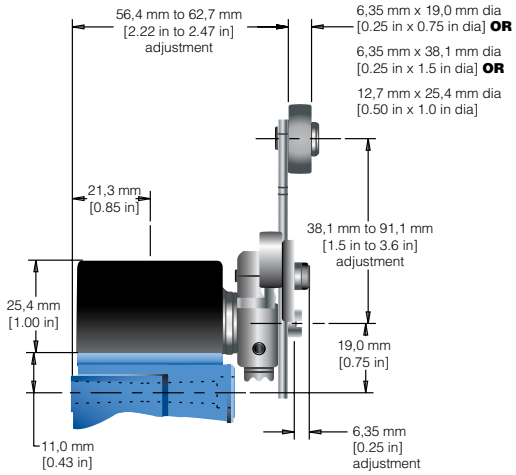


**Figure 8. LSZ54 type levers cam tracking**

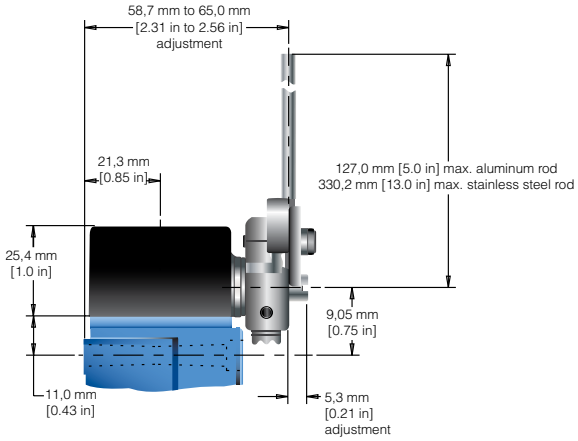


**Figure 9. LSZ55 type levers cam tracking**

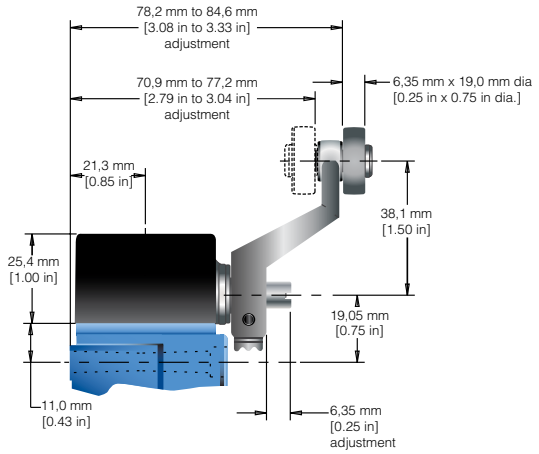

## TOP PLUNGERS • MICRO SWITCH™ HDLS SERIES ORDER GUIDE/RECOMMENDED LISTINGS

All top plungers are momentary action.

| | Plain (LSC) | | Roller (LSD) | | Adjustable (LSV) | |
|---|---|---|---|---|---|---|
| | | | | | | |
| **Description** | Top plain plunger for in-line operating motion | | Roller plunger can be rotated at 90° increments | | Adjustable top plain plunger | |
| | **SPDT** | **DPDT** | **SPDT** | **DPDT** | **SPDT** | **DPDT** |
| **Contact closed ■ Contact open □** | 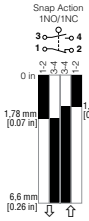 | 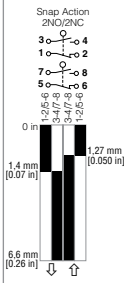 | 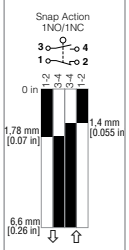 | 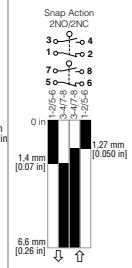 | | 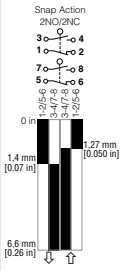 |
| **Pretravel** | 1,78 mm [0.07 in] | | | | | |
| **Different. travel** | 0,38 mm [0.015 in] | 0,51 mm [0.02 in] | 0,38 mm [0.015 in] | 0,51 mm [0.02 in] | 0,38 mm [0.015 in] | 0,51 mm [0.02 in] |
| **Overtravel** | 4,83 mm [0.19 in] | | | | | |
| **Operating point (nom.)** | 45,8 mm [1.805 in] | | 55,9 mm [2.20 in] | | 53 mm to 59 mm [2.08 in to 2.34 in] | |
| **Operating force** | 17,8 N [4 lb] max. | | | | | |
| **Op. temp range[3]** | -12 °C to 93 °C [10 °F to 200 °F] (for low temp, high temp, or preleaded versions, see page 11-12) | | | | | |

| | Circuitry | Contacts | Body Style[2] | Conduit (NPT) | Options | | | |
|---|---|---|---|---|---|---|---|---|
| SPDT | 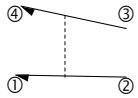 SPDT Double Break | Silver | Plug-in | 0.5 in | | **LSC1A** | **LSD1A** | **LSV1A** |
| | | Gold[4] | Plug-in | 0.5 in | | **LSC1E** | **LSD1E** | **LSV1E** |
| | | Silver | Plug-in | 0.5 in | 120 V Ind. lite[1] | **LSC5A** | **LSD5A** | **LSV5A** |
| | | Silver | Plug-in | 0.5 in | 240 V Ind. lite[1] | **LSC8A** | **LSD8A** | **LSV8A** |
| | | Silver | Non-plug-in | 0.5 in | | **LSC3K** | **LSD3K** | **LSV3K** |
| DPDT | 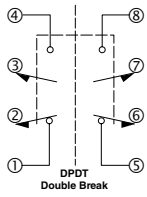 DPDT Double Break | Silver | Plug-in | 0.75 in | | **LSC2B** | **LSD2B** | **LSV2B** |
| | | Silver | Plug-in | 0.5 in | | **LSC2R** | **LSD2R** | **LSV2R** |
| | | Silver | Plug-in | 0.75 in | 120 V Ind. lite[1] | **LSC6B** | **LSD6B** | **LSV6B** |
| | | Silver | Non-plug-in | 0.75 in | | **LSC4L** | **LSD4L** | **LSV4L** |
| | | Silver | Non-plug-in | 0.5 in | | **LSC7L** | **LSD7L** | **LSV7L** |

[1] Use at voltage indicated for light. Wired to NO circuit. Upper temperature limit for lighted units is 93 °C [200 °F]
[2] Plug-in listings include base receptacle
[3] Completely fluorocarbon sealed switches are preferred for use in temperatures above 93 °C [200 °F]
[4] Gold-plated contacts

NOTE: Same polarity each pole.

To order a fluorocarbon sealed switch, insert the letters **Y** and **C** into the catalog listing as follows. The LSA1A limit switch is changed to a LS**Y**A**C**1A limit switch.
To order a low temperature, fluorosilicone sealed switch, insert the letters **Y** and **B** into the catalog listing as follows. The LSA1A limit switch is changed to a LS**Y**A**B**1A limit switch.

# MICRO SWITCH™ Heavy-Duty Limit Switches

**Figure 10. MICRO SWITCH™ HDLS LSC Series (single pole plunger dimensions**

**Figure 11. MICRO SWITCH™ HDLS LSC Series (double pole plunger dimensions**

### SPDT Plug-in (mm[in])

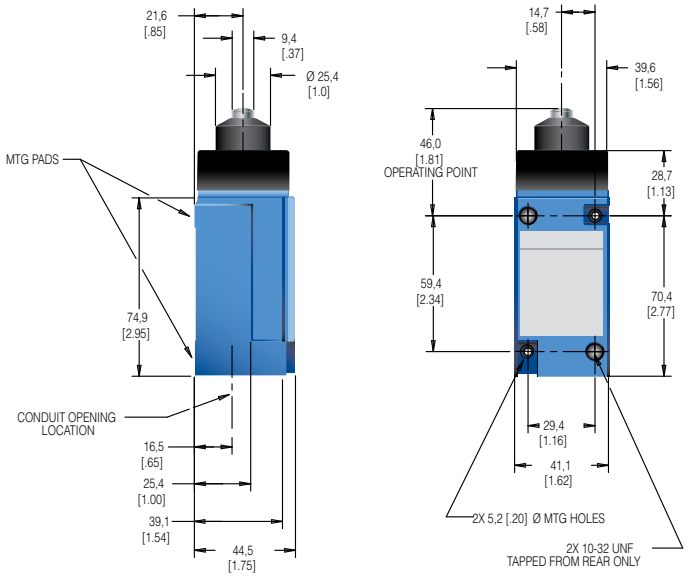


### DPDT Plug-in (mm[in])

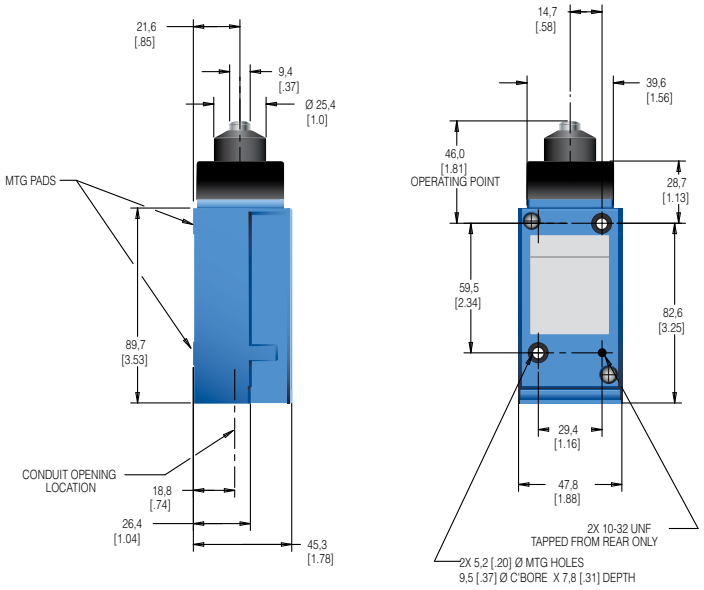


### SPDT Non-plug-in (mm[in])

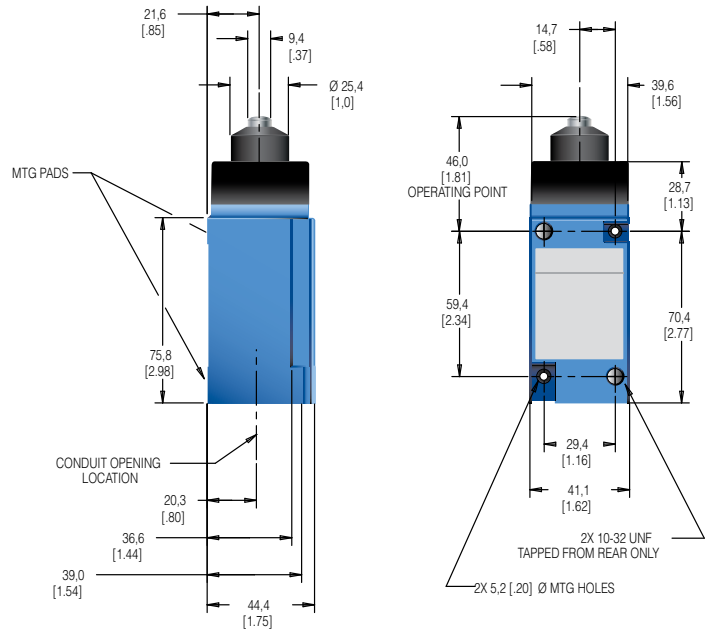


### DPDT Non-plug-in (mm[in])

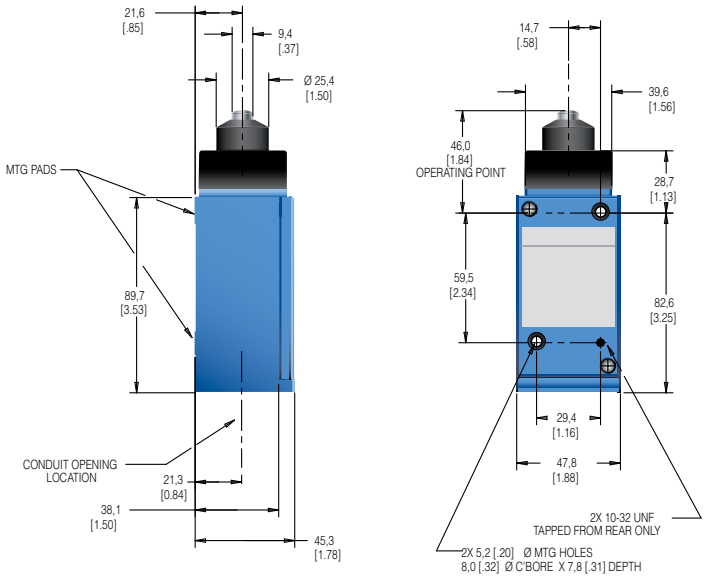

**Figure 12. MICRO SWITCH™ HDLS LSD Series (single pole) top roller plunger dimensions**

**Figure 13. MICRO SWITCH™ HDLS LSD Series (double pole) top roller plunger dimensions**

### SPDT Plug-in (mm[in])

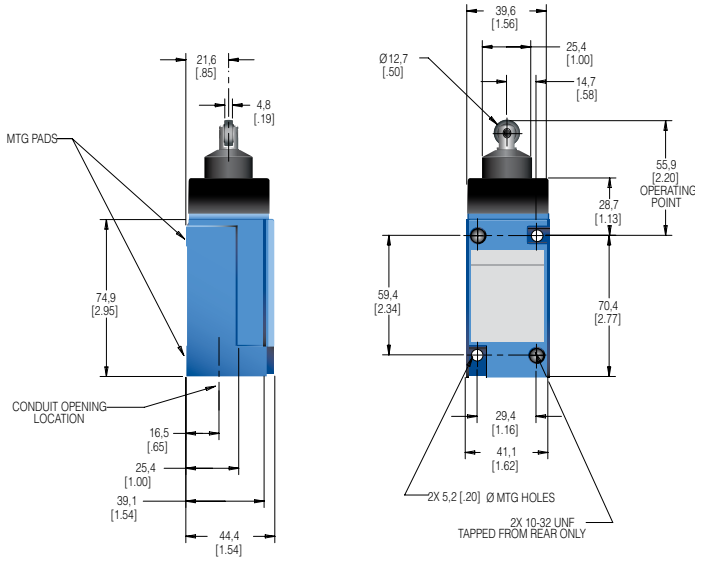


### DPDT Plug-in (mm[in])

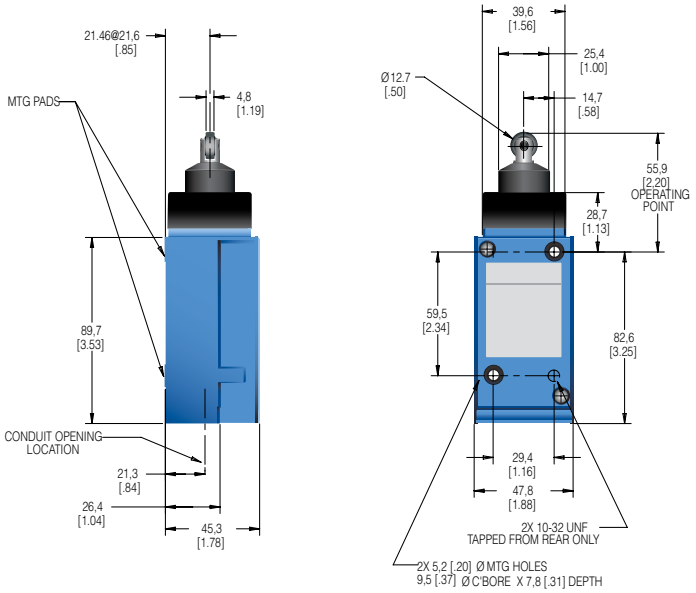


### SPDT Non-plug-in (mm[in])

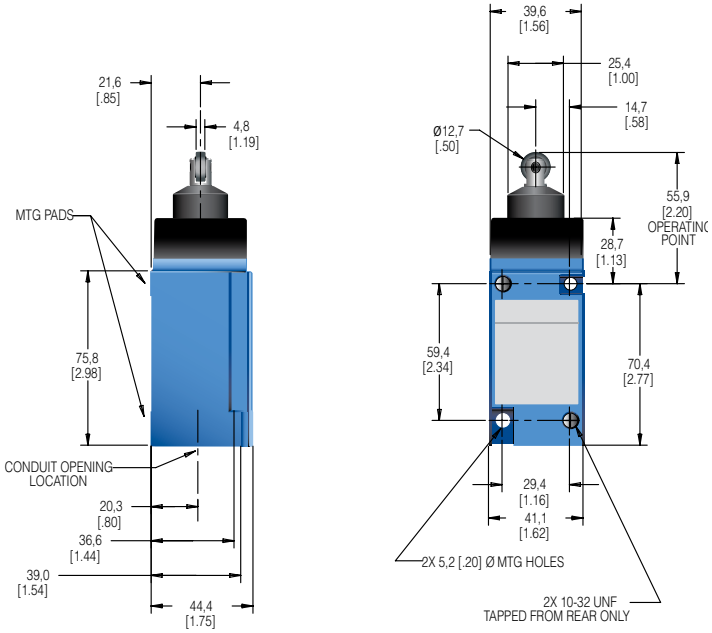


### DPDT Non-plug-in (mm[in])

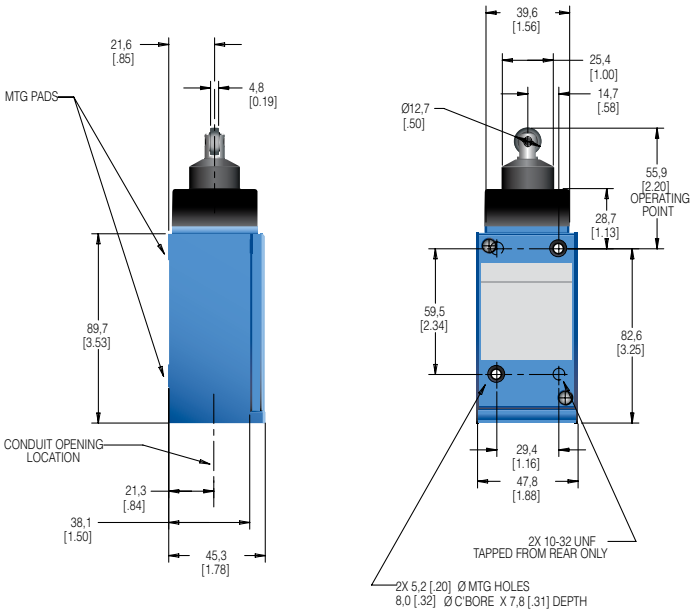

# MICRO SWITCH™ Heavy-Duty Limit Switches

**Figure 14. MICRO SWITCH™ HDLS LSV Series top adjustable plunger (single pole) dimensions**

**Figure 15. MICRO SWITCH™ HDLS LSV Series top adjustable plunger (double pole) dimensions**

### SPDT Plug-in (mm[in])

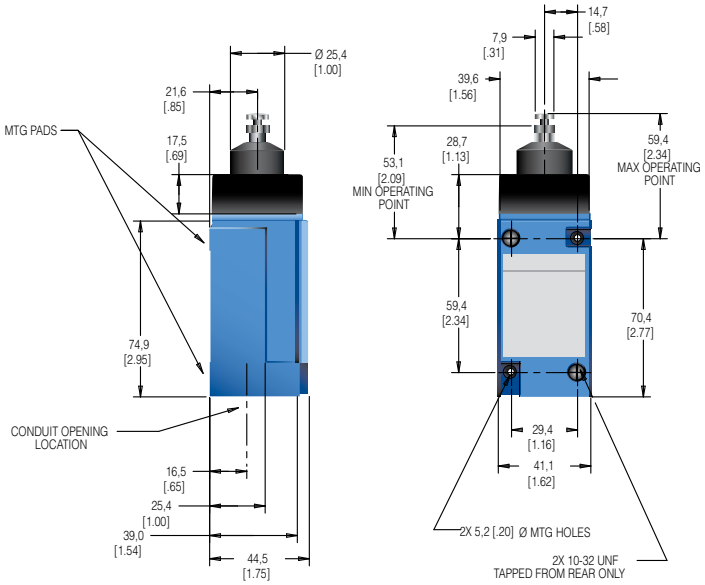


### DPDT Plug-in (mm[in])

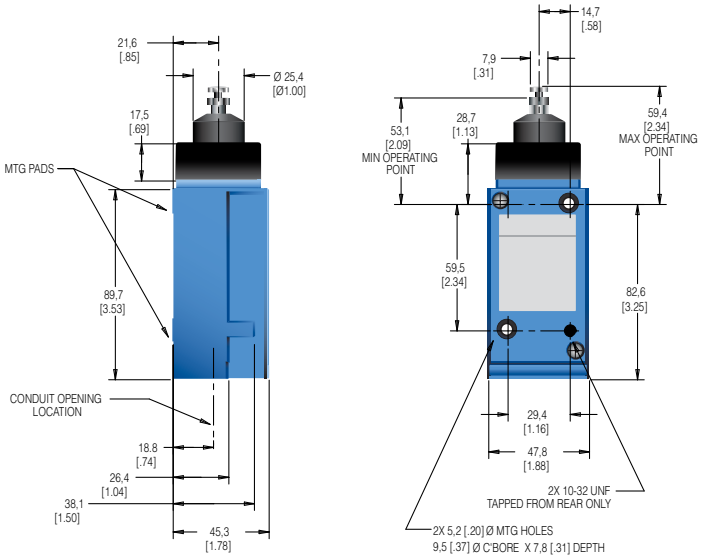


### SPDT Non-plug-in (mm[in])

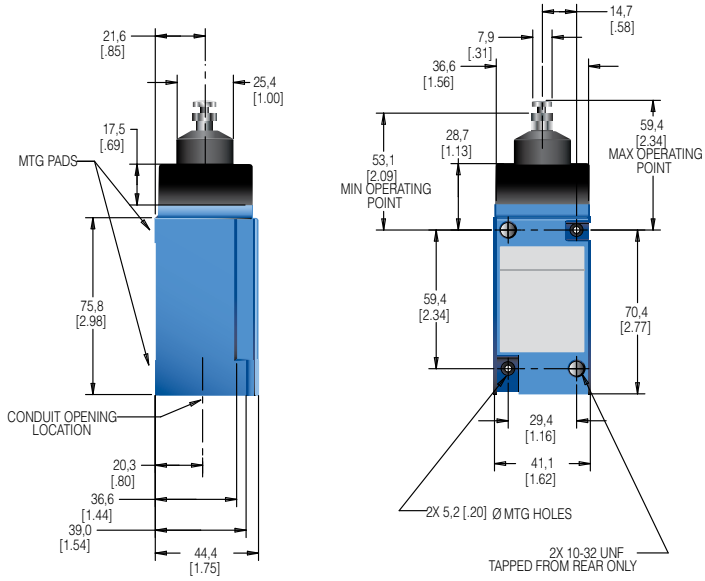


### DPDT Non-plug-in (mm[in])

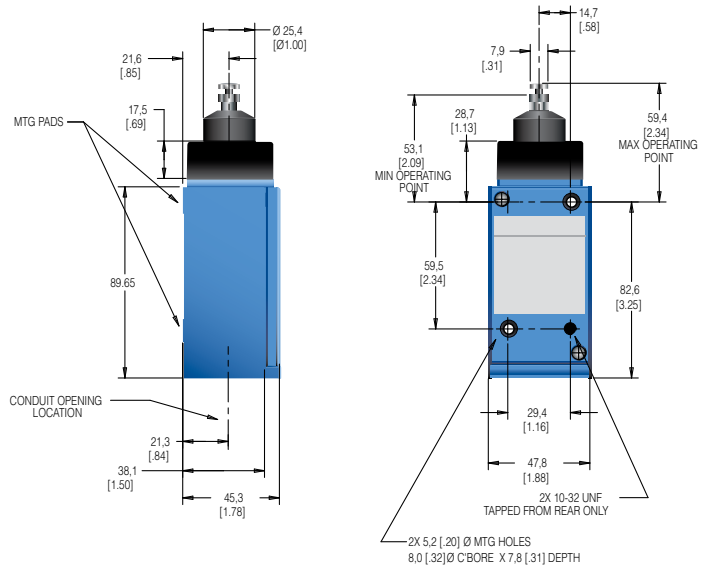


DIMS: MM
[IN]

## SIDE PLUNGERS • MICRO SWITCH™ HDLS SERIES ORDER GUIDE/RECOMMENDED LISTINGS

Heads may be positioned to accept actuation from any of four directions, 90° apart.

| | Plain (LSE) | Roller (LSF) | Adjustable (LSW) | Maintained (LSG) |
|---|---|---|---|---|
| | | | | |
| **Description** | Side plain plunger (momentary) | Side roller plunger (momentary) | Adjustable side plain plunger (momentary) | Side plain plunger with maintained contact |
| **Contact closed ■ Contact open □** | 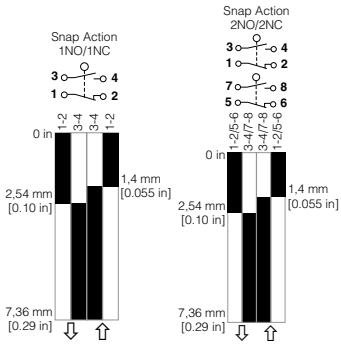  | | | 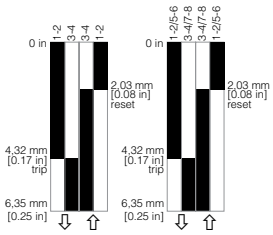  |
| **Pretravel** | 2,54 mm [0.10 in] | | | 4,32 mm [0.17 in] |
| **Different. travel** | Single pole: 0,64 mm [0.025 in]<br>Double pole: 0,89 mm [0.035 in] | | | 2,29 mm [0.09 in] |
| **Overtravel** | 4,83 mm [0.19 in] | | | 2,0 mm [0.08 in] |
| **Operating point (nominal)** | 33,0 mm [1.30 in] | 44,1 mm [1.74 in] | 41,0 mm to 47,4 mm [1.62 in to 1.87 in] | 67,6 mm [1.48 in] |
| **Operating force** | 26,7 N [6 lb] max. | | | 44,5 N [10 lb] max. |
| **Op. temp range[3]** | -12 °C to 93 °C [10 °F to 200°F]<br>(for low temp, high temp, or preleaded versions, see pags 11-12) | | | -1 °C to 93 °C [30 °F to 200°F]<br>(for low temp, high temp, or preleaded versions, see page 11-12) |

| Circuitry | | Contacts | Body Style[2] | Conduit (NPT) | Options | | | | |
|---|---|---|---|---|---|---|---|---|---|
| SPDT | 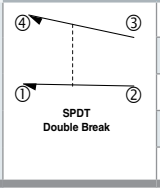  | Silver | Plug-in | 0.5 in | | **LSE1A** | **LSF1A** | **LSW1A** | **LSG1A** |
| | | Gold[4] | Plug-in | 0.5 in | | **LSE1E** | **LSF1E** | **LSW1E** | **LSG1E** |
| | | Silver | Plug-in | 0.5 in | 120 V Ind. lite[1] | **LSE5A** | **LSF5A** | **LSW5A** | **LSG5A** |
| | | Silver | Plug-in | 0.5 in | 240 V Ind. lite[1] | **LSE8A** | **LSF8A** | **LSW8A** | **LSG8A** |
| | | Silver | Non-plug-in | 0.5 in | | **LSE3K** | **LSF3K** | **LSW3K** | **LSG3K** |
| DPDT | 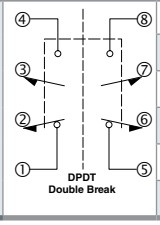  | Silver | Plug-in | 0.75 in | | **LSE2B** | **LSF2B** | **LSW2B** | **LSG2B** |
| | | Silver | Plug-in | 0.5 in | | **LSE2R** | **LSF2R** | **LSW2R** | **LSG2R** |
| | | Silver | Plug-in | 0.75 in | 120 V Ind. lite[1] | **LSE6B** | **LSF6B** | **LSW6B** | **LSG6B** |
| | | Gold[4] | Plug-in | 0.5 in | | **LSE6S** | **–** | **–** | **–** |
| | | Silver | Non-plug-in | 0.75 in | | **LSE4L** | **LSF4L** | **LSW4L** | **LSG4L** |
| | | Silver | Non-plug-in | 0.5 in | | **LSE7L** | **LSF7L** | **LSW7L** | **LSG7L** |

[1] Use at voltage indicated for light. Wired to NO circuit. Upper temperature limit for lighted units is 93 °C [200 °F]
[2] Plug-in listings include base receptacle
[3] Completely fluorocarbon sealed switches are preferred for use in temperatures above 93 °C [200 °F]
[4] Gold-plated contacts

NOTE: Same polarity each pole.

To order a fluorocarbon sealed switch, insert the letters **Y** and **C** into the catalog listing as follows. The LSA1A limit switch is changed to a LS**Y**A**C**1A limit switch.
To order a low temperature, fluorosilicone sealed switch, insert the letters **Y** and **B** into the catalog listing as follows. The LSA1A limit switch is changed to a LS**Y**A**B**1A limit switch.

# MICRO SWITCH™ Heavy-Duty Limit Switches

**Figure 16. MICRO SWITCH™ HDLS LSE Series side plain plunger (single pole) dimensions**

**Figure 17. MICRO SWITCH™ HDLS LSE Series side plain plunger (double pole) dimensions**

**SPDT Plug-in (mm[in])**

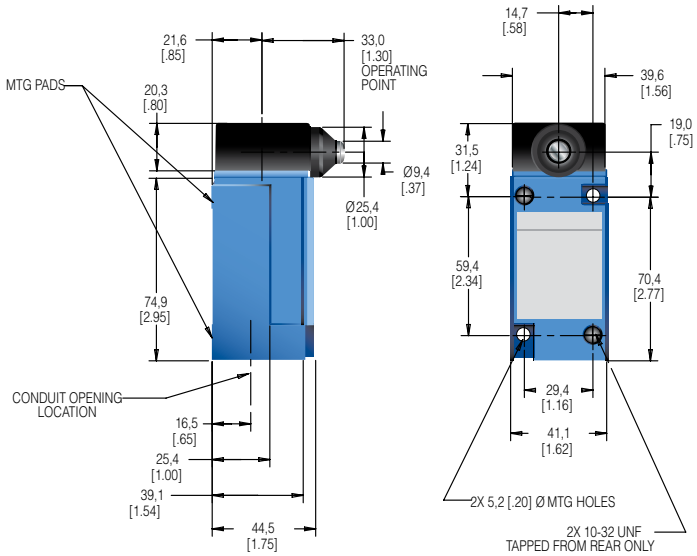


**DPDT Plug-in (mm[in])**

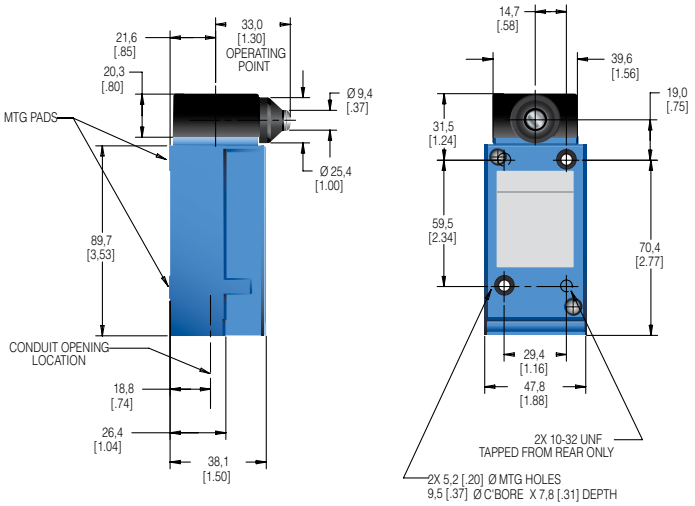


**SPDT Non-plug-in (mm[in])**

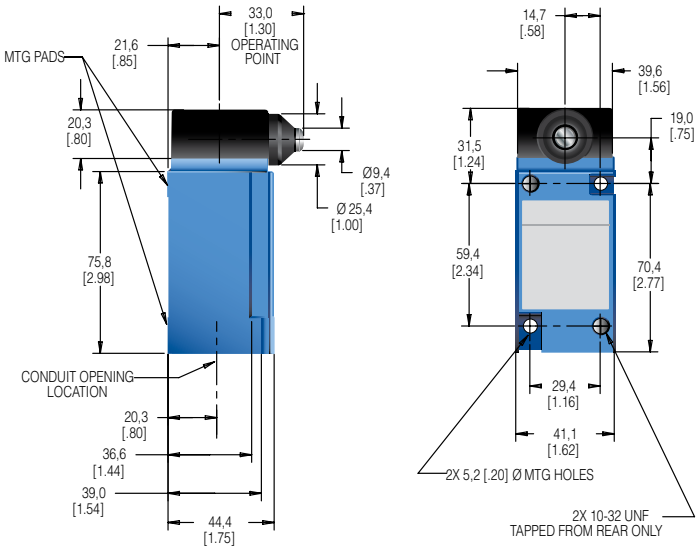


**DPDT Non-plug-in (mm[in])**

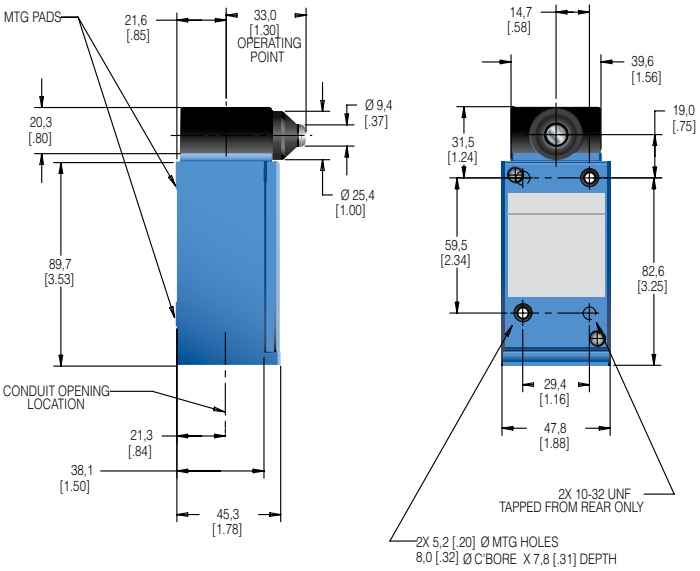

**Figure 18. MICRO SWITCH™ HDLS LSF Series side roller plunger (single pole) dimensions**

**Figure 19. MICRO SWITCH™ HDLS LSF Series side roller plunger (double pole) dimensions**

### SPDT Plug-in (mm[in])

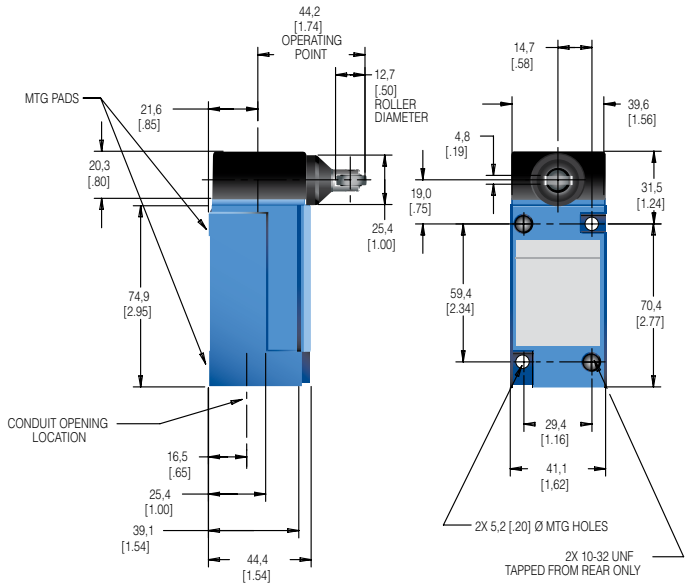


### DPDT Plug-in (mm[in])

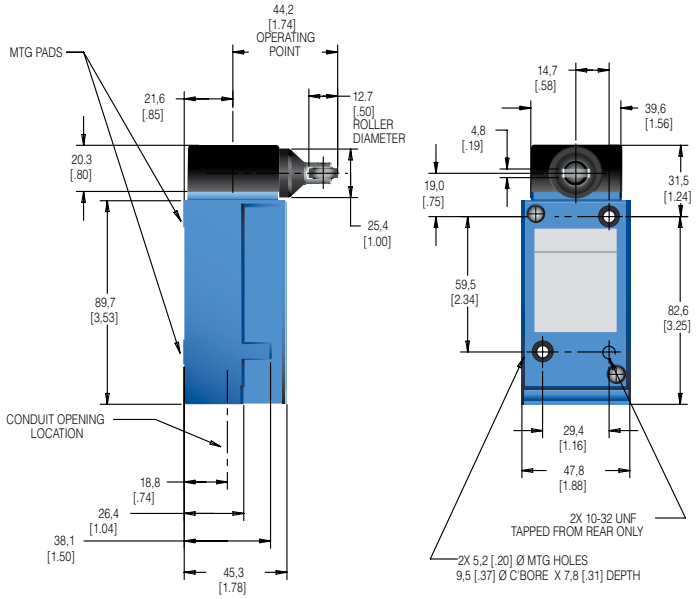


### SPDT Non-plug-in (mm[in])

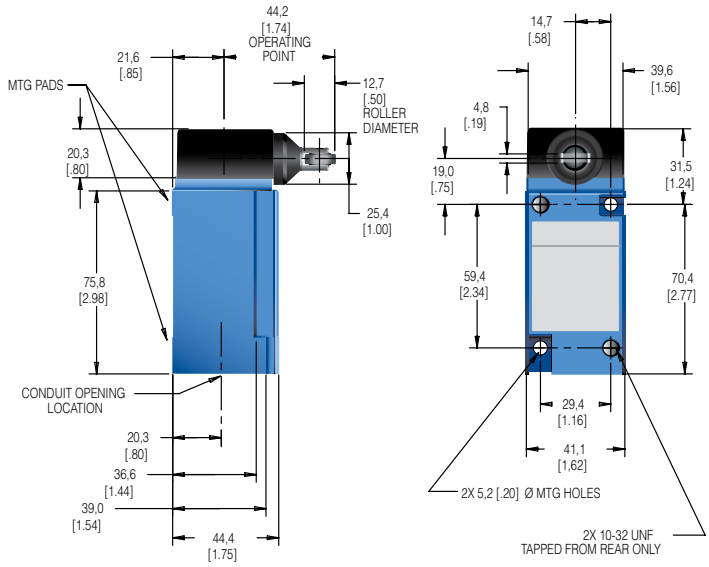


### DPDT Non-plug-in (mm[in])

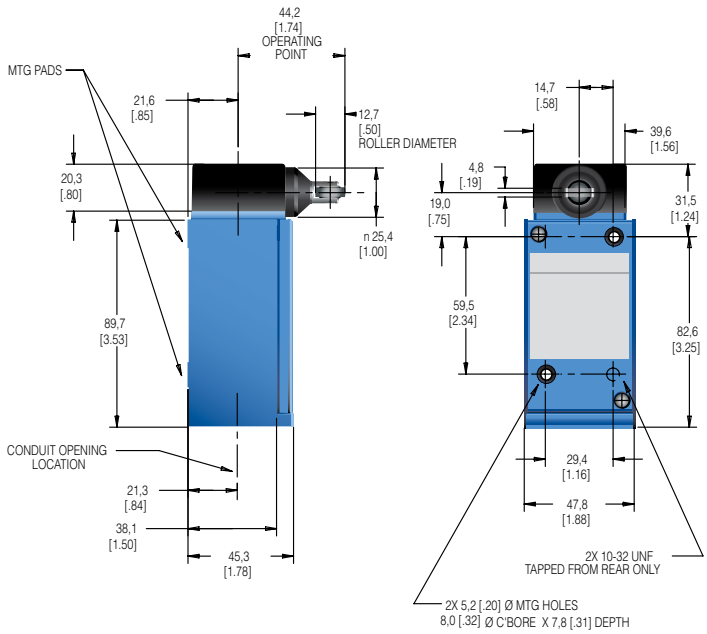

# MICRO SWITCH™ Heavy-Duty Limit Switches

**Figure 20. MICRO SWITCH™ HDLS LSW Series side adjustable plunger (single pole) dimensions**

**Figure 21. MICRO SWITCH™ HDLS LSW Series side adjustable plunger (double pole) dimensions**

### SPDT Plug-in (mm[in])

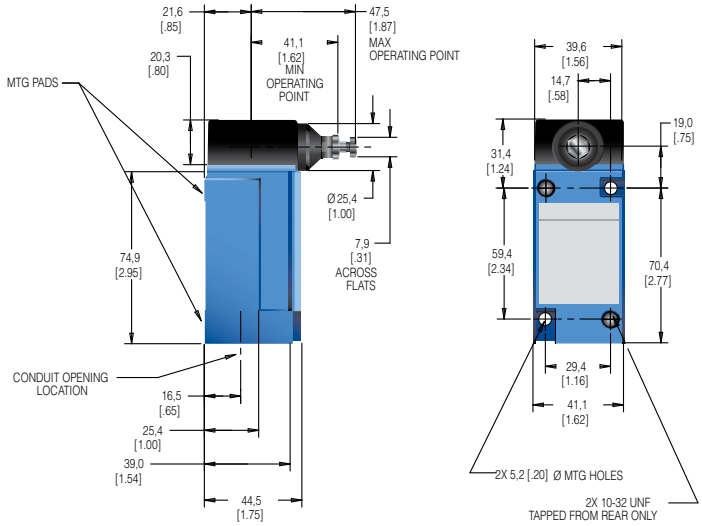


### DPDT Plug-in (mm[in])

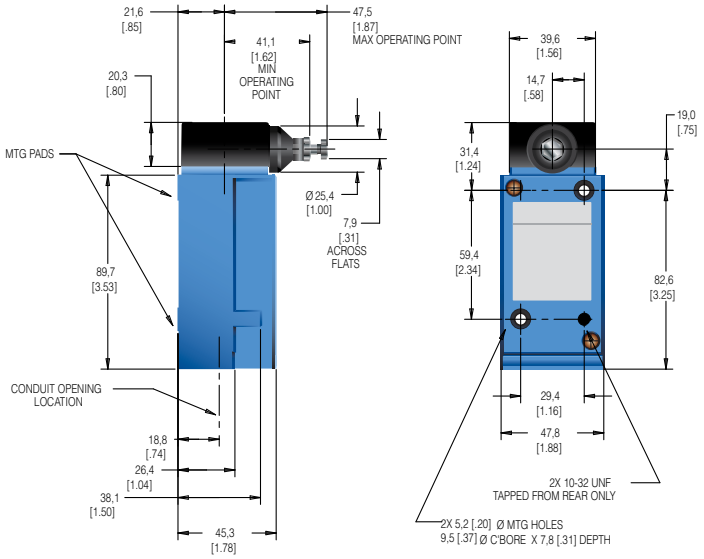


### SPDT Non-plug-in (mm[in])

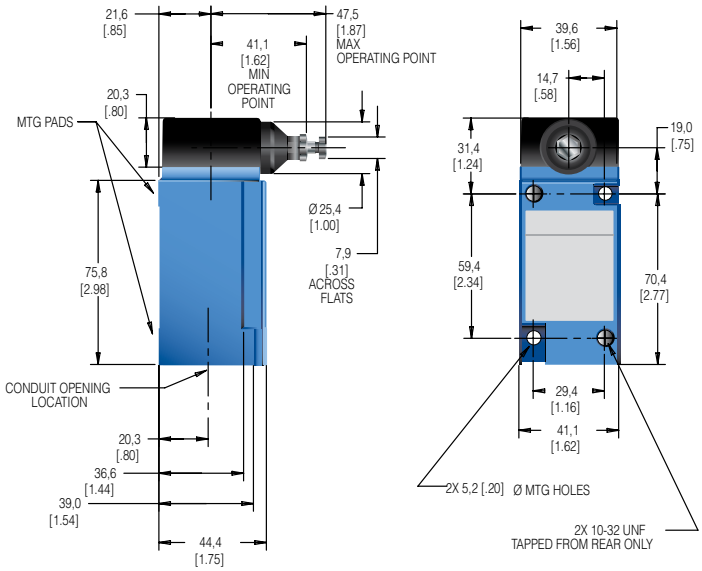


### DPDT Non-plug-in (mm[in])

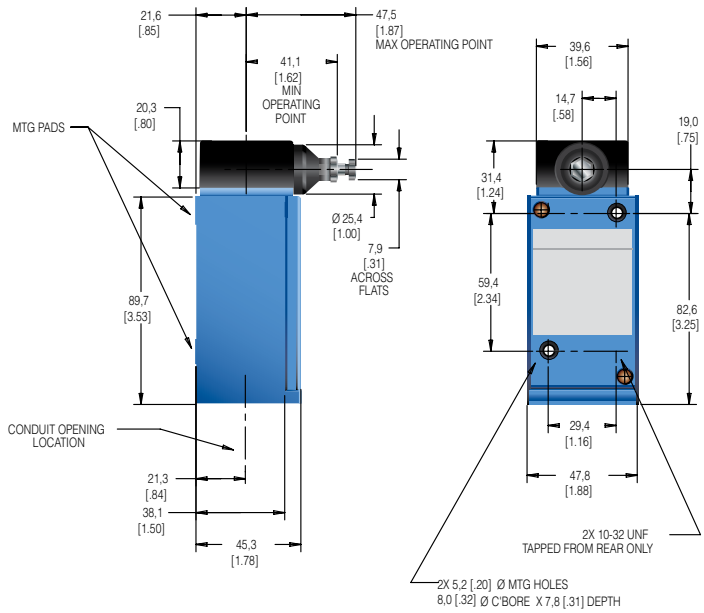

**Figure 22. MICRO SWITCH™ HDLS LSG Series maintained contact side plunger (single pole) dimensions**

**Figure 23. MICRO SWITCH™ HDLS LSG Series maintained contact side plunger (double pole) dimensions**

### SPDT Plug-in (mm[in])

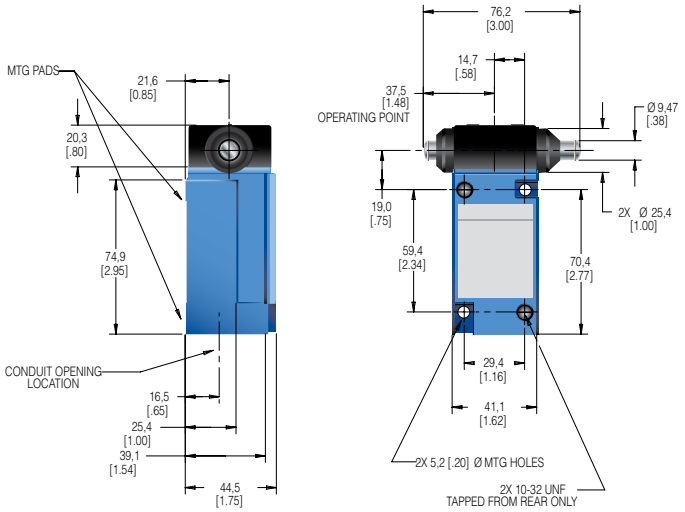


### DPDT Plug-in (mm[in])

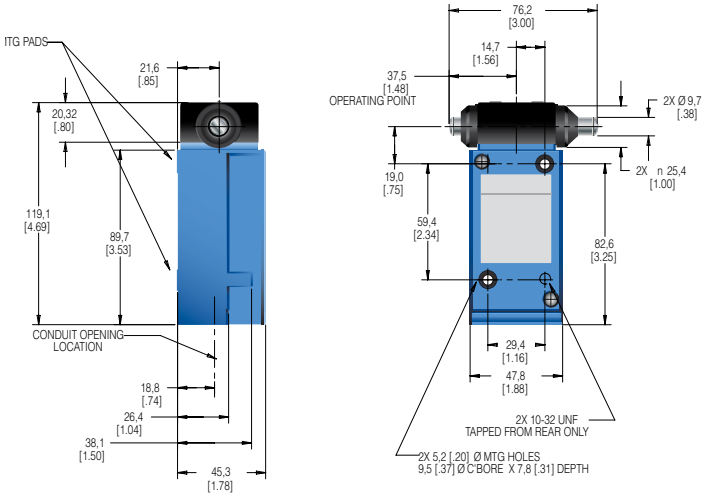


### SPDT Non-plug-in (mm[in])

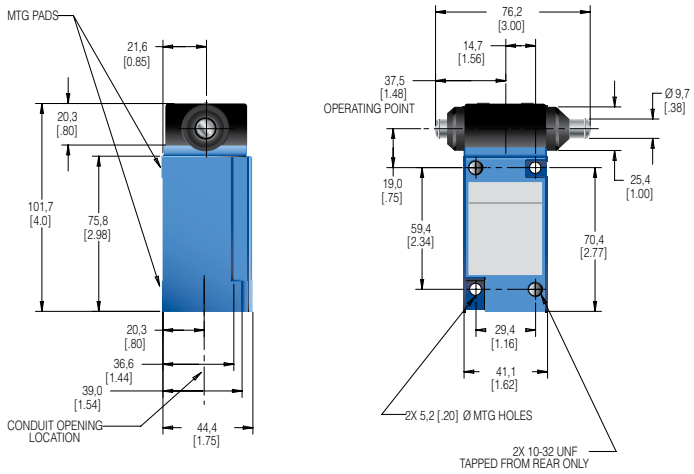


### DPDT Non-plug-in (mm[in])

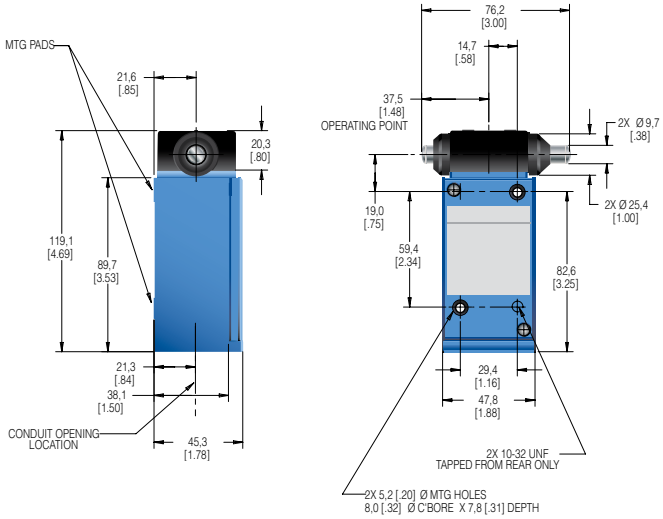

# MICRO SWITCH™ Heavy-Duty Limit Switches

## WOBBLES • MICRO SWITCH™ HDLS SERIES ORDER GUIDE/RECOMMENDED LISTINGS

LSJ1A-7A - Plastic rod | LSJ1A-7M - Spring wire | LSJ1A-7N - Flexible actuator | LSK1A-8A - Cat whisker | LSK1A-8C - Coil spring

| | LSJ Series 7A Actuator | LSJ Series 7N Actuator | LSJ Series 7M Actuator | LSK Series 8A-8C Actuator | |
|---|---|---|---|---|---|
| **Description** | Plastic rod lever (wobble stick) | Flexible cable lever | Spring wire lever - may be formed for special needs | Cat whisker actuator for low operating force applications | |
| **Contact closed ■ Contact open □** | 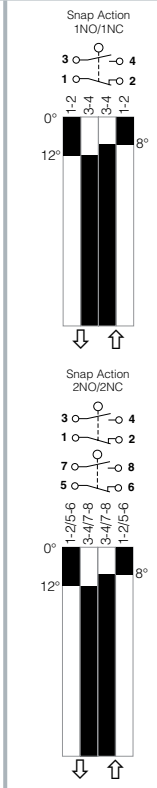 | 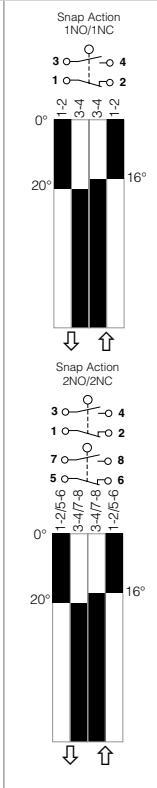 | 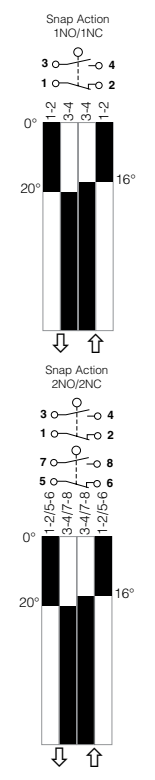 | -8A** 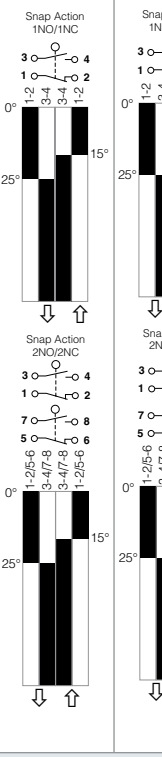 | -8C 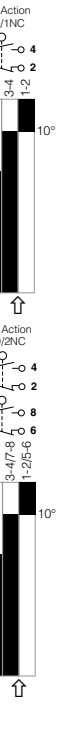 |
| **Lever length from top mounting hole** | Actuator: 140 mm [5.5 in] | Actuator: 140 mm [5.5 in] | Actuator: 330 mm [13 in] | 8A act.: 140 mm [5.5 in] SST<br>8C act.: 140 mm [5.5 in] steel plated | |
| **Pretravel** | 25,4 mm [1.0 in] | 38,0 mm [1.5 in] | 102 mm [4.0 in] | 51,0 mm [2.0 in] | |
| **Oper. force** | 2,78 Nm [10 oz] | 1,95 Nm [7 oz] | 1,39 Nm [5 oz] | 8A: 1,39 Nm [5 oz];<br>8C: 1,95 Nm [7 oz] | |
| **Op. temp range[3]** | -12 °C to 93 °C [10°F to 200 °F] (for low temp, high temp, or preleaded versions, see pages 11-12) | | | | |

| Circuitry | | Contacts | Body Style[2] | Conduit (NPT) | Options | | | | | |
|---|---|---|---|---|---|---|---|---|---|---|
| SPDT | 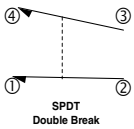 SPDT Double Break | Silver | Plug-in | 0.5 in | | **LSJ1A-7A** | **LSJ1A-7N** | **LSJ1A-7M** | **LSK1A-8A** | **LSK1A-8C** |
| | | Gold[4] | Plug-in | 0.5 in | | **LSJ1E-7A** | **–** | **LSJ1E-7M** | **LSK1E-8A** | **LSK1E-8C** |
| | | Silver | Plug-in | 0.5 in | 120 V Ind. lite[1] | **LSJ5A-7A** | **LSJ5A-7N** | **LSJ5A-7M** | **LSK5A-8A** | **LSK5A-8C** |
| | | Silver | Plug-in | 0.5 in | 240 V Ind. lite[1] | **LSJ8A-7A** | **LSJ8A-7N** | **LSJ8A-7M** | **LSK8A-8A** | **LSK8A-8C** |
| | | Silver | Non-plug-in | 0.5 in | | **LSJ3K-7A** | **LSJ3K-7N** | **LSJ3K-7M** | **LSK3K-8A** | **LSK3K-8C** |
| DPDT | 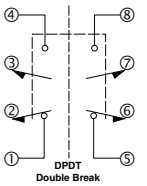 DPDT Double Break | Silver | Plug-in | 0.75 in | | **LSJ2B-7A** | **LSJ2B-7N** | **LSJ2B-7M** | **LSK2B-8A** | **LSK2B-8C** |
| | | Silver | Plug-in | 0.5 in | | **LSJ6B-7A** | **LSJ6B-7N** | **LSJ6B-7M** | **LSK6B-8A** | **LSK6B-8C** |
| | | Silver | Plug-in | 0.75 in | 120 V Ind. lite[1] | **LSJ2R-7A** | **LSJ2R-7N** | **LSJ2R-7M** | **LSK2R-8A** | **LSK2R-8C** |
| | | Silver | Non-plug-in | 0.75 in | | **LSJ4L-7A** | **LSJ4L-7N** | **LSJ4L-7M** | **LSK4L-8A** | **LSK4L-8C** |
| | | Silver | Non-plug-in | 0.5 in | | **LSJ7L-7A** | **LSJ7L-7N** | **LSJ7L-7M** | **LSK7L-8A** | **LSK7L-8C** |

[1] Use at voltage indicated for light. Wired to NO circuit. Upper temperature limit for lighted units is 93°C [200 °F]
[2] Plug-in listings include base receptacle
[3] Completely fluorocarbon sealed switches are preferred for use in temperatures above 93 °C [200 °F]
[4] Gold-plated contacts
** These cat whiskers have a 140 mm [5.5 in] long actuator. To specify a 190 mm [7.5 in] length actuator, substitute -**8B** for -**8A**.

NOTE: Same polarity each pole.

To order a fluorocarbon sealed switch, insert the letters **Y** and **C** into the catalog listing as follows. The LSA1A limit switch is changed to a LS**Y**A**C**1A limit switch.
To order a low temperature, fluorosilicone sealed switch, insert the letters **Y** and **B** into the catalog listing as follows. The LSA1A limit switch is changed to a LS**Y**A**B**1A limit switch.

**Figure 24. MICRO SWITCH™ HDLS LSJ_ _-7A Series wobble (single pole) dimensions**

**SPDT Plug-in (mm[in])**

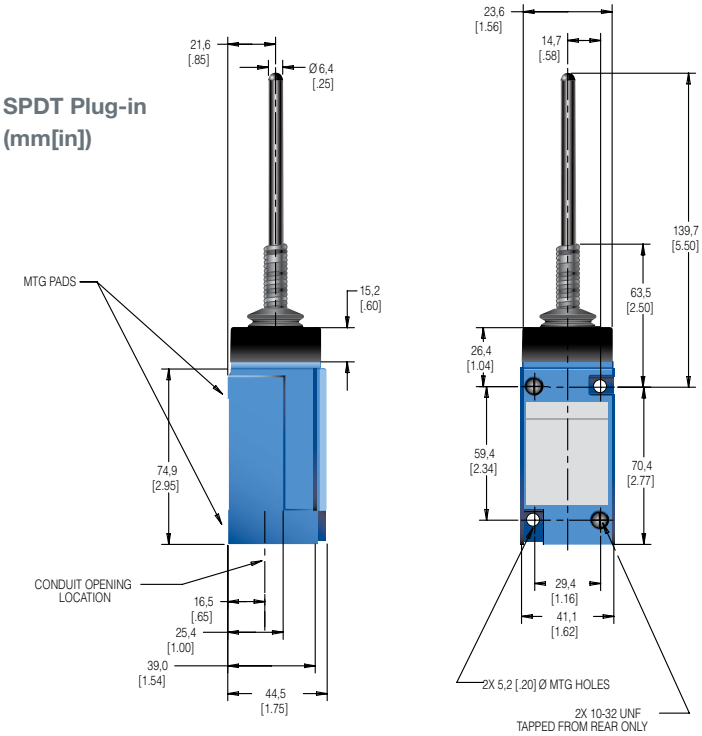


**SPDT Non-plug-in (mm[in])**

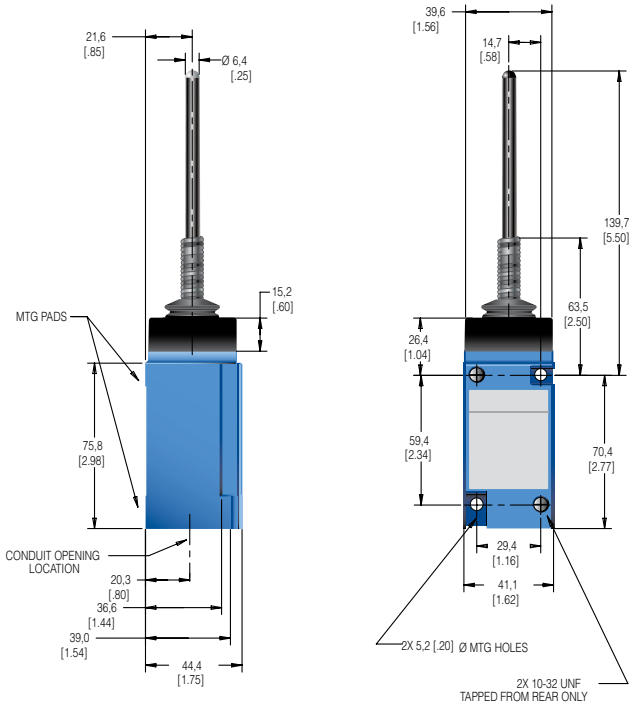


**Figure 25. MICRO SWITCH™ HDLS LSJ_ _-7A Series wobble (double pole) dimensions**

**DPDT Plug-in (mm[in])**

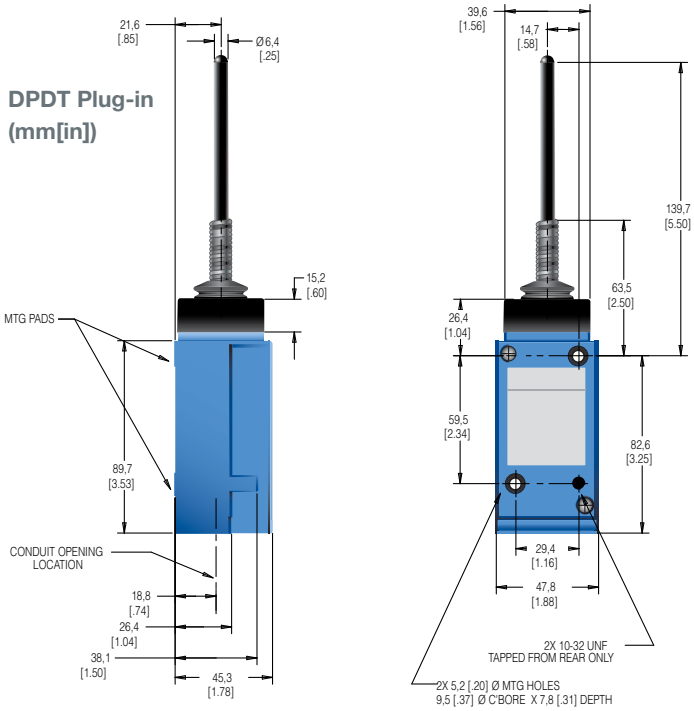


**DPDT Non-plug-in (mm[in])**

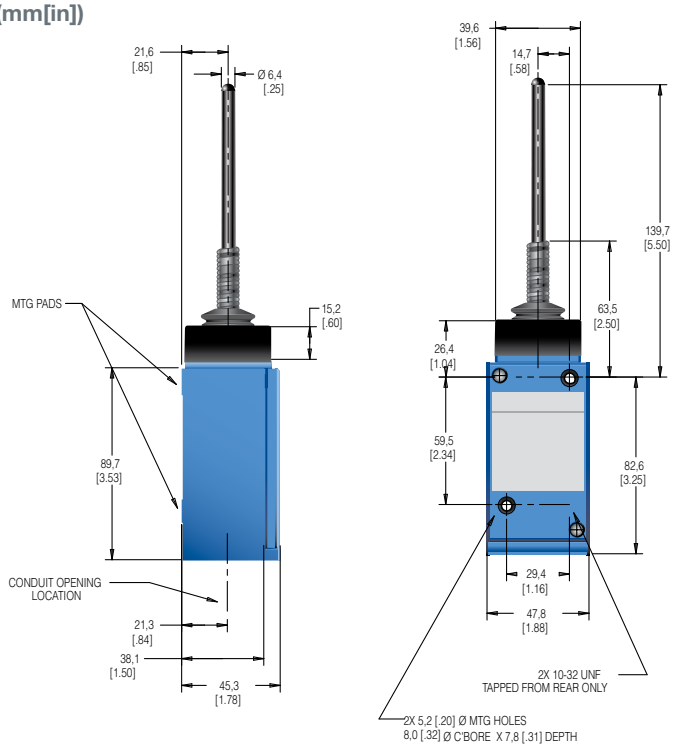

# MICRO SWITCH™ Heavy-Duty Limit Switches

**Figure 26. MICRO SWITCH™ HDLS LSJ_ _-7N Series wobble (single pole) dimensions**

**SPDT Plug-in (mm[in])**

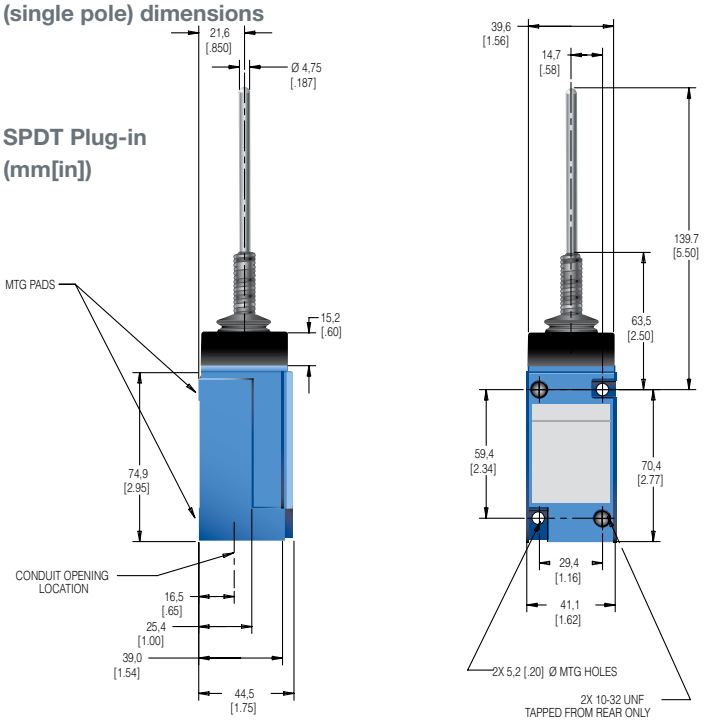


**Figure 27. MICRO SWITCH™ HDLS LSJ_ _-7N Series wobble (double pole) dimensions**

**DPDT Plug-in (mm[in])**

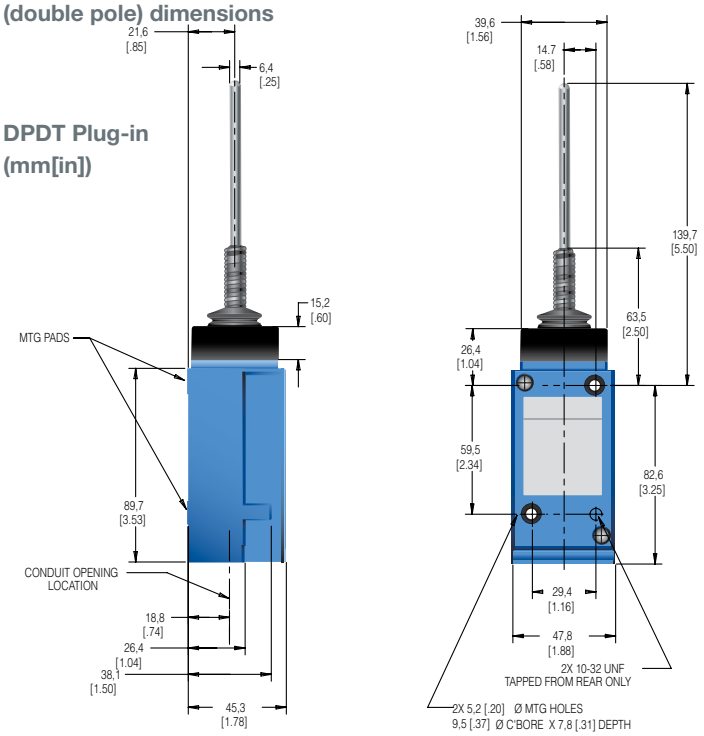


**SPDT Non-plug-in (mm[in])**

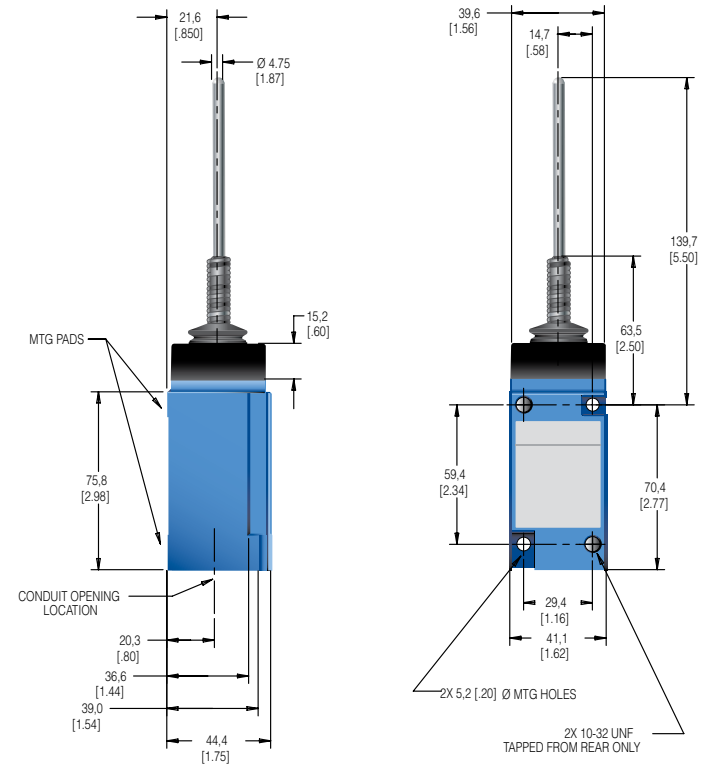


**DPDT Non-plug-in (mm[in])**

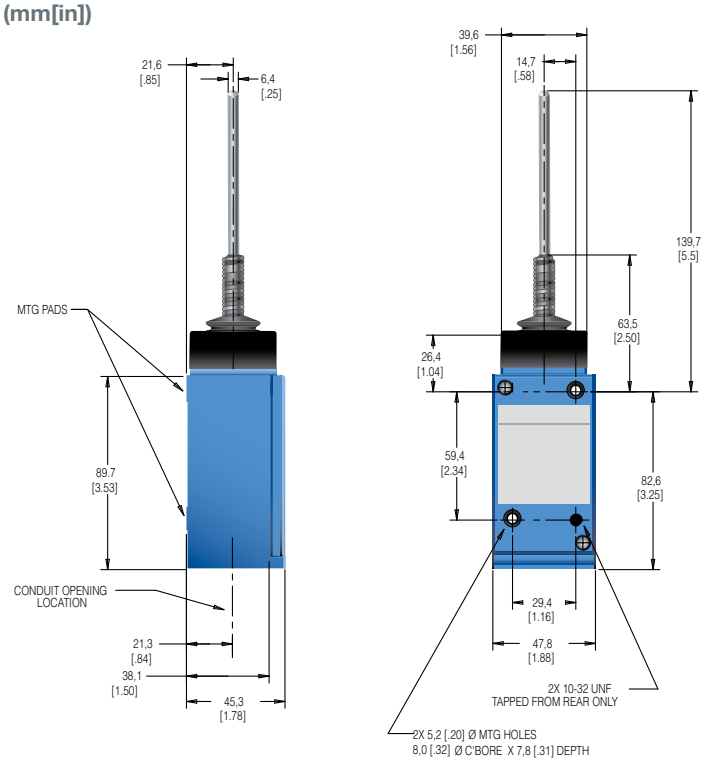

**Figure 28. MICRO SWITCH™ HDLS LSJ_ _-7M Series wobble (single pole) dimensions**

**SPDT Plug-in (mm[in])**

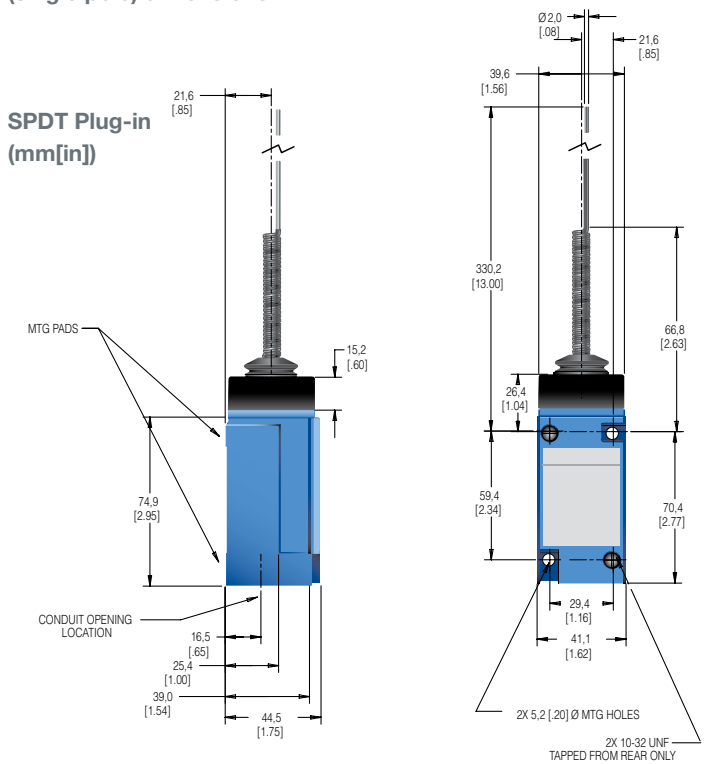


**Figure 29. MICRO SWITCH™ HDLS LSJ_ _-7M Series wobble (double pole) dimensions**

**DPDT Plug-in (mm[in])**

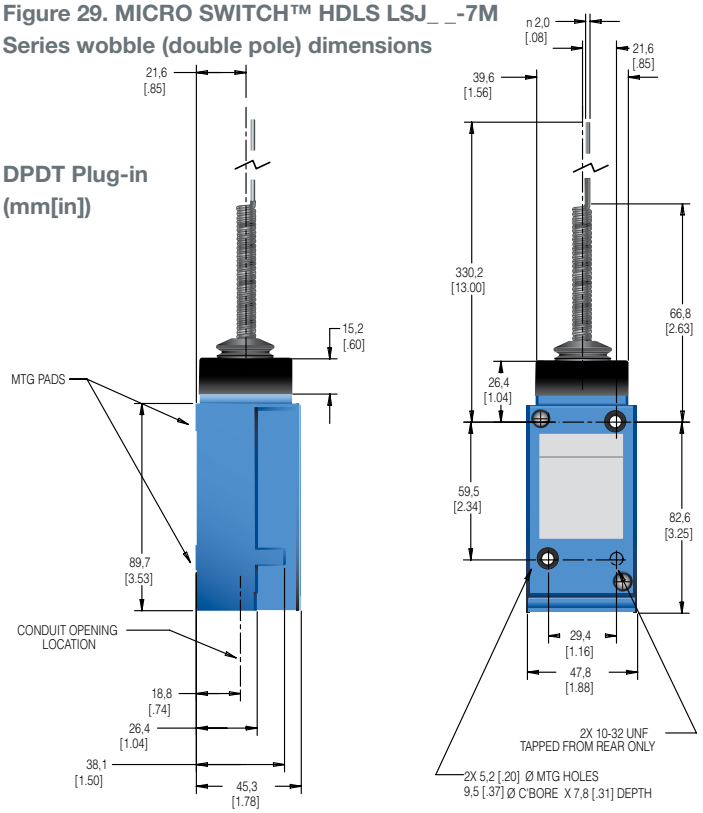


**SPDT Non-plug-in (mm[in])**

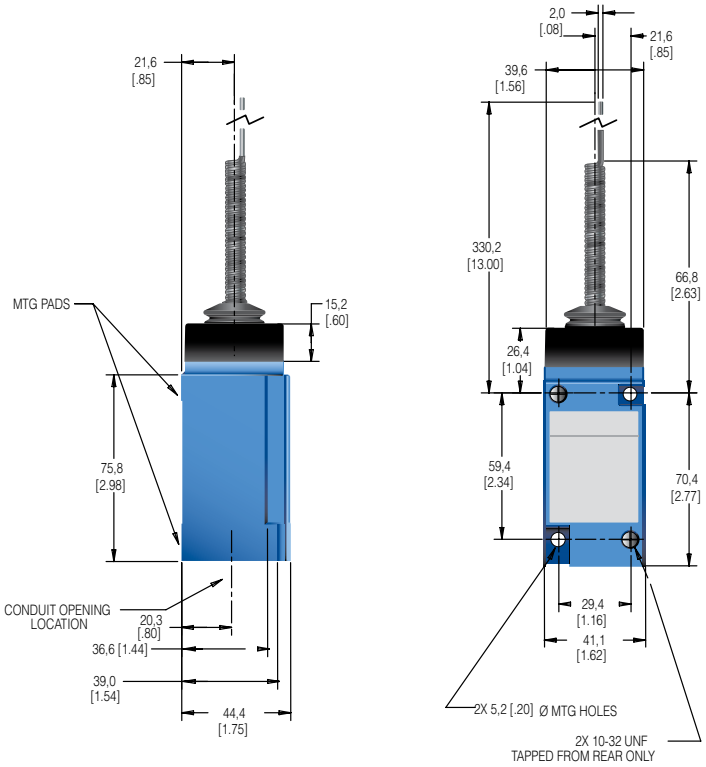


**DPDT Non-plug-in (mm[in])**

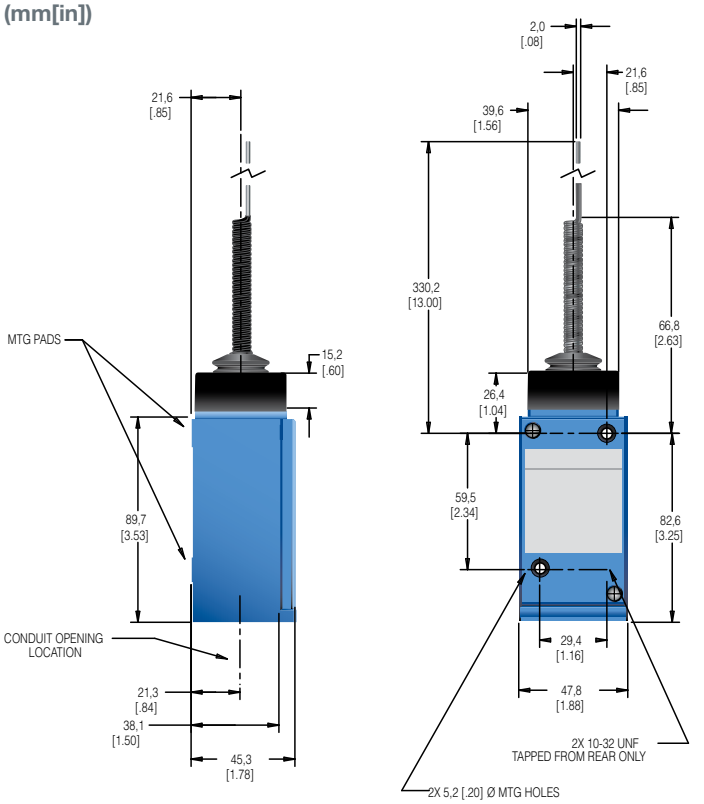

**Figure 30. MICRO SWITCH™ HDLS LSK_ _-8A Series wobble (single pole) dimensions**

**SPDT Plug-in (mm[in])**

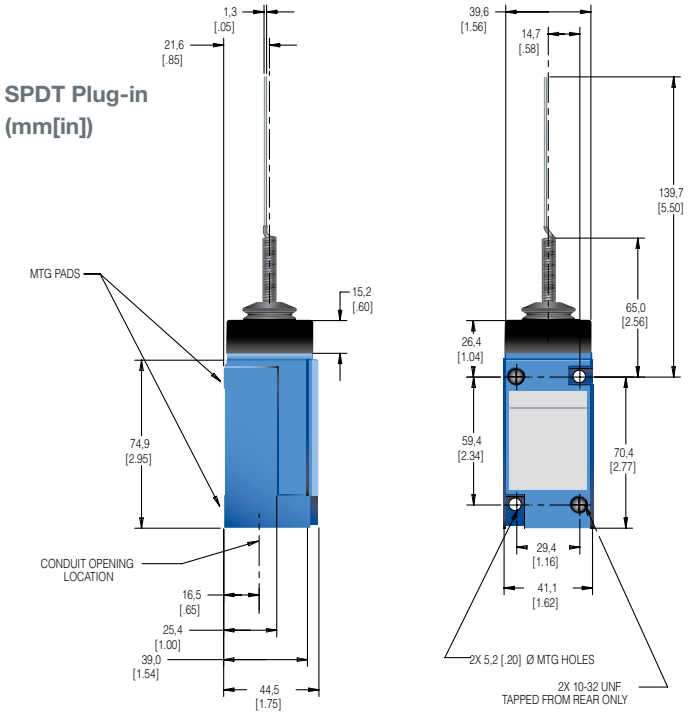


**SPDT Non-plug-in (mm[in])**

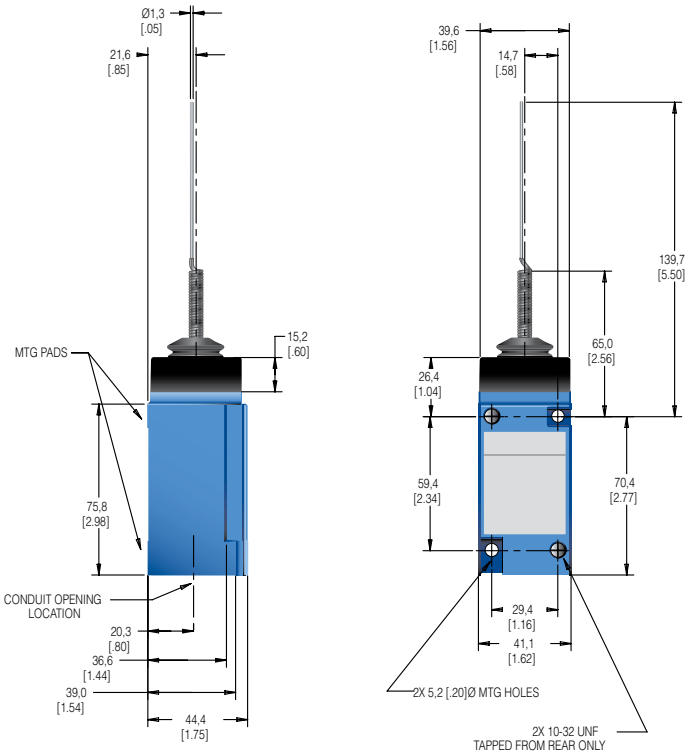


**Figure 31. MICRO SWITCH™ HDLS LSK_ _-8A Series wobble (double pole) dimensions**

**DPDT Plug-in (mm[in])**

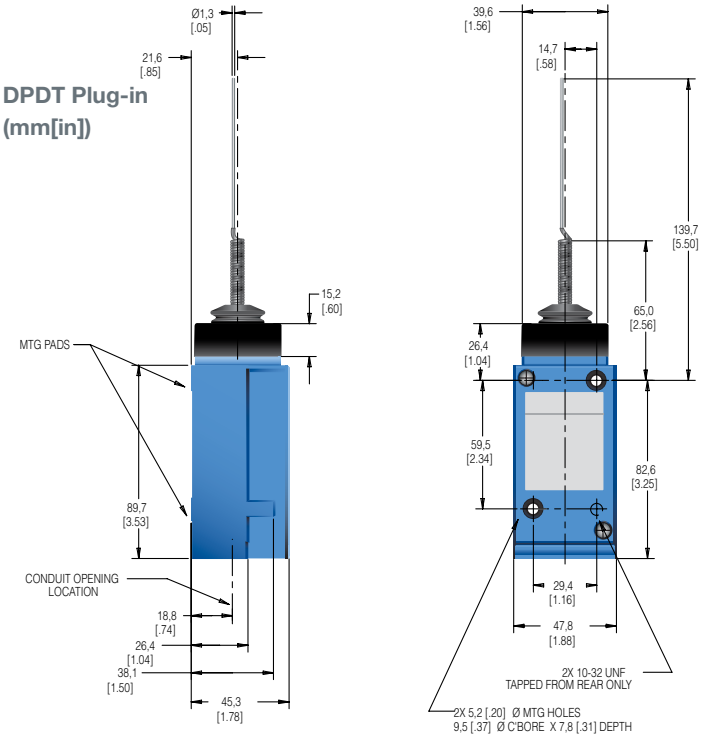


**DPDT Non-plug-in (mm[in])**

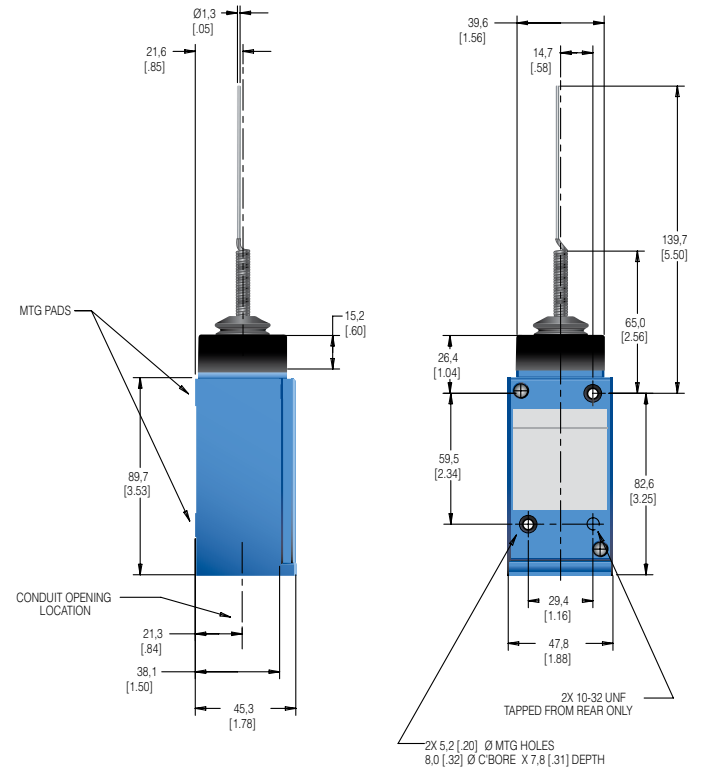

**Figure 32. MICRO SWITCH™ HDLS LSK_ _-8C Series wobble (single pole) dimensions**

**SPDT Plug-in (mm[in])**

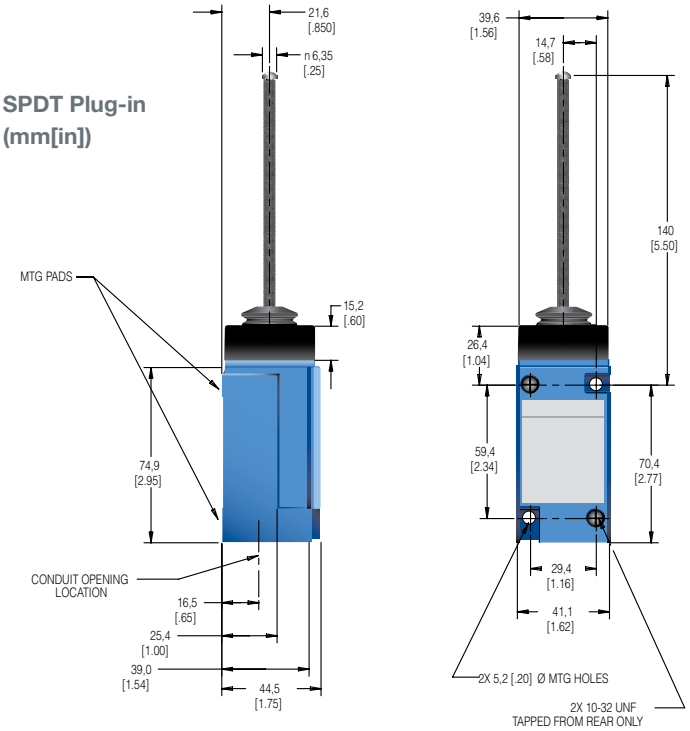


**SPDT Non-plug-in (mm[in])**

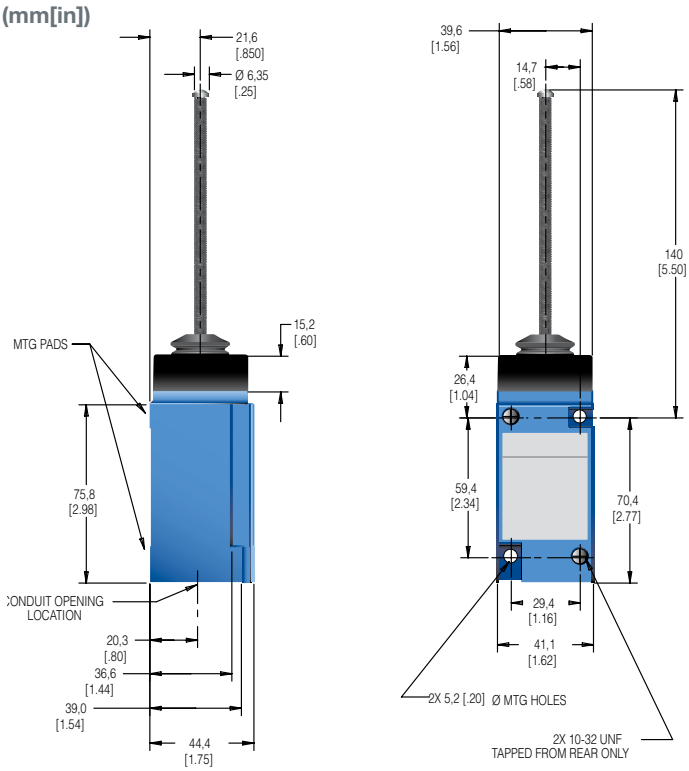


**Figure 33. MICRO SWITCH™ HDLS LSK_ _-8C Series wobble (double pole) dimensions**

**DPDT Plug-in (mm[in])**

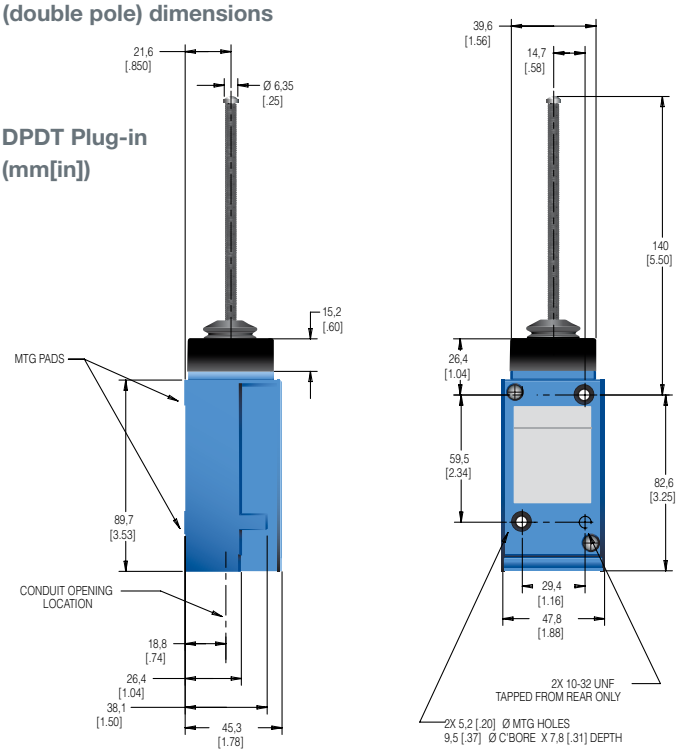


**DPDT Non-plug-in (mm[in])**

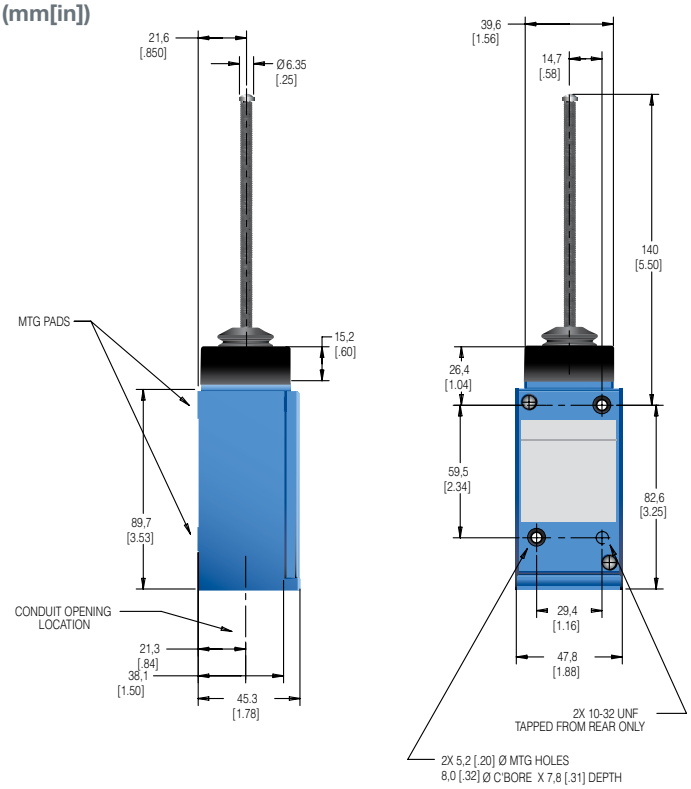

# MICRO SWITCH™ Heavy-Duty Limit Switches

## SPECIAL APPLICATIONS

## HIGH CAPACITY LIMIT SWITCH

### Features

- High dc current ratings
- 20 A rating at 120 Vac (single pole)
- Plug-in or non-plug in
- Positive retention lever arm
- High resistance to seismic shock

This series has a wide gap contact block that handles a higher make/break dc load. In addition, a special lever arm has a serrated shaft hole and a cap screw with locking nut for attaching the lever to the rotary shaft. This assures a firm grip on the operating shaft and positive retention of the lever adjustment.

The need for precise operation, coupled with challenging environmental conditions places rigid demands on any control. Honeywell's products are intended to satisfy these demands with its high capacity HDLS, designed to perform reliably under these conditions.

### Listings

| | |
|---|---|
| **LSQ051** | Double pole, non-plug-in, 0.75 in conduit |
| **LSQ052** | Double pole, plug-in, 0.75 in conduit |

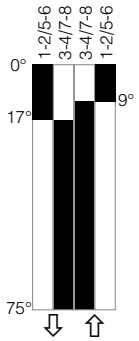


| | |
|---|---|
| **LSQ053** | Single pole, non-plug-in, 0.5 in conduit |
| **LSQ054** | Single pole, plug-in, 0.5 in conduit |

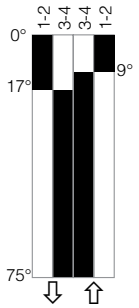


| | |
|---|---|
| **LSZ616** | Replacement lever for above listings |
| **Pretravel** | 17° max. |
| **Diff. travel** | 8° max. |
| **Overtravel** | 58° min. |
| **Oper. torque** | 0,45 Nm [4 in-lb] max. |
| **Action** | CW and CCW (spring return) |

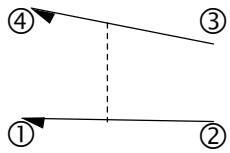


**SPDT**
**Double Break**

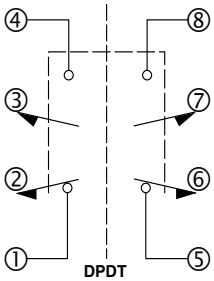


**DPDT**
**Double Break**

| | Single Pole | | Double Pole | |
|---|---|---|---|---|
| **Voltage** | **Resistive Load** | **Inductive Load** | **Resistive Load** | **Inductive Load** |
| 125 Vdc | 2.0 A | 1.0 A | 1.0 A | 0.4 A |
| 250 Vdc | 0.7 A | 0.4 A | 0.4 A | 0.2 A |
| 120 Vac | 20 A | 20 A | 10 A | 10 A |
| 240 Vac | 15 A | 15 A | 7.5 A | 7.5 A |
| 480 Vac | 10 A | 10 A | 5 A | 5 A |
| 600 Vac | 5 A | 5 A | 2.5 A | 2.5 A |

Maximum operating rate - 15 operations per minute.

NOTE: Same polarity each pole.

## SPECIAL APPLICATIONS

### GRAVITY RETURN SIDE ROTARY SWITCHES (LSS)

LSS1H gravity-return, side-rotary switches have no return spring mechanism. The weight of the actuating lever must provide the force to restore it to the free position. The 5 in-oz. max. operating torque is useful in conveyor applications since it enables operation by small or lightweight objects. Because the head is unsealed, the **LSS1H** is classified as NEMA 1. However, the switch cavity is sealed to protect the switch contacts.

| | LSS1H |
|---|---|
| **Description** | Gravity-return side rotary |
| **Circuitry** | SPDT, double break |
| **Contacts** | Silver |
| **Sealing** | NEMA 1 |
| **Electrical rating** | (B) NEMA B600 |
| **Body style** | Plug-in |
| **Conduit (NPT)** | 0.5 in |
| **Differential travel** | 12° max. |
| **Total travel (no stop)*** | 360° |
| **Operating torque** | 0,035 Nm [5 in-oz] max. |

* Switch has approximately 180° dwell of the normally closed and normally open switch contacts.

NOTE: Same polarity each pole.

### EXTRA LOW TORQUE SIDE ROTARY SWITCHES (LST)

LST1H extra-low torque, side-rotary switches have a low force return spring and a maximim operation torque of 12 in-oz. It is rated as NEMA 1 due to an unsealed head. The switch cavity is sealed to protect the switch contacts.

| | LST1H |
|---|---|
| **Description** | Extra-low torque side rotary |
| **Circuitry** | SPDT, double break |
| **Contacts** | Silver |
| **Sealing** | NEMA 1 |
| **Electrical rating** | (B) NEMA B600 |
| **Body style** | Plug-in |
| **Conduit (NPT)** | 0.5 in |
| **Pretravel** | 15° max. |
| **Differential travel** | 5° max. |
| **Overtravel** | 60’ min. |
| **Total travel** | 75° nom. |
| **Operating torque** | 0,085 Nm [12 in-oz] max. |

NOTE: Same polarity each pole.

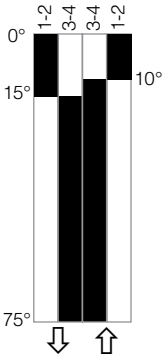

# MICRO SWITCH™ Heavy-Duty Limit Switches

**This datasheet supports the following MICRO SWITCH™ HDLS Series Heavy-Duty Limit Switches.**

LS2A4K
LS2A4KC
LS2A4KPC
LS2A4KY-FP
LS2A4L
LS2A4L-RS
LS2A4LX-FP
LS2C4L
LS2D3N
LS2D4K
LS2D4KC
LS2D4L
LS2D4LM
LS2D4L-RS
LS2E4K
LS2E4L
LS2F4K
LS2F4L
LS2F4L5
LS2H3K
LS2H4K
LS2H4L
LS2H4L3
LS2M4N
LS2M4N3
LS2M4NM
LS2N3K
LS2YAB4K
LS2YAB4L
LS2YAB4L5M
LS2YCB4K
LS2YDB4K
LS2YEB4K
LS2YMB4N
LS2Z1A
LS2Z1AB
LS2Z1D
LS2Z1E
LS2Z1F
LS2Z1H
LS2Z1N
LS2Z51A
LS2Z51B
LS2Z51D
LS2Z51R
LS2Z52A
LS2Z52B
LS2Z52D
LS2Z54N
LS2Z54N-C
LS2Z616
LS30218
LS3A1A
LS3A2B
LS3A3K
LS3A3K-7AA
LS3A3K-7AA-RS
LS3D3K
LS3F1A8
LS3F1E
LS3M2D
LS3YDC1A
LS3YDC1E
LS3YVC1A
LS3YVC1E
LS4A1A
LS4A1E
LS4A1J
LS4A2B
LS4A3K
LS4A3K-1B
LS4A3K-2B
LS4A3K-7AA
LS4C1A
LS4C3K
LS4D1A
LS4D3K
LS4F1A
LS4F2B
LS4H1A
LS4J1A-7A
LS4J1A-7M
LS4J1A-7N
LS4J2B-7N
LS4K1A-8A
LS4K1A-8C
LS4L6C
LS4M2D
LS4N1A
LS4N2B
LS4P1A
LS4W1A
LS4YAC1A
LS4YDC1E
LS4YEC1A
LS4YJC1A-7N
LSA1A
LSA1A1
LSA1A1-1A
LSA1A1-1B
LSA1A1-2J
LSA1A13
LSA1A14
LSA1A15
LSA1A-1A
LSA1A-1B
LSA1A-1C
LSA1A-1D
LSA1A-1F
LSA1A-1L
LSA1A-1M
LSA1A1S
LSA1A2
LSA1A2-2J
LSA1A-2A
LSA1A-2B
LSA1A-2C
LSA1A-2D
LSA1A-2E
LSA1A-2J
LSA1A-2K
LSA1A3
LSA1A3-1B
LSA1A3-5C
LSA1A4
LSA1A-4
LSA1A-4M
LSA1A-4N
LSA1A-4R
LSA1A5
LSA1A-9B
LSA1AA
LSA1AB
LSA1AB-1B
LSA1AC
LSA1AC-2C
LSA1AC-4M
LSA1AH12
LSA1E
LSA1E-1B
LSA1E-2A
LSA1E-2D
LSA1F
LSA2B
LSA2B15-5D
LSA2B-1A
LSA2B-1B
LSA2B-1C
LSA2B-1D
LSA2B25-5D
LSA2B-2A
LSA2B-2B
LSA2B-2C
LSA2B-2D
LSA2B3-5C
LSA2B4
LSA2B5
LSA2F
LSA2R
LSA2S
LSA3K
LSA3K1
LSA3K1-1A
LSA3K1-1B
LSA3K-1A
LSA3K-1B
LSA3K1C-1C
LSA3K-1D
LSA3K-1N
LSA3K-2A
LSA3K-2B
LSA3K-2C
LSA3K-2D
LSA3K-2J
LSA3K3
LSA3K4
LSA3K4-1A
LSA3K4-1B
LSA3K4-1D
LSA3K-4M
LSA3K-4N
LSA3K-4R
LSA3K-5C
LSA3KA
LSA3KC
LSA3N
LSA3N14-2J
LSA4L
LSA4L1
LSA4L-1A
LSA4L-1B
LSA4L-1D
LSA4L23
LSA4L-2A
LSA4L-2B
LSA4L3-1D
LSA4L4
LSA4L4-1D
LSA4S
LSA5A
LSA5A15
LSA5A-1A
LSA5A-1B
LSA5A-1C
LSA5A-1D
LSA5A25
LSA5A7B
LSA5AB-1A
LSA5AB-1B
LSA5ADD
LSA6B
LSA6B1
LSA6B-1A
LSA6B-1B
LSA6B-1D
LSA6B-1F
LSA6B-1L
LSA6B-2B
LSA6B-2C
LSA6B-2D
LSA6B-3D
LSA6B4-2C
LSA6R
LSA6S
LSA7L
LSA7L-1A
LSA7L-1B
LSA7L-1C
LSA7L-1D
LSA7L-2D
LSA7L-2J
LSA7L3-1B
LSA7L4
LSA7L-4N
LSA7L-4R
LSA7L-5C
LSA8A
LSA8A7
LSA9A
LSA9A-1A
LSA9A23
LSA9A-2L
LSA9ADD
LSA9EDD
LSB1A
LSB1A1
LSB1A-1B
LSB1A-4M
LSB1A-4N
LSB1AC
LSB1E
LSB2B
LSB2R
LSB3K
LSB3K-1B
LSB3K-1D
LSB3K-2C
LSB4L
LSB5A
LSB5A-2D
LSB6B
LSB6B-4N
LSB7L
LSB7L-1B
LSB9A
LSC1A
LSC1E
LSC2B
LSC2C
LSC3K
LSC3KC
LSC4L
LSC5A
LSC6B
LSC7L
LSC8A
LSD1A
LSD1A6
LSD1E
LSD1F
LSD2B
LSD2F
LSD3K
LSD3K6
LSD4L
LSD5A
LSD5A7
LSD6B
LSD7L
LSD8A
LSD9A
LSE1A
LSE1A3
LSE1A4
LSE1A5
LSE1ADD
LSE1E
LSE1E4
LSE2B
LSE3K
LSE4L
LSE5A
LSE6B
LSE6B5
LSE6C5
LSE6S
LSE7L
LSE7L3
LSE9A
LSF1A
LSF1A3
LSF1A4
LSF1A5
LSF1A8
LSF1E
LSF1F
LSF2B
LSF2C
LSF3K
LSF3K3
LSF3K4
LSF3K5
LSF3K8
LSF3N
LSF4L
LSF5A
LSF6B
LSF6B3
LSF7L
LSF7L3
LSF7L4
LSF7L5
LSF7L8
LSF8A
LSF9A
LSG1A
LSG1E
LSG2B
LSG3K
LSG4L
LSG5A
LSG6B
LSG7L
LSG9A
LSH1A
LSH1A-1B
LSH1A2
LSH1A-2B
LSH1A-2D
LSH1AB
LSH1E
LSH1E-1A
LSH2B
LSH2B-1B
LSH2B-2D
LSH3K
LSH4L
LSH4L13
LSH4L-1B
LSH4L3
LSH5A
LSH5A-1L
LSH5A-4N
LSH6B
LSH6B-1B
LSH7L
LSH9A
LSH9A7
LSJ1A
LSJ1A-1N
LSJ1A-7A
LSJ1A-7M
LSJ1A-7N
LSJ1AB-7N
LSJ1AC-7M
LSJ1AC-7N
LSJ1ADD-7A
LSJ1E-7A
LSJ1E-7M
LSJ2B-7A
LSJ2B-7M
LSJ2B-7N
LSJ3K
LSJ3K-7A
LSJ3K-7M
LSJ3K-7N
LSJ4L-7A
LSJ4L-7M
LSJ5A-7A
LSJ5A-7M
LSJ5A-7N
LSJ6B
LSJ6B-7A
LSJ6B-7M
LSJ6B-7N
LSJ7L-7A
LSJ7L-7M
LSJ7L-7N
LSJ8A-7A
LSK1A
LSK1A-8A
LSK1A-8B
LSK1A-8C
LSK1E-8A
LSK1E-8C
LSK1J-8C
LSK2B-8A
LSK2B-8C
LSK3K
LSK3K-8A
LSK3K-8B
LSK3K-8C
LSK4L-8A
LSK4L-8C
LSK5A-8A
LSK5A-8B
LSK5A-8C
LSK6B
LSK6B-8A
LSK6B-8B
LSK6B-8C
LSK7L-8A
LSK7L-8B
LSK7L-8C
LSK8A-8A
LSK8A-8B
LSK8A-8C
LSK9A-8C
LSL2C
LSL2C-2D
LSL2G
LSL4M
LSL4M4
LSL6C
LSL6C-4N
LSL7M
LSL7M-1P
LSM2D
LSM2D-1A
LSM2D-1B
LSM2D-1D
LSM2D-2D
LSM2D-2J
LSM2DM
LSM2H
LSM2U
LSM4N
LSM4N-1A
LSM4N-1B
LSM4N-2B
LSM6D
LSM6D-1B
LSM6D-1D
LSM6D-1F
LSM6D-1P
LSM6D-2A
LSM6D-2B
LSM6D3
LSM6D4
LSM6D4-5D
LSM6D-5B
LSM6U
LSM7N
LSM7N-1A
LSM7N-1B
LSM7N-1D
LSM7N3
LSM7N-4
LSM7U
LSM7U-2D
LSN1A
LSN1A-1B
LSN1A-2C
LSN1A-3A
LSN1A-3B
LSN1A-3D
LSN1A-3P
LSN1A-3S
LSN1E
LSN1E-1A
LSN1F
LSN1F-1B
LSN2B
LSN3K
LSN3N
LSN4L
LSN4L-2D
LSN4L-3B
LSN4L-3D
LSN5A
LSN6B
LSN6B-3B
LSN6B-3D
LSN7L
LSN8A
LSN8A37
LSN9A
LSN9EDD
LSP1A
LSP1A-1B
LSP1A-1C
LSP1A-1D
LSP1A2
LSP1A25
LSP1A-2A
LSP1A-2D
LSP1A4
LSP1A-4M
LSP1A5-1C
LSP1AB
LSP1E
LSP1E-1A
LSP1F
LSP2B
LSP2B-1B
LSP3K
LSP3K-1B
LSP3K-1D
LSP3K3
LSP4L
LSP4L3
LSP4L-4N
LSP4L5
LSP5A
LSP5A7
LSP6B
LSP7L
LSP7L-2D
LSP7L3
LSP7S3
LSP8A
LS-PA5A4
LSPA5D2
LSPA5D4
LSQ037
LSQ038
LSQ051
LSQ052
LSQ053
LSQ054
LSQ081
LSQ117-QC
LSQ2A4L352
LSQ2H4KP227
LSQ2L4M321
LSQ300
LSQ310-20
LSQ3A3K281-VL363
LSQ3N2D3357
LSQA1A278
LSQA1A313
LSQA1A366
LSQA3K129
LSQA3K163
LSQA3K-2C-SCO
LSQA3K363
LSQA6B134
LSQA6B314
LSQD3K-SCO
LSQE3K318
LSQH1A322
LSQJ1A213
LSQL7M122
LSQL7M123
LSQM6D315
LSQMC7N147
LSQMC7N148
LSQMC7N311
LSQR1A316
LSQUB1A323
LSQUB7N191
LSQUC3K170
LSQUC5K272
LSQYAB1AC365
LSQYAB4L347
LSQYAB4LX249
LSQYDB3K356
LSQYFB1A344
LSQYFB3K125-QC
LSQYFB3K345
LSQYFC3K223
LSQYJB1A346
LSQYMC7N361
LSQYPB3KP364
LSQYUB1A334
LSQYUB3K336
LSQYUB3K339
LSQYUB3KC319

# HDLS Series

LSQZ52J
LSQZ55C259
LSR1A
LSR1A-1A
LSR1A-1B
LSR1A-2K
LSR1A-4N
LSR1A-5C
LSR1ADD
LSR1E
LSR2B
LSR2B-4N
LSR3K
LSR3K1
LSR3K-4M
LSR4L
LSR5A
LSR6B
LSR6B-2D
LSR6B-2L
LSR6B-4M
LSR7L
LSR7L-2D
LSR9A
LSS1H
LSS1H-4N
LSS1HDD
LSS1HDD-C
LST1H
LST1H-1C
LSU1A
LSU1A-1
LSU1A-1B
LSU1A-1D
LSU1A-2B
LSU1A-2D
LSU1A4
LSU1A-4R
LSU1E
LSU2B
LSU3K
LSU3K1
LSU3K-1A
LSU3K-2J
LSU4L
LSU5A
LSU6B
LSU7L
LSU8A
LSU9A
LSV1A
LSV1E
LSV2B
LSV3K
LSV4L
LSV5A
LSV6B
LSV7L
LSW1A
LSW1A4
LSW1A5
LSW1AC
LSW1E
LSW2B
LSW3K
LSW3N
LSW4L
LSW5A
LSW6B
LSW7L
LSYAB1A
LSYAB1A-1B
LSYAB1A-2A
LSYAB1A3
LSYAB1A-4N
LSYAB1AB
LSYAB1AC
LSYAB1E
LSYAB1E-2B
LSYAB1E4-2B
LSYAB1EP-1A
LSYAB1F
LSYAB2B
LSYAB2B3
LSYAB2F
LSYAB2S
LSYAB3K
LSYAB3K1
LSYAB3K-1B
LSYAB3K2-5C
LSYAB3K-2J
LSYAB3K-5D
LSYAB3KE-FP
LSYAB3KPC-FP
LSYAB3KP-FP
LSYAB3KQ-FP
LSYAB3N
LSYAB3N-4N
LSYAB4L
LSYAB4L-1B
LSYAB4L24
LSYAB4L24-1
LSYAB4L-2A
LSYAB4L360
LSYAB4L4
LSYAB4LX-FP
LSYAB4S
LSYAB5A
LSYAB6B
LSYAB6B-1B
LSYAB6B-2D
LSYAB7L
LSYAB7L-1A
LSYAB7L-2B
LSYAC1A
LSYAC1A1-1D
LSYAC1A-1B
LSYAC1A2C
LSYAC1A-2D
LSYAC1A-4N
LSYAC1A-C
LSYAC1ADD
LSYAC1ADD-1B
LSYAC1ADD-4N
LSYAC1ADD-C
LSYAC1AH
LSYAC1E
LSYAC1EC
LSYAC2B
LSYAC2R
LSYAC2S
LSYAC3K
LSYAC3KC-FP
LSYAC3KDD-FP
LSYAC3KP
LSYAC3KPB-FP
LSYAC3KPC-FP
LSYAC3KP-FP
LSYAC3KQ-1BFP
LSYAC3KQ-FP
LSYAC3KQ-FP-C
LSYAC3KY-FP
LSYAC3N
LSYAC4L
LSYAC4L4
LSYAC4LAA-FP
LSYAC4LX-FP
LSYAC5A
LSYAC5KPC-FP
LSYAC5KP-FP
LSYAC5KQ-FP
LSYAC5KY-FP
LSYAC6B
LSYAC6B-1A
LSYAC6B-1B
LSYAC6B-2L
LSYAC6B-4N
LSYAC7L
LSYAC7LR-FP
LSYAC9A
LSYAC9AB
LSYBB1A
LSYBB2B
LSYBB3K
LSYBB3KP-FP
LSYBB4L
LSYBB5KP-FP
LSYBC1A
LSYBC3K
LSYBC3KP-FP
LSYBC3KQ-FP
LSYBC5A
LSYBC5KP-FP
LSYBC9A-1D
LSYCB1A
LSYCB1E
LSYCB3KQ-FP
LSYCB4L
LSYCB4SX-FP
LSYCB6B
LSYCB9A7
LSYCC1A
LSYCC1ADD
LSYCC1ADD-C
LSYCC1AE
LSYCC3K
LSYCC3KP-FP
LSYCC3KQ-FP
LSYCC3KY-FP
LSYCC4L
LSYCC4LX-FP
LSYCC5A
LSYCC5KP-FP
LSYCC5KY-FP
LSYCC6B
LSYCC7L
LSYDB1A
LSYDB2B
LSYDB3K
LSYDB4L
LSYDB6B
LSYDB7L
LSYDC1A
LSYDC1ADD
LSYDC1ADD-C
LSYDC1AE
LSYDC3K
LSYDC3KPC-FP
LSYDC3KP-FP
LSYDC3KQ-FP
LSYDC3KY-FP
LSYDC4LX-FP
LSYDC5A
LSYDC5AC
LSYDC5AE
LSYDC5KP-FP
LSYDC5KQ-FP
LSYDC5KY-FP
LSYDC6B
LSYDC7L
LSYDC9KP-FP
LSYEB4L5
LSYEC1A
LSYEC1ADD
LSYEC1ADD-C
LSYEC1AE
LSYEC3K
LSYEC3KP-FP
LSYEC3KQ-FP
LSYEC3KY-FP
LSYEC4LX-FP
LSYEC5KP-FP
LSYEC5KY-FP
LSYEC6B
LSYFB1A
LSYFB3K
LSYFB3K3
LSYFB3K4
LSYFB4L
LSYFB4LM
LSYFB4LX-FP
LSYFB7L
LSYFC1A
LSYFC1ADD
LSYFC1ADD-C
LSYFC1AE
LSYFC3K
LSYFC3K48P-FP
LSYFC3KP-FP
LSYFC3KQ-FP
LSYFC3KY-FP
LSYFC5KQ-FP
LSYFC6B
LSYFC7L
LSYFC7L3
LSYFC7L4
LSYGB1A
LSYGB1E
LSYGC3KP-FP
LSYHB1A
LSYHC1A
LSYHC3K
LSYHC3KA
LSYHC3KP-FP
LSYHC4L
LSYHC4LX-FP
LSYHC7L
LSYJB1A-7A
LSYJB1A-7M
LSYJB1A-7N
LSYJB1E-7A
LSYJB1E-7M
LSYJB1J-7A
LSYJB2B-7M
LSYJB3K-7A
LSYJB3K-7M
LSYJB3K-7N
LSYJB3KQ-7MFP
LSYJB4L-7M
LSYJB4LX-7AFP
LSYJB5A-7A
LSYJB6B-7M
LSYJC1A-7A
LSYJC1A-7M
LSYJC1A-7N
LSYJC1AC-7M
LSYJC1ADD-7A
LSYJC1ADD-7N
LSYJC3K-7A
LSYJC3K-7N
LSYJC3KP-7AFP
LSYJC3KP-7MFP
LSYJC3KQ-7AFP
LSYJC3KQ-7MFP
LSYJC3KQ-7NFP
LSYJC5KQ-7MFP
LSYJC6B-7M
LSYJC7LR-7MFP
LSYJC7LR-7NFP
LSYKB1A-8A
LSYKB1A-8C
LSYKB3K-8C
LSYKB4L-8C
LSYKB4LM-8C
LSYKB6B-8C
LSYKB7L-8C
LSYKC1A-8A
LSYKC1A-8C
LSYKC1AC-8A
LSYKC1AC-8C
LSYKC1ADD-8C
LSYKC1ADD-8C-C
LSYKC1E-8C
LSYKC3K-8C
LSYKC3KP-8AFP
LSYKC3KQ-8CFP
LSYKC4L-8C
LSYKC5KQ-8BFP
LSYKC7LR-8AFP
LSYLB4M
LSYLB6C
LSYLB6T
LSYLB7M
LSYLB7MR-FP
LSYLB7T
LSYLC2C
LSYLC4M
LSYLC4MX-FP
LSYLC6C
LSYMB2D
LSYMB2D3
LSYMB4N
LSYMB4N-1A
LSYMB4N-2K
LSYMB4N3X-FP
LSYMB4NX-FP
LSYMB6D
LSYMB6D-2D
LSYMB6U
LSYMB7N
LSYMB7N-1C
LSYMB7N-1D
LSYMB7N3
LSYMB7N3-1A
LSYMB7U
LSYMC2D-1D
LSYMC4N
LSYMC4NX-1BFP
LSYMC4NXB-FP
LSYMC4NX-FP
LSYMC6D
LSYMC6D-1B
LSYMC6DF
LSYMC6DF-1B
LSYMC7N
LSYMC7NDE-FP
LSYMC7NR-FP
LSYNB1A
LSYNB1AC
LSYNB2B
LSYNB3K
LSYNB3K-3S
LSYNB3K5-3S
LSYNB3KP-FP
LSYNB3KQ-3BFP
LSYNB4L
LSYNB4L-3P
LSYNB4LX-FP
LSYNB5A
LSYNB7L
LSYNC1A
LSYNC1ADD
LSYNC1E
LSYNC3KPC-FP
LSYNC3KP-FP
LSYNC3KQ-FP
LSYNC4LX-FP
LSYNC5KQ-FP
LSYPB1A
LSYPB1AC
LSYPB1E
LSYPB2B
LSYPB2B-4N
LSYPB3K
LSYPB3K3
LSYPB3K4
LSYPB3KP-FP
LSYPB4L
LSYPB4L-1B
LSYPB4L3
LSYPB4L-4N
LSYPB6B
LSYPB7L
LSYPB7L3
LSYPC1A
LSYPC1J
LSYPC2B
LSYPC2B-1B
LSYPC3K
LSYPC3KP-FP
LSYPC3KQ-FP
LSYPC3KY-FP
LSYPC4LX-FP
LSYRB1A
LSYRB3KP-FP
LSYRB6B
LSYRC1A
LSYRC1A3
LSYRC1ADD
LSYRC1ADD-C
LSYRC1E3
LSYRC2B
LSYRC3KP-FP
LSYRC4L
LSYRC4LX-FP
LSYRC5KP-FP
LSYRC5KQ-FP
LSYRC9A
LSYUB1A
LSYUB1A13
LSYUB1A13-2A
LSYUB1A13-2B
LSYUB1A23
LSYUB1A23-2D
LSYUB1A3
LSYUB2B
LSYUB3K
LSYUB6B
LSYUB6B13
LSYUB6B3
LSYUB9AC
LSYUC1A
LSYUC1A-1B
LSYUC1ADD
LSYUC2B
LSYUC3KP-FP
LSYUC3KQ-FP
LSYUC3KY-FP
LSYUC4LX-FP
LSYUC5KQ-FP
LSYUC6B
LSYUC9ADD
LSYVB1A
LSYVB2B
LSYVB3K
LSYVB4L
LSYVC1A
LSYVC3KP-FP
LSYVC3KQ-FP
LSYVC3KY-FP
LSYVC7L
LSYWB1A
LSYWB3K
LSYWB3KQ-FP
LSYWC1A
LSYWC1ADD
LSYWC1F
LSYWC3KP-FP
LSYWC3KY-FP
LSYWC5KQ-FP
LSYWC6B
LSYWC7L
LSZ51
LSZ51A
LSZ51B
LSZ51B-C
LSZ51C
LSZ51CA
LSZ51D
LSZ51D-C
LSZ51F
LSZ51G
LSZ51J
LSZ51L
LSZ51M
LSZ51N
LSZ51P
LSZ51R
LSZ51T
LSZ51U
LSZ51W
LSZ51Y
LSZ52
LSZ52A
LSZ52B
LSZ52C
LSZ52D
LSZ52E
LSZ52J
LSZ52K
LSZ52L
LSZ52M
LSZ52N
LSZ52R
LSZ52W
LSZ52Y
LSZ53
LSZ53A
LSZ53B
LSZ53D
LSZ53E
LSZ53M
LSZ53P
LSZ53S
LSZ53U
LSZ53W
LSZ54
LSZ54M
LSZ54N
LSZ54NA
LSZ54N-C
LSZ54P
LSZ54R
LSZ54SM
LSZ54T
LSZ54V
LSZ54W
LSZ55
LSZ55A
LSZ55B
LSZ55C
LSZ55D
LSZ55E
LSZ55F
LSZ55K
LSZ55W
LSZ55Y
LSZ56
LSZ56A
LSZ56B
LSZ56C
LSZ56D
LSZ56E
LSZ56J
LSZ56K
LSZ56L
LSZ56M
LSZ56N
LSZ581B
LSZ59
LSZ59A
LSZ59AC
LSZ59B
LSZ59C
LSZ59D
LSZ59L
LSZ60A
LSZ60B
LSZ61
LSZ616
LSZ617
LSZ618
LSZ65AA
LSZ65AB
LSZ65AF
LSZ65BA
LSZ65CA
LSZ65CB
LSZ65CD
LSZ65DA
LSZ65DB
LSZ65DC
LSZ65DD
LSZ65EA
LSZ65EB
LSZ65ED
LSZ65EE
LSZ65FA
LSZ65FB
LSZ65FD
LSZ65FF
LSZ65GA
LSZ65GB
LSZ65HA
LSZ65HB
LSZ65HC
LSZ65HD
LSZ65HE
LSZ65JA
LSZ65JB
LSZ65JD
LSZ65JE
LSZ65JF
LSZ65KA
LSZ65KB
LSZ65LA
LSZ65LB
LSZ67AA
LSZ68
LSZ686
LSZ69CA
LSZ69DA

# MICRO SWITCH™ Heavy-Duty Limit Switches

## ALSO AVAILABLE

**Fully potted MICRO SWITCH™ HDLS heavy-duty limit switches** provide an extra degree of protection in harsh environments by sealing the basic switch cavity with epoxy. These switches are the same as the non- plug-in HDLS except that the entire switch cavity is filled with epoxy in addition to the conduit entrance. The fully potted HDLS switches are pre-leaded, with either cable or connectors.

- Excellent sealing capability for harsh-duty food and beverage wash downs and severe machine tool environments
- Diaphragm sealing
- 12 inch STOOW-A cable (other lengths available) or connector version
- Cable versions: NEMA 1, 6, 6P, 12
- Connector versions: NEMA 1, 6, 6P, 12, 13
- All fluorocarbon seals (low temperature fluorosilicone seals available)
- UL, CSA, CE, CCC

**MICRO SWITCH™ HDLS switches are also available in all stainless-steel versions.** Designed for use in highly corrosive environments, such as petrochemical plants, food processing plants, shipboard, and dockside locations. The type 316 cast stainless steel body is designed to minimize crevices where food particles could become trapped in water. The actuator, operating head, and screws are also stainless steel. All seals are fluorocarbon to provide excellent chemical resistance and to withstand operating temperatures up to 121 °C [250 °F] and pressurized steam cleaning. Pre-leaded and epoxy-filled versions also available.

- Corrosion-resistant stainless steel non-plug in body, head, and rotary shaft
- Stainless steel levers
- Fluorocarbon seals (low temperature fluorosilicone seals available)
- NEMA 1, 3, 3R, 4, 4X, 6, 6P, and 13
- UL, CSA, CE, CCC

To learn more about Honeywell's HDLS products, call **+1-815-235-6847 or 1-800-537-6945.**

## ADDITIONAL INFORMATION

The following associated literature is available on the Web at sensing.honeywell.com:

- Product installation instructions
- Product range guide
- Product nomenclature tree
- Product application-specific information
  - Application Note: Sensors and Switches in Oil Rig Applications
  - Application Note: Sensors and Switches for Industrial Manual Process Valves
  - Application Note: Sensors and Switches Used in Valve Actuators and Valve Positioners

**⚠ WARNING**

**PERSONAL INJURY**

**DO NOT USE** these products as safety or emergency stop devices or in any other application where failure of the product could result in personal injury.

**Failure to comply with these instructions could result in death or serious injury.**

**⚠ WARNING**

**MISUSE OF DOCUMENTATION**

- The information presented in this product sheet is for reference only. Do not use this document as a product installation guide.
- Complete installation, operation, and maintenance information is provided in the instructions supplied with each product.

**Failure to comply with these instructions could result in death or serious injury.**

## WARRANTY/REMEDY

Honeywell warrants goods of its manufacture as being free of defective materials and faulty workmanship. Honeywell's standard product warranty applies unless agreed to otherwise by Honeywell in writing; please refer to your order acknowledgement or consult your local sales office for specific warranty details. If warranted goods are returned to Honeywell during the period of coverage, Honeywell will repair or replace, at its option, without charge those items it finds defective. **The foregoing is buyer's sole remedy and is in lieu of all other warranties, expressed or implied, including those of merchantability and fitness for a particular purpose. In no event shall Honeywell be liable for consequential, special, or indirect damages.**

While we provide application assistance personally, through our literature and the Honeywell website, it is up to the customer to determine the suitability of the product in the application.

Specifications may change without notice. The information we supply is believed to be accurate and reliable as of this printing. However, we assume no responsibility for its use.

**Find out more**

Honeywell serves its customers through a worldwide network of sales offices, representatives and distributors. For application assistance, current specifications, pricing or name of the nearest Authorized Distributor, contact your local sales office.

To learn more about Honeywell's sensing and control products, call **+1-815-235-6847 or 1-800-537-6945**, visit **sensing.honeywell.com,** or e-mail inquiries to **info.sc@honeywell.com**

Sensing and Control
Honeywell
1985 Douglas Drive North
Golden Valley, MN 55422
**honeywell.com**

Honeywell

002345-5-EN IL50 GLO
September 2014
Copyright © 2014 Honeywell International Inc. All rights reserved.

Мы молодая и активно развивающаяся компания в области поставок электронных компонентов. Мы поставляем электронные компоненты отечественного и импортного производства напрямую от производителей и с крупнейших складов мира.

Благодаря сотрудничеству с мировыми поставщиками мы осуществляем комплексные и плановые поставки широчайшего спектра электронных компонентов.

Собственная эффективная логистика и склад в обеспечивает надежную поставку продукции в точно указанные сроки по всей России.

Мы осуществляем техническую поддержку нашим клиентам и предпродажную проверку качества продукции. На все поставляемые продукты мы предоставляем гарантию .

Осуществляем поставки продукции под контролем ВП МО РФ на предприятия военно-промышленного комплекса России , а также работаем в рамках 275 ФЗ с открытием отдельных счетов в уполномоченном банке. Система менеджмента качества компании соответствует требованиям ГОСТ ISO 9001.

Минимальные сроки поставки, гибкие цены, неограниченный ассортимент и индивидуальный подход к клиентам являются основой для выстраивания долгосрочного и эффективного сотрудничества с предприятиями радиоэлектронной промышленности, предприятиями ВПК и научно-исследовательскими институтами России.

С нами вы становитесь еще успешнее!

**Наши контакты:**

**Телефон:** +7 812 627 14 35

**Электронная почта:** sales@st-electron.ru

**Адрес:** 198099, Санкт-Петербург, Промышленная ул, дом № 19, литера Н, помещение 100-Н Офис 331