Datasheet

S124 Microcontroller Group

Datasheet

Renesas Synergy™ Platform

Synergy Microcontrollers
S1 Series

All information contained in these materials, including products and product specifications, represents information on the product at the time of publication and is subject to change by Renesas Electronics Corp. without notice. Please review the latest information published by Renesas Electronics Corp. through various means, including the Renesas Electronics Corp. website (http://www.renesas.com).

Renesas Electronics
www.renesas.com

Rev.1.30 Feb 2018

Ultra-low power 32-MHz Arm® Cortex®-M0+ microcontroller, 128-KB code flash memory, 16-KB SRAM, Capacitive Touch Sensing Unit, 14-bit A/D Converter, 12-bit D/A Converter, security and safety features.

Features

■ Arm Cortex-M0+ Core
- Armv6-M architecture
- Maximum operating frequency: 32 MHz
- Debug and Trace: DWT, BPU, CoreSight™ MTB-M0+
- CoreSight Debug Port: SW-DP

■ Memory
- 128-KB code flash memory
- 4-KB data flash memory (100,000 erase/write cycles)
- Up to 16-KB SRAM
- 128-bit unique ID

■ Connectivity
- USB 2.0 Full-Speed Module (USBFS)
  - On-chip transceiver with voltage regulator
  - Compliant with USB Battery Charging Specification 1.2
- Serial Communications Interface (SCI) × 3
  - UART
  - Simple IIC
  - Simple SPI
- Serial Peripheral Interface (SPI) × 2
- I^2C bus interface (IIC) × 2
- CAN module (CAN)

■ Analog
- 14-Bit A/D Converter (ADC14)
- 12-Bit D/A Converter (DAC12)
- Low-Power Analog Comparator (ACMPLP) × 2
- Temperature Sensor (TSN)

■ Timers
- General PWM Timer 32-Bit (GPT32)
- General PWM Timer 16-Bit (GPT16) × 6
- Asynchronous General-Purpose Timer (AGT) × 2
- Watchdog Timer (WDT)

■ Safety
- SRAM Parity Error Check
- Flash Area Protection
- ADC self-diagnosis function
- Clock Frequency Accuracy Measurement Circuit (CAC)
- Cyclic Redundancy Check (CRC) Calculator
- Data Operation Circuit (DOC)
- Port Output Enable for GPT (POEG)
- Independent Watchdog Timer (IWDT)
- GPIO Readback Level Detection
- Register Write Protection
- Main Oscillator Stop Detection

■ System and Power Management
- Low-power modes
- Realtime Clock (RTC)
- Event Link Controller (ELC)
- Data Transfer Controller (DTC)
- Key Interrupt Function (KINT)
- Power-on reset
- Low Voltage Detection with voltage settings

■ Security and Encryption
- AES128/256
- True Random Number Generator (TRNG)

■ Human Machine Interface (HMI)
- Capacitive Touch Sensing Unit (CTSU)

■ Multiple Clock Sources
- Main clock oscillator (MOSC)
  (1 to 20 MHz when VCC = 2.4 to 5.5 V)
  (1 to 8 MHz when VCC = 1.8 to 5.5 V)
  (1 to 4 MHz when VCC = 1.6 to 5.5 V)
- Sub-clock oscillator (SOSC) (32.768 kHz)
- High-speed on-chip oscillator (HOCO)
  (24, 32, 48, 64 MHz when VCC = 2.4 to 5.5 V)
  (24, 32, 48 MHz when VCC = 1.8 to 5.5 V)
  (24, 32 MHz when VCC = 1.6 to 5.5 V)
- Middle-speed on-chip oscillator (MOCO) (8 MHz)
- Low-speed on-chip oscillator (LOCO) (32.768 kHz)
- Independent watchdog timer OCO (15 kHz)
- Clock trim function for HOCO/MOCO/LOCO
- Clock out support

■ General Purpose I/O Ports
- Up to 51 input/output pins
  - Up to 3 CMOS input
  - Up to 48 CMOS input/output
    - Up to 6 input/output 5 V tolerant
    - Up to 16 pins high current (20 mA)

■ Operating Voltage
- VCC: 1.6 to 5.5 V

■ Operating Temperature and Packages
- Ta = –40°C to +85°C
  - 36-pin LGA (4 mm × 4 mm, 0.5 mm pitch)
- Ta = –40°C to +105°C
  - 64-pin LQFP (10 mm × 10 mm, 0.5 mm pitch)
  - 48-pin LQFP (7 mm × 7 mm, 0.5 mm pitch)
  - 64-pin QFN (8 mm × 8 mm, 0.4 mm pitch)
  - 48-pin QFN (7 mm × 7 mm, 0.5 mm pitch)
  - 40-pin QFN (6 mm × 6 mm, 0.5 mm pitch)

1. Overview

The MCU integrates multiple series of software- and pin-compatible Arm®-based 32-bit MCUs that share a common set of Renesas peripherals to facilitate design scalability and efficient platform-based product development.

Based on the energy-efficient Arm Cortex®-M0+ core, the MCU is particularly well suited for cost-sensitive and low-power applications with the following features:

- 128-KB code flash memory
- 16-KB SRAM
- Capacitive Touch Sensing Unit (CTSU)
- 14-bit A/D Converter (ADC14)
- 12-bit D/A Converter (DAC12)
- Security features.

1.1 Function Outline

Table 1.1 Arm core

Feature	Functional description
Arm Cortex-M0+	• Maximum operating frequency: up to 32 MHz • Arm Cortex-M0+: - Revision: r0p1-00rel0 - Armv6-M architecture profile - Single-cycle integer multiplier. • SysTick timer - Driven by SYSTICCLK (LOCO) or ICLK.

Table 1.2 Memory

Feature	Functional description
Code flash memory	Maximum 128 KB code flash memory. See section 37, Flash Memory in User's Manual.
Data flash memory	4 KB data flash memory. See section 37, Flash Memory in User's Manual.
Option-setting memory	The option-setting memory determines the state of the MCU after a reset. See section 6, Option-Setting Memory in User's Manual.
SRAM	On-chip high-speed SRAM with even parity bit. See section 36, SRAM in User's Manual.

Table 1.3 System (1 of 2)

Feature	Functional description
Operating mode	Two operating modes: • Single-chip mode • SCI boot mode. See section 3, Operating Modes in User's Manual.
Reset	9 types of resets: • RES pin reset • Power-on reset • Independent watchdog timer reset • Watchdog timer reset • Voltage monitor 0 reset • Voltage monitor 1 reset • Voltage monitor 2 reset • SRAM parity error reset • Software reset. See section 5, Resets in User's Manual.
Low Voltage Detection (LVD)	The Low Voltage Detection (LVD) monitors the voltage level input to the VCC pin and the detection level can be selected using a software program. See section 7, Low Voltage Detection (LVD) in User's Manual.

Table 1.3 System (2 of 2)

Feature	Functional description
Clock	• Main clock oscillator (MOSC) • Sub-clock oscillator (SOSC) • High-speed on-chip oscillator (HOCO) • Middle-speed on-chip oscillator (MOCO) • Low-speed on-chip oscillator (LOCO) • Independent watchdog timer on-chip oscillator • Clock out support. See section 8, Clock Generation Circuit in User's Manual.
Clock Frequency Accuracy Measurement Circuit (CAC)	The Clock Frequency Accuracy Measurement Circuit (CAC) is used to check the system clock frequency with a reference clock signal by counting the number of pulses of the system clock to be measured. The reference clock can be provided externally through a CACREF pin or internally from various on-chip oscillators. Event signals can be generated when the clock does not match or measurement ends. This feature is particularly useful in implementing a fail-safe mechanism for home and industrial automation applications. See section 9, Clock Frequency Accuracy Measurement Circuit (CAC) in User's Manual.
Interrupt Controller Unit (ICU)	The Interrupt Controller Unit (ICU) controls which event signals are linked to the NVIC/DTC module and DMAC module. The ICU also controls NMI interrupts. See section 12, Interrupt Controller Unit (ICU) in User's Manual.
Key interrupt function (KINT)	A key interrupt can be generated by setting the Key Return Mode register (KRM) and inputting a rising or falling edge to the key interrupt input pins. See section 17, Key Interrupt Function (KINT) in User's Manual.
Low Power Mode	Power consumption can be reduced in multiple ways, including setting clock dividers, stopping modules, selecting power control mode in normal operation, and transitioning to low power modes. See section 10, Low Power Modes in User's Manual.
Register Write Protection	The Register Write Protection function protects important registers from being overwritten due to software errors. See section 11, Register Write Protection in User's Manual.
Watchdog Timer (WDT)	The Watchdog Timer (WDT) is a 14-bit down-counter. It can be used to reset the MCU when the counter underflows because the system has run out of control and is unable to refresh the WDT. In addition, a non-maskable interrupt or interrupt can be generated by an underflow. The refresh-permitted period can be set to refresh the counter and used as the condition to detect when the system runs out of control. See section 22, Watchdog Timer (WDT) in User's Manual.
Independent Watchdog Timer (IWDT)	The Independent Watchdog Timer (IWDT) consists of a 14-bit down-counter that must be serviced periodically to prevent counter underflow. The IWDT provides functionality to reset the MCU or to generate a non-maskable interrupt/interrupt for a timer underflow. Because the timer operates with an independent, dedicated clock source, it is particularly useful in returning the MCU to a known state as a fail safe mechanism when the system runs out of control. The watchdog timer can be triggered automatically on reset, underflow, or refresh error, or by a refresh of the count value in the registers. See section 23, Independent Watchdog Timer (IWDT) in User's Manual.

Table 1.4 Event Link

Feature	Functional description
Event Link Controller (ELC)	The Event Link Controller (ELC) uses the interrupt requests generated by various peripheral modules as event signals to connect them to different modules, enabling direct interaction between the modules without CPU intervention. See section 15, Event Link Controller (ELC) in User's Manual.

Table 1.5 Direct memory access

Feature	Functional description
Data Transfer Controller (DTC)	The MCU incorporates a Data Transfer Controller (DTC) that performs data transfers when activated by an interrupt request. See section 14, Data Transfer Controller (DTC) in User's Manual.

Table 1.6 Timers

Feature	Functional description
General PWM Timer (GPT)	The General PWM Timer (GPT) is a 32-bit timer with 1 channel and a 16-bit timer with 6 channels. PWM waveforms can be generated by controlling the up-counter, down-counter, or the up- and down-counter. In addition, PWM waveforms for controlling brushless DC motors can be generated. The GPT can also be used as a general-purpose timer. See section 19, General PWM Timer (GPT) in User's Manual.
Port Output Enable for GPT (POEG)	Use the Port Output Enable for GPT (POEG) function to place the General PWM Timer (GPT) output pins in the output disable state. See section 18, Port Output Enable for GPT (POEG) in User's Manual.
Asynchronous General Purpose Timer (AGT)	The Asynchronous General Purpose Timer (AGT) is a 16-bit timer that can be used for pulse output, external pulse width or period measurement, and counting external events. This 16-bit timer consists of a reload register and a down-counter. The reload register and the down-counter are allocated to the same address, and they can be accessed with the AGT register. See section 20, Asynchronous General Purpose Timer (AGT) in User's Manual.
Realtime Clock (RTC)	The Realtime Clock (RTC) has two counting modes, calendar count mode and binary count mode, that are used by switching register settings. For calendar count mode, the RTC has a 100-year calendar from 2000 to 2099 and automatically adjusts dates for leap years. For binary count mode, the RTC counts seconds and retains the information as a serial value. Binary count mode can be used for calendars other than the Gregorian (Western) calendar. See section 21, Realtime Clock (RTC) in User's Manual.

Table 1.7 Communication interfaces (1 of 2)

Feature	Functional description
Serial Communications Interface (SCI)	The Serial Communication Interface (SCI) is configurable to five asynchronous and synchronous serial interfaces: • Asynchronous interfaces (UART and asynchronous communications interface adapter (ACIA)) • 8-bit clock synchronous interface • Simple IIC (master-only) • Simple SPI • Smart card interface The smart card interface complies with the ISO/IEC 7816-3 standard for electronic signals and transmission protocol. SCI0 has FIFO buffers to enable continuous and full-duplex communication, and the data transfer speed can be configured independently using an on-chip baud rate generator. See section 25, Serial Communications Interface (SCI) in User's Manual.
I^2C Bus interface (IIC)	The MCU has a two-channel I^2C bus interface (IIC). The IIC module conforms with and provides a subset of the NXP I^2C bus (Inter-Integrated Circuit bus) interface functions. See section 26, I2C Bus Interface (IIC) in User's Manual.
Serial Peripheral Interface (SPI)	The MCU includes two independent channels of the Serial Peripheral Interface (SPI). The SPI channels are capable of high-speed, full-duplex synchronous serial communications with multiple processors and peripheral devices. See section 28, Serial Peripheral Interface (SPI) in User's Manual.
Controller Area Network (CAN) Module	The Controller Area Network (CAN) module provides functionality to receive and transmit data using a message-based protocol between multiple slaves and masters in electromagnetically noisy applications. The CAN module complies with the ISO 11898-1 (CAN 2.0A/CAN 2.0B) standard and supports up to 32 mailboxes, which can be configured for transmission or reception in normal mailbox and FIFO modes. Both standard (11-bit) and extended (29-bit) messaging formats are supported. See section 27, Controller Area Network (CAN) Module in User's Manual.

Table 1.7 Communication interfaces (2 of 2)

Feature	Functional description
USB 2.0 Full-Speed Module (USBFS)	The MCU incorporates a USB 2.0 Full-Speed module (USBFS). The USBFS is a USB controller that is equipped to operate as a device controller. The module supports full-speed and low-speed transfer as defined in the Universal Serial Bus Specification 2.0. The module has an internal USB transceiver and supports all of the transfer types defined in the Universal Serial Bus Specification 2.0. The USB has buffer memory for data transfer, providing a maximum of 5 pipes. PIPE0 and PIPE4 to PIPE7 can be assigned any endpoint number based on the peripheral devices used for communication or based on the user system. The MCU supports revision 1.2 of the battery charging specification. Because the MCU can be powered at 5 V, the USB LDO regulator provides the internal USB transceiver power supply 3.3 V. See section 24, USB 2.0 Full-Speed Module (USBFS) in User's Manual.

Table 1.8 Analog

Feature	Functional description
14-bit A/D Converter (ADC14)	The MCU incorporates up to one unit of a 14-bit successive approximation A/D converter. Up to 18 analog input channels are selectable. Temperature sensor output and internal reference voltage are selectable for conversion. The A/D conversion accuracy is selectable from 12-bit and 14-bit conversion making it possible to optimize the tradeoff between speed and resolution in generating a digital value. See section 30, 14-Bit A/D Converter (ADC14) in User's Manual.
12-bit D/A Converter (DAC12)	The MCU includes a 12-bit D/A converter with an output amplifier. See section 31, 12-Bit D/A Converter (DAC12) in User's Manual.
Temperature Sensor (TSN)	The on-chip Temperature Sensor can be used to determine and monitor the die temperature for reliable operation of the device. The sensor outputs a voltage directly proportional to the die temperature, and the relationship between the die temperature and the output voltage is linear. The output voltage is provided to the ADC14 for conversion and can be further used by the end application. See section 32, Temperature Sensor (TSN) in User's Manual.
Low-Power Analog Comparator (ACMPLP)	Analog comparators can be used to compare a reference input voltage and analog input voltage. The comparison result can be read by software and also be output externally. The reference input voltage can be selected from either an input to the CMPREFi (i = 0, 1) pin or from the internal reference voltage (Vref) generated internally in the MCU. The ACMPLP response speed can be set before starting an operation. Setting high-speed mode decreases the response delay time, but increases current consumption. Setting low-speed mode increases the response delay time, but decreases current consumption. See section 33, Low-Power Analog Comparator (ACMPLP) in User's Manual.

Table 1.9 Human machine interfaces

Feature	Functional description
Capacitive Touch Sensing Unit (CTSU)	The Capacitive Touch Sensing Unit (CTSU) measures the electrostatic capacitance of the touch sensor. Changes in the electrostatic capacitance are determined by software, which enables the CTSU to detect whether a finger is in contact with the touch sensor. The electrode surface of the touch sensor is usually enclosed with an electrical insulator so that a finger does not come into direct contact with the electrode. See section 34, Capacitive Touch Sensing Unit (CTSU) in User's Manual.

Table 1.10 Data processing

Feature	Functional description
Cyclic Redundancy Check (CRC) Calculator	The Cyclic Redundancy Check (CRC) calculator generates CRC codes to detect errors in the data. The bit order of CRC calculation results can be switched for LSB first or MSB first communication. Additionally, various CRC generation polynomials are available. The snoop function allows monitoring reads from and writes to specific addresses. This function is useful in applications that require CRC code to be generated automatically in certain events, such as monitoring writes to the serial transmit buffer and reads from the serial receive buffer. See section 29, Cyclic Redundancy Check (CRC) Calculator in User's Manual.
Data Operation Circuit (DOC)	The Data Operation Circuit (DOC) is used to compare, add, and subtract 16-bit data. See section 35, Data Operation Circuit (DOC) in User's Manual.

Table 1.11 Security

Feature	Functional description
AES	See section 38, AES Engine in User's Manual
True Random Number Generator (TRNG)	See section 39, True Random Number Generator (TRNG) in User's Manual

1.2 Block Diagram

Figure 1.1 shows the block diagram of the MCU superset. Individual devices within the group may have a subset of the features.

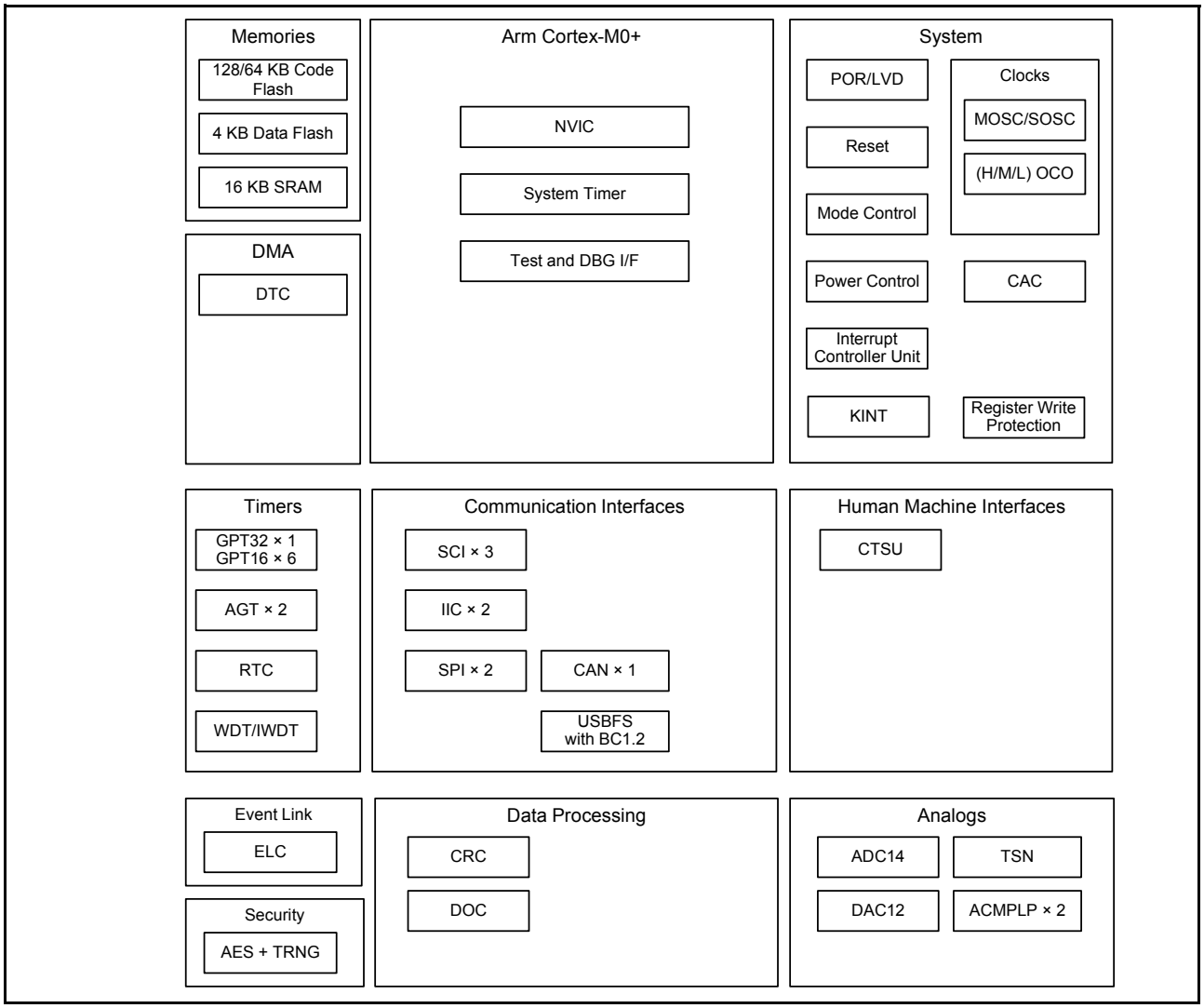

Figure 1.1 Block diagram

1.3 Part Numbering

Figure 1.2 shows how to read the product part number, memory capacity, and package types. Table 1.12 shows a list of products.

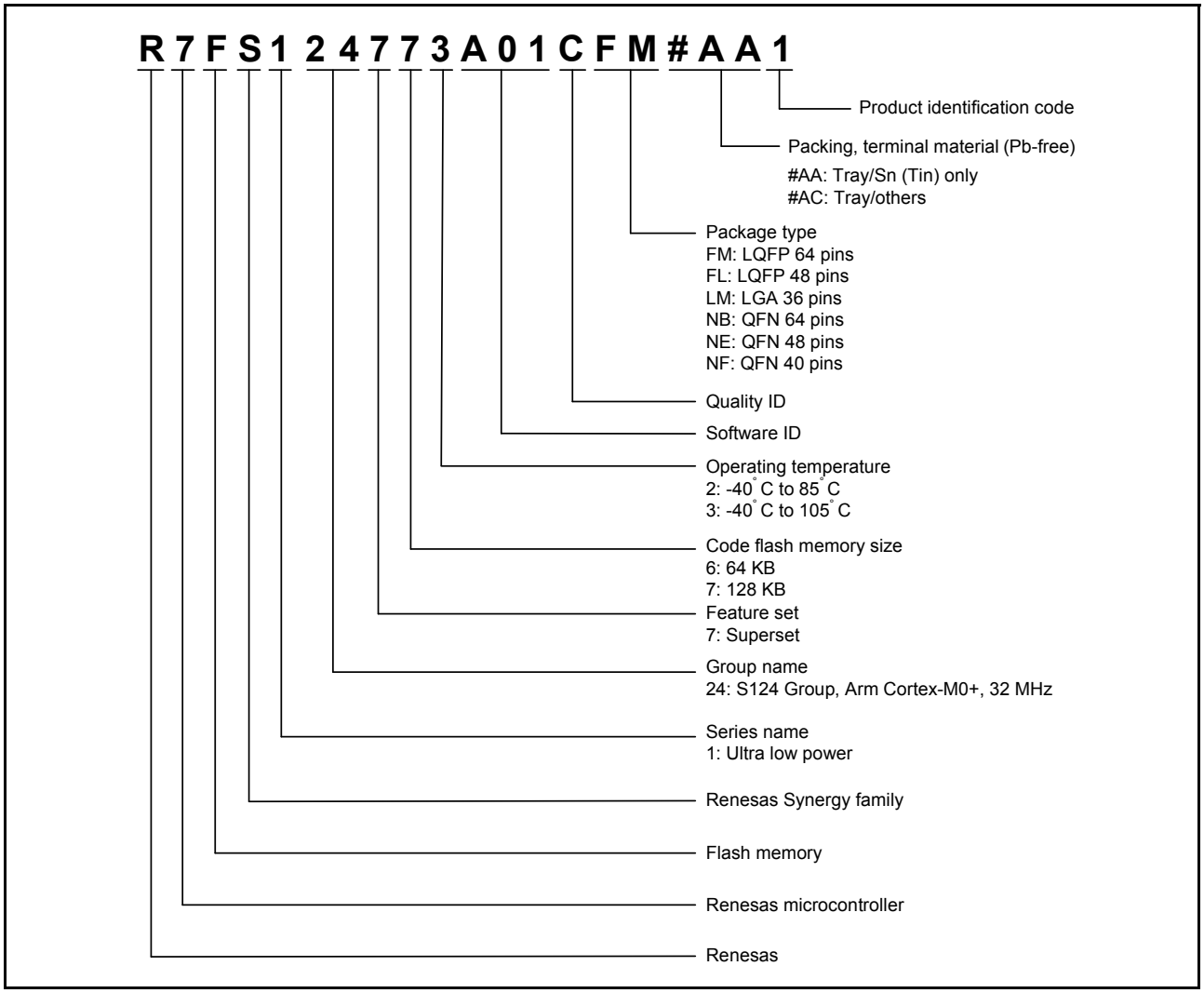

Figure 1.2 Part numbering scheme

Table 1.12 Product list

Product part number	Orderable part number	Package code	Code flash	Data flash	SRAM	Operating temperature
R7FS124773A01CFM	R7FS124773A01CFM#AA1	PLQP0064KB-C	128 KB	4 KB	16 KB	–40 to +105°C
R7FS124773A01CNB	R7FS124773A01CNB#AC1	PWQN0064LA-A				–40 to +105°C
R7FS124773A01CFL	R7FS124773A01CFL#AA1	PLQP0048KB-B				–40 to +105°C
R7FS124773A01CNE	R7FS124773A01CNE#AC1	PWQN0048KB-A				–40 to +105°C
R7FS124773A01CNF	R7FS124773A01CNF#AC1	PWQN0040KC-A				–40 to +105°C
R7FS124772A01CLM	R7FS124772A01CLM#AC1	PWLG0036KA-A				–40 to +85°C
R7FS124763A01CFM	R7FS124763A01CFM#AA1	PLQP0064KB-C	64 KB			–40 to +105°C
R7FS124763A01CFL	R7FS124763A01CFL#AA1	PLQP0048KB-B				–40 to +105°C
R7FS124762A01CLM	R7FS124762A01CLM#AC1	PWLG0036KA-A				–40 to +85°C

Note: Earlier products with orderable part number suffix AA0 and AC0 have a restriction in AES functions. If AES functions are required for your application, refer to the products with orderable part number suffix AA1 or AC1. For details on the differences of AES functions between AA0/AC0 and AA1/AC1 products, see *Technical Update (TN-SY*-A024A/E)*. Contact your Renesas sales representative for additional information.

1.4 Function Comparison

Table 1.13 Function comparison

Parts number		R7FS124773A01CFM/ R7FS124763A01CFM/ R7FS124773A01CNB/	R7FS124773A01CFL/ R7FS124763A01CFL/ R7FS124773A01CNE	R7FS124773A01CNF	R7FS124772A01CLM/ R7FS124762A01CLM
Pin count		64	48	40	36
Package		LQFP/QFN	LQFP/QFN	QFN	LGA
Code flash memory		128/64 KB			
Data flash memory		4 KB			
SRAM		16 KB			
	Parity	4 KB			
System	CPU clock	32 MHz			
	ICU	Yes			
	KINT	8	5	5	4
Event link	ELC	Yes			
DMA	DTC	Yes			
Timers	GPT32	1			
	GPT16	6	6	4	4
	AGT	2	2	2	2
	RTC	Yes			
	WDT/IWDT	Yes			
Communication	SCI	3			
	IIC	2			
	SPI	2			
	CAN	Yes			
	USBFS	Yes			
Analog	ADC14	18	14	12	11
	DAC12	1			
	ACMPLP	2			
	TSN	Yes			
HMI	CTSU	31	23	17	13
	KINT	8	5	5	4
Data processing	CRC	Yes			
	DOC	Yes			
Security		AES and TRNG			

1.5 Pin Functions

Table 1.14 Pin functions (1 of 3)

Function	Signal	I/O	Description
Power supply	VCC	Input	Power supply pin. Connect it to the system power supply. Connect this pin to VSS by a 0.1-μF capacitor. The capacitor should be placed close to the pin.
	VCL	Input	Connect this pin to the VSS pin by the smoothing capacitor used to stabilize the internal power supply. Place the capacitor close to the pin.
	VSS	Input	Ground pin. Connect it to the system power supply (0 V).
Clock	XTAL	Output	Pins for a crystal resonator. An external clock signal can be input through the EXTAL pin.
	EXTAL	Input	
	XCIN	Input	Input/output pins for the sub-clock oscillator. Connect a crystal resonator between XCOUT and XCIN.
	XCOUT	Output	
	CLKOUT	Output	Clock output pin.
Operating mode control	MD	Input	Pins for setting the operating mode. The signal levels on these pins must not be changed during operation mode transition at the time of release from the reset state.
System control	RES	Input	Reset signal input pin. The MCU enters the reset state when this signal goes low.
CAC	CACREF	Input	Measurement reference clock input pin.
On-chip debug	SWDIO	I/O	Serial Wire debug Data Input/Output pin.
	SWCLK	Input	Serial Wire Clock pin.
Interrupt	NMI	Input	Non-maskable interrupt request pin.
	IRQ0 to IRQ7	Input	Maskable interrupt request pins.
GPT	GTETRGA, GTETRGB	Input	External trigger input pin.
	GTIOC0A to GTIOC6A, GTIOC0B to GTIOC6B	I/O	Input capture, Output Compare, or PWM output pin.
	GTIU	Input	Hall sensor input pin U.
	GTIV	Input	Hall sensor input pin V.
	GTIW	Input	Hall sensor input pin W.
	GTOUUP	Output	Three-phase PWM output for BLDC motor control (positive U phase).
	GTOULO	Output	Three-phase PWM output for BLDC motor control (negative U phase).
	GTOVUP	Output	Three-phase PWM output for BLDC motor control (positive V phase).
	GTOVLO	Output	Three-phase PWM output for BLDC motor control (negative V phase).
	GTOWUP	Output	Three-phase PWM output for BLDC motor control (positive W phase).
	GTOWLO	Output	Three-phase PWM output for BLDC motor control (negative W phase).
AGT	AGTEE0, AGTEE1	Input	External event input enable.
	AGTIO0, AGTIO1	I/O	External event input and pulse output.
	AGTO0, AGTO1	Output	Pulse output.
	AGTOA0, AGTOA1	Output	Output compare match A output.
	AGTOB0, AGTOB1	Output	Output compare match B output.
RTC	RTCOUT	Output	Output pin for 1-Hz/64-Hz clock.

Table 1.14 Pin functions (2 of 3)

Function	Signal	I/O	Description
SCI	SCK0, SCK1, SCK9	I/O	Input/output pins for the clock (clock synchronous mode).
	RXD0, RXD1, RXD9	Input	Input pins for received data (asynchronous mode/clock synchronous mode).
	TXD0, TXD1, TXD9	Output	Output pins for transmitted data (asynchronous mode/clock synchronous mode).
	CTS0_RTS0, CTS1_RTS1, CTS9_RTS9	I/O	Input/Output pins for controlling the start of transmission and reception (asynchronous mode/clock synchronous mode), active-low.
	SCL0, SCL1, SCL9	I/O	Input/output pins for the IIC clock (simple IIC).
	SDA0, SDA1, SDA9	I/O	Input/output pins for the IIC data (simple IIC).
	SCK0, SCK1, SCK9	I/O	Input/output pins for the clock (simple SPI).
	MISO0, MISO1, MISO9	I/O	Input/output pins for slave transmission of data (simple SPI).
	MOSI0, MOSI1, MOSI9	I/O	Input/output pins for master transmission of data (simple SPI).
	SS0, SS1, SS9	Input	Chip-select input pins (simple SPI), active-low.
IIC	SCL0, SCL1	I/O	Input/output pins for clock.
	SDA0, SDA1	I/O	Input/output pins for data.
SPI	RSPCKA, RSPCKB	I/O	Clock input/output pin.
	MOSIA, MOSIB	I/O	Inputs or outputs data output from the master.
	MISOA, MISOB	I/O	Inputs or outputs data output from the slave.
	SSLA0, SSLB0	I/O	Input or output pin for slave selection.
	SSLA1 to SSLA3, SSLB1 to SSLB3	Output	Output pin for slave selection.
CAN	CRX0	Input	Receive data.
	CTX0	Output	Transmit data.
USBFS	VSS_USB	Input	Ground pins.
	VCC_USB_LDO	Input	Power supply pin for USB LDO regulator.
	VCC_USB	I/O	Input: Power supply pin for USB transceiver. Output: USB LDO regulator output pin. This pin should be connected to an external capacitor.
	USB_DP	I/O	D+ I/O pin of the USB on-chip transceiver. This pin should be connected to the D+ pin of the USB bus.
	USB_DM	I/O	D– I/O pin of the USB on-chip transceiver. This pin should be connected to the D– pin of the USB bus.
	USB_VBUS	Input	USB cable connection monitor pin. This pin should be connected to VBUS of the USB bus. The VBUS pin status (connected or disconnected) can be detected when the USB module is operating as a function controller.
Analog power supply	AVCC0	Input	Analog block power supply pin
	AVSS0	Input	Analog block power supply ground pin
	VREFH0	Input	Reference power supply pin
	VREFL0	Input	Reference power supply ground pin
ADC14	AN000 to AN010, AN016 to AN022	Input	Input pins for the analog signals to be processed by the A/D converter.
	ADTRG0	Input	Input pins for the external trigger signals that start the A/D conversion, active-low.
DAC12	DA0	Output	Output pins for the analog signals to be processed by the D/A converter.

Table 1.14 Pin functions (3 of 3)

Function	Signal	I/O	Description
ACMPLP	VCOUT	Output	Comparator output pin.
	CMPREF0, CMPREF1	Input	Reference voltage input pins.
	CMPIN0, CMPIN1	Input	Analog voltage input pins.
CTSU	TS00 to TS28, TS30, TS31	Input	Capacitive touch detection pins (touch pins).
	TSCAP	-	Secondary power supply pin for the touch driver.
KINT	KR00 to KR07	Input	Key interrupt input pins.
I/O ports	P000 to P004, P010 to P015	I/O	General-purpose input/output pins.
	P100 to P113	I/O	General-purpose input/output pins.
	P200	Input	General-purpose input pin.
	P201, P204 to P206, P212, P213	I/O	General-purpose input/output pins.
	P214, P215	Input	General-purpose input pins.
	P300 to P304	I/O	General-purpose input/output pins.
	P400 to P403, P407 to P411	I/O	General-purpose input/output pins.
	P500 to P502	I/O	General-purpose input/output pins.

1.6 Pin Assignments

Figure 1.3 to Figure 1.8 show the pin assignments.

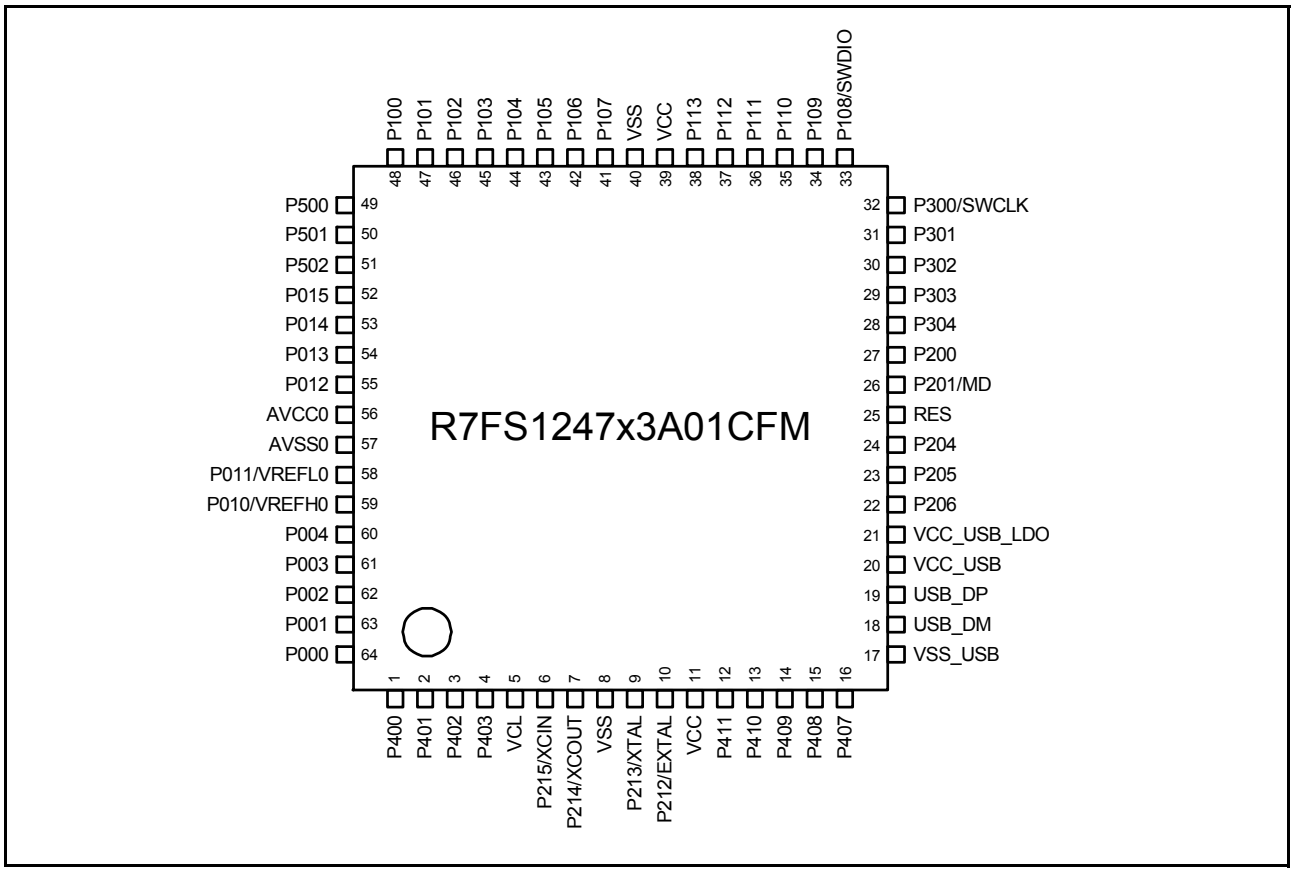

Figure 1.3 Pin assignment for LQFP 64-pin (top view)

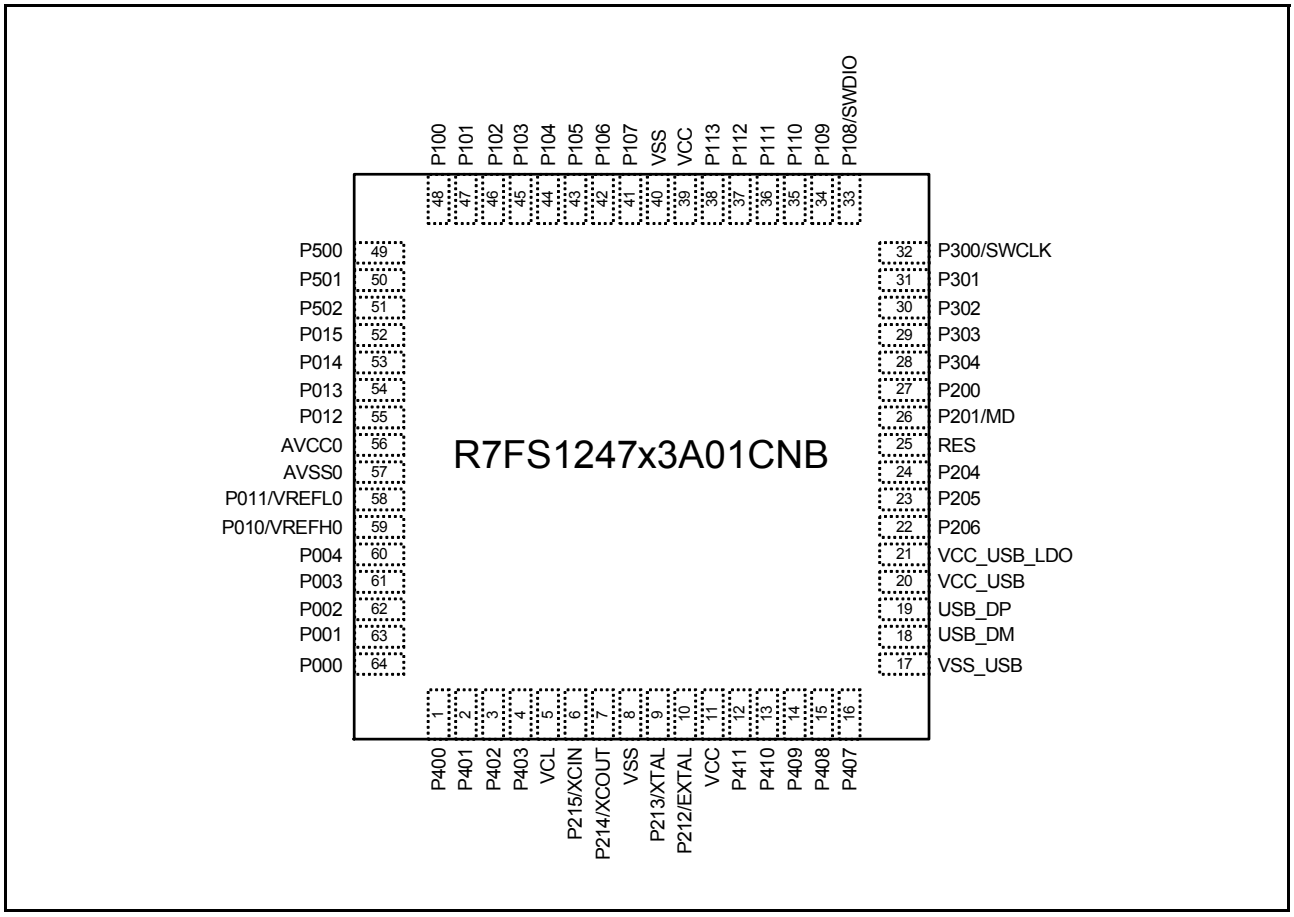

Figure 1.4 Pin assignment for QFN 64-pin (top view)

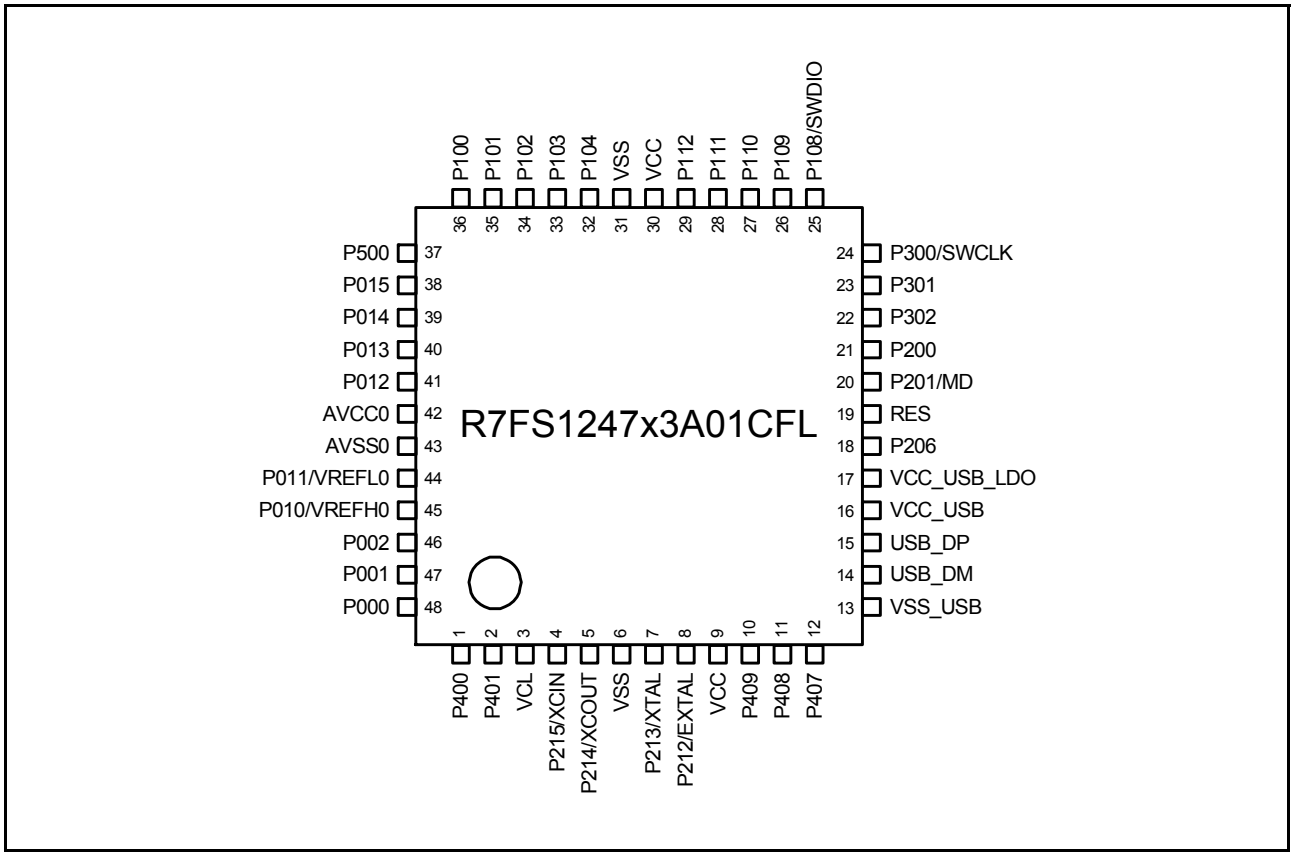

Figure 1.5 Pin assignment for LQFP 48-pin (top view)

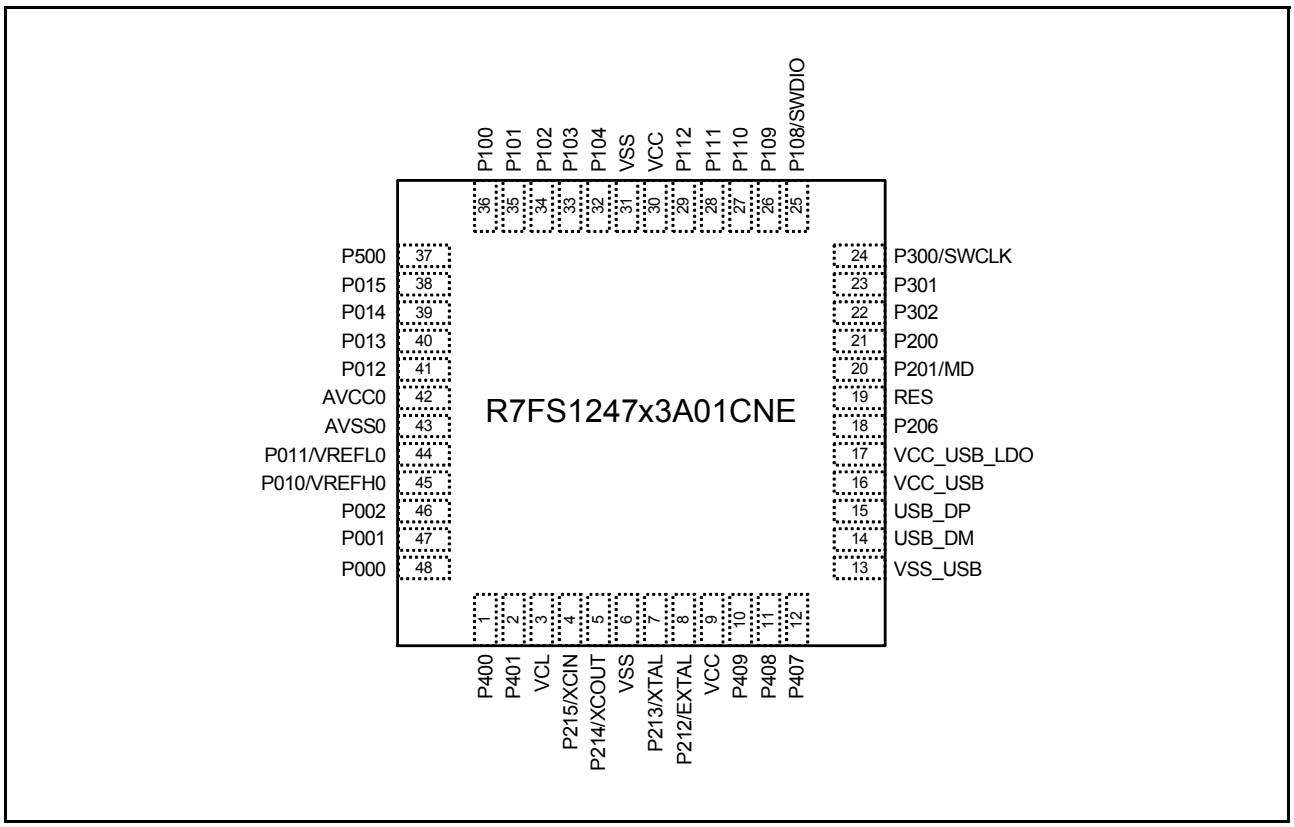

Figure 1.6 Pin assignment for QFN 48-pin (top view)

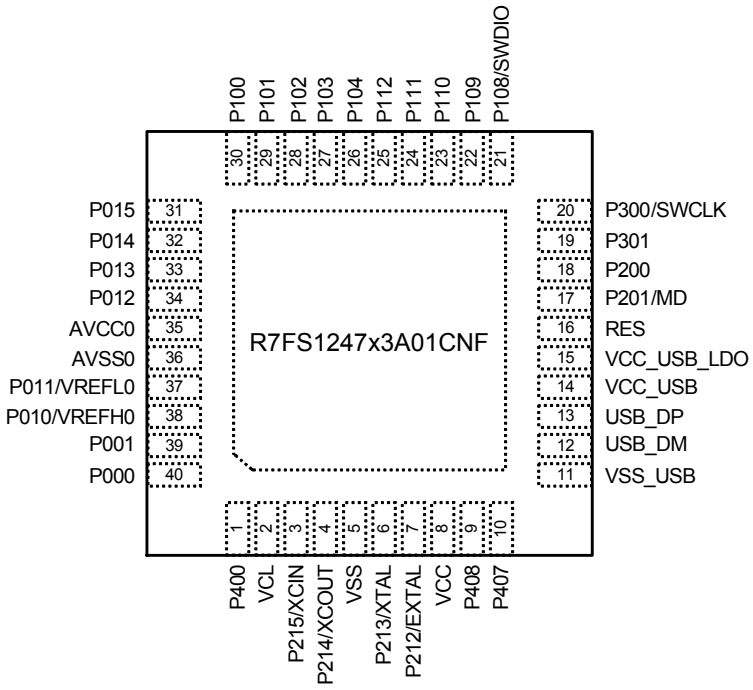

Figure 1.7 Pin assignment for QFN 40-pin (top view)

R7FS1247x2A01CLM

	A	B	C	D	E	F	
6	P015	P100	P112	P111	P108 /SWDIO	P300 /SWCLK	6
5	P014	P013	P101	P110	P200	VCC_USB _LDO	5
4	AVCC0	P012	P102	P109	P201/MD	VCC_USB	4
3	AVSS0	P011 /VREFL0	P103	P213 /XTAL	RES	USB_DP	3
2	P010 /VREFH0	P000	P400	P212 /EXTAL	P407	USB_DM	2
1	VCL	P215 /XCIN	P214 /XCOUT	VSS	VCC	VSS_USB	1
	A	B	C	D	E	F	

Figure 1.8 Pin assignment for LGA 36-pin (top view, pad side down)

1.7 Pin Lists

Pin number							Timers				Communication Interfaces				Analogs		HMI	
LQFP64, QFN64	LQFP48	QFN48	QFN40	LGA36	Power, System, Clock, Debug, CAC	I/O ports	AGT	GPT_OPS, POEG	GPT	RTC	USBFS,CAN	SCI	IIC	SPI	ADC14	DAC12, ACMPLP	CTSU	Interrupt
1	1	1	1	C2	CACREF_C	P400	AGTIO1_D		GTIOC6A_A			SCK0_B/SCK1_B	SCL0_A				TS20	IRQ0
2	2	2	-	-		P401		GTETRGA_B	GTIOC6B_A		CTX0_B	CTS0_RTS0_B/SS0_B/TXD1_B/MOSI1_B/SDA1_B	SDA0_A				TS19	IRQ5
3	-	-	-	-		P402					CRX0_B	RXD1_B/MISO1_B/SCL1_B					TS18	IRQ4
4	-	-	-	-		P403			GTIOC3A_B			CTS1_RTS1_B/SS1_B					TS17	
5	3	3	2	A1	VCL													
6	4	4	3	B1	XCIN	P215												
7	5	5	4	C1	XCOUT	P214												
8	6	6	5	D1	VSS													
9	7	7	6	D3	XTAL	P213		GTETRGA_D				TXD1_A/MOSI1_A/SDA1_A						IRQ2
10	8	8	7	D2	EXTAL	P212	AGTEE1	GTETRGB_D				RXD1_A/MISO1_A/SCL1_A						IRQ3
11	9	9	8	E1	VCC													
12	-	-	-	-		P411	AGTOA1	GTOVUP_B	GTIOC6A_B			TXD0_B/MOSI0_B/SDA0_B		MOSIA_B			TS07	IRQ4
13	-	-	-	-		P410	AGTOB1	GTOVLO_B	GTIOC6B_B			RXD0_B/MISO0_B/SCL0_B		MISOA_B			TS06	IRQ5
14	10	10	-	-		P409		GTOWUP_B	GTIOC5A_B			TXD9_A/MOSI9_A/SDA9_A					TS05	IRQ6
15	11	11	9	-		P408		GTOWLO_B	GTIOC5B_B			RXD9_A/MISO9_A/SCL9_A					TS04	IRQ7
16	12	12	10	E2		P407				RTCOUT	USB_VBUS	CTS0_RTS0_D/SS0_D	SDA0_B	SSLB3_A	ADTRG0_B		TS03	
17	13	13	11	F1	VSS_USB													
18	14	14	12	F2							USB_DM							
19	15	15	13	F3							USB_DP							
20	16	16	14	F4	VCC_USB													
21	17	17	15	F5	VCC_USB_LDO													
22	18	18	-	-		P206		GTIU_A				RXD0_D/MISO0_D/SCL0_D	SDA1_A	SSLB1_A			TS01	IRQ0
23	-	-	-	-	CLKOUT_A	P205	AGTO1	GTIV_A	GTIOC4A_B			TXD0_D/MOSI0_D/SDA0_D/CTS9_RTS9_A/SS9_A	SCL1_A	SSLB0_A			TSCAP_A	IRQ1
24	-	-	-	-	CACREF_A	P204	AGTIO1_A	GTIW_A	GTIOC4B_B			SCK0_D/SCK9_A	SCL0_B	RSPCKB_A			TS00	
25	19	19	16	E3	RES													
26	20	20	17	E4	MD	P201												
27	21	21	18	E5		P200												NMI
28	-	-	-	-		P304			GTIOC1A_B									
29	-	-	-	-		P303			GTIOC1B_B								TS02	
30	22	22	-	-		P302		GTOUUP_A	GTIOC4A_A					SSLB3_B			TS08	IRQ5
31	23	23	19	-		P301		GTOULO_A	GTIOC4B_A					SSLB2_B			TS09	IRQ6
32	24	24	20	F6	SWCLK	P300		GTOUUP_C	GTIOC0A_A					SSLB1_B				
33	25	25	21	E6	SWDIO	P108		GTOULO_C	GTIOC0B_A			CTS9_RTS9_B/SS9_B		SSLB0_B				
34	26	26	22	D4	CLKOUT_B	P109		GTOVUP_A	GTIOC1A_A		CTX0_A	TXD9_B/MOSI9_B/SDA9_B		MOSIB_B			TS10	

Pin number							Timers				Communication Interfaces				Analogs		HMI	
LQFP64, QFN64	LQFP48	QFN48	QFN40	LGA36	Power, System, Clock, Debug, CAC	I/O ports	AGT	GPT_OPS, POEG	GPT	RTC	USBFS,CAN	SCI	IIC	SPI	ADC14	DAC12, ACMPLP	CTSU	Interrupt
35	27	27	23	D5		P110		GTOVLO_A	GTIOC1B_A		CRX0_A	CTS0_RTS0_C/SS0_C/RXD9_B/MISO9_B/SCL9_B		MISOB_B		VCOUT	TS11	IRQ3
36	28	28	24	D6		P111			GTIOC3A_A			SCK0_C/SCK9_B		RSPCKB_B			TS12	IRQ4
37	29	29	25	C6		P112			GTIOC3B_A			TXD0_C/MOSI0_C/SDA0_C					TSCAP_C	
38	-	-	-	-		P113												
39	30	30	-	-	VCC													
40	31	31	-	-	VSS													
41	-	-	-	-		P107			GTIOC0A_B									KR07
42	-	-	-	-		P106			GTIOC0B_B					SSLA3_A				KR06
43	-	-	-	-		P105		GTETRGA_C						SSLA2_A				KR05/IRQ0
44	32	32	26	-		P104		GTETRGB_B				RXD0_C/MISO0_C/SCL0_C		SSLA1_A			TS13	KR04/IRQ1
45	33	33	27	C3		P103		GTOWUP_A	GTIOC2A_A		CTX0_C	CTS0_RTS0_A/SS0_A		SSLA0_A	AN019	CMPREF1	TS14	KR03
46	34	34	28	C4		P102	AGTO0	GTOWLO_A	GTIOC2B_A		CRX0_C	SCK0_A		RSPCKA_A	AN020/ADTRG0_A	CMPIN1	TS15	KR02
47	35	35	29	C5		P101	AGTEE0	GTETRGB_A	GTIOC5A_A			TXD0_A/MOSI0_A/SDA0_A/CTS1_RTS1_A/SS1_A	SDA1_B	MOSIA_A	AN021	CMPREF0	TS16	KR01/IRQ1
48	36	36	30	B6		P100	AGTIO0_A	GTETRGA_A	GTIOC5B_A			RXD0_A/MISO0_A/SCL0_A/SCK1_A	SCL1_B	MISOA_A	AN022	CMPIN0	TS26	KR00/IRQ2
49	37	37	-	-		P500	AGTOA0	GTIU_B	GTIOC2A_B						AN016		TS27	
50	-	-	-	-		P501	AGTOB0	GTIV_B	GTIOC2B_B						AN017			
51	-	-	-	-		P502		GTIW_B	GTIOC3B_B						AN018			
52	38	38	31	A6		P015									AN010		TS28	IRQ7
53	39	39	32	A5		P014									AN009	DA0		
54	40	40	33	B5		P013									AN008			
55	41	41	34	B4		P012									AN007			
56	42	42	35	A4	AVCC0													
57	43	43	36	A3	AVSS0													
58	44	44	37	B3	VREFL0	P011									AN006		TS31	
59	45	45	38	A2	VREFH0	P010									AN005		TS30	
60	-	-	-	-		P004									AN004		TS25	IRQ3
61	-	-	-	-		P003									AN003		TS24	
62	46	46	-	-		P002									AN002		TS23	IRQ2
63	47	47	39	-		P001									AN001		TS22	IRQ7
64	48	48	40	B2		P000									AN000		TS21	IRQ6

Note: Several pin names have the added suffix of _A, _B, _C, and _D. The suffix can be ignored when assigning functionality.

2. Electrical Characteristics

Unless otherwise specified, the electrical characteristics of the MCU are defined under the following conditions:

VCC*1 = AVCC0 = VCC_USB*2 = VCC_USB_LDO*2 = 1.6 to 5.5V, VREFH0 = 1.6 to AVCC0,

VSS = AVSS0 = VREFL0 = VSS_USB = 0 V, Ta = T_{opr}

Note 1. The typical condition is set to VCC = 3.3V.
Note 2. When USBFS is not used.

Figure 2.1 shows the timing conditions.

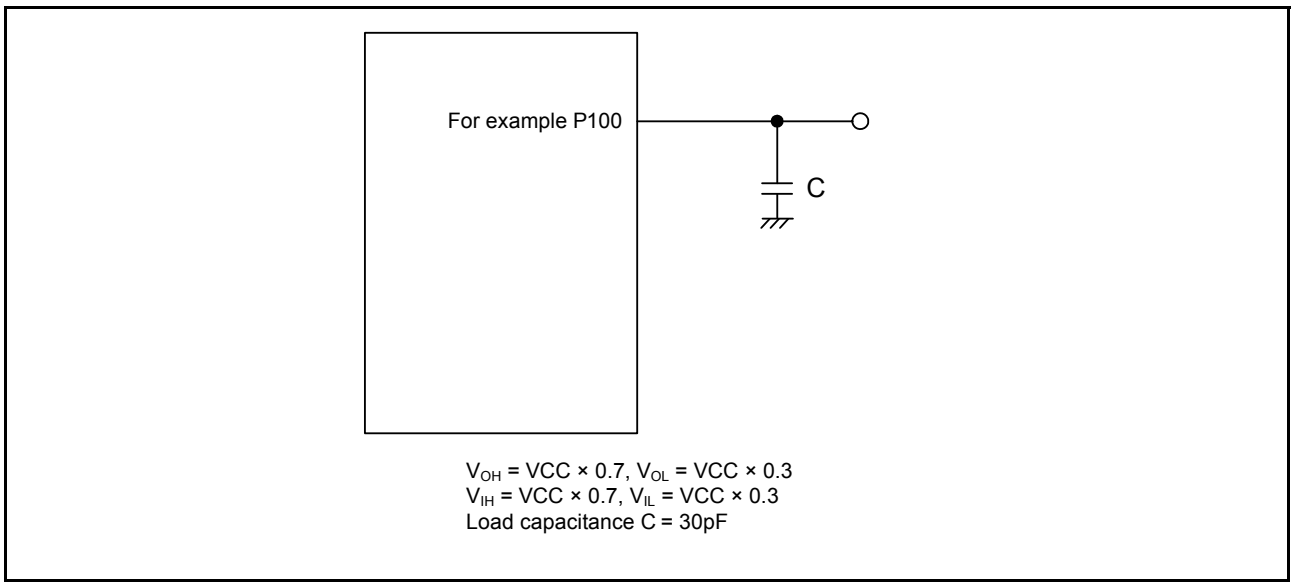

Figure 2.1 Input or output timing measurement conditions

The measurement conditions of timing specification in each peripherals are recommended for the best peripheral operation. However, make sure to adjust driving abilities of each pins to meet your conditions.

Each function pin used for the same function must select the same drive ability. If I/O drive ability of each function is mixed, the AC specification of the function is not guaranteed.

2.1 Absolute Maximum Ratings

Table 2.1 Absolute maximum ratings

Parameter		Symbol	Value	Unit
Power supply voltage		VCC	–0.5 to +6.5	V
Input voltage	5V-tolerant ports*1	V_{in}	–0.3 to +6.5	V
	P000 to P004 P010 to P015	V_{in}	–0.3 to AVCC0 + 0.3	V
	Others	V_{in}	–0.3 to VCC + 0.3	V
Reference power supply voltage		VREFH0	–0.3 to +6.5	V
Analog power supply voltage		AVCC0	–0.5 to +6.5	V
USB power supply voltage		VCC_USB	–0.5 to +6.5	V
		VCC_USB_LDO	–0.5 to +6.5	V
Analog input voltage	When AN000 to AN010 are used	V_{AN}	–0.3 to AVCC0 + 0.3	V
	When AN016 to AN022 are used		–0.3 to VCC + 0.3	V
Operating temperature*2 *3		T_{opr}	–40 to +85 –40 to +105	°C
Storage temperature		T_{stg}	–55 to +125	°C

Note: See the Total Operating Time (TOT) Utility located at http://www.renesas.com. This utility is provided for educational and evaluation purposes only and is subject to the accompanying disclaimer.

Note 1. Ports P205, P206, P400, P401, and P407 are 5V-tolerant.
Do not input signals or an I/O pull-up power supply while the device is not powered. The current injection that results from input of such a signal or I/O pull-up might cause malfunction and the abnormal current that passes in the device at this time might cause degradation of internal elements.

Note 2. See section 2.2.1, Tj/Ta Definition.

Note 3. The upper limit of the operating temperature is 85°C or 105°C, depending on the product. For details, see section 1, Part Numbering

Caution: Permanent damage to the MCU may result if absolute maximum ratings are exceeded.
To preclude any malfunctions due to noise interference, insert capacitors of high frequency characteristics between the VCC and VSS pins, between the AVCC0 and AVSS0 pins, between the VCC_USB and VSS_USB pins, and between the VREFH0 and VREFL0 pins. Place capacitors of about 0.1 µF as close as possible to every power supply pin and use the shortest and heaviest possible traces. Also, connect capacitors as stabilization capacitance.
Connect the VCL pin to a VSS pin by a 4.7-µF capacitor. The capacitor must be placed close to the pin.

Table 2.2 Recommended operating conditions

Parameter	Symbol	Value	Min	Typ	Max	Unit
Power supply voltages	VCC*1, *2	When USBFS is not used	1.6	-	5.5	V
		When USBFS is used USB Regulator Disable	VCC_USB	-	3.6	V
		When USBFS is used USB Regulator Enable	VCC_USB _LDO	-	5.5	V
	VSS		-	0	-	V
USB power supply voltages	VCC_USB	When USBFS is not used	-	VCC	-	V
		When USBFS is used USB Regulator Disable (Input)	3.0	3.3	3.6	V
	VCC_USB_LDO	When USBFS is not used	-	VCC	-	V
		When USBFS is used USB Regulator Enable	3.8	-	5.5	V
		When USBFS is used USB Regulator Disable	-	VCC	-	V
	VSS_USB		-	0	-	V
Analog power supply voltages	AVCC0*1, *2		1.6	-	5.5	V
	AVSS0		-	0	-	V
	VREFH0	When used as ADC14 Reference	1.6	-	AVCC0	V
	VREFL0		-	0	-	V

Note 1. Use AVCC0 and VCC under the following conditions:
AVCC0 and VCC can be set individually within the operating range when VCC ≥ 2.2 V and AVCC0 ≥ 2.2 V
AVCC0 = VCC when VCC < 2.2 V or AVCC0 < 2.2 V.

Note 2. When powering on the VCC and AVCC0 pins, power them on at the same time or the VCC pin first and then the AVCC0 pin.

2.2 DC Characteristics

2.2.1 Tj/Ta Definition

Table 2.3 DC characteristics
Conditions: Products with operating temperature (T_a) –40 to +105°C

Parameter	Symbol	Typ	Max	Unit	Test conditions
Permissible junction temperature	Tj	-	125	°C	High-speed mode Middle-speed mode Low-voltage mode Low-speed mode Subosc-speed mode
			105*1		

Note: Make sure that Tj = T_a + θja × total power consumption (W), where total power consumption = (VCC – V_{OH}) × ΣI_{OH} + V_{OL} × ΣI_{OL} + I_{CC}max × VCC.

Note 1. The upper limit of operating temperature is 85°C or 105°C, depending on the product. For details, see section 1.3, Part Numbering. If the part number shows the operation temperature at 85°C, then the maximum value of Tj is 105°C, otherwise, it is 125°C.

2.2.2 I/O V_{IH}, V_{IL}

Table 2.4 I/O V_{IH}, V_{IL} (1)
Conditions: VCC = AVCC0 = 2.7 to 5.5 V

Parameter		Symbol	Min	Typ	Max	Unit	Test Conditions
Schmitt trigger input voltage	IIC (except for SMBus)*1	V_{IH}	VCC × 0.7	-	5.8	V	-
		V_{IL}	-	-	VCC × 0.3		
		ΔV_T	VCC × 0.05	-	-		
	RES, NMI Other peripheral input pins excluding IIC	V_{IH}	VCC × 0.8	-	-		
		V_{IL}	-	-	VCC × 0.2		
		ΔV_T	VCC × 0.1	-	-		
Input voltage (except for Schmitt trigger input pin)	IIC (SMBus)*2	V_{IH}	2.2	-	-		VCC = 3.6 to 5.5 V
		V_{IH}	2.0	-	-		VCC =2.7 to 3.6 V
		V_{IL}	-	-	0.8		-
	5V-tolerant ports*3	V_{IH}	VCC × 0.8	-	5.8		
		V_{IL}	-	-	VCC × 0.2		
	P000 to P004 P010 to P015	V_{IH}	AVCC0 × 0.8	-	-		
		V_{IL}	-	-	AVCC0 × 0.2		
	EXTAL Input ports pins except for P000 to P004, P010 to P015	V_{IH}	VCC × 0.8	-	-		
		V_{IL}	-	-	VCC × 0.2		

Note 1. SCL0_A, SDA0_A, SDA0_B, SCL1_A, SDA1_A (total 5 pins)
Note 2. SCL0_A, SDA0_A, SCL0_B, SDA0_B, SCL1_A, SDA1_A, SCL1_B, SDA1_B (total 8 pins)
Note 3. P205, P206, P400, P401, P407 (total 5pins)

Table 2.5 I/O V_{IH}, V_{IL} (2)
Conditions: VCC = AVCC0 = 1.6 to 2.7 V

Parameter		Symbol	Min	Typ	Max	Unit	Test Conditions
Schmitt trigger input voltage	RES, NMI Peripheral input pins	V_{IH}	VCC × 0.8	-	-	V	-
		V_{IL}	-	-	VCC × 0.2		
		ΔV_T	VCC × 0.01	-	-		
Input voltage (except for Schmitt trigger input pin)	5V-tolerant ports*1	V_{IH}	VCC × 0.8	-	5.8		
		V_{IL}	-	-	VCC × 0.2		
	P000 to P004 P010 to P015	V_{IH}	AVCC0 × 0.8	-	-		
		V_{IL}	-	-	AVCC0 × 0.2		
	EXTAL Input ports pins except for P000 to P004, P010 to P015	V_{IH}	VCC × 0.8	-	-		
		V_{IL}	-	-	VCC × 0.2		

Note 1. P205, P206, P400, P401, P407 (total 5pins)

2.2.3 I/O I_{OH}, I_{OL}

Table 2.6 I/O I_{OH}, I_{OL}
Conditions: VCC = AVCC0 = 1.6 to 5.5 V

Parameter			Symbol	Min	Typ	Max	Unit
Permissible output current (average value per pin)	Ports P000 to P004, P010 to P015, P212, P213	-	I_{OH}	-	-	–4.0	mA
			I_{OL}	-	-	4.0	mA
	Ports P408, P409	Low drive*1	I_{OH}	-	-	–4.0	mA
			I_{OL}	-	-	4.0	mA
		Middle drive*2 VCC = 2.7 to 3.0 V	I_{OH}	-	-	–8.0	mA
			I_{OL}	-	-	8.0	mA
		Middle drive*2 VCC = 3.0 to 5.5 V	I_{OH}	-	-	–20.0	mA
			I_{OL}	-	-	20.0	mA
	Other output pins*3	Low drive*1	I_{OH}	-	-	–4.0	mA
			I_{OL}	-	-	4.0	mA
		Middle drive*2	I_{OH}	-	-	–8.0	mA
			I_{OL}	-	-	8.0	mA
Permissible output current (max value per pin)	Ports P000 to P004, P010 to P015, P212, P213	-	I_{OH}	-	-	–4.0	mA
			I_{OL}	-	-	4.0	mA
	Ports P408, P409	Low drive*1	I_{OH}	-	-	–4.0	mA
			I_{OL}	-	-	4.0	mA
		Middle drive*2 VCC = 2.7 to 3.0 V	I_{OH}	-	-	–8.0	mA
			I_{OL}	-	-	8.0	mA
		Middle drive*2 VCC = 3.0 to 5.5 V	I_{OH}	-	-	–20.0	mA
			I_{OL}	-	-	20.0	mA
	Other output pins*3	Low drive*1	I_{OH}	-	-	–4.0	mA
			I_{OL}	-	-	4.0	mA
		Middle drive*2	I_{OH}	-	-	–8.0	mA
			I_{OL}	-	-	8.0	mA
Permissible output current (max value total pins)	Total of ports P000 to P004, P010 to P015		$\Sigma I_{OH\ (max)}$	-	-	–30	mA
			$\Sigma I_{OL\ (max)}$	-	-	30	mA
	Total of all output pin		$\Sigma I_{OH\ (max)}$	-	-	–60	mA
			$\Sigma I_{OL\ (max)}$	-	-	60	mA

Caution: To protect the reliability of the MCU, the output current values should not exceed the values in this table. The average output current indicates the average value of current measured during 100 µs.

Note 1. This is the value when low driving ability is selected with the Port Drive Capability bit in the PmnPFS register.

Note 2. This is the value when middle driving ability is selected with the Port Drive Capability bit in the register.

Note 3. Except for Ports P200, P214, P215, which are input ports.

2.2.4 I/O V_{OH}, V_{OL}, and Other Characteristics

Table 2.7 I/O V_{OH}, V_{OL} (1)
Conditions: VCC = AVCC0 = 4.0 to 5.5 V

Parameter			Symbol	Min	Typ	Max	Unit	Test conditions
Output voltage	IIC*1, *2		V_{OL}	-	-	0.4	V	I_{OL} = 3.0 mA
			V_{OL}	-	-	0.6		I_{OL} = 6.0 mA
	Ports P408, P409*2, *3		V_{OH}	VCC – 1.0	-	-		I_{OH} = –20 mA
			V_{OL}	-	-	1.0		I_{OL} = 20 mA
	Ports P000 to P004 P010 to P015	Low drive	V_{OH}	AVCC0 – 0.8	-			I_{OH} = –2.0 mA
			V_{OL}	-	-	0.8		I_{OL} = 2.0 mA
		Middle drive	V_{OH}	AVCC0 – 0.8	-			I_{OH} = –4.0 mA
			V_{OL}	-	-	0.8		I_{OL} = 4.0 mA
	Other output pins*4	Low drive	V_{OH}	VCC – 0.8	-	-		I_{OH} = –2.0 mA
			V_{OL}	-	-	0.8		I_{OL} = 2.0 mA
		Middle drive*5	V_{OH}	VCC – 0.8	-	-		I_{OH} = –4.0 mA
			V_{OL}	-	-	0.8		I_{OL} = 4.0 mA

Note 1. SCL0_A, SDA0_A, SCL0_B, SDA0_B, SCL1_A, SDA1_A, SCL1_B, SDA1_B (total 8 pins).
Note 2. This is the value when middle driving ability is selected with the Port Drive Capability bit in the PmnPFS register.
Note 3. Based on characterization data, not tested in production.
Note 4. Except for Ports P200, P214, and P215, which are input ports.
Note 5. Except for P212, P213.

Table 2.8 I/O V_{OH}, V_{OL} (2)
Conditions: VCC = AVCC0 = 2.7 to 4.0 V

Parameter			Symbol	Min	Typ	Max	Unit	Test conditions
Output voltage	IIC*1, *2		V_{OL}	-	-	0.4	V	I_{OL} = 3.0 mA
			V_{OL}	-	-	0.6		I_{OL} = 6.0 mA
	Ports P408, P409*2, *3		V_{OH}	VCC – 1.0	-	-		I_{OH} = –20 mA VCC = 3.3 V
			V_{OL}	-	-	1.0		I_{OL} = 20 mA VCC = 3.3 V
	Ports P000 to P004 P010 to P015	Low drive	V_{OH}	AVCC0 – 0.5	-	-		I_{OH} = –1.0 mA
			V_{OL}	-	-	0.5		I_{OL} = 1.0 mA
		Middle drive	V_{OH}	AVCC0 – 0.5	-	-		I_{OH} = –2.0 mA
			V_{OL}	-	-	0.5		I_{OL} = 2.0 mA
	Other output pins*4	Low drive	V_{OH}	VCC – 0.5	-	-		I_{OH} = –1.0 mA
			V_{OL}	-	-	0.5		I_{OL} = 1.0 mA
		Middle drive*5	V_{OH}	VCC – 0.5	-	-		I_{OH} = –2.0 mA
			V_{OL}	-	-	0.5		I_{OL} = 2.0 mA

Note 1. SCL0_A, SDA0_A, SCL0_B, SDA0_B, SCL1_A, SDA1_A, SCL1_B, SDA1_B (total 8 pins).
Note 2. This is the value when middle driving ability is selected with the Port Drive Capability bit in the PmnPFS register.
Note 3. Based on characterization data, not tested in production.
Note 4. Except for Ports P200, P214, P215, which are input ports.
Note 5. Except for P212, P213.

Table 2.9 I/O V_{OH}, V_{OL} (3)
Conditions: VCC = AVCC0 = 1.6 to 2.7 V

Parameter			Symbol	Min	Typ	Max	Unit	Test conditions
Output voltage	Ports P000 to P004 P010 to P015	Low drive	V_{OH}	AVCC0 – 0.3	-	-		I_{OH} = –0.5 mA
			V_{OL}	-	-	0.3		I_{OL} = 0.5 mA
		Middle drive	V_{OH}	AVCC0 – 0.3	-	-		I_{OH} = –1.0 mA
			V_{OL}	-	-	0.3		I_{OL} = 1.0 mA
	Other output pins*1	Low drive	V_{OH}	VCC – 0.3	-	-	V	I_{OH} = –0.5 mA
			V_{OL}	-	-	0.3		I_{OL} = 0.5 mA
		Middle drive*2	V_{OH}	VCC – 0.3	-	-		I_{OH} = –1.0 mA
			V_{OL}	-	-	0.3		I_{OL} = 1.0 mA

Note 1. Except for Ports P200, P214, P215, which are input ports.
Note 2. Except for P212, P213.

Table 2.10 I/O other characteristics
Conditions: VCC = AVCC0 = 1.6 to 5.5 V

Parameter		Symbol	Min	Typ	Max	Unit	Test conditions
Input leakage current	RES, Ports P200, P214, P215	$\lvert I_{in} \rvert$	-	-	1.0	μA	V_{in} = 0 V V_{in} = VCC
Three-state leakage current (off state)	5V-tolerant ports	$\lvert I_{TSI} \rvert$	-	-	1.0	μA	V_{in} = 0 V V_{in} = 5.8 V
	Other ports		-	-	1.0		V_{in} = 0 V V_{in} = VCC
Input pull-up resistor	All ports (except for P200, P214, P215)	R_U	10	20	50	kΩ	V_{in} = 0 V
Input capacitance	USB_DP, USB_DM, P200	C_{in}	-	-	30	pF	V_{in} = 0 V f = 1 MHz T_a = 25°C
	Other input pins		-	-	15		

2.2.5 I/O Pin Output Characteristics of Low Drive Capacity

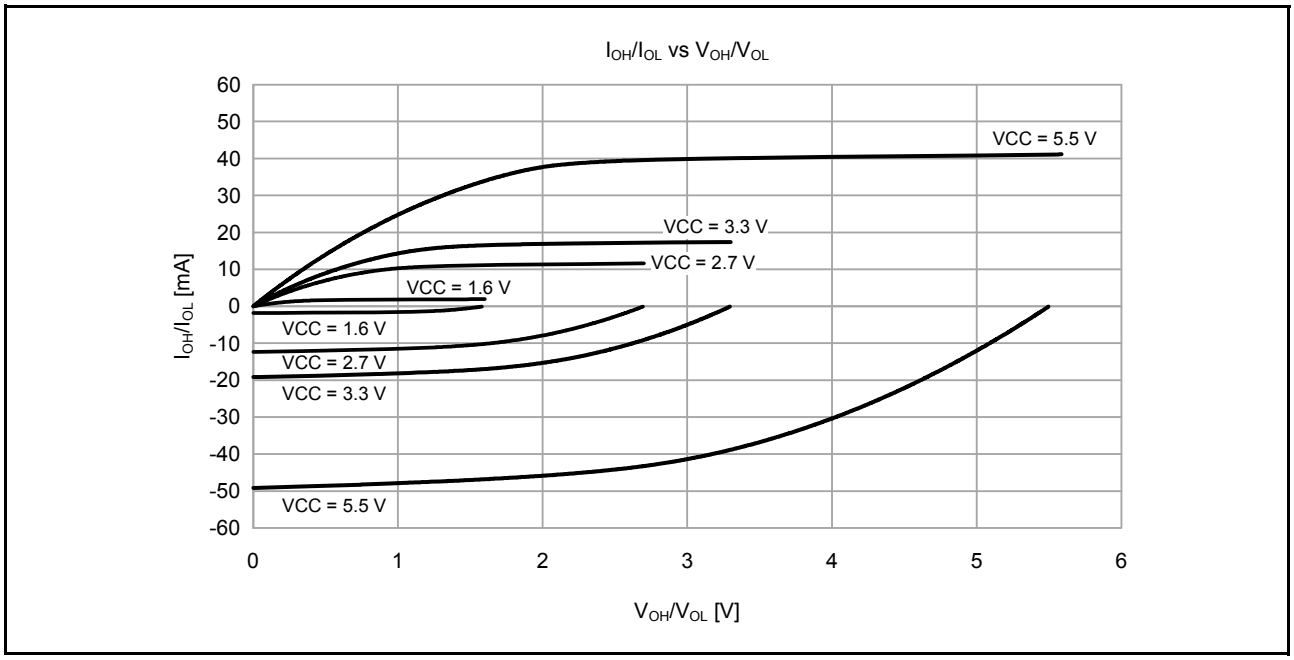

Figure 2.2 **V_{OH}/V_{OL} and I_{OH}/I_{OL} voltage characteristics at Ta = 25°C when low drive output is selected (reference data)**

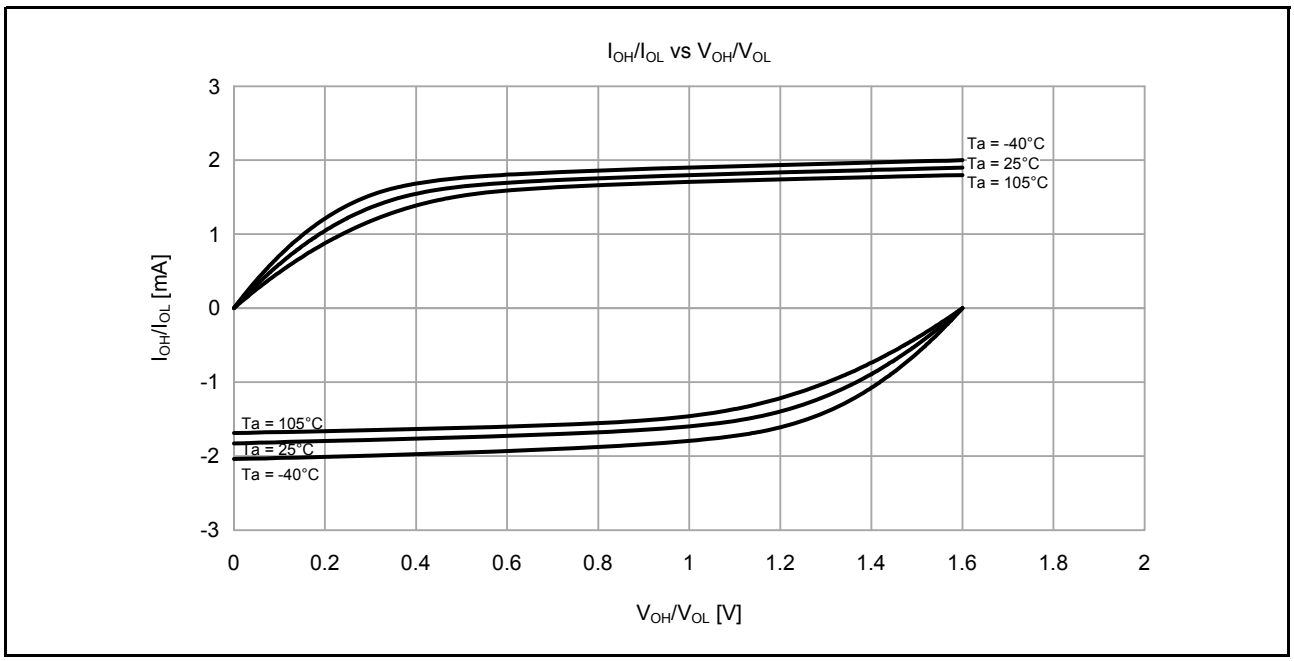

Figure 2.3 **V_{OH}/V_{OL} and I_{OH}/I_{OL} temperature characteristics at VCC = 1.6 V when low drive output is selected (reference data)**

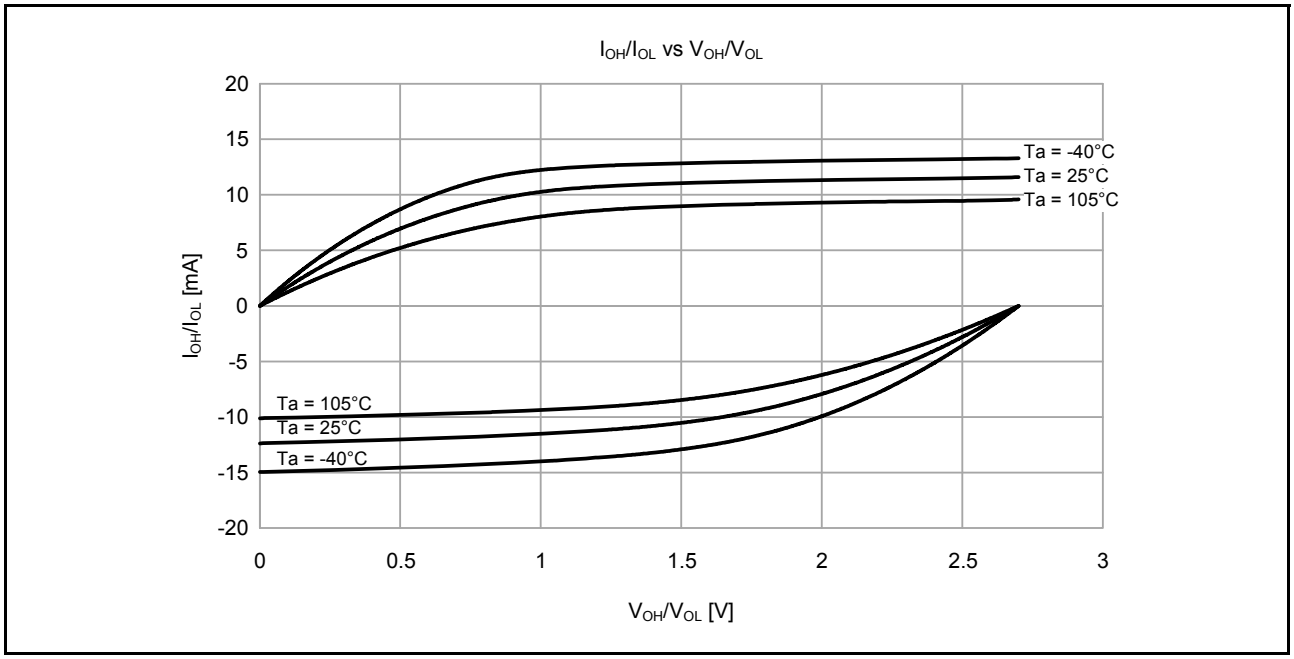

Figure 2.4 **V_{OH}/V_{OL} and I_{OH}/I_{OL} temperature characteristics at VCC = 2.7 V when low drive output is selected (reference data)**

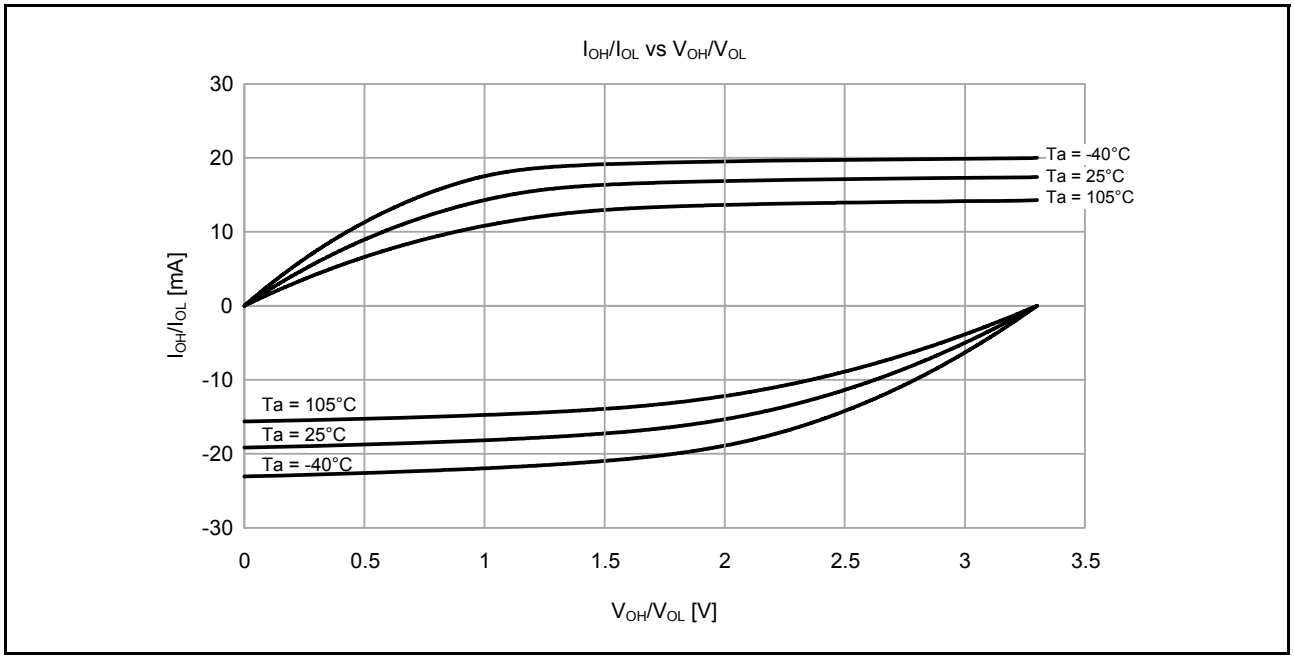

Figure 2.5 **V_{OH}/V_{OL} and I_{OH}/I_{OL} temperature characteristics at VCC = 3.3 V when low drive output is selected (reference data)**

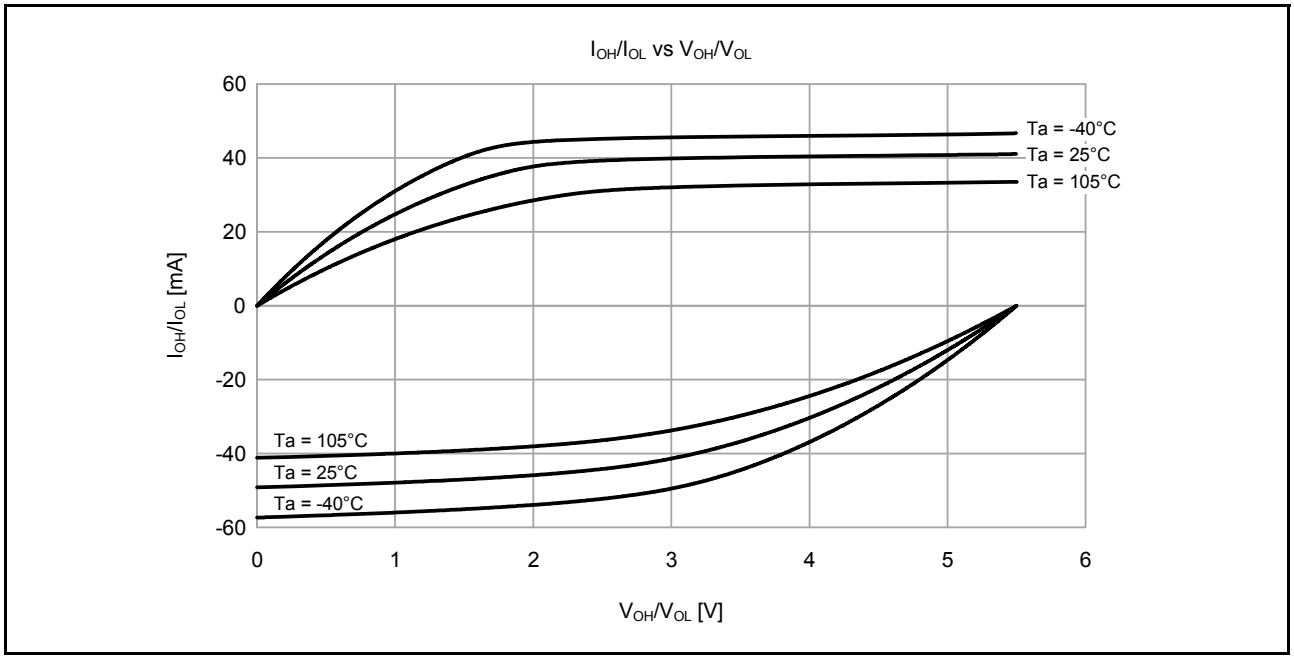

Figure 2.6 **V_{OH}/V_{OL} and I_{OH}/I_{OL} temperature characteristics at VCC = 5.5 V when low drive output is selected (reference data)**

2.2.6 I/O Pin Output Characteristics of Middle Drive Capacity

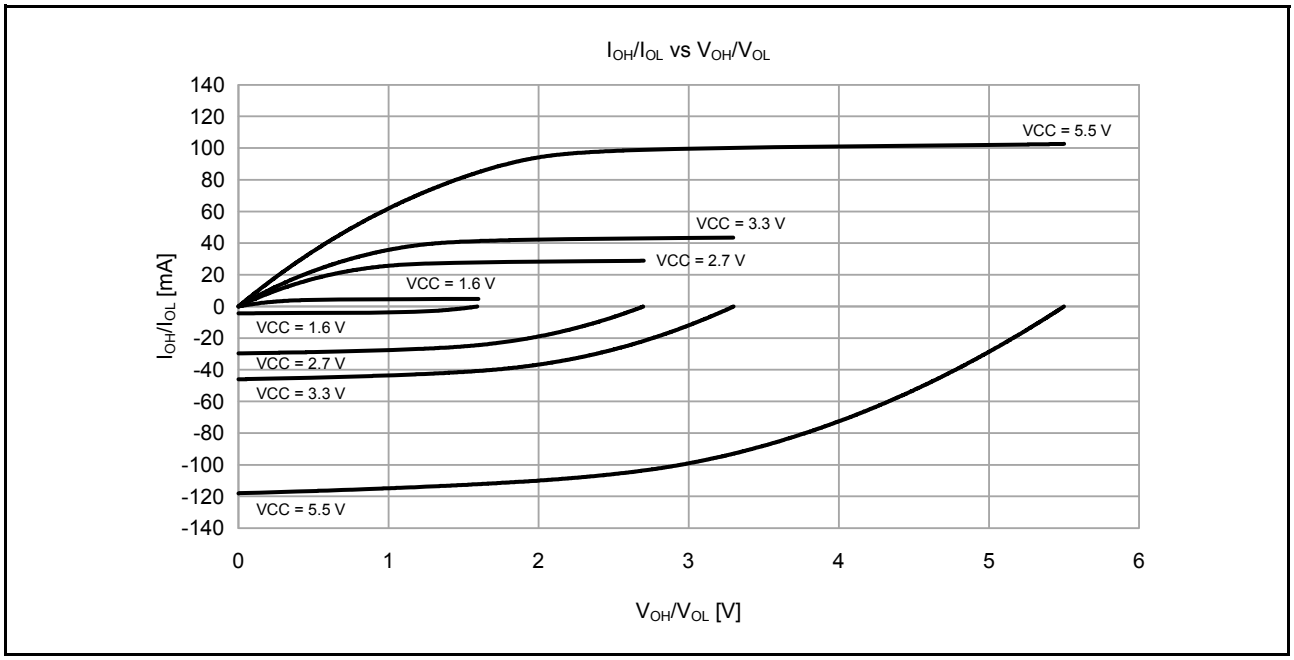

Figure 2.7 **V_{OH}/V_{OL} and I_{OH}/I_{OL} voltage characteristics at Ta = 25°C when middle drive output is selected (reference data)**

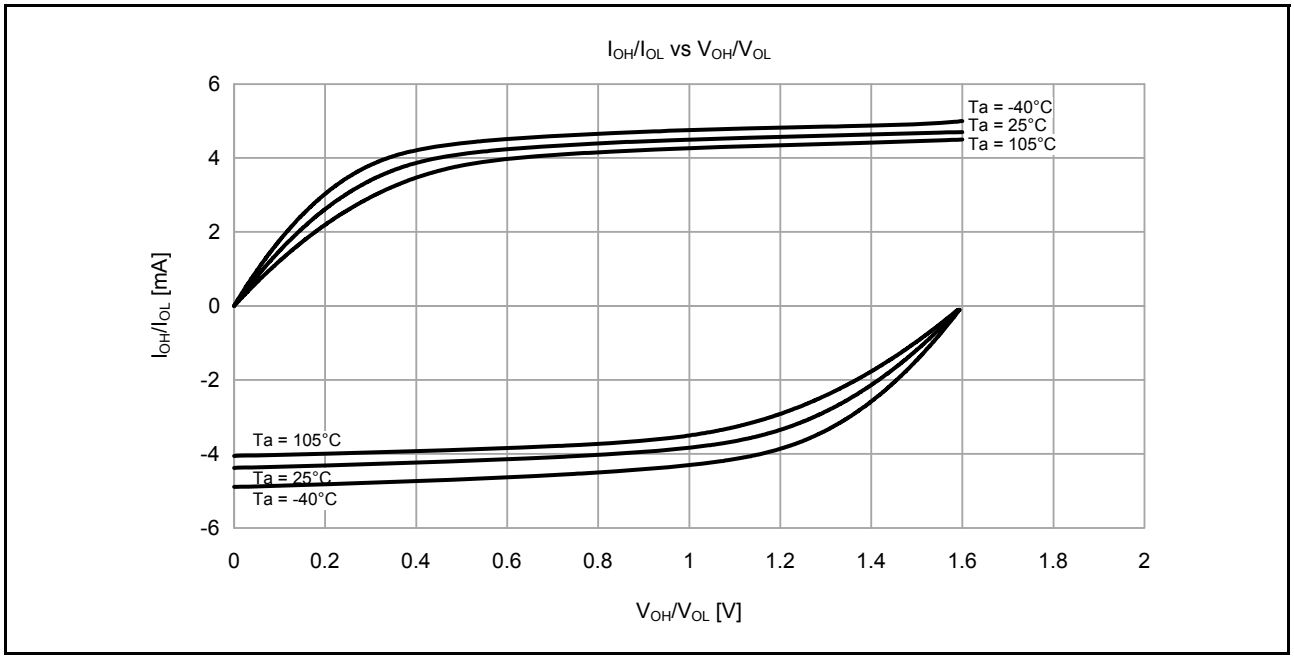

Figure 2.8 **V_{OH}/V_{OL} and I_{OH}/I_{OL} temperature characteristics at VCC = 1.6 V when middle drive output is selected (reference data)**

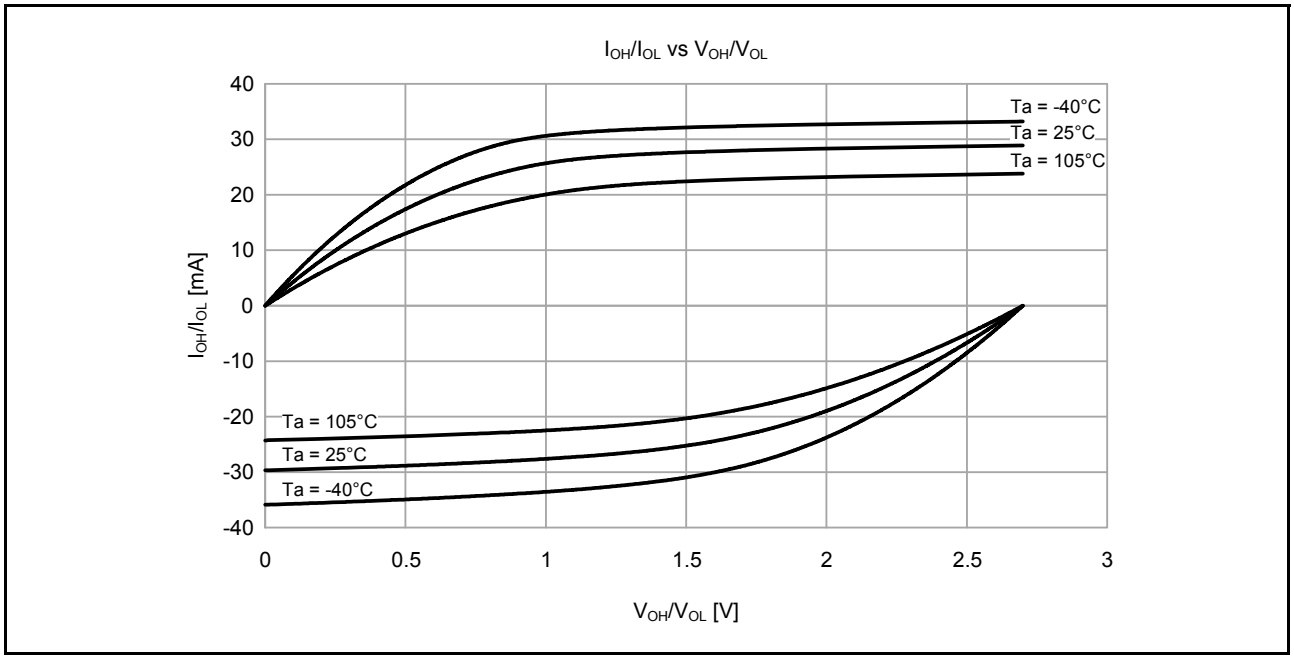

Figure 2.9 **V_{OH}/V_{OL} and I_{OH}/I_{OL} temperature characteristics at VCC = 2.7 V when middle drive output is selected (reference data)**

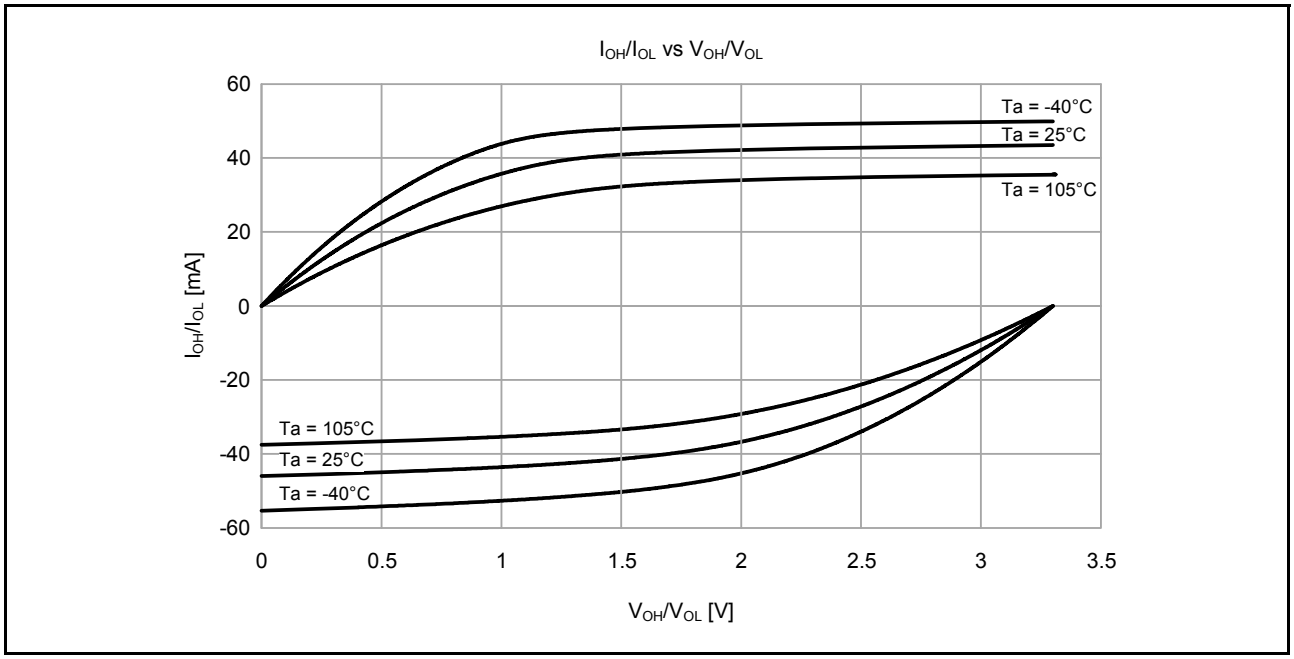

Figure 2.10 **V_{OH}/V_{OL} and I_{OH}/I_{OL} temperature characteristics at VCC = 3.3 V when middle drive output is selected (reference data)**

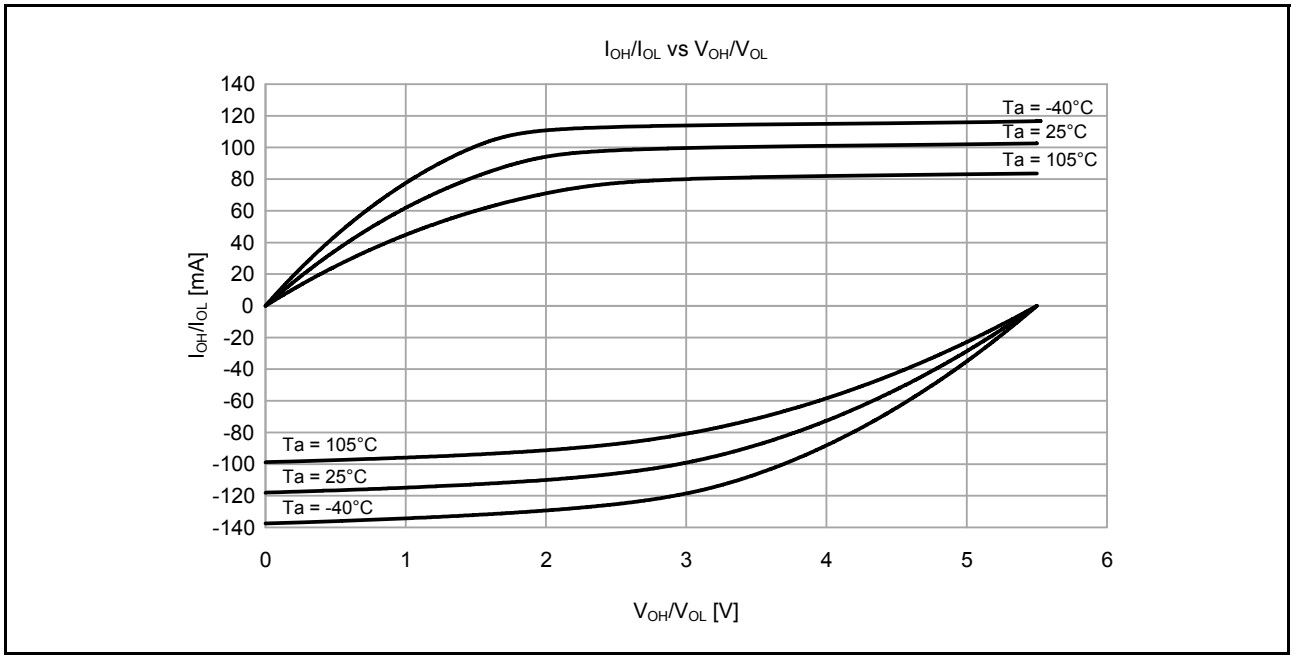

Figure 2.11 **V_{OH}/V_{OL} and I_{OH}/I_{OL} temperature characteristics at VCC = 5.5 V when middle drive output is selected (reference data)**

2.2.7 P408, P409 I/O Pin Output Characteristics of Middle Drive Capacity

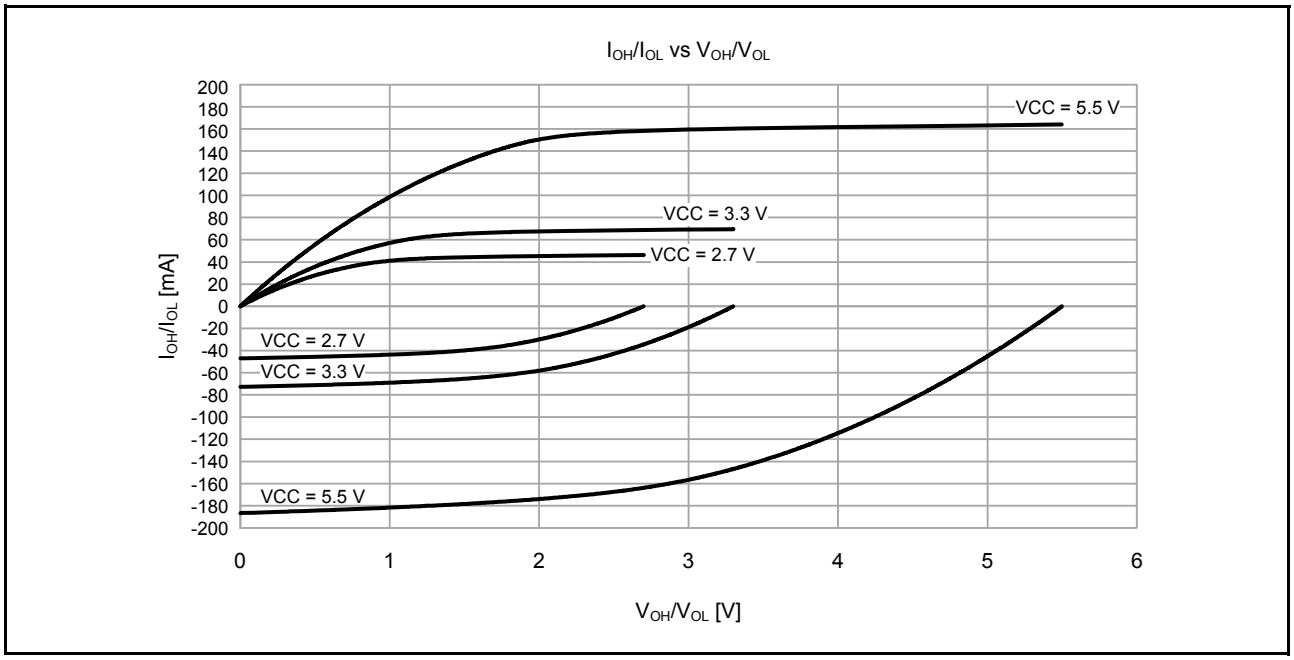

Figure 2.12 **V_{OH}/V_{OL} and I_{OH}/I_{OL} voltage characteristics at Ta = 25°C when middle drive output is selected (reference data)**

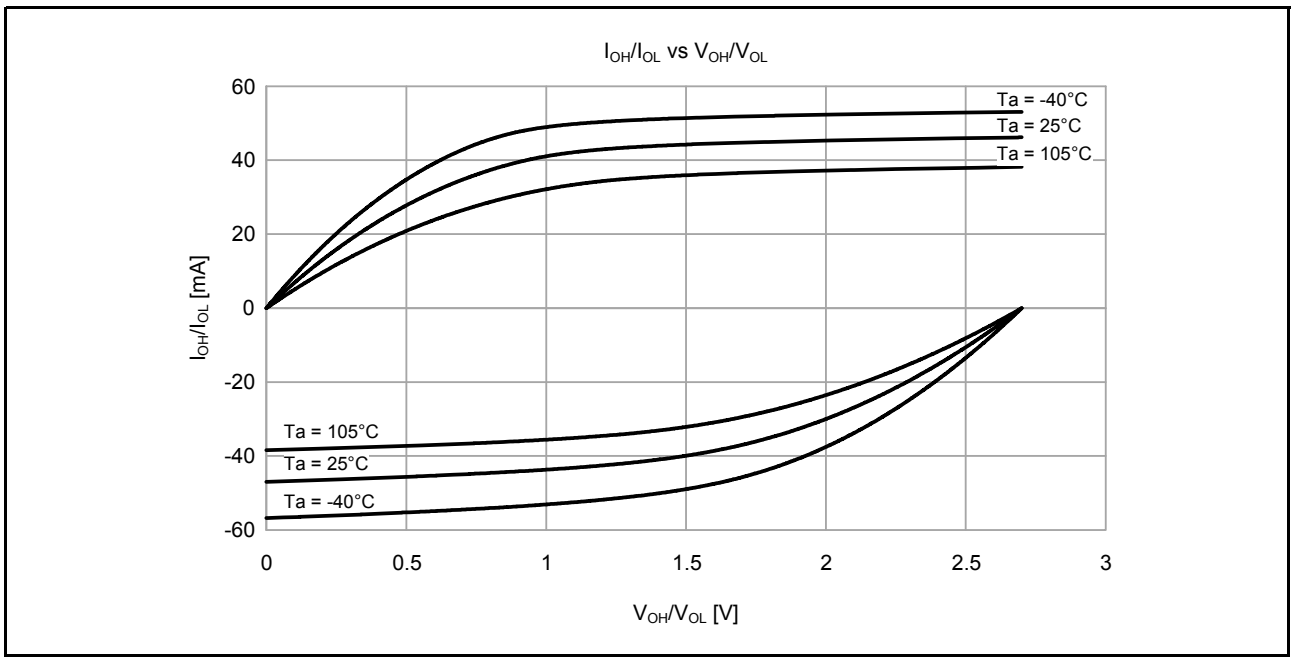

Figure 2.13 **V_{OH}/V_{OL} and I_{OH}/I_{OL} temperature characteristics at VCC = 2.7 V when middle drive output is selected (reference data)**

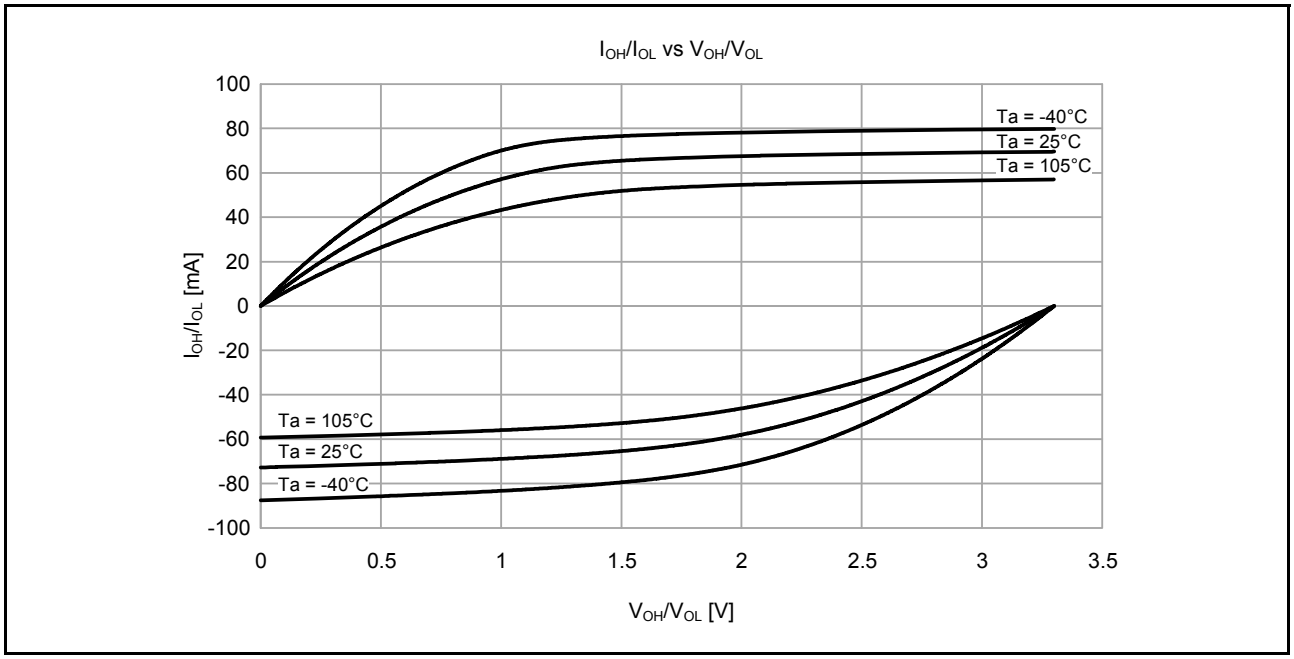

Figure 2.14 **V_{OH}/V_{OL} and I_{OH}/I_{OL} temperature characteristics at VCC = 3.3 V when middle drive output is selected (reference data)**

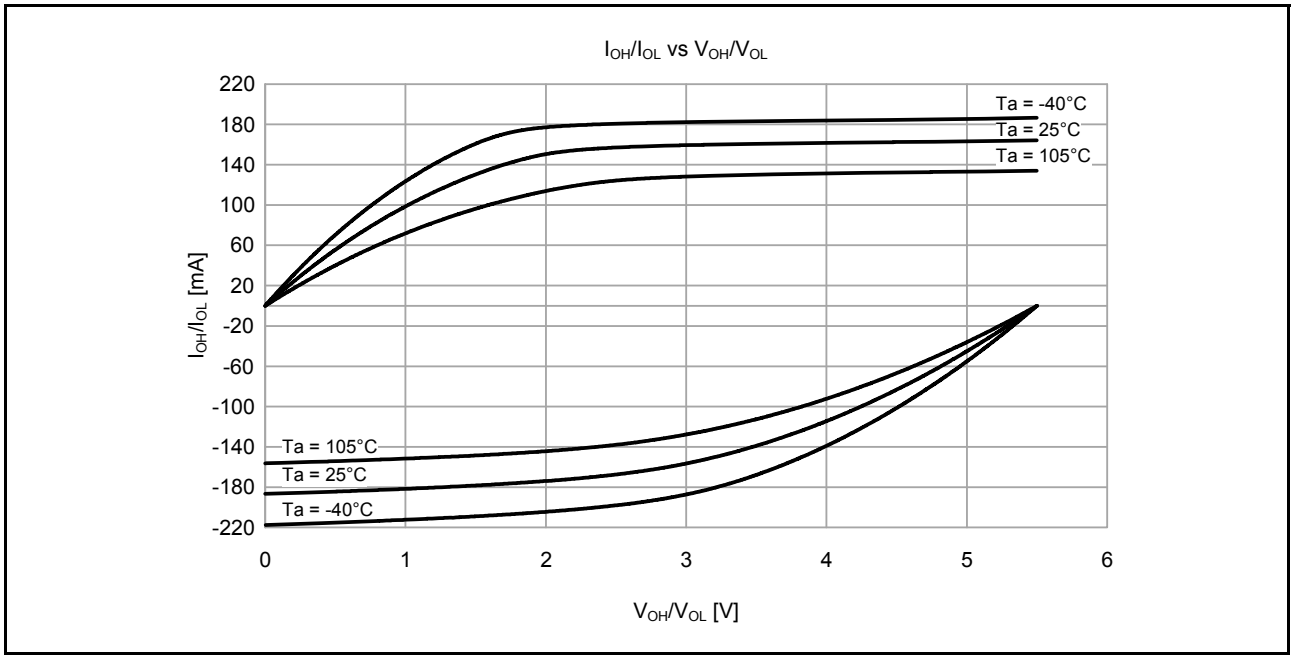

Figure 2.15 **V_{OH}/V_{OL} and I_{OH}/I_{OL} temperature characteristics at VCC = 5.5 V when middle drive output is selected (reference data)**

2.2.8 IIC I/O Pin Output Characteristics

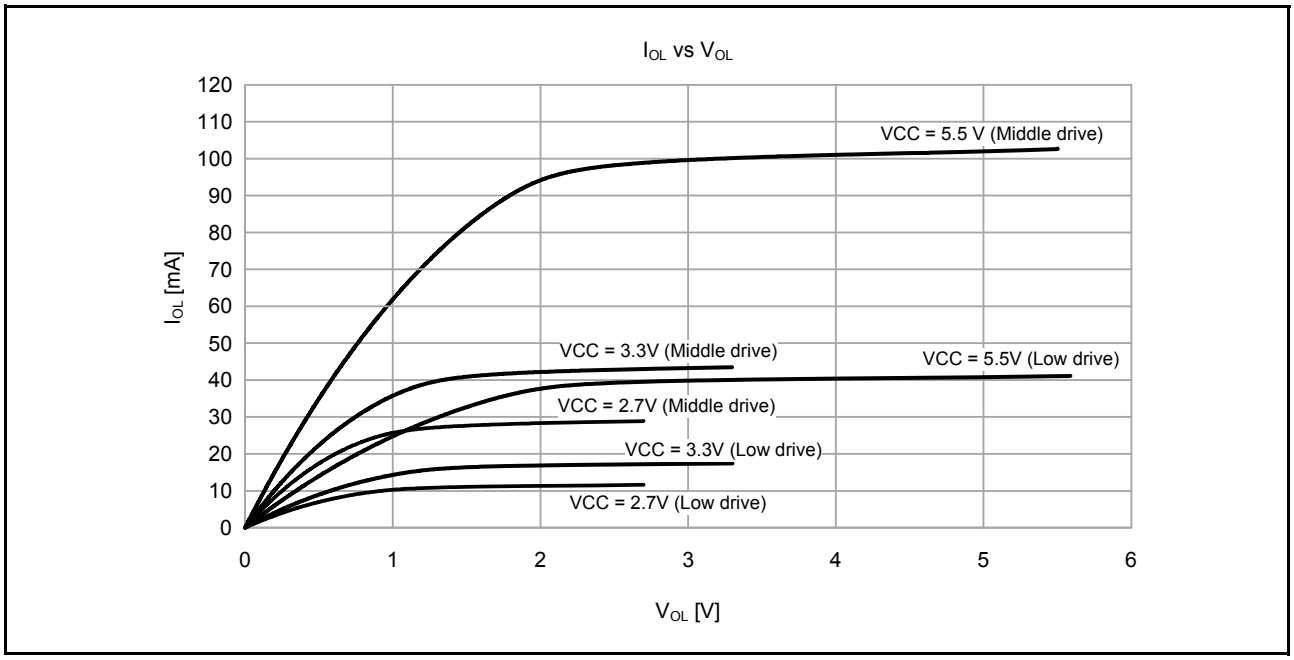

Figure 2.16 **V_{OH}/V_{OL} and I_{OH}/I_{OL} voltage characteristics at Ta = 25°C**

2.2.9 Operating and Standby Current

Table 2.11 Operating and standby current (1) (1 of 2)
Conditions: VCC = AVCC0 = 1.6 to 5.5 V

Parameter					Symbol	Typ*9	Max	Unit	Test Conditions
Supply current*1	High-speed mode*2	Normal mode	All peripheral clock disabled, while (1) code executing from flash*5	ICLK = 32 MHz	I_{CC}	3.6	-	mA	*7
				ICLK = 16 MHz		2.4	-		
				ICLK = 8 MHz		1.7	-		
			All peripheral clock disabled, CoreMark code executing from flash*5	ICLK = 32 MHz		5.6	-		
				ICLK = 16 MHz		3.5	-		
				ICLK = 8 MHz		2.4	-		
			All peripheral clock enabled, while (1) code executing from flash*5	ICLK = 32 MHz		9.5	-		*8
				ICLK = 16 MHz		5.4	-		
				ICLK = 8 MHz		3.3	-		
			All peripheral clock enabled, code executing from flash*5	ICLK = 32 MHz		-	21.0		
		Sleep mode	All peripheral clock disabled*5	ICLK = 32 MHz		1.5	-		*7
				ICLK = 16 MHz		1.1	-		
				ICLK = 8 MHz		0.9	-		
			All peripheral clock enabled*5	ICLK = 32 MHz		7.2	-		*8
				ICLK = 16 MHz		4.0	-		
				ICLK = 8 MHz		2.4	-		
		Increase during BGO operation*6				2.5	-		-
	Middle-speed mode*2	Normal mode	All peripheral clock disabled, while (1) code executing from flash*5	ICLK = 12 MHz	I_{CC}	1.7	-	mA	*7
				ICLK = 8 MHz		1.5	-		
			All peripheral clock disabled, CoreMark code executing from flash*5	ICLK = 12 MHz		2.7	-		
				ICLK = 8 MHz		1.9	-		
			All peripheral clock enabled, while (1) code executing from flash*5	ICLK = 12 MHz		3.9	-		*8
				ICLK = 8 MHz		3.0	-		
			All peripheral clock enabled, code executing from flash*5	ICLK = 12 MHz		-	8.0		
		Sleep mode	All peripheral clock disabled*5	ICLK = 12 MHz		0.8	-		*7
				ICLK = 8 MHz		0.8	-		
			All peripheral clock enabled*5	ICLK = 12 MHz		2.9	-		*8
				ICLK = 8 MHz		2.2	-		
		Increase during BGO operation*6				2.5	-		-
	Low-speed mode*3	Normal mode	All peripheral clock disabled, while (1) code executing from flash*5	ICLK = 1 MHz	I_{CC}	0.2	-	mA	*7
			All peripheral clock disabled, CoreMark code executing from flash*5	ICLK = 1 MHz		0.3	-		
			All peripheral clock enabled, while (1) code executing from flash*5	ICLK = 1 MHz		0.4	-		*8
			All peripheral clock enabled, code executing from flash*5	ICLK = 1 MHz		-	2.0		
		Sleep mode	All peripheral clock disabled*5	ICLK = 1 MHz		0.2	-		*7
			All peripheral clock enabled*5	ICLK = 1 MHz		0.3	-		*8

Table 2.11 Operating and standby current (1) (2 of 2)
Conditions: VCC = AVCC0 = 1.6 to 5.5 V

Parameter					Symbol	Typ*9	Max	Unit	Test Conditions
Supply current*1	Low-voltage mode*3	Normal mode	All peripheral clock disabled, while (1) code executing from flash*5	ICLK = 4 MHz	I_{CC}	1.4	-	mA	*7
			All peripheral clock disabled, CoreMark code executing from flash*5	ICLK = 4 MHz		1.4	-		
			All peripheral clock enabled, while (1) code executing from flash*5	ICLK = 4 MHz		2.1	-		*8
			All peripheral clock enabled, code executing from flash*5	ICLK = 4 MHz		-	4.0		
		Sleep mode	All peripheral clock disabled*5	ICLK = 4 MHz		0.9	-		*7
			All peripheral clock enabled*5	ICLK = 4 MHz		1.6	-		*8
	Subosc-speed mode*4	Normal mode	All peripheral clock disabled, while (1) code executing from flash*5	ICLK = 32.768 kHz	I_{CC}	5.9	-	μA	*7
			All peripheral clock enabled, while (1) code executing from flash*5	ICLK = 32.768 kHz		13.0	-		*8
			All peripheral clock enabled, code executing from flash*5	ICLK = 32.768 kHz		-	55.0		
		Sleep mode	All peripheral clock disabled*5	ICLK = 32.768 kHz		3.2	-		*7
			All peripheral clock enabled*5	ICLK = 32.768 kHz		10.0	-		*8

Note 1. Supply current values do not include output charge/discharge current from all pins. The values apply when internal pull-up MOSs are in the off state.
Note 2. The clock source is HOCO.
Note 3. The clock source is MOCO.
Note 4. The clock source is the sub-clock oscillator.
Note 5. This does not include BGO operation.
Note 6. This is the increase for programming or erasure of the flash memory for data storage during program execution.
Note 7. PCLKB and PCLKD are set to divided by 64.
Note 8. PCLKB and PCLKD are the same frequency as that of ICLK.
Note 9. VCC = 3.3 V.

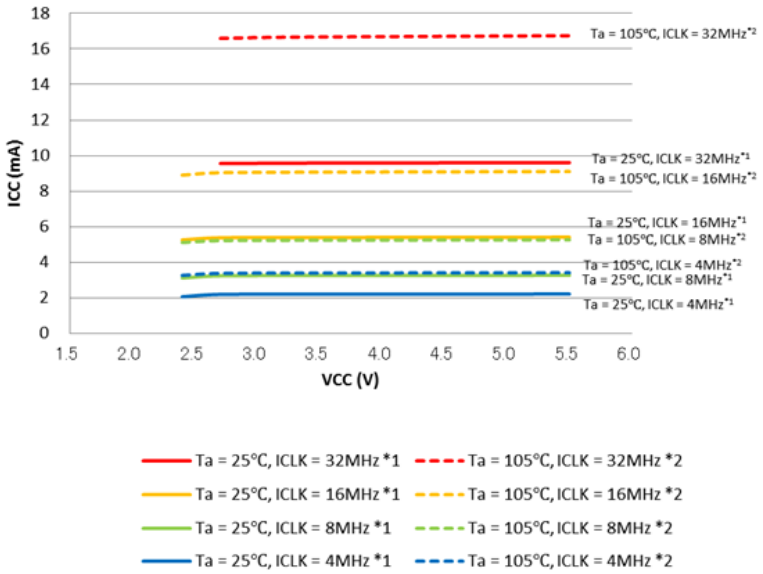

Note 1. All peripheral operations except any BGO operation are operating normally. This is the average of the actual measurements of the sample cores during product evaluation.

Note 2. All peripheral operations except any BGO operation are operating at maximum. This is the average of the actual measurements for the upper limit samples during product evaluation.

Figure 2.17 Voltage dependency in high-speed operating mode (reference data)

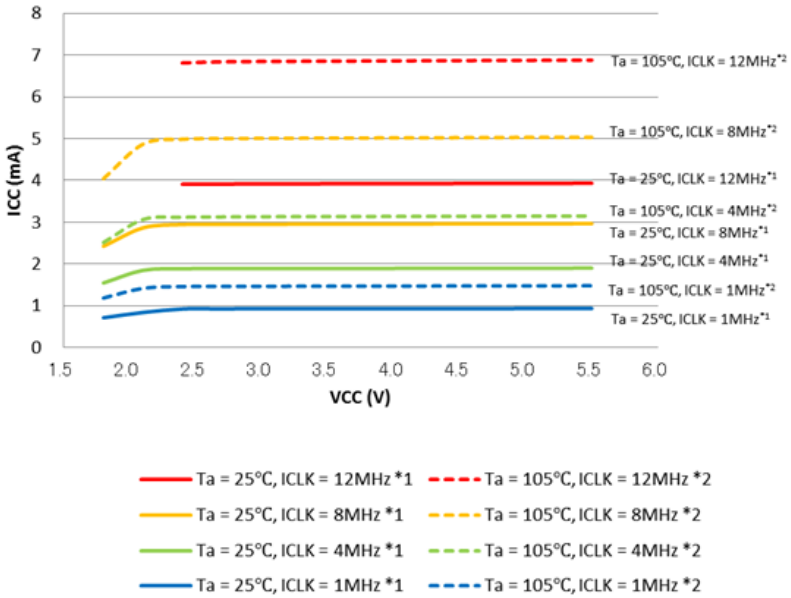

Note 1. All peripheral operations except any BGO operation are operating normally. This is the average of the actual measurements of the sample cores during product evaluation.

Note 2. All peripheral operations except any BGO operation are operating at maximum. This is the average of the actual measurements for the upper limit samples during product evaluation.

Figure 2.18 Voltage dependency in middle-speed operating mode (reference data)

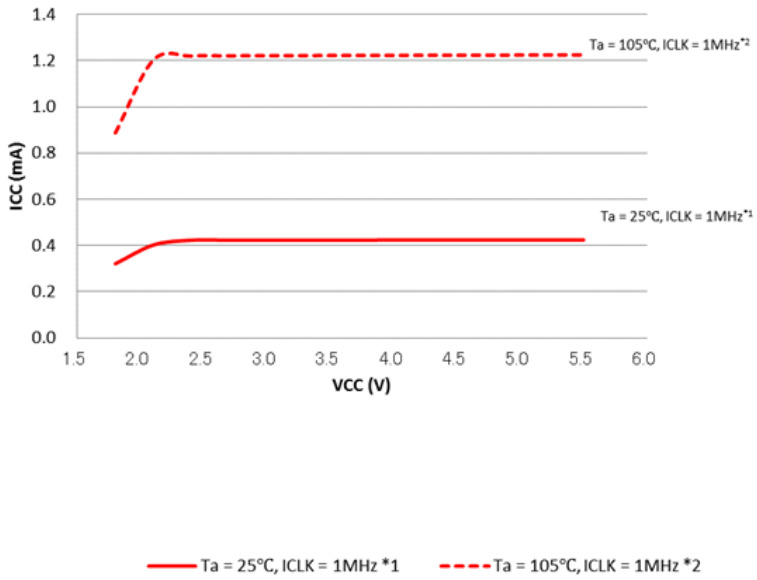

Note 1. All peripheral operations except any BGO operation are operating normally. This is the average of the actual measurements of the sample cores during product evaluation.

Note 2. All peripheral operations except any BGO operation are operating at maximum. This is the average of the actual measurements for the upper limit samples during product evaluation.

Figure 2.19 Voltage dependency in low-speed operating mode (reference data)

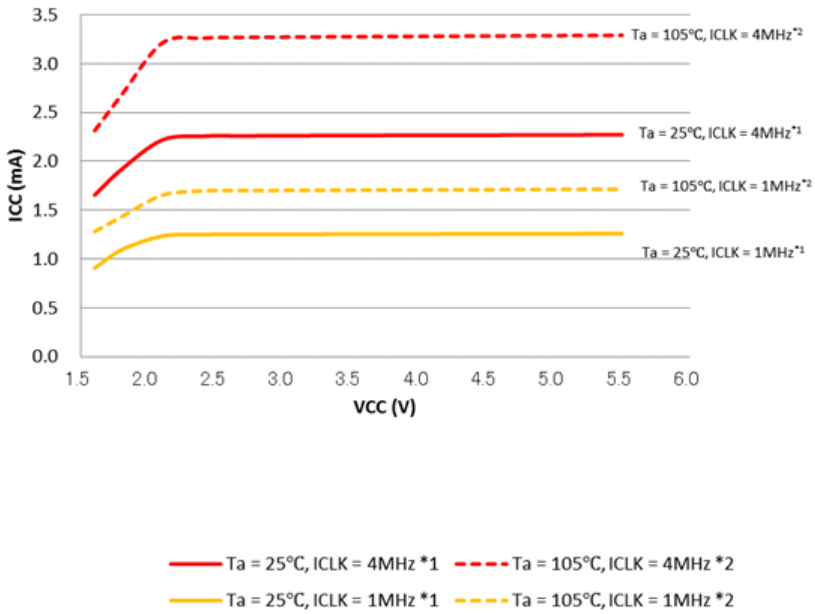

Note 1. All peripheral operations except any BGO operation are operating normally. This is the average of the actual measurements of the sample cores during product evaluation.

Note 2. All peripheral operations except any BGO operation are operating at maximum. This is the average of the actual measurements for the upper limit samples during product evaluation.

Figure 2.20 Voltage dependency in low-voltage operating mode (reference data)

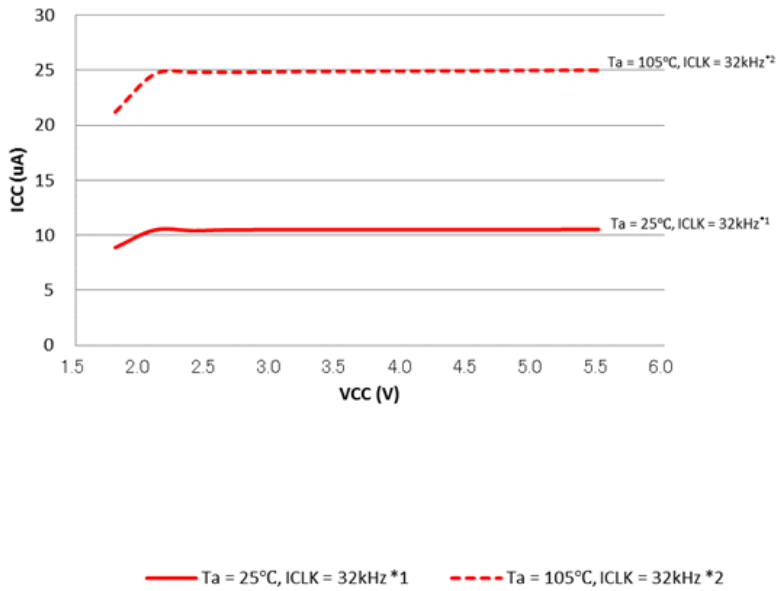

Note 1. All peripheral operations except any BGO operation are operating normally. This is the average of the actual measurements of the sample cores during product evaluation.

Note 2. All peripheral operations except any BGO operation are operating at maximum. This is the average of the actual measurements for the upper limit samples during product evaluation.

Note 3. MOCO and DAC are stopped.

Figure 2.21 Voltage dependency in subosc-speed operating mode (reference data)

Table 2.12 Operating and standby current (2)

Conditions: VCC = AVCC0 = 1.6 to 5.5 V

Parameter			Symbol	Typ*3	Max	Unit	Test conditions
Supply current*1	Software Standby mode*2	T_a = 25°C	I_{CC}	0.4	1.5	μA	-
		T_a = 55°C		0.6	5.5		
		T_a = 85°C		1.2	10.0		
		T_a = 105°C		2.6	40.0		
	Increment for RTC operation with low-speed on-chip oscillator*4			0.4	-		-
	Increment for RTC operation with sub-clock oscillator*4			0.5	-		SOMCR.SODRV[1:0] are 11b (Low power mode 3)
				1.3	-		SOMCR.SODRV[1:0] are 00b (normal mode)

Note 1. Supply current values do not include output charge/discharge current from all pins. The values apply when internal pull-up MOS transistors are in the off state.

Note 2. The IWDT and LVD are not operating.

Note 3. VCC = 3.3 V.

Note 4. Includes the current of low-speed on-chip oscillator or sub-oscillation circuit.

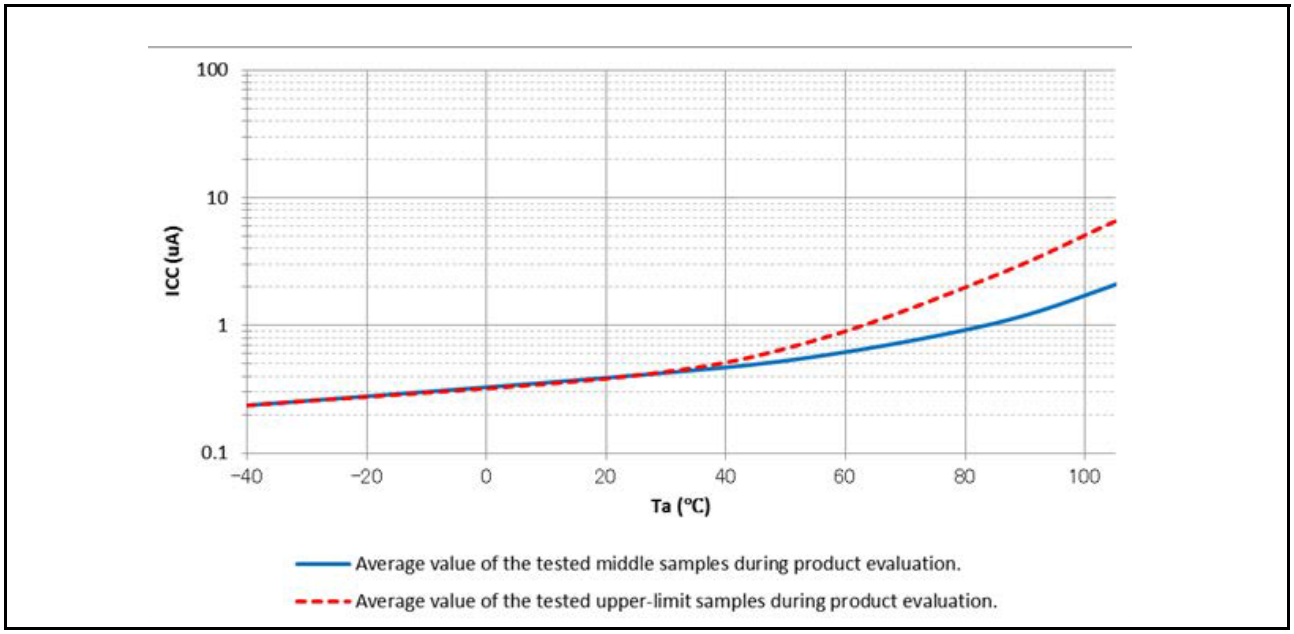

Figure 2.22 Temperature dependency in Software Standby mode (reference data)

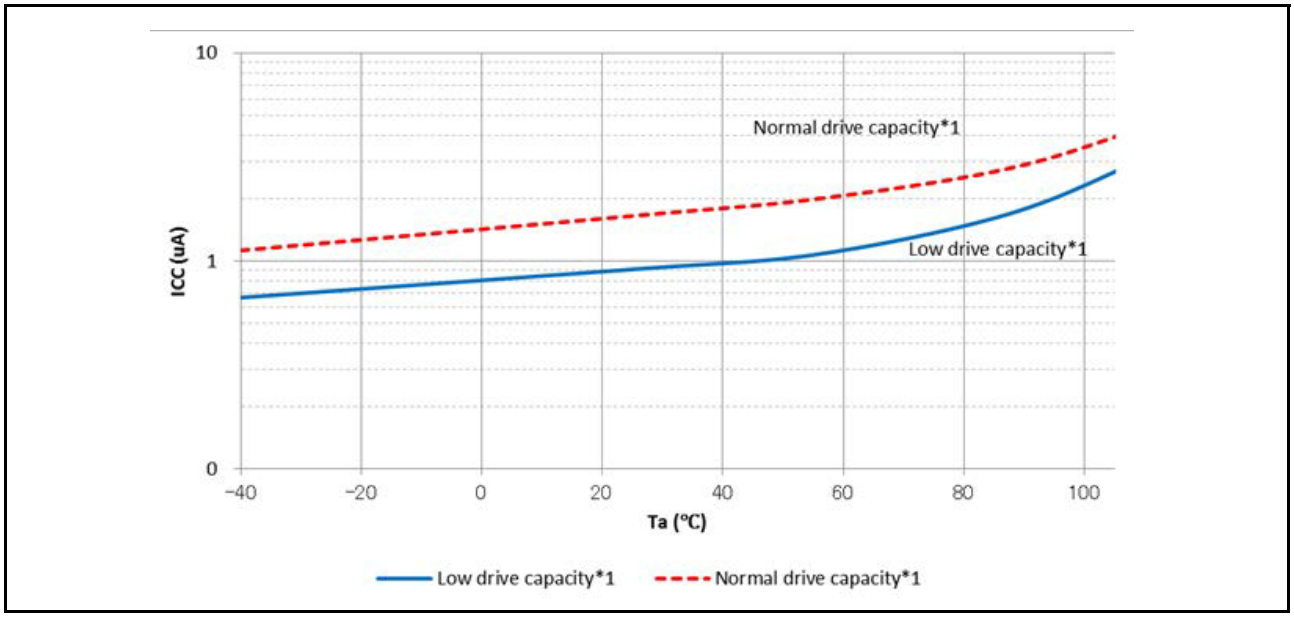

Figure 2.23 Temperature dependency of RTC operation (reference data)

Table 2.13 Operating and standby current (3) (1 of 2)

Conditions: VCC = AVCC0 = 1.6 to 5.5 V

Parameter		Symbol	Min	Typ	Max	Unit	Test conditions
Analog power supply current	During A/D conversion (at high-speed conversion)	I_{AVCC}	-	-	3.0	mA	-
	During A/D conversion (at low-power conversion)		-	-	1.0	mA	-
	During D/A conversion*1		-	0.4	0.8	mA	-
	Waiting for A/D and D/A conversion (all units)*5		-	-	1.0	μA	-
Reference power supply current	During A/D conversion	I_{REFH0}	-	-	150	μA	-
	Waiting for A/D conversion (all units)		-	-	60	nA	-
Temperature sensor		I_{TNS}	-	75	-	μA	-

Table 2.13 Operating and standby current (3) (2 of 2)
Conditions: VCC = AVCC0 = 1.6 to 5.5 V

Parameter		Symbol	Min	Typ	Max	Unit	Test conditions
Low-power analog comparator (ACMPLP) operating current	Window mode	I_{CMPLP}	-	15	-	μA	-
	Comparator high-speed mode		-	10	-	μA	-
	Comparator low-speed mode		-	2	-	μA	-
USB operating current	During USB communication under the following settings and conditions: • Function controller is in Full-Speed mode and - Bulk OUT transfer is (64 bytes) × 1 - Bulk IN transfer is (64 bytes) × 1 • Host device is connected by a 1-meter USB cable from the USB port.	I_{USBF}*2	-	3.6 (VCC) 1.1 (VCC_USB)*4	-	mA	-
	During suspended state under the following setting and conditions: • Function controller is in Full-Speed mode (the USB_DP pin is pulled up) • Software Standby mode • Host device is connected by a 1-meter USB cable from the USB port.	I_{SUSP}*3	-	0.35 (VCC) 170 (VCC_USB)*4	-	μA	-

Note 1. The reference power supply current is included in the power supply current value for D/A conversion.
Note 2. Current is consumed only by the USBFS.
Note 3. Includes the current supplied from the pull-up resistor of the USB_DP pin to the pull-down resistor of the host device, in addition to the current consumed by the MCU in the suspended state.
Note 4. When VCC = VCC_USB = 3.3 V.
Note 5. When the MSTPCRD.MSTPD16 (ADC140 module-stop bit) is in the module-stop state.

2.2.10 VCC Rise and Fall Gradient and Ripple Frequency

Table 2.14 Rise and fall gradient characteristics
Conditions: VCC = AVCC0 = 0 to 5.5 V

Parameter		Symbol	Min	Typ	Max	Unit	Test conditions
Power-on VCC rising gradient	Voltage monitor 0 reset disabled at startup	SrVCC	0.02	-	2	ms/V	-
	Voltage monitor 0 reset enabled at startup*1, *2		0.02	-	-		
	SCI Boot mode*2		0.02	-	2		

Note 1. When OFS1.LVDAS = 0.
Note 2. At boot mode, the reset from voltage monitor 0 is disabled regardless of the value of OFS1.LVDAS bit.

Table 2.15 Rising and falling gradient and ripple frequency characteristics
Conditions: VCC = AVCC0 = 1.6 to 5.5 V
The ripple voltage must meet the allowable ripple frequency $f_{r(VCC)}$ within the range between the VCC upper limit (5.5 V) and lower limit (1.6 V).
When the VCC change exceeds VCC ±10%, the allowable voltage change rising and falling gradient dt/dVCC must be met.

Parameter	Symbol	Min	Typ	Max	Unit	Test conditions
Allowable ripple frequency	$f_{r\ (VCC)}$	-	-	10	kHz	Figure 2.24 $V_{r\ (VCC)} \leq VCC \times 0.2$
		-	-	1	MHz	Figure 2.24 $V_{r\ (VCC)} \leq VCC \times 0.08$
		-	-	10	MHz	Figure 2.24 $V_{r\ (VCC)} \leq VCC \times 0.06$
Allowable voltage change rising and falling gradient	dt/dVCC	1.0	-	-	ms/V	When VCC change exceeds VCC ±10%

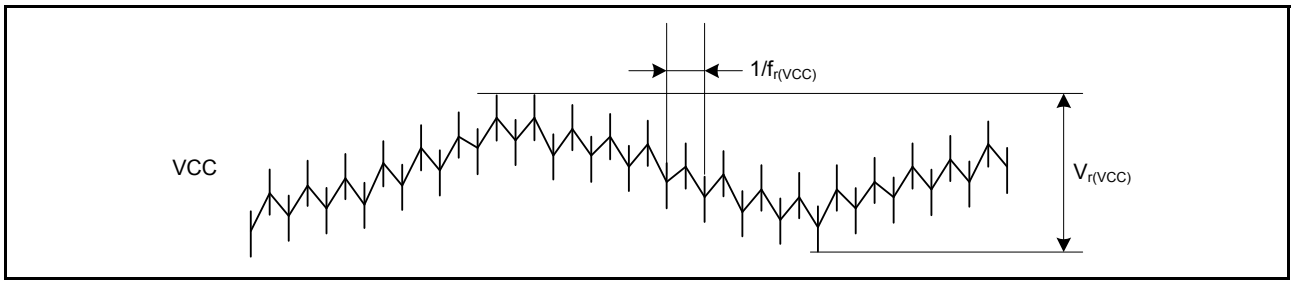

Figure 2.24 Ripple waveform

2.3 AC Characteristics

2.3.1 Frequency

Table 2.16 Operation frequency in high-speed operating mode
Conditions: VCC = AVCC0 = 2.4 to 5.5 V

Parameter			Symbol	Min	Typ	Max*5	Unit
Operation frequency	System clock (ICLK)*1, *2, *4	2.7 to 5.5 V	f	0.032768	-	32	MHz
		2.4 to 2.7 V		0.032768	-	16	
	Peripheral module clock (PCLKB)*4	2.7 to 5.5 V		-	-	32	
		2.4 to 2.7 V		-	-	16	
	Peripheral module clock (PCLKD)*3, *4	2.7 to 5.5 V		-	-	64	
		2.4 to 2.7 V		-	-	16	

Note 1. The lower-limit frequency of ICLK is 1 MHz while programming or erasing the flash memory. When using ICLK for programming or erasing the flash memory at below 4 MHz, the frequency can be set to 1 MHz, 2 MHz, or 3 MHz. A non-integer frequency such as 1.5 MHz cannot be set.
Note 2. The frequency accuracy of ICLK must be ±3.5% while programming or erasing the flash memory. Confirm the frequency accuracy of the clock source.
Note 3. The lower-limit frequency of PCLKD is 4 MHz at 2.4 V or above and 1 MHz at below 2.4 V when the 14-bit A/D converter is in use.
Note 4. See section 8, Clock Generation Circuit in User's Manual for the relationship of frequencies between ICLK, PCLKB, and PCLKD.
Note 5. The maximum value of operation frequency does not include internal oscillator errors. For details on the range of guaranteed operation, see Table 2.21, Clock timing.

Table 2.17 Operation frequency in middle-speed mode
Conditions: VCC = AVCC0 = 1.8 to 5.5 V

Parameter			Symbol	Min	Typ	Max*5	Unit
Operation frequency	System clock (ICLK)*1, *2, *4	2.7 to 5.5 V	f	0.032768	-	12	MHz
		2.4 to 2.7 V		0.032768	-	12	
		1.8 to 2.4 V		0.032768	-	8	
	Peripheral module clock (PCLKB)*4	2.7 to 5.5 V		-	-	12	
		2.4 to 2.7 V		-	-	12	
		1.8 to 2.4 V		-	-	8	
	Peripheral module clock (PCLKD)*3, *4	2.7 to 5.5 V		-	-	12	
		2.4 to 2.7 V		-	-	12	
		1.8 to 2.4 V		-	-	8	

Note 1. The lower-limit frequency of ICLK is 1 MHz while programming or erasing the flash memory. When using ICLK for programming or erasing the flash memory at below 4 MHz, the frequency can be set to 1 MHz, 2 MHz, or 3 MHz. A non-integer frequency such as 1.5 MHz cannot be set.
Note 2. The frequency accuracy of ICLK must be ±3.5% while programming or erasing the flash memory. Confirm the frequency accuracy of the clock source.
Note 3. The lower-limit frequency of PCLKD is 4 MHz at 2.4 V or above and 1 MHz at below 2.4 V when the 14-bit A/D converter is in use.
Note 4. See section 8, Clock Generation Circuit in User's Manual for the relationship of frequencies between ICLK, PCLKB, and PCLKD.
Note 5. The maximum value of operation frequency does not include internal oscillator errors. For details on the range of guaranteed operation, see Table 2.21, Clock timing.

Table 2.18 Operation frequency in low-speed mode
Conditions: VCC = AVCC0 = 1.8 to 5.5 V

Parameter			Symbol	Min	Typ	Max*5	Unit
Operation frequency	System clock (ICLK)*1, *2, *4	1.8 to 5.5 V	f	0.032768	-	1	MHz
	Peripheral module clock (PCLKB)*4	1.8 to 5.5 V		-	-	1	
	Peripheral module clock (PCLKD)*3, *4	1.8 to 5.5 V		-	-	1	

Note 1. The lower-limit frequency of ICLK is 1 MHz while programming or erasing the flash memory.
Note 2. The frequency accuracy of ICLK must be ±3.5% while programming or erasing the flash memory. Confirm the frequency accuracy of the clock source.
Note 3. The lower-limit frequency of PCLKD is 1 MHz when the A/D converter is in use.
Note 4. See section 8, Clock Generation Circuit in User's Manual for the relationship of frequencies between ICLK, PCLKB, and PCLKD.
Note 5. The maximum value of operation frequency does not include internal oscillator errors. For details on the range of guaranteed operation, see Table 2.21, Clock timing.

Table 2.19 Operation frequency in low-voltage mode
Conditions: VCC = AVCC0 = 1.6 to 5.5 V

Parameter			Symbol	Min	Typ	Max*5	Unit
Operation frequency	System clock (ICLK)*1, *2, *4	1.6 to 5.5 V	f	0.032768	-	4	MHz
	Peripheral module clock (PCLKB)*4	1.6 to 5.5 V		-	-	4	
	Peripheral module clock (PCLKD)*3, *4	1.6 to 5.5 V		-	-	4	

Note 1. The lower-limit frequency of ICLK is 1 MHz while programming or erasing the flash memory. When using ICLK for programming or erasing the flash memory at below 4 MHz, the frequency can be set to 1 MHz, 2 MHz, or 3 MHz. A non-integer frequency such as 1.5 MHz cannot be set.
Note 2. The frequency accuracy of ICLK must be ±3.5% while programming or erasing the flash memory. Confirm the frequency accuracy of the clock source.
Note 3. The lower-limit frequency of PCLKD is 4 MHz at 2.4 V or above and 1 MHz at below 2.4 V when the 14-bit A/D converter is in use.
Note 4. See section 8, Clock Generation Circuit in User's Manual for the relationship of frequencies between ICLK, PCLKB, and PCLKD.
Note 5. The maximum value of operation frequency does not include internal oscillator errors. For details on the range of guaranteed operation, see Table 2.21, Clock timing.

Table 2.20 Operation frequency in Subosc-speed mode
Conditions: VCC = AVCC0 = 1.8 to 5.5 V

Parameter			Symbol	Min	Typ	Max	Unit
Operation frequency	System clock (ICLK)*1, *3	1.8 to 5.5 V	f	27.8528	32.768	37.6832	kHz
	Peripheral module clock (PCLKB)*3	1.8 to 5.5 V		-	-	37.6832	
	Peripheral module clock (PCLKD)*2, *3	1.8 to 5.5 V		-	-	37.6832	

Note 1. Programming and erasing the flash memory is not possible.
Note 2. The 14-bit A/D converter cannot be used.
Note 3. See section 8, Clock Generation Circuit in User's Manual for the relationship between ICLK, PCLKB, and PCLKD frequencies.

2.3.2 Clock Timing

Table 2.21 Clock timing (1 of 2)

Parameter		Symbol	Min	Typ	Max	Unit	Test conditions
EXTAL external clock input cycle time		t_{Xcyc}	50	-	-	ns	Figure 2.25
EXTAL external clock input high pulse width		t_{XH}	20	-	-	ns	
EXTAL external clock input low pulse width		t_{XL}	20	-	-	ns	
EXTAL external clock rising time		t_{Xr}	-	-	5	ns	
EXTAL external clock falling time		t_{Xf}	-	-	5	ns	
EXTAL external clock input wait time*1		t_{EXWT}	0.3	-	-	μs	-
EXTAL external clock input frequency		f_{EXTAL}	-	-	20	MHz	2.4 ≤ VCC ≤ 5.5
			-	-	8		1.8 ≤ VCC < 2.4
			-	-	1		1.6 ≤ VCC < 1.8
Main clock oscillator oscillation frequency		f_{MAIN}	1	-	20	MHz	2.4 ≤ VCC ≤ 5.5
			1	-	8		1.8 ≤ VCC < 2.4
			1	-	4		1.6 ≤ VCC < 1.8
LOCO clock oscillation frequency		f_{LOCO}	27.8528	32.768	37.6832	kHz	-
LOCO clock oscillation stabilization time		t_{LOCO}	-	-	100	μs	Figure 2.26
IWDT-dedicated clock oscillation frequency		f_{ILOCO}	12.75	15	17.25	kHz	-
MOCO clock oscillation frequency		f_{MOCO}	6.8	8	9.2	MHz	-
MOCO clock oscillation stabilization time		t_{MOCO}	-	-	1	μs	-
HOCO clock oscillation frequency		f_{HOCO24}	23.64	24	24.36	MHz	Ta = –40 to –20°C 1.8 ≤ VCC ≤ 5.5
			22.68	24	25.32		Ta = –40 to 85°C 1.6 ≤ VCC < 1.8
			23.76	24	24.24		Ta = –20 to 85°C 1.8 ≤ VCC ≤ 5.5
			23.52	24	24.48		Ta = 85 to 105°C 2.4 ≤ VCC ≤ 5.5
		f_{HOCO32}	31.52	32	32.48		Ta = –40 to –20°C 1.8 ≤ VCC ≤ 5.5
			30.24	32	33.76		Ta = –40 to 85°C 1.6 ≤ VCC < 1.8
			31.68	32	32.32		Ta = –20 to 85°C 1.8 ≤ VCC ≤ 5.5
			31.36	32	32.64		Ta = 85 to 105°C 2.4 ≤ VCC ≤ 5.5
		f_{HOCO48}*3	47.28	48	48.72		Ta = –40 to –20°C 1.8 ≤ VCC ≤ 5.5
			47.52	48	48.48		Ta = –20 to 85°C 1.8 ≤ VCC ≤ 5.5
			47.04	48	48.96		Ta = 85 to 105°C 2.4 ≤ VCC ≤ 5.5
		f_{HOCO64}*4	63.04	64	64.96		Ta = –40 to –20°C 2.4 ≤ VCC ≤ 5.5
			63.36	64	64.64		Ta = –20 to 85°C 2.4 ≤ VCC ≤ 5.5
			62.72	64	65.28		Ta = 85 to 105°C 2.4 ≤ VCC ≤ 5.5
HOCO clock oscillation stabilization time*5, *6	Except low-voltage mode	t_{HOCO24} t_{HOCO32}	-	-	37.1	μs	Figure 2.27
		t_{HOCO48}	-	-	43.3		
		t_{HOCO64}	-	-	80.6		
	Low-voltage mode	t_{HOCO24} t_{HOCO32} t_{HOCO48} t_{HOCO64}	-	-	100.9		
Sub-clock oscillator oscillation frequency		f_{SUB}	-	32.768	-	kHz	-

Table 2.21 Clock timing (2 of 2)

Parameter	Symbol	Min	Typ	Max	Unit	Test conditions
Sub-clock oscillation stabilization time*2	t_{SUBOSC}	-	0.5	-	s	Figure 2.28

Note 1. Time until the clock can be used after the main clock oscillator stop bit (MOSCCR.MOSTP) is set to 0 (operating) when the external clock is stable.
Note 2. After changing the setting of the SOSCCR.SOSTP bit to start sub-clock oscillator operation, only start using the sub-clock oscillator after the sub-clock oscillation stabilization wait time elapsed. Use the oscillator wait time value recommended by the oscillator manufacturer.
Note 3. The 48-MHz HOCO can be used within a VCC range of 1.8 V to 5.5 V.
Note 4. The 64-MHz HOCO can be used within a VCC range of 2.4 V to 5.5 V.
Note 5. This is a characteristic when the HOCOCR.HCSTP bit is cleared to 0 (oscillation) in the MOCO stop state. When the HOCOCR.HCSTP bit is cleared to 0 (oscillation) during MOCO oscillation, this specification is shortened by 1 μs.
Note 6. Check OSCSF.HOCOSF to confirm whether stabilization time has elapsed.

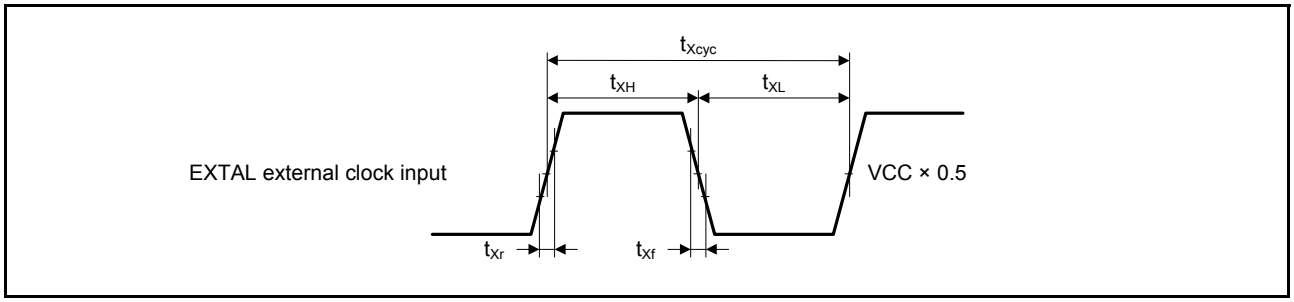

Figure 2.25 EXTAL external clock input timing

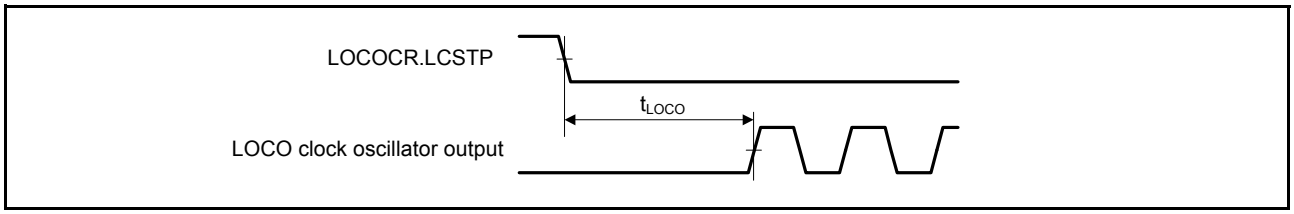

Figure 2.26 LOCO clock oscillation start timing

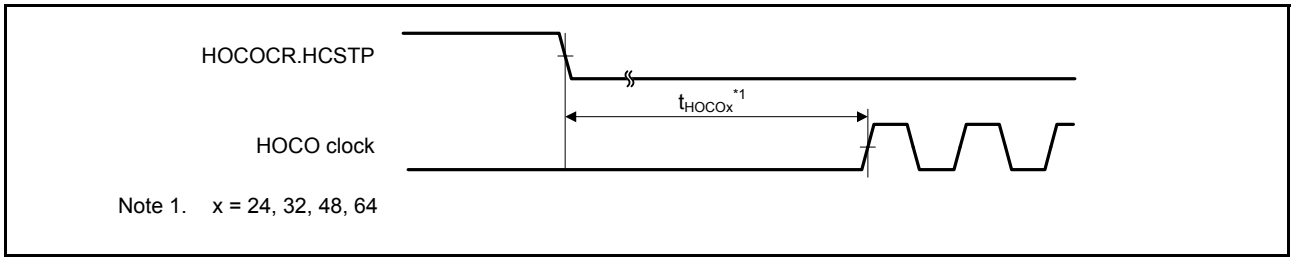

Figure 2.27 HOCO clock oscillation start timing (started by setting the HOCOCR.HCSTP bit)

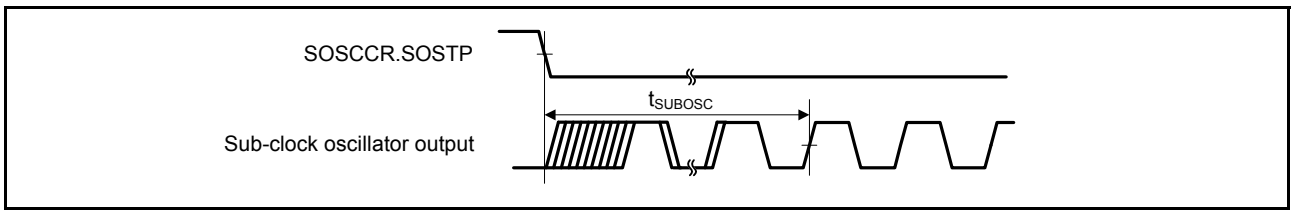

Figure 2.28 Sub-clock oscillation start timing

2.3.3 Reset Timing

Table 2.22 Reset timing

Parameter		Symbol	Min	Typ	Max	Unit	Test conditions
RES pulse width	At power-on	t_{RESWP}	3	-	-	ms	Figure 2.29
	Not at power-on	t_{RESW}	30	-	-	μs	Figure 2.30
Wait time after RES cancellation (at power-on)	LVD0 enabled*1	t_{RESWT}	-	0.7	-	ms	Figure 2.29
	LVD0 disabled*2		-	0.3	-		
Wait time after RES cancellation (during powered-on state)	LVD0 enabled*1	t_{RESWT2}	-	0.5	-	ms	Figure 2.30
	LVD0 disabled*2		-	0.05	-		
Internal reset cancellation time (Watchdog timer reset, SRAM parity error reset, Software reset)	LVD0 enabled*1	t_{RESWT3}	-	0.6	-	ms	
	LVD0 disabled*2		-	0.15	-		

Note 1. When OFS1.LVDAS = 0.
Note 2. When OFS1.LVDAS = 1.

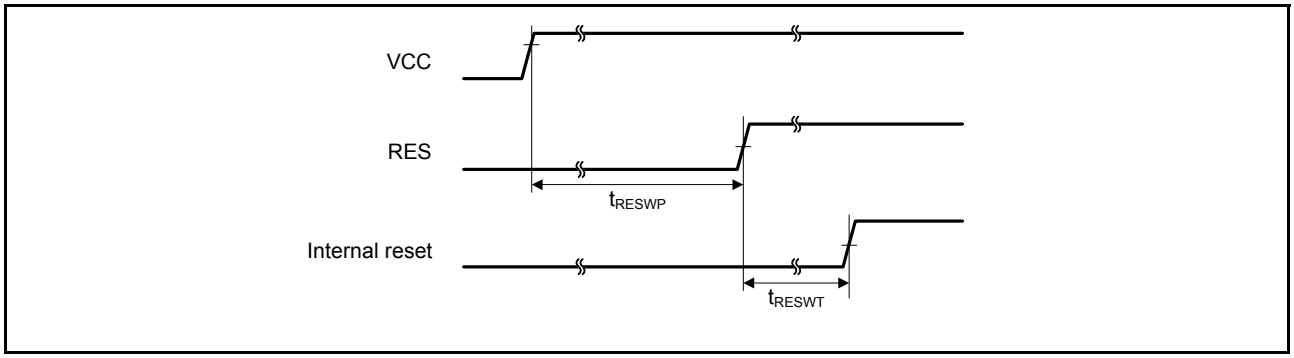

Figure 2.29 Reset input timing at power-on

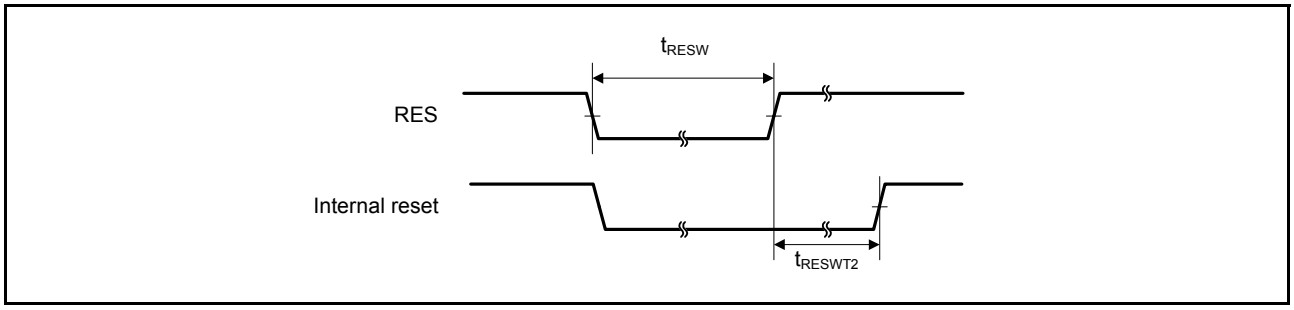

Figure 2.30 Reset input timing (1)

2.3.4 Wakeup Time

Table 2.23 Timing of recovery from low power modes (1)

Parameter				Symbol	Min	Typ	Max	Unit	Test conditions
Recovery time from Software Standby mode*1	High-speed mode	Crystal resonator connected to main clock oscillator	System clock source is main clock oscillator (20 MHz)*2	t_{SBYMC}	-	2	3	ms	Figure 2.31
		External clock input to main clock oscillator	System clock source is main clock oscillator (20 MHz)*3	t_{SBYEX}	-	14	25	μs	
		System clock source is HOCO*4 (HOCO clock is 32 MHz)		t_{SBYHO}	-	43	52	μs	
		System clock source is HOCO*4 (HOCO clock is 48 MHz)		t_{SBYHO}	-	44	52	μs	
		System clock source is HOCO*5 (HOCO clock is 64 MHz)		t_{SBYHO}	-	82	110	μs	
		System clock source is MOCO		t_{SBYMO}	-	16	25	μs	

Note 1. The division ratio of ICK and PCKx is the minimum division ratio within the allowable frequency range. The recovery time is determined by the system clock source.
Note 2. The Main Clock Oscillator Wait Control Register (MOSCWTCR) is set to 05h.
Note 3. The Main Clock Oscillator Wait Control Register (MOSCWTCR) is set to 00h.
Note 4. The HOCO clock wait control register (HOCOWTCR) is set to 05h.
Note 5. The HOCO clock wait control register (HOCOWTCR) is set to 06h.

Table 2.24 Timing of recovery from low power modes (2)

Parameter				Symbol	Min	Typ	Max	Unit	Test conditions
Recovery time from Software Standby mode*1	Middle-speed mode	Crystal resonator connected to main clock oscillator	System clock source is main clock oscillator (12 MHz)*2	t_{SBYMC}	-	2	3	ms	Figure 2.31
		External clock input to main clock oscillator	System clock source is main clock oscillator (12 MHz)*3	t_{SBYEX}	-	2.9	10	μs	
		System clock source is HOCO*4		t_{SBYHO}	-	38	50	μs	
		System clock source is MOCO		t_{SBYMO}	-	3.5	5.5	μs	

Note 1. The division ratio of ICK and PCKx is the minimum division ratio within the allowable frequency range. The recovery time is determined by the system clock source.
Note 2. The Main Clock Oscillator Wait Control Register (MOSCWTCR) is set to 05h.
Note 3. The Main Clock Oscillator Wait Control Register (MOSCWTCR) is set to 00h.
Note 4. The system clock is 12 MHz.

Table 2.25 Timing of recovery from low power modes (3)

Parameter				Symbol	Min	Typ	Max	Unit	Test conditions
Recovery time from Software Standby mode*1	Low-speed mode	Crystal resonator connected to main clock oscillator	System clock source is main clock oscillator (1 MHz)*2	t_{SBYMC}	-	2	3	ms	Figure 2.31
		External clock input to main clock oscillator	System clock source is main clock oscillator (1 MHz)*3	t_{SBYEX}	-	28	50	μs	
		System clock source is MOCO		t_{SBYMO}	-	25	35	μs	

Note 1. The division ratio of ICK and PCKx is the minimum division ratio within the allowable frequency range. The recovery time is determined by the system clock source.
Note 2. The Main Clock Oscillator Wait Control Register (MOSCWTCR) is set to 05h.
Note 3. The Main Clock Oscillator Wait Control Register (MOSCWTCR) is set to 00h.

Table 2.26 Timing of recovery from low power modes (4)

Parameter				Symbol	Min	Typ	Max	Unit	Test conditions
Recovery time from Software Standby mode*1	Low-voltage mode	Crystal resonator connected to main clock oscillator	System clock source is main clock oscillator (4 MHz)*2	t_{SBYMC}	-	2	3	ms	Figure 2.31
		External clock input to main clock oscillator	System clock source is main clock oscillator (4 MHz)*3	t_{SBYEX}	-	108	130	μs	
		System clock source is HOCO		t_{SBYHO}	-	108	130	μs	

Note 1. The division ratio of ICK and PCKx is the minimum division ratio within the allowable frequency range. The recovery time is determined by the system clock source.
Note 2. The Main Clock Oscillator Wait Control Register (MOSCWTCR) is set to 05h.
Note 3. The Main Clock Oscillator Wait Control Register (MOSCWTCR) is set to 00h.

Table 2.27 Timing of recovery from low power modes (5)

Parameter			Symbol	Min	Typ	Max	Unit	Test conditions
Recovery time from Software Standby mode*1	SubOSC-speed mode	System clock source is sub-clock oscillator (32.768 kHz)	t_{SBYSC}	-	0.85	1	ms	Figure 2.31
		System clock source is LOCO (32.768 kHz)	t_{SBYLO}	-	0.85	1.2	ms	

Note 1. The sub-clock oscillator or LOCO itself continues oscillating in Software Standby mode during Subosc-speed mode.

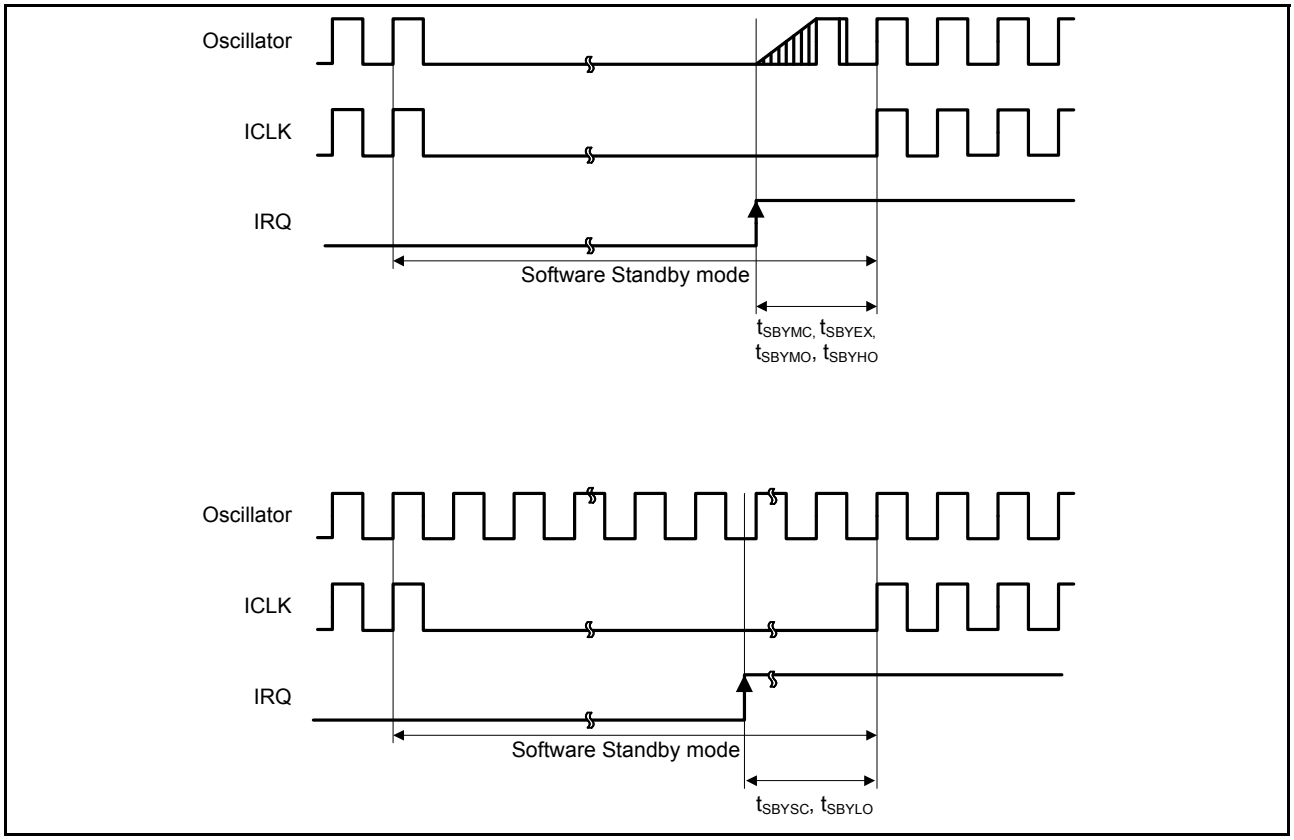

Figure 2.31 Software Standby mode cancellation timing

Table 2.28 Timing of recovery from low power modes (6)

Parameter		Symbol	Min	Typ	Max	Unit	Test conditions
Recovery time from Software Standby mode to Snooze mode	High-speed mode System clock source is HOCO	t_{SNZ}	-	36	45	μs	Figure 2.32
	Middle-speed mode System clock source is MOCO	t_{SNZ}	-	1.3	3.6	μs	
	Low-speed mode System clock source is MOCO	t_{SNZ}	-	10	13	μs	
	Low-voltage mode System clock source is HOCO	t_{SNZ}	-	87	110	μs	

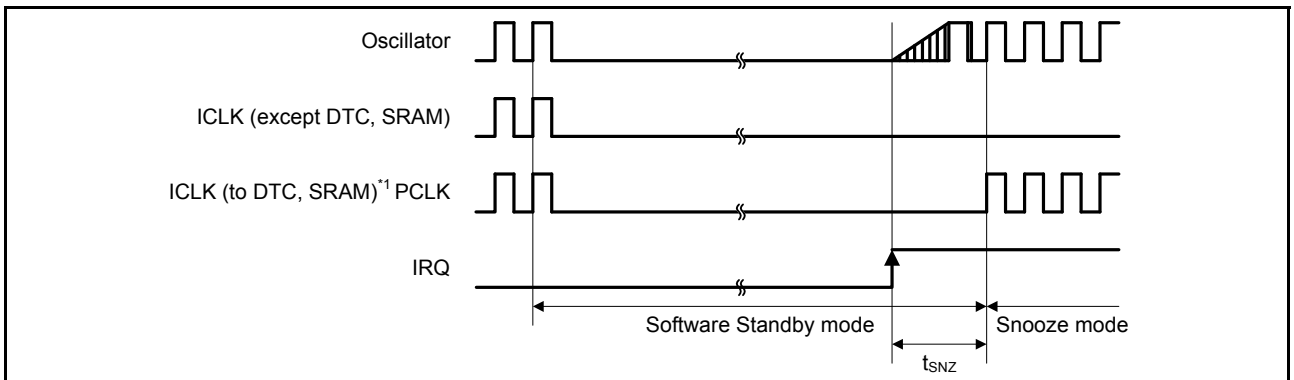

Note 1. When SNZCR.SNZDTCEN is set to 1, ICLK is supplied to DTC and SRAM.

Figure 2.32 Recovery timing from Software Standby mode to Snooze mode

2.3.5 NMI and IRQ Noise Filter

Table 2.29 NMI and IRQ noise filter

Parameter	Symbol	Min	Typ	Max	Unit	Test conditions	
NMI pulse width	t_{NMIW}	200	-	-	ns	NMI digital filter disabled	$t_{Pcyc} \times 2 \leq 200$ ns
		$t_{Pcyc} \times 2$*1	-	-			$t_{Pcyc} \times 2 > 200$ ns
		200	-	-		NMI digital filter enabled	$t_{NMICK} \times 3 \leq 200$ ns
		$t_{NMICK} \times 3.5$*2	-	-			$t_{NMICK} \times 3 > 200$ ns
IRQ pulse width	t_{IRQW}	200	-	-	ns	IRQ digital filter disabled	$t_{Pcyc} \times 2 \leq 200$ ns
		$t_{Pcyc} \times 2$*1	-	-			$t_{Pcyc} \times 2 > 200$ ns
		200	-	-		IRQ digital filter enabled	$t_{IRQCK} \times 3 \leq 200$ ns
		$t_{IRQCK} \times 3.5$*3	-	-			$t_{IRQCK} \times 3 > 200$ ns

Note: 200 ns minimum in Software Standby mode.
Note 1. t_{Pcyc} indicates the PCLKB cycle.
Note 2. t_{NMICK} indicates the cycle of the NMI digital filter sampling clock.
Note 3. t_{IRQCK} indicates the cycle of the IRQi digital filter sampling clock (i = 0 to 7).

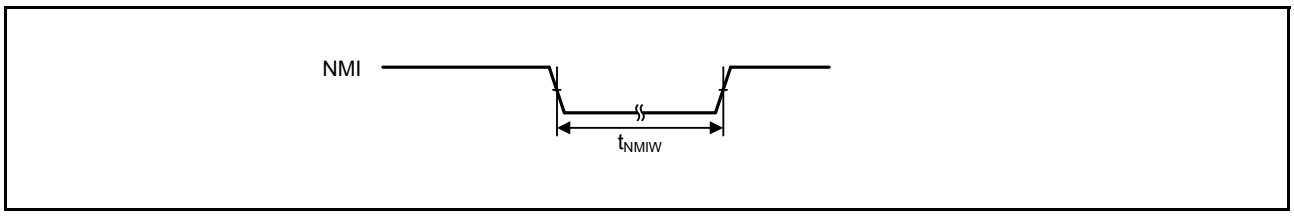

Figure 2.33 NMI interrupt input timing

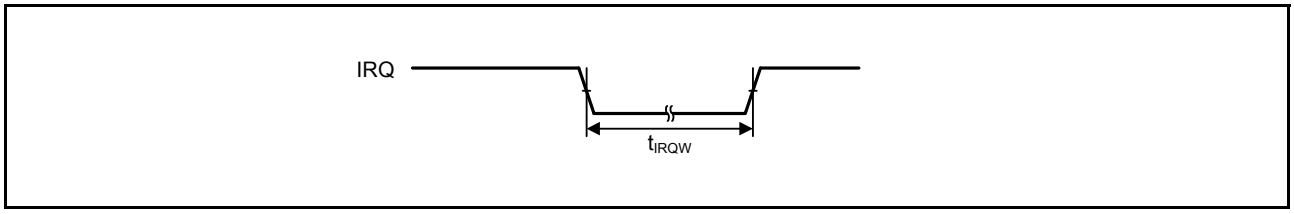

Figure 2.34 IRQ interrupt input timing

2.3.6 I/O Ports, POEG, GPT, AGT, KINT, and ADC14 Trigger Timing

Table 2.30 I/O Ports, POEG, GPT, AGT, KINT, and ADC14 trigger timing

Parameter			Symbol	Min	Max	Unit	Test conditions
I/O Ports	Input data pulse width		t_{PRW}	1.5	-	t_{Pcyc}	Figure 2.35
POEG	POEG input trigger pulse width		t_{POEW}	3	-	t_{Pcyc}	Figure 2.36
GPT	Input capture pulse width	Single edge	t_{GTICW}	1.5	-	t_{PDcyc}	Figure 2.37
		Dual edge		2.5	-		
AGT	AGTIO, AGTEE input cycle	2.7 V ≤ VCC ≤ 5.5 V	t_{ACYC}*1	250	-	ns	Figure 2.38
		2.4 V ≤ VCC < 2.7 V		500	-	ns	
		1.8 V ≤ VCC < 2.4 V		1000	-	ns	
		1.6 V ≤ VCC < 1.8 V		2000	-	ns	
	AGTIO, AGTEE input high level width, low-level width	2.7 V ≤ VCC ≤ 5.5 V	t_{ACKWH}, t_{ACKWL}	100	-	ns	
		2.4 V ≤ VCC < 2.7 V		200	-	ns	
		1.8 V ≤ VCC < 2.4 V		400	-	ns	
		1.6 V ≤ VCC < 1.8 V		800	-	ns	
	AGTIO, AGTO, AGTOA, AGTOB output cycle	2.7 V ≤ VCC ≤ 5.5 V	t_{ACYC2}	62.5	-	ns	Figure 2.38
		2.4 V ≤ VCC < 2.7 V		125	-	ns	
		1.8 V ≤ VCC < 2.4 V		250	-	ns	
		1.6 V ≤ VCC < 1.8 V		500	-	ns	
ADC14	14-bit A/D converter trigger input pulse width		t_{TRGW}	1.5	-	t_{Pcyc}	Figure 2.39
KINT	KRn (n = 00 to 07) pulse width		t_{KR}	250	-	ns	Figure 2.40

Note: tPcyc: PCLKB cycle, tPDcyc: PCLKD cycle.
Note 1. Constraints on AGTIO input: t_{Pcyc} × 2 (t_{Pcyc}: PCLKB cycle) < t_{ACYC}.

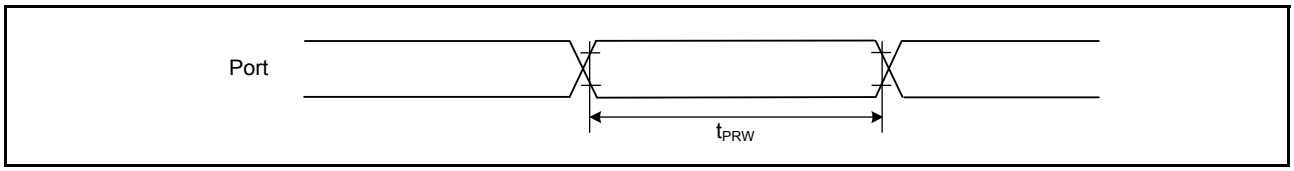

Figure 2.35 I/O ports input timing

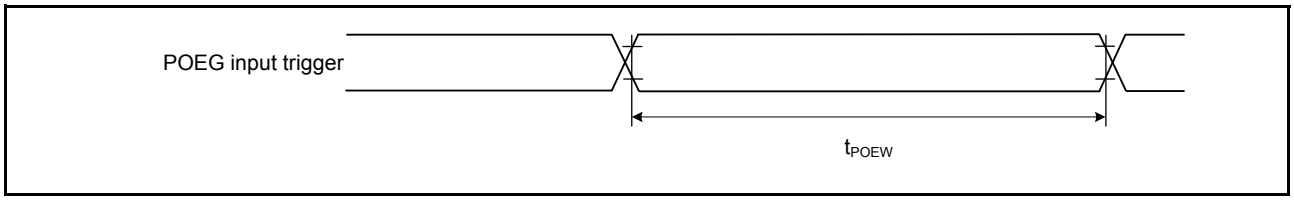

Figure 2.36 POEG input trigger timing

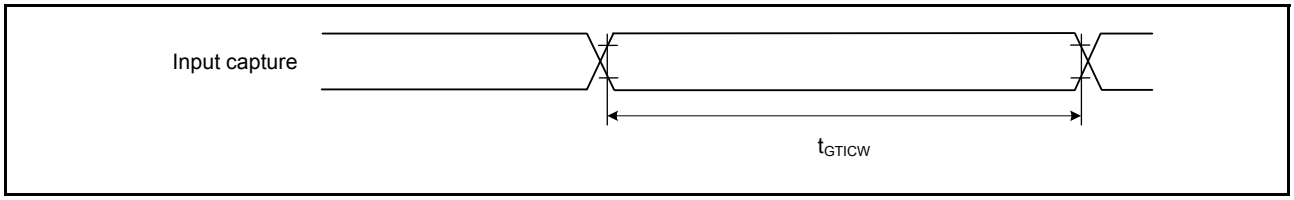

Figure 2.37 GPT input capture timing

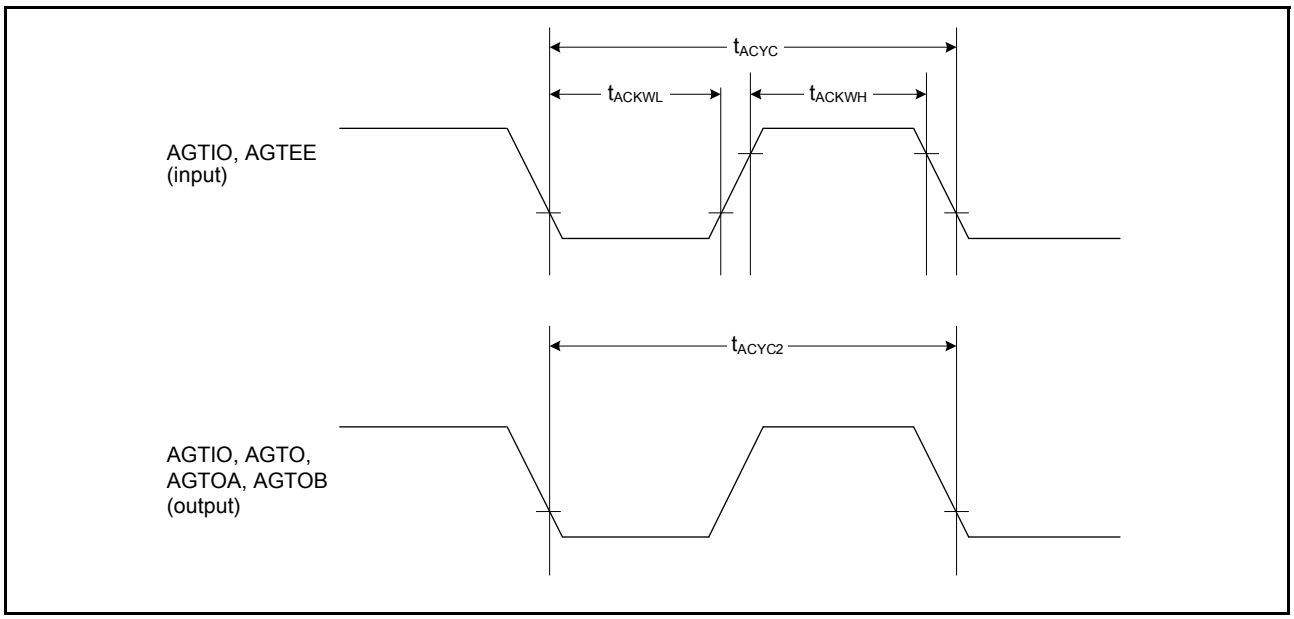

Figure 2.38 AGT I/O timing

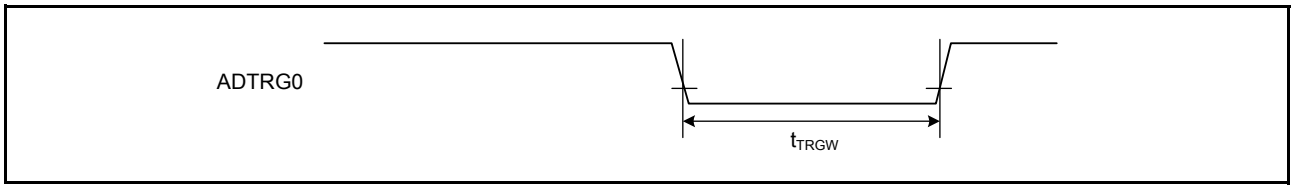

Figure 2.39 ADC14 trigger input timing

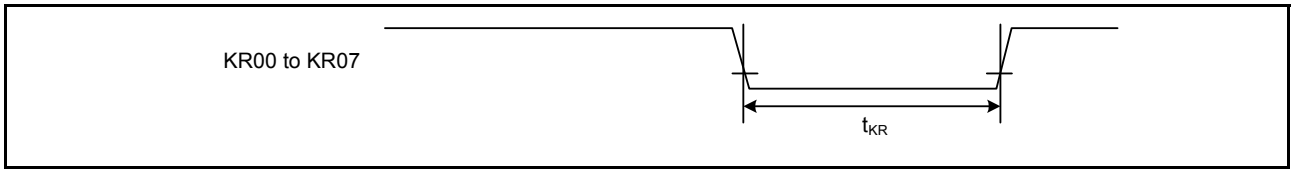

Figure 2.40 Key interrupt input timing

2.3.7 CAC Timing

Table 2.31 CAC timing

Parameter			Symbol	Min	Typ	Max	Unit	Test conditions
CAC	CACREF input pulse width	$t_{PBcyc} \leq tcac$*2	t_{CACREF}	$4.5 \times t_{cac} + 3 \times t_{PBcyc}$	-	-	ns	-
		$t_{PBcyc} > tcac$*2		$5 \times t_{cac} + 6.5 \times t_{PBcyc}$	-	-	ns	

Note 1. t_{PBcyc}: PCLKB cycle.

Note 2. t_{cac}: CAC count clock source cycle.

2.3.8 SCI Timing

Table 2.32 SCI timing (1)
Conditions: VCC = AVCC0 = 1.6 to 5.5 V

Parameter				Symbol	Min	Max	Unit*1	Test conditions
SCI	Input clock cycle	Asynchronous		t_{Scyc}	4	-	t_{Pcyc}	Figure 2.41
		Clock synchronous			6	-		
	Input clock pulse width			t_{SCKW}	0.4	0.6	t_{Scyc}	
	Input clock rise time			t_{SCKr}	-	20	ns	
	Input clock fall time			t_{SCKf}	-	20	ns	
	Output clock cycle	Asynchronous		t_{Scyc}	6	-	t_{Pcyc}	
		Clock synchronous			4	-		
	Output clock pulse width			t_{SCKW}	0.4	0.6	t_{Scyc}	
	Output clock rise time		1.8V or above	t_{SCKr}	-	20	ns	
			1.6V or above		-	30		
	Output clock fall time		1.8V or above	t_{SCKf}	-	20	ns	
			1.6V or above		-	30		
	Transmit data delay (master)	Clock synchronous	1.8V or above	t_{TXD}	-	40	ns	Figure 2.42
			1.6V or above		-	45		
	Transmit data delay (slave)	Clock synchronous	2.7V or above		-	55	ns	
			2.4V or above		-	60		
			1.8V or above		-	100		
			1.6V or above		-	125		
	Receive data setup time (master)	Clock synchronous	2.7V or above	t_{RXS}	45	-	ns	
			2.4V or above		55	-		
			1.8V or above		90	-		
			1.6V or above		110	-		
	Receive data setup time (slave)	Clock synchronous	2.7V or above		40	-	ns	
			1.6V or above		45	-		
	Receive data hold time (master)	Clock synchronous		t_{RXH}	5	-	ns	
	Receive data hold time (slave)	Clock synchronous		t_{RXH}	40	-	ns	

Note 1. t_{Pcyc}: PCLKB cycle.

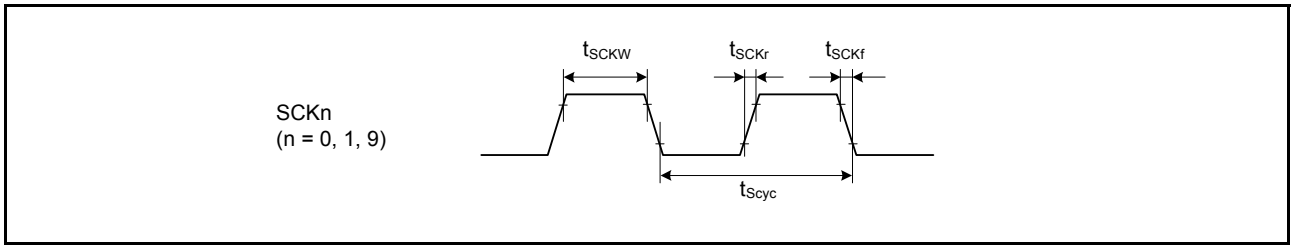

Figure 2.41 SCK clock input timing

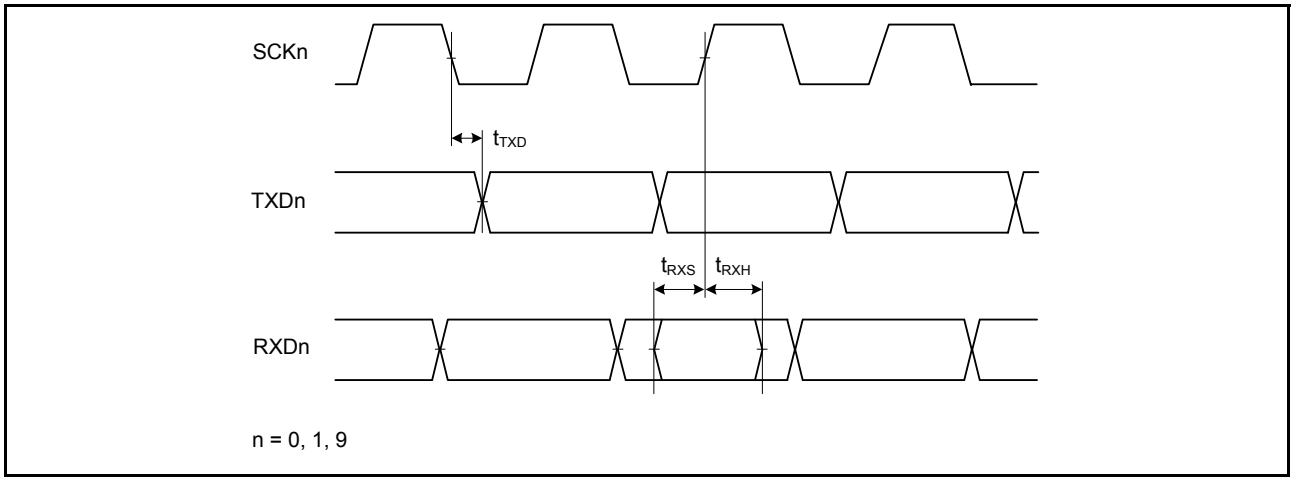

Figure 2.42 SCI input/output timing in clock synchronous mode

Table 2.33 SCI timing (2)
Conditions: VCC = AVCC0 = 1.6 to 5.5 V

Parameter				Symbol	Min	Max	Unit*1	Test conditions
Simple SPI	SCK clock cycle output (master)			t_{SPcyc}	4	65536	t_{Pcyc}	Figure 2.43
	SCK clock cycle input (slave)				6	65536		
	SCK clock high pulse width			t_{SPCKWH}	0.4	0.6	t_{SPcyc}	
	SCK clock low pulse width			t_{SPCKWL}	0.4	0.6	t_{SPcyc}	
	SCK clock rise and fall time		1.8V or above	t_{SPCKr}, t_{SPCKf}	-	20	ns	
			1.6V or above		-	30		
	Data input setup time	Master	2.7V or above	t_{SU}	45	-	ns	Figure 2.44 to Figure 2.47
			2.4V or above		55	-		
			1.8V or above		80	-		
			1.6V or above		110	-		
		Slave	2.7V or above		40	-		
			1.6V or above		45	-		
	Data input hold time	Master		t_H	33.3	-	ns	
		Slave			40	-		
	SS input setup time			t_{LEAD}	1	-	t_{SPcyc}	
	SS input hold time			t_{LAG}	1	-	t_{SPcyc}	
	Data output delay	Master	1.8V or above	t_{OD}	-	40	ns	
			1.6V or above		-	50		
		Slave	2.4V or above		-	65		
			1.8V or above		-	100		
			1.6V or above		-	125		
	Data output hold time	Master	2.7V or above	t_{OH}	–10	-	ns	
			2.4V or above		–20	-		
			1.8V or above		–30	-		
			1.6V or above		–40	-		
		Slave			–10	-		
	Data rise and fall time	Master	1.8V or above	t_{Dr}, t_{Df}	-	20	ns	
			1.6V or above		-	30		
		Slave	1.8V or above		-	20		
			1.6V or above		-	30		
Simple SPI	Slave access time			t_{SA}	-	6	t_{Pcyc}	Figure 2.47
	Slave output release time			t_{REL}	-	6	t_{Pcyc}	

Note 1. t_{Pcyc}: PCLKB cycle

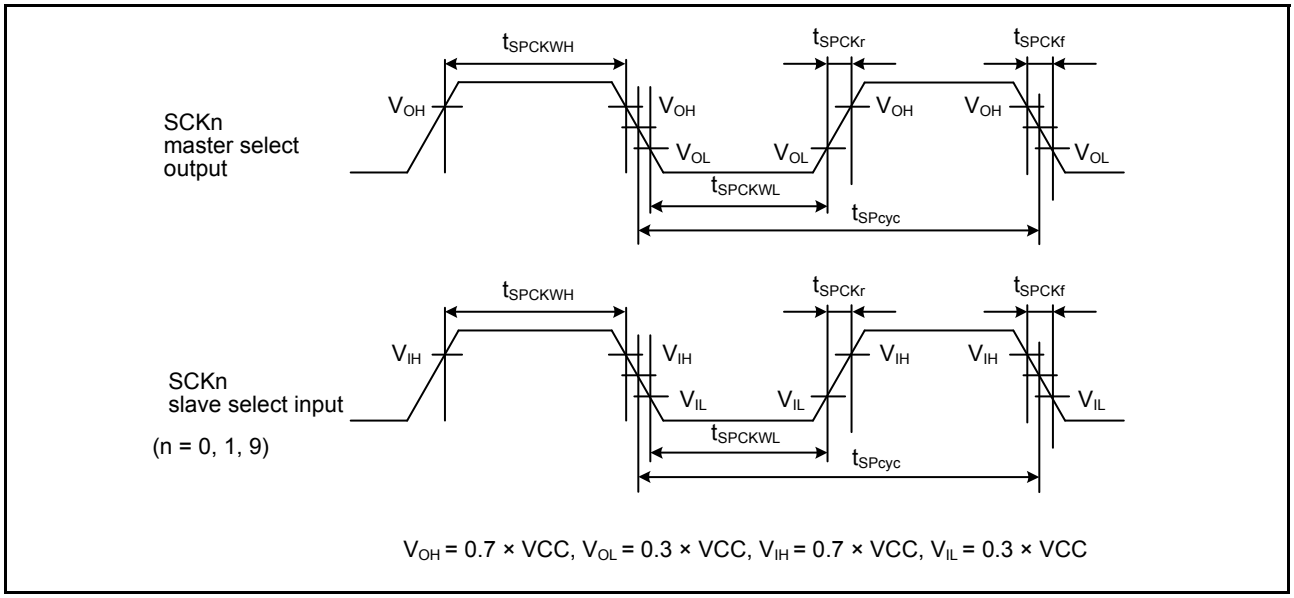

Figure 2.43 SCI simple SPI mode clock timing

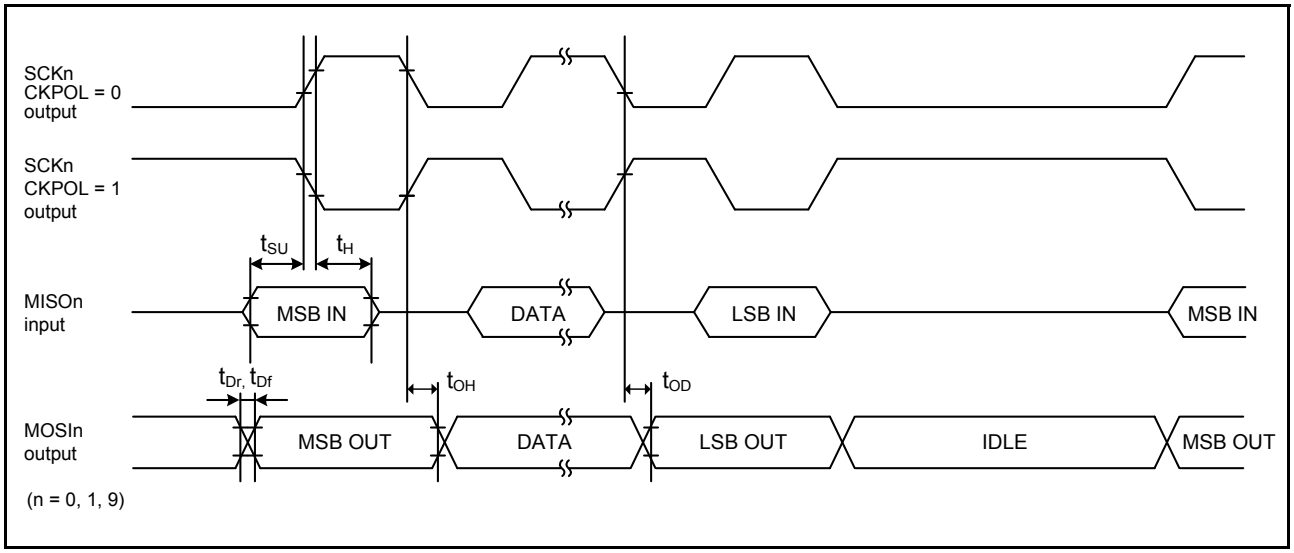

Figure 2.44 SCI simple SPI mode timing (master, CKPH = 1)

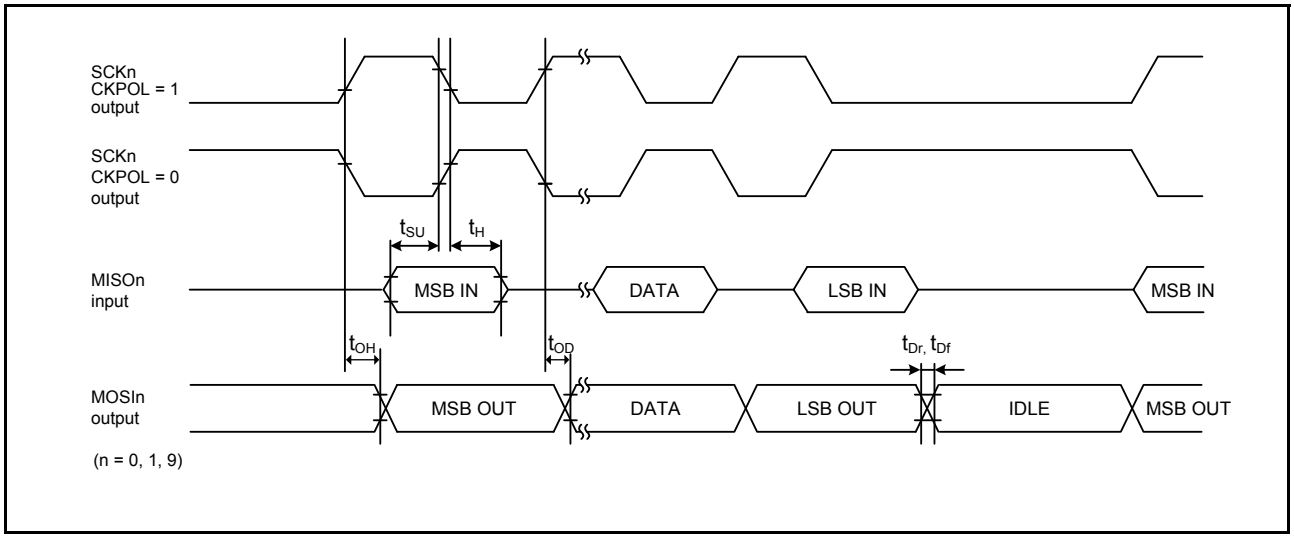

Figure 2.45 SCI simple SPI mode timing (master, CKPH = 0)

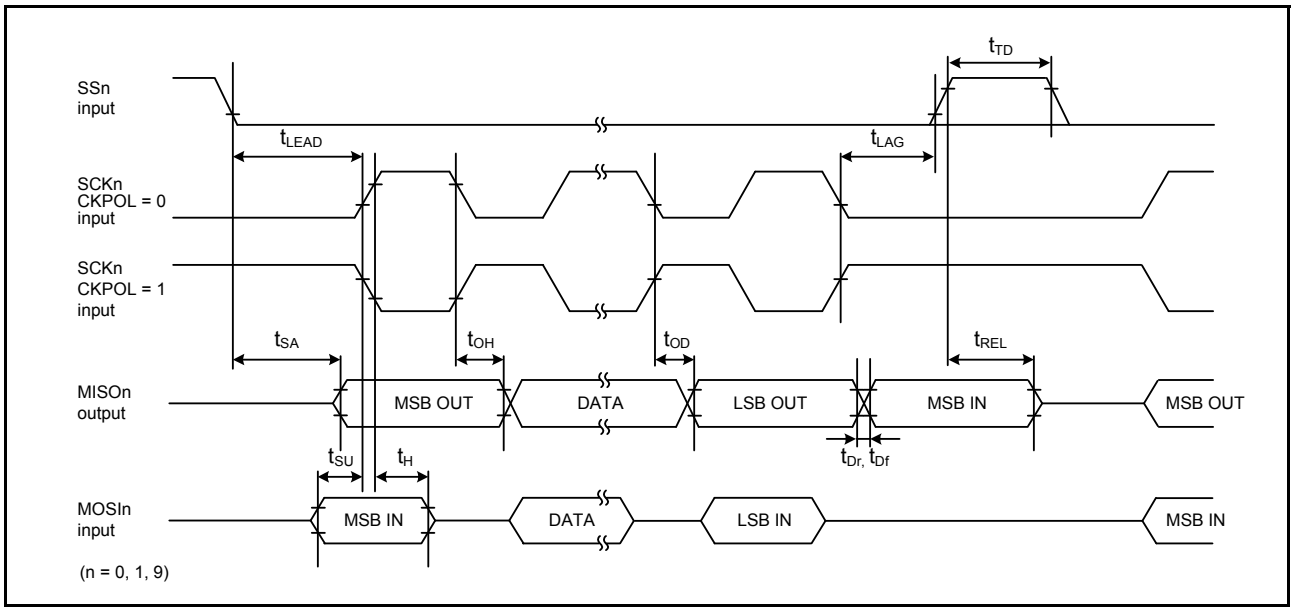

Figure 2.46 SCI simple SPI mode timing (slave, CKPH = 1)

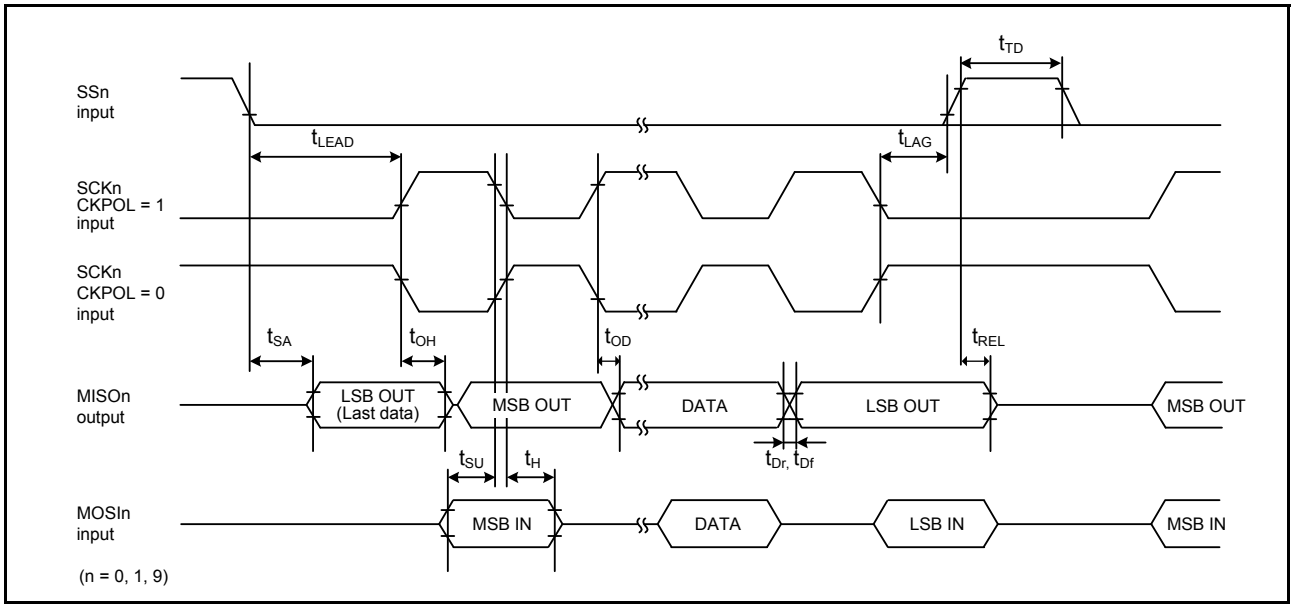

Figure 2.47 SCI simple SPI mode timing (slave, CKPH = 0)

Table 2.34 SCI timing (3)

Conditions: VCC = AVCC0 = 2.7 to 5.5 V

Parameter		Symbol	Min	Max	Unit	Test conditions
Simple IIC (Standard mode)	SDA input rise time	t_{Sr}	-	1000	ns	Figure 2.48
	SDA input fall time	t_{Sf}	-	300	ns	
	SDA input spike pulse removal time	t_{SP}	0	4 × t_{IICcyc}	ns	
	Data input setup time	t_{SDAS}	250	-	ns	
	Data input hold time	t_{SDAH}	0	-	ns	
	SCL, SDA capacitive load	C_b*1	-	400	pF	
Simple IIC*2 (Fast mode)	SDA input rise time	t_{Sr}	-	300	ns	Figure 2.48
	SDA input fall time	t_{Sf}	-	300	ns	
	SDA input spike pulse removal time	t_{SP}	0	4 × t_{IICcyc}	ns	
	Data input setup time	t_{SDAS}	100	-	ns	
	Data input hold time	t_{SDAH}	0	-	ns	
	SCL, SDA capacitive load	C_b*1	-	400	pF	

Note: t_{IICcyc}: Clock cycle selected by the SMR.CKS[1:0] bits.

Note 1. Cb indicates the total capacity of the bus line.

Note 2. Middle drive output is selected in the Port Drive Capability bit in the PmnPFS register.

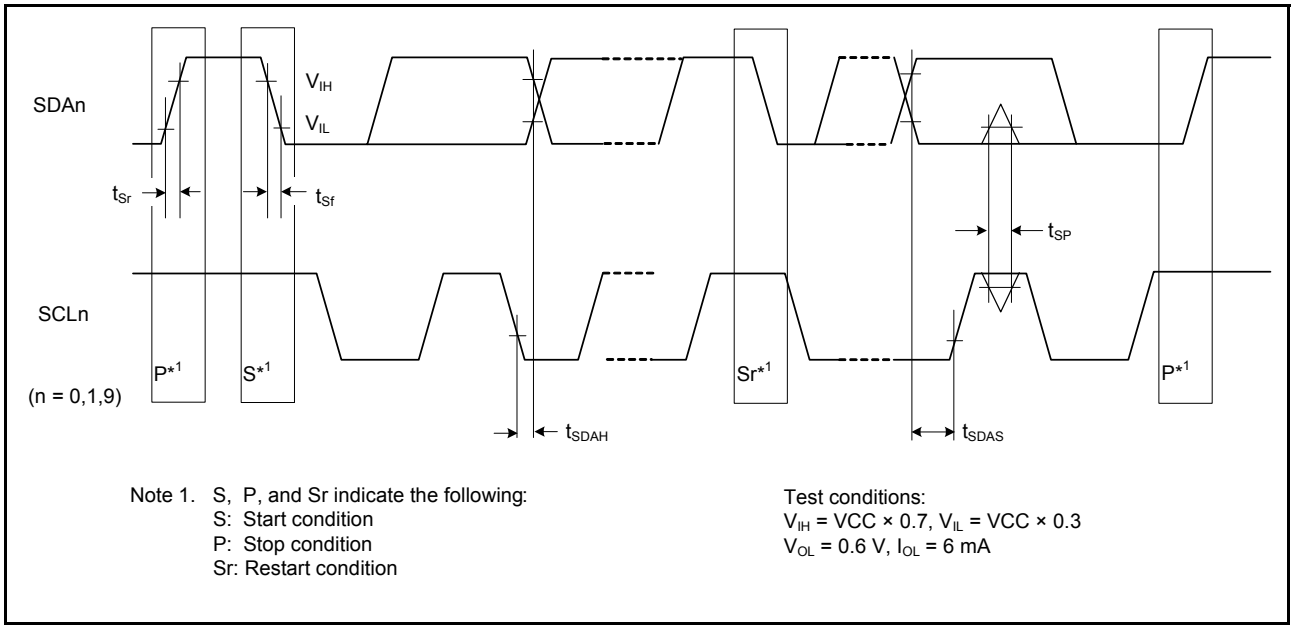

Figure 2.48 SCI simple IIC mode timing

2.3.9 SPI Timing

Table 2.35 SPI timing (1 of 2)

Conditions: Middle drive output is selected in the Port Drive Capability bit in the PmnPFS register.

Parameter				Symbol	Min	Max	Unit*1	Test conditions
SPI	RSPCK clock cycle	Master		t_{SPcyc}	2	4096	t_{Pcyc}	Figure 2.49 C = 30pF
		Slave			6	4096		
	RSPCK clock high pulse width	Master		t_{SPCKWH}	$(t_{SPcyc} - t_{SPCKr} - t_{SPCKf}) / 2 - 3$	-	ns	
		Slave			$3 \times t_{Pcyc}$	-		
	RSPCK clock low pulse width	Master		t_{SPCKWL}	$(t_{SPcyc} - t_{SPCKr} - t_{SPCKf}) / 2 - 3$	-	ns	
		Slave			$3 \times t_{Pcyc}$	-		
	RSPCK clock rise and fall time	Output	2.7V or above	t_{SPCKr}, t_{SPCKf}	-	10	ns	
			2.4V or above		-	15		
			1.8V or above		-	20		
			1.6V or above		-	30		
		Input			-	1	μs	
	Data input setup time	Master		t_{SU}	10	-	ns	Figure 2.50 to Figure 2.55 C = 30pF
		Slave	2.4V or above		10	-		
			1.8V or above		15	-		
			1.6V or above		20	-		
	Data input hold time	Master (RSPCK is PCLKB/2)		t_{HF}	0	-	ns	
		Master (RSPCK is not PCLKB/2)		t_H	t_{Pcyc}	-		
		Slave		t_H	20	-		
	SSL setup time	Master		t_{LEAD}	$-30 + N \times t_{Spcyc}$*2	-	ns	
		Slave			$6 \times t_{Pcyc}$	-	ns	
	SSL hold time	Master		t_{LAG}	$-30 + N \times t_{Spcyc}$*3	-	ns	
		Slave			$6 \times t_{Pcyc}$	-	ns	

Table 2.35 SPI timing (2 of 2)

Conditions: Middle drive output is selected in the Port Drive Capability bit in the PmnPFS register.

Parameter				Symbol	Min	Max	Unit*1	Test conditions
SPI	Data output delay	Master	2.7V or above	t_{OD}	-	14	ns	Figure 2.50 to Figure 2.55 C = 30pF
			2.4V or above		-	20		
			1.8V or above		-	25		
			1.6V or above		-	30		
		Slave	2.7V or above		-	50		
			2.4V or above		-	60		
			1.8V or above		-	85		
			1.6V or above		-	110		
	Data output hold time	Master		t_{OH}	0	-	ns	
		Slave			0	-		
	Successive transmission delay	Master		t_{TD}	t_{SPcyc} + 2 × t_{Pcyc}	8 × t_{SPcyc} + 2 × t_{Pcyc}	ns	
		Slave			6 × t_{Pcyc}	-		
	MOSI and MISO rise and fall time	Output	2.7V or above	t_{Dr}, t_{Df}	-	10	ns	
			2.4V or above		-	15		
			1.8V or above		-	20		
			1.6V or above		-	30		
		Input			-	1	μs	
	SSL rise and fall time	Output	2.7V or above	t_{SSLr}, t_{SSLf}	-	10	ns	
			2.4V or above		-	15		
			1.8V or above		-	20		
			1.6V or above		-	30		
		Input			-	1	μs	
	Slave access time		2.4V or above	t_{SA}	-	2 × t_{Pcyc} +100	ns	Figure 2.54 and Figure 2.55 C = 30pF
			1.8V or above		-	2 × t_{Pcyc} +140		
			1.6V or above		-	2 × t_{Pcyc} +180		
	Slave output release time		2.4V or above	t_{REL}	-	2 × t_{Pcyc} +100	ns	
			1.8V or above		-	2 × t_{Pcyc} +140		
			1.6V or above		-	2 × t_{Pcyc} +180		

Note 1. t_{Pcyc}: PCLKB cycle.

Note 2. N is set as an integer from 1 to 8 by the SPCKD register.

Note 3. N is set as an integer from 1 to 8 by the SSLND register.

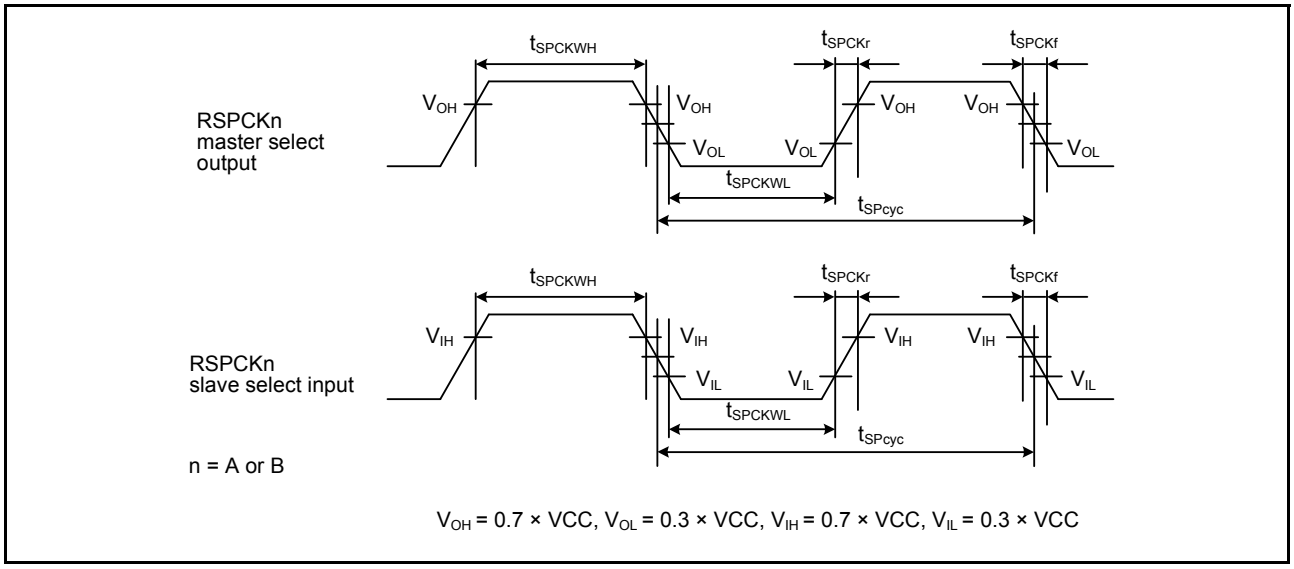

Figure 2.49 SPI clock timing

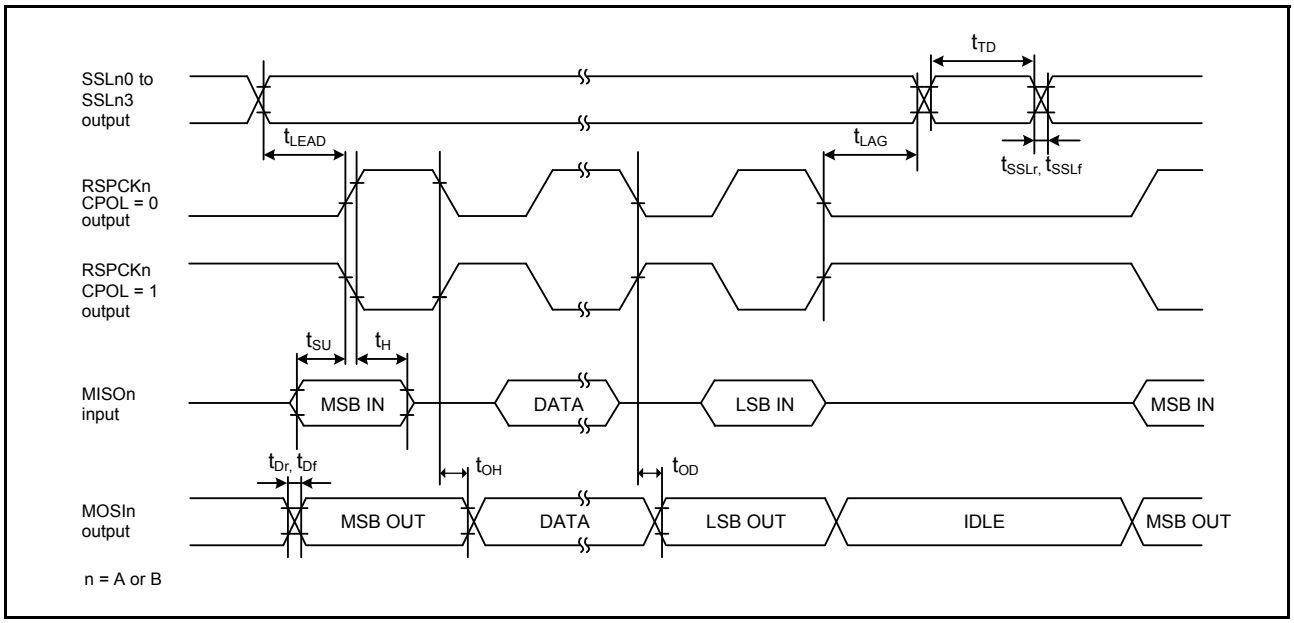

Figure 2.50 SPI timing (master, CPHA = 0) (bit rate: PCLKB division ratio is set to any value other than 1/2)

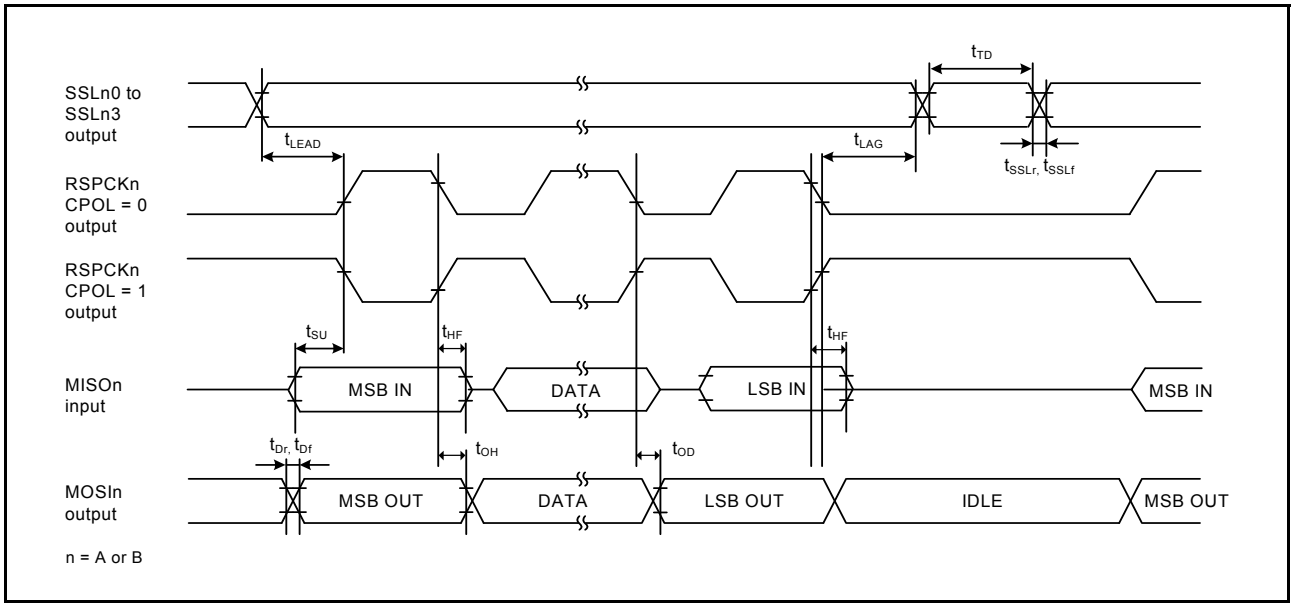

Figure 2.51 SPI timing (master, CPHA = 0) (bit rate: PCLKB division ratio is set to 1/2)

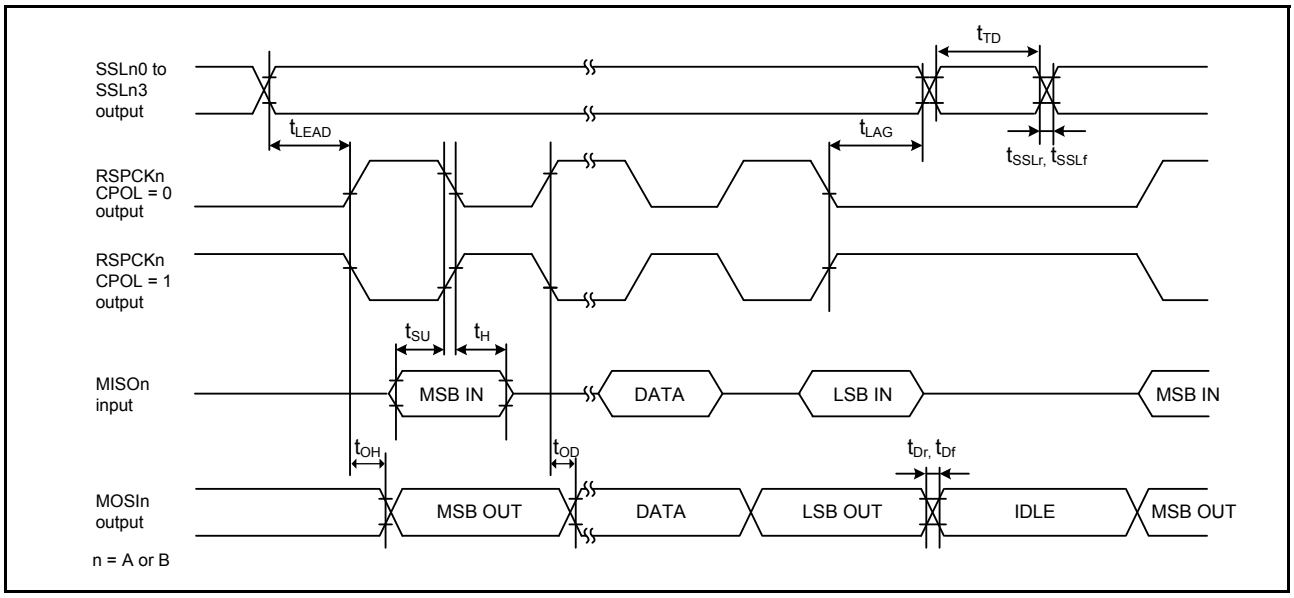

Figure 2.52 SPI timing (master, CPHA = 1) (bit rate: PCLKB division ratio is set to any value other than 1/2)

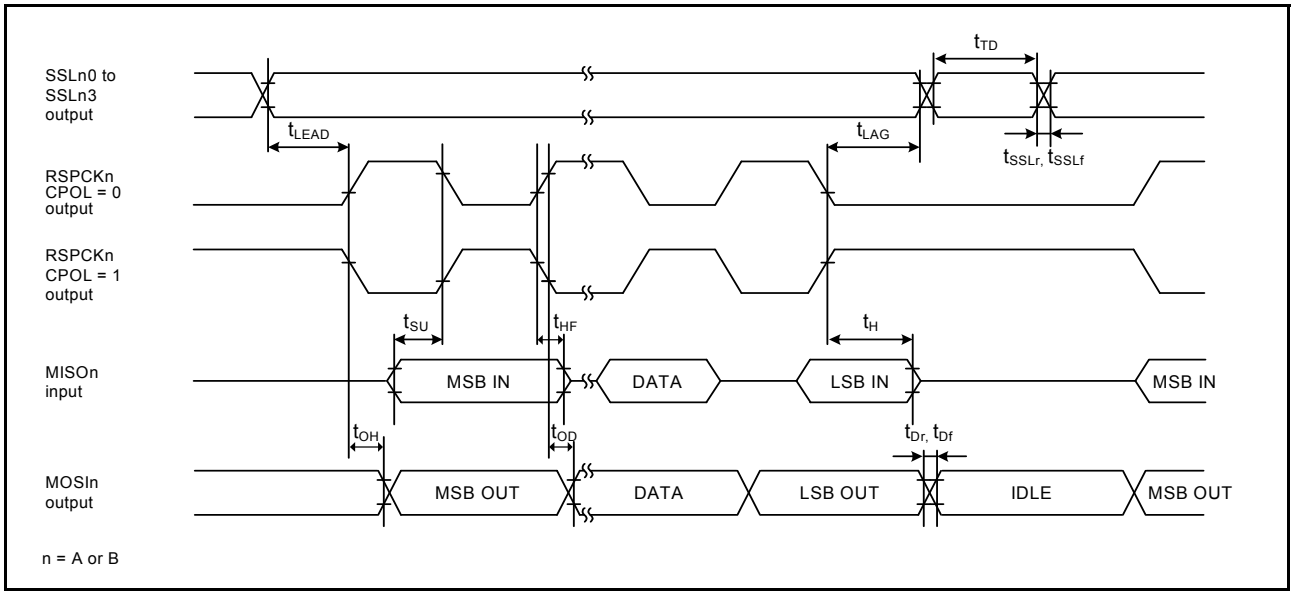

Figure 2.53 SPI timing (master, CPHA = 1) (bit rate: PCLKB division ratio is set to 1/2)

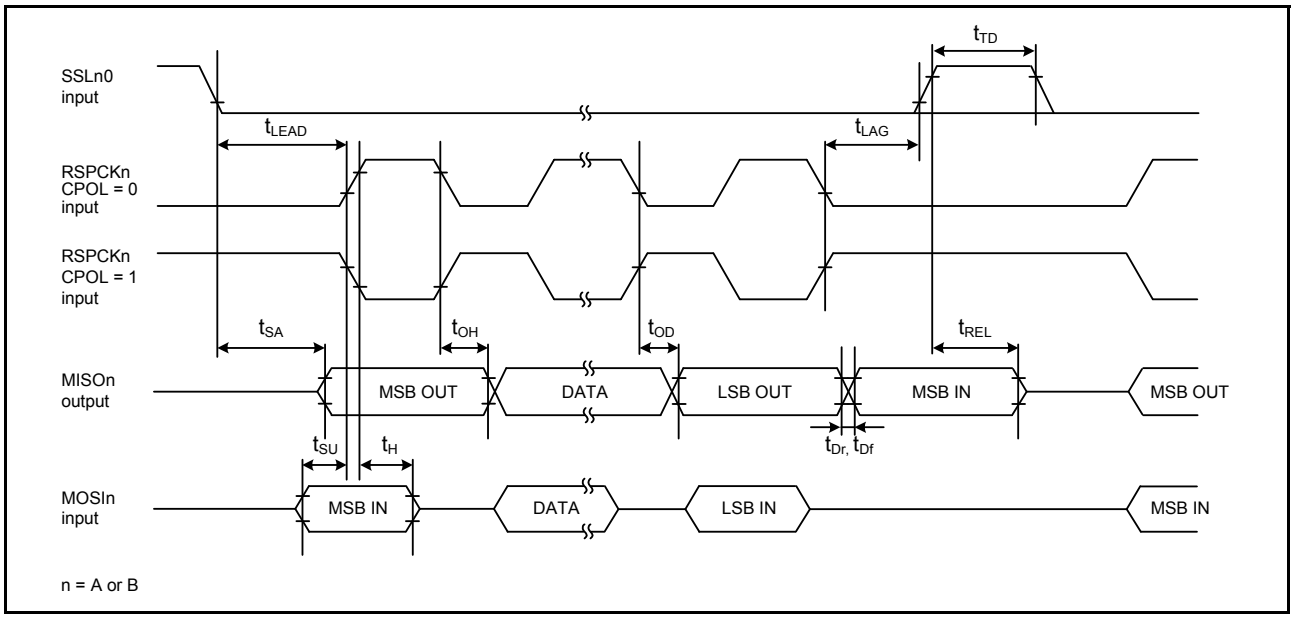

Figure 2.54 SPI timing (slave, CPHA = 0)

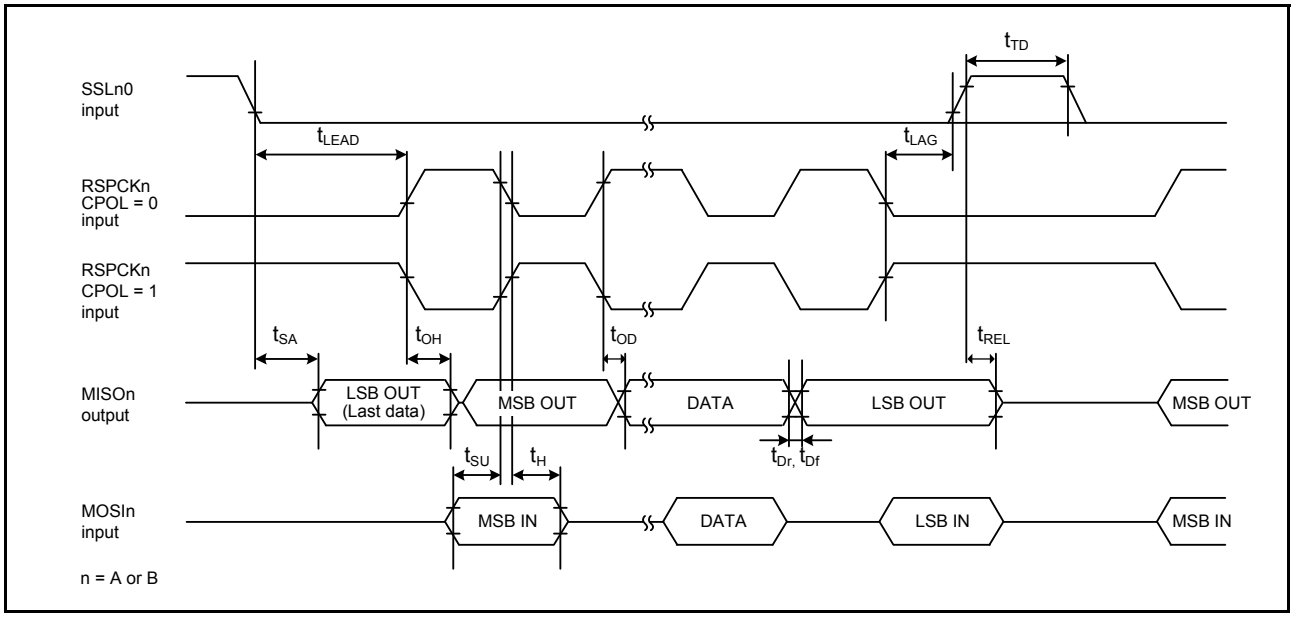

Figure 2.55 SPI timing (slave, CPHA = 1)

2.3.10 IIC Timing

Table 2.36 IIC timing
Conditions: VCC = AVCC0 = 2.7 to 5.5 V

Parameter		Symbol	Min*1	Max	Unit	Test conditions
IIC (standard mode, SMBus)	SCL input cycle time	t_{SCL}	6 (12) × t_{IICcyc} + 1300	-	ns	Figure 2.56
	SCL input high pulse width	t_{SCLH}	3 (6) × t_{IICcyc} + 300	-	ns	
	SCL input low pulse width	t_{SCLL}	3 (6) × t_{IICcyc} + 300	-	ns	
	SCL, SDA input rise time	t_{Sr}	-	1000	ns	
	SCL, SDA input fall time	t_{Sf}	-	300	ns	
	SCL, SDA input spike pulse removal time	t_{SP}	0	1 (4) × t_{IICcyc}	ns	
	SDA input bus free time (When wakeup function is disabled)	t_{BUF}	3 (6) × t_{IICcyc} + 300	-	ns	
	SDA input bus free time (When wakeup function is enabled)	t_{BUF}	3 (6) × t_{IICcyc} + 4 × t_{Pcyc} + 300	-	ns	
	START condition input hold time (When wakeup function is disabled)	t_{STAH}	t_{IICcyc} + 300	-	ns	
	START condition input hold time (When wakeup function is enabled)	t_{STAH}	1 (5) × t_{IICcyc} + t_{Pcyc} + 300	-	ns	
	Repeated START condition input setup time	t_{STAS}	1000	-	ns	
	STOP condition input setup time	t_{STOS}	1000	-	ns	
	Data input setup time	t_{SDAS}	t_{IICcyc} + 50	-	ns	
	Data input hold time	t_{SDAH}	0	-	ns	
	SCL, SDA capacitive load	C_b	-	400	pF	
IIC*2 (Fast mode)	SCL input cycle time	t_{SCL}	6 (12) × t_{IICcyc} + 600	-	ns	Figure 2.56
	SCL input high pulse width	t_{SCLH}	3 (6) × t_{IICcyc} + 300	-	ns	
	SCL input low pulse width	t_{SCLL}	3 (6) × t_{IICcyc} + 300	-	ns	
	SCL, SDA input rise time	t_{Sr}	-	300	ns	
	SCL, SDA input fall time	t_{Sf}	-	300	ns	
	SCL, SDA input spike pulse removal time	t_{SP}	0	1 (4) × t_{IICcyc}	ns	
	SDA input bus free time (When wakeup function is disabled)	t_{BUF}	3 (6) × t_{IICcyc} + 300	-	ns	
	SDA input bus free time (When wakeup function is enabled)	t_{BUF}	3 (6) × t_{IICcyc} + 4 × t_{Pcyc} + 300	-	ns	
	START condition input hold time (When wakeup function is disabled)	t_{STAH}	t_{IICcyc} + 300	-	ns	
	START condition input hold time (When wakeup function is enabled)	t_{STAH}	1(5) × t_{IICcyc} + t_{Pcyc} + 300	-	ns	
	Repeated START condition input setup time	t_{STAS}	300	-	ns	
	STOP condition input setup time	t_{STOS}	300	-	ns	
	Data input setup time	t_{SDAS}	t_{IICcyc} + 50	-	ns	
	Data input hold time	t_{SDAH}	0	-	ns	
	SCL, SDA capacitive load	C_b	-	400	pF	

Note: t_{IICcyc}: IIC internal reference clock (IICφ) cycle, t_{Pcyc}: PCLKB cycle

Note 1. Values in parentheses apply when ICMR3.NF[1:0] is set to 11b while the digital filter is enabled with ICFER.NFE set to 1.

Note 2. Middle drive output is selected in the Port Drive Capability bit in the PmnPFS register.

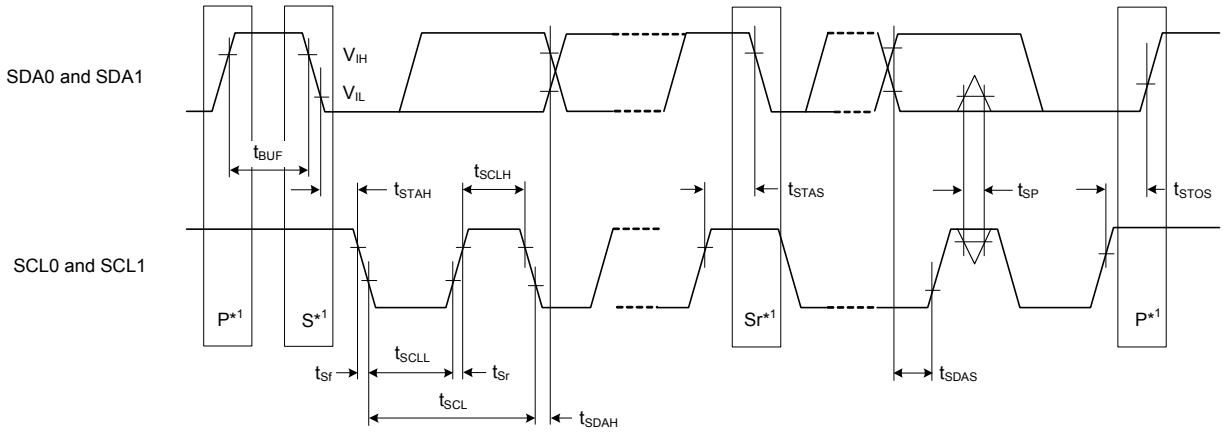

Note 1. S, P, and Sr indicate the following conditions.
S: Start condition
P: Stop condition
Sr: Restart condition

Figure 2.56 I²C bus interface input/output timing

2.3.11 CLKOUT Timing

Table 2.37 CLKOUT timing

Parameter			Symbol	Min	Max	Unit*1	Test conditions
CLKOUT	CLKOUT pin output cycle*1	VCC = 2.7 V or above	t_{Ccyc}	62.5	-	ns	Figure 2.57
		VCC = 1.8 V or above		125	-		
		VCC = 1.6 V or above		250	-		
	CLKOUT pin high pulse width*2	VCC = 2.7 V or above	t_{CH}	15	-	ns	
		VCC = 1.8 V or above		30	-		
		VCC = 1.6 V or above		150	-		
	CLKOUT pin low pulse width*2	VCC = 2.7 V or above	t_{CL}	15	-	ns	
		VCC = 1.8 V or above		30	-		
		VCC = 1.6 V or above		150	-		
	CLKOUT pin output rise time	VCC = 2.7 V or above	t_{Cr}	-	12	ns	
		VCC = 1.8 V or above		-	25		
		VCC = 1.6 V or above		-	50		
	CLKOUT pin output fall time	VCC = 2.7 V or above	t_{Cf}	-	12	ns	
		VCC = 1.8 V or above		-	25		
		VCC = 1.6 V or above		-	50		

Note 1. When the EXTAL external clock input or an oscillator is used with division by 1 (the CKOCR.CKOSEL[2:0] bits are 011b and the CKOCR.CKODIV[2:0] bits are 000b) to output from CLKOUT, the above should be satisfied with an input duty cycle of 45 to 55%.

Note 2. When the MOCO is selected as the clock output source (the CKOCR.CKOSEL[2:0] bits are 001b), set the clock output division ratio selection to be divided by 2 (the CKOCR.CKODIV[2:0] bits are 001b).

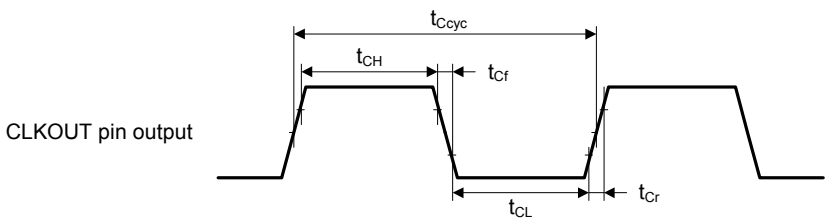

Test conditions: V_{OH} = VCC × 0.7, V_{OL} = VCC × 0.3, I_{OH} = -1.0 mA, I_{OL} = 1.0 mA, C = 30 pF

Figure 2.57 CLKOUT output timing

2.4 USB Characteristics

2.4.1 USBFS Timing

Table 2.38 USB characteristics

Conditions: VCC = AVCC0 = VCC_USB = 3.0 to 3.6V, Ta = –20 to +85°C

Parameter			Symbol	Min	Max	Unit	Test conditions
Input characteristics	Input high level voltage		V_{IH}	2.0	-	V	-
	Input low level voltage		V_{IL}	-	0.8	V	-
	Differential input sensitivity		V_{DI}	0.2	-	V	| USB_DP – USB_DM |
	Differential common mode range		V_{CM}	0.8	2.5	V	-
Output characteristics	Output high level voltage		V_{OH}	2.8	VCC_USB	V	I_{OH} = –200 μA
	Output low level voltage		V_{OL}	0.0	0.3	V	I_{OL}= 2 mA
	Cross-over voltage		V_{CRS}	1.3	2.0	V	Figure 2.58, Figure 2.59, Figure 2.60
	Rise time	FS	t_r	4	20	ns	
		LS		75	300		
	Fall time	FS	t_f	4	20	ns	
		LS		75	300		
	Rise/fall time ratio	FS	t_r/t_f	90	111.11	%	
		LS		80	125		
	Output resistance		Z_{DRV}	28	44	Ω	(Adjusting the resistance of external elements is not necessary.)
VBUS characteristics	VBUS input voltage		V_{IH}	VCC × 0.8	-	V	-
			V_{IL}	-	VCC × 0.2	V	-
Pull-up, pull-down	Pull-down resistor		R_{PD}	14.25	24.80	kΩ	-
	Pull-up resistor		R_{PUI}	0.9	1.575	kΩ	During idle state
			R_{PUA}	1.425	3.09	kΩ	During reception
Battery Charging Specification Ver 1.2	D + sink current		I_{DP_SINK}	25	175	μA	-
	D – sink current		I_{DM_SINK}	25	175	μA	-
	DCD source current		I_{DP_SRC}	7	13	μA	-
	Data detection voltage		V_{DAT_REF}	0.25	0.4	V	-
	D + source voltage		V_{DP_SRC}	0.5	0.7	V	Output current = 250 μA
	D – source voltage		V_{DM_SRC}	0.5	0.7	V	Output current = 250 μA

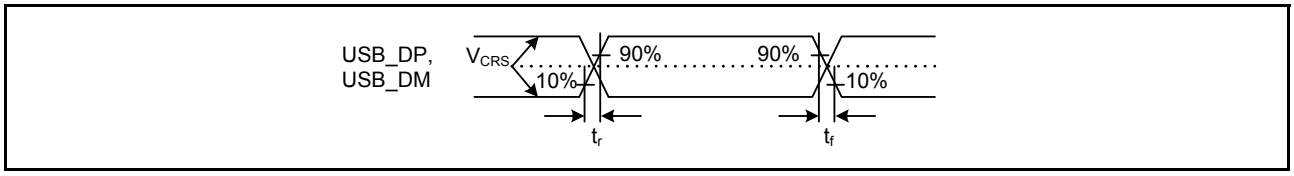

Figure 2.58 USB_DP and USB_DM output timing

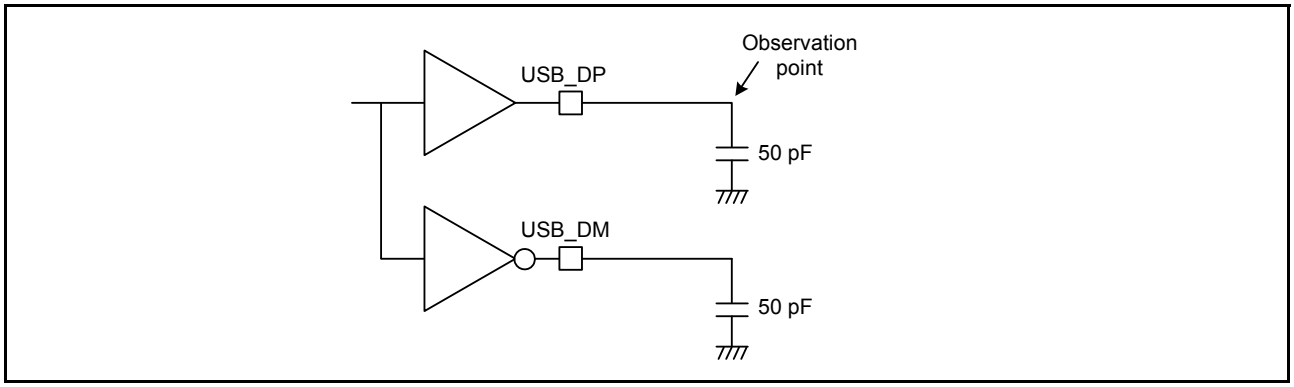

Figure 2.59 Test circuit for Full-Speed (FS) connection

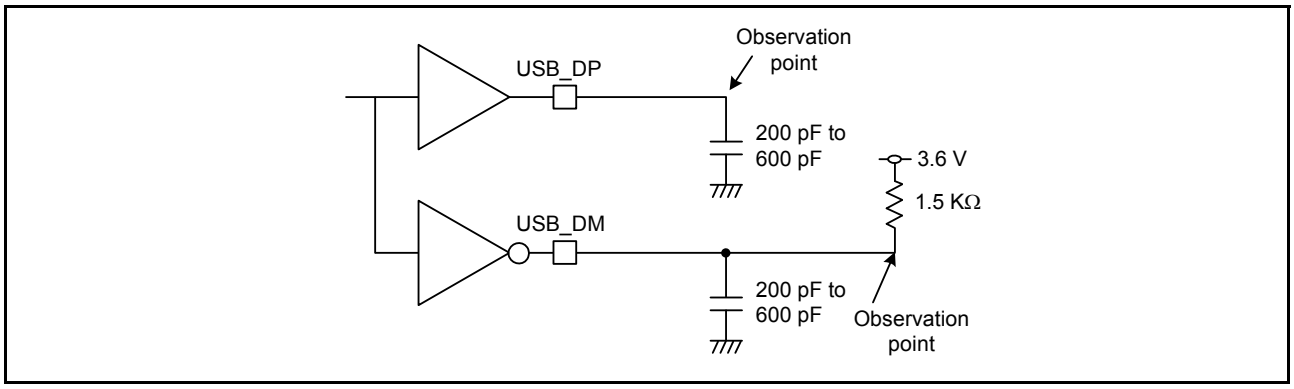

Figure 2.60 Test circuit for Low-Speed (LS) connection

2.4.2 USB External Supply

Table 2.39 USB regulator

Parameter		Min	Typ	Max	Unit	Test conditions
VCC_USB supply current	VCC_USB_LDO ≥ 3.8V	-	-	50	mA	-
	VCC_USB_LDO ≥ 4.5V	-	-	100	mA	-
VCC_USB supply voltage		3.0	-	3.6	V	-

2.5 ADC14 Characteristics

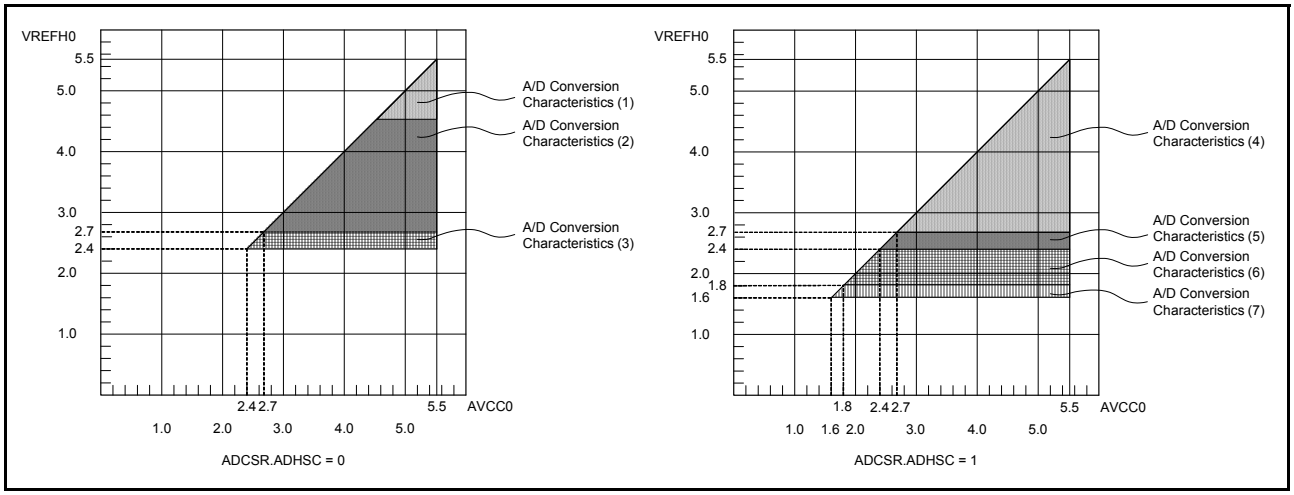

Figure 2.61 AVCC0 to VREFH0 voltage range

Table 2.40 A/D conversion characteristics (1) in high-speed A/D conversion mode (1 of 2)
Conditions: VCC = AVCC0 = 4.5 to 5.5 V, VREFH0 = 4.5 to 5.5 V, VSS = AVSS0 = VREFL0 = 0V
Reference voltage range applied to the VREFH0 and VREFL0.

Parameter		Min	Typ	Max	Unit	Test Conditions
Frequency		1	-	64	MHz	-
Analog input capacitance*2	Cs	-	-	8*3	pF	High-precision channel
		-	-	9*3	pF	Normal-precision channel
Analog input resistance	Rs	-	-	2.5*3	kΩ	High-precision channel
		-	-	6.7*3	kΩ	Normal-precision channel
Analog input voltage range	Ain	0	-	VREFH0	V	-
12-bit mode						
Resolution		-	-	12	Bit	-
Conversion time*1 (Operation at PCLKD = 64 MHz)	Permissible signal source impedance Max. = 0.3 kΩ	0.70	-	-	μs	High-precision channel ADCSR.ADHSC = 0 ADSSTRn.SST[7:0] = 0Dh
		1.13	-	-	μs	Normal-precision channel ADCSR.ADHSC = 0 ADSSTRn.SST[7:0] = 28h
Offset error		-	±0.5	±4.5	LSB	High-precision channel
				±6.0	LSB	Other than above
Full-scale error		-	±0.75	±4.5	LSB	High-precision channel
				±6.0	LSB	Other than above
Quantization error		-	±0.5	-	LSB	-
Absolute accuracy		-	±1.25	±5.0	LSB	High-precision channel
				±8.0	LSB	Other than above
DNL differential nonlinearity error		-	±1.0	-	LSB	-
INL integral nonlinearity error		-	±1.0	±3.0	LSB	-
14-bit mode						
Resolution		-	-	14	Bit	-

Table 2.40 A/D conversion characteristics (1) in high-speed A/D conversion mode (2 of 2)
Conditions: VCC = AVCC0 = 4.5 to 5.5 V, VREFH0 = 4.5 to 5.5 V, VSS = AVSS0 = VREFL0 = 0V
Reference voltage range applied to the VREFH0 and VREFL0.

Parameter		Min	Typ	Max	Unit	Test Conditions
Conversion time*1 (Operation at PCLKD = 64 MHz)	Permissible signal source impedance Max. = 0.3 kΩ	0.80	-	-	μs	High-precision channel ADCSR.ADHSC = 0 ADSSTRn.SST[7:0] = 0Dh
		1.22	-	-	μs	Normal-precision channel ADCSR.ADHSC = 0 ADSSTRn.SST[7:0] = 28h
Offset error		-	±2.0	±18	LSB	High-precision channel
				±24.0	LSB	Other than above
Full-scale error		-	±3.0	±18	LSB	High-precision channel
				±24.0	LSB	Other than above
Quantization error		-	±0.5	-	LSB	-
Absolute accuracy		-	±5.0	±20	LSB	High-precision channel
				±32.0	LSB	Other than above
DNL differential nonlinearity error		-	±4.0	-	LSB	-
INL integral nonlinearity error		-	±4.0	±12.0	LSB	-

Note: The characteristics apply when no pin functions other than 14-bit A/D converter input are used. Absolute accuracy does not include quantization errors. Offset error, full-scale error, DNL differential nonlinearity error, and INL integral nonlinearity error do not include quantization errors.

Note 1. The conversion time is the sum of the sampling time and the comparison time. The number of sampling states is indicated for the test conditions.

Note 2. Except for I/O input capacitance (Cin), see section 2.2.4, I/O VOH, VOL, and Other Characteristics.

Note 3. Reference data.

Table 2.41 A/D conversion characteristics (2) in high-speed A/D conversion mode (1 of 2)
Conditions: VCC = AVCC0 = 2.7 to 5.5 V, VREFH0 = 2.7 to 5.5 V, VSS = AVSS0 = VREFL0 = 0V
Reference voltage range applied to the VREFH0 and VREFL0.

Parameter		Min	Typ	Max	Unit	Test Conditions
Frequency		1	-	48	MHz	-
Analog input capacitance*2	Cs	-	-	8*3	pF	High-precision channel
		-	-	9*3	pF	Normal-precision channel
Analog input resistance	Rs	-	-	2.5*3	kΩ	High-precision channel
		-	-	6.7*3	kΩ	Normal-precision channel
Analog input voltage range	Ain	0	-	VREFH0	V	-
12-bit mode						
Resolution		-	-	12	Bit	-
Conversion time*1 (Operation at PCLKD = 48 MHz)	Permissible signal source impedance Max. = 0.3 kΩ	0.94	-	-	μs	High-precision channel ADCSR.ADHSC = 0 ADSSTRn.SST[7:0] = 0Dh
		1.50	-	-	μs	Normal-precision channel ADCSR.ADHSC = 0 ADSSTRn.SST[7:0] = 28h
Offset error		-	±0.5	±4.5	LSB	High-precision channel
				±6.0	LSB	Other than above
Full-scale error		-	±0.75	±4.5	LSB	High-precision channel
				±6.0	LSB	Other than above
Quantization error		-	±0.5	-	LSB	-
Absolute accuracy		-	±1.25	±5.0	LSB	High-precision channel
				±8.0	LSB	Other than above
DNL differential nonlinearity error		-	±1.0	-	LSB	-
INL integral nonlinearity error		-	±1.0	±3.0	LSB	-

Table 2.41 A/D conversion characteristics (2) in high-speed A/D conversion mode (2 of 2)
Conditions: VCC = AVCC0 = 2.7 to 5.5 V, VREFH0 = 2.7 to 5.5 V, VSS = AVSS0 = VREFL0 = 0V
Reference voltage range applied to the VREFH0 and VREFL0.

Parameter		Min	Typ	Max	Unit	Test Conditions
14-bit mode						
Resolution		-	-	14	Bit	-
Conversion time*1 (Operation at PCLKD = 48 MHz)	Permissible signal source impedance Max. = 0.3 kΩ	1.06	-	-	μs	High-precision channel ADCSR.ADHSC = 0 ADSSTRn.SST[7:0] = 0Dh
		1.63	-	-	μs	Normal-precision channel ADCSR.ADHSC = 0 ADSSTRn.SST[7:0] = 28h
Offset error		-	±2.0	±18	LSB	High-precision channel
				±24.0	LSB	Other than above
Full-scale error		-	±3.0	±18	LSB	High-precision channel
				±24.0	LSB	Other than above
Quantization error		-	±0.5	-	LSB	-
Absolute accuracy		-	±5.0	±20	LSB	High-precision channel
				±32.0	LSB	Other than above
DNL differential nonlinearity error		-	±4.0	-	LSB	-
INL integral nonlinearity error		-	±4.0	±12.0	LSB	-

Note: The characteristics apply when no pin functions other than 14-bit A/D converter input are used. Absolute accuracy does not include quantization errors. Offset error, full-scale error, DNL differential nonlinearity error, and INL integral nonlinearity error do not include quantization errors.

Note 1. The conversion time is the sum of the sampling time and the comparison time. The number of sampling states is indicated for the test conditions.

Note 2. Except for I/O input capacitance (Cin), see section 2.2.4, I/O VOH, VOL, and Other Characteristics.

Note 3. Reference data.

Table 2.42 A/D conversion characteristics (3) in high-speed A/D conversion mode (1 of 2)
Conditions: VCC = AVCC0 = 2.4 to 5.5 V, VREFH0 = 2.4 to 5.5 V, VSS = AVSS0 = VREFL0 = 0V
Reference voltage range applied to the VREFH0 and VREFL0.

Parameter		Min	Typ	Max	Unit	Test Conditions
Frequency		1	-	32	MHz	-
Analog input capacitance*2	Cs	-	-	8*3	pF	High-precision channel
		-	-	9*3	pF	Normal-precision channel
Analog input resistance	Rs	-	-	2.5*3	kΩ	High-precision channel
		-	-	6.7*3	kΩ	Normal-precision channel
Analog input voltage range	Ain	0	-	VREFH0	V	-
12-bit mode						
Resolution		-	-	12	Bit	-
Conversion time*1 (Operation at PCLKD = 32 MHz)	Permissible signal source impedance Max. = 1.3 kΩ	1.41	-	-	μs	High-precision channel ADCSR.ADHSC = 0 ADSSTRn.SST[7:0] = 0Dh
		2.25	-	-	μs	Normal-precision channel ADCSR.ADHSC = 0 ADSSTRn.SST[7:0] = 28h
Offset error		-	±0.5	±4.5	LSB	High-precision channel
				±6.0	LSB	Other than above
Full-scale error		-	±0.75	±4.5	LSB	High-precision channel
				±6.0	LSB	Other than above
Quantization error		-	±0.5	-	LSB	-
Absolute accuracy		-	±1.25	±5.0	LSB	High-precision channel
				±8.0	LSB	Other than above

Table 2.42 A/D conversion characteristics (3) in high-speed A/D conversion mode (2 of 2)
Conditions: VCC = AVCC0 = 2.4 to 5.5 V, VREFH0 = 2.4 to 5.5 V, VSS = AVSS0 = VREFL0 = 0V
Reference voltage range applied to the VREFH0 and VREFL0.

Parameter		Min	Typ	Max	Unit	Test Conditions
DNL differential nonlinearity error		-	±1.0	-	LSB	-
INL integral nonlinearity error		-	±1.0	±3.0	LSB	-
14-bit mode						
Resolution		-	-	14	Bit	-
Conversion time*1 (Operation at PCLKD = 32 MHz)	Permissible signal source impedance Max. = 1.3 kΩ	1.59	-	-	μs	High-precision channel ADCSR.ADHSC = 0 ADSSTRn.SST[7:0] = 0Dh
		2.44	-	-	μs	Normal-precision channel ADCSR.ADHSC = 0 ADSSTRn.SST[7:0] = 28h
Offset error		-	±2.0	±18	LSB	High-precision channel
				±24.0	LSB	Other than above
Full-scale error		-	±3.0	±18	LSB	High-precision channel
				±24.0	LSB	Other than above
Quantization error		-	±0.5	-	LSB	-
Absolute accuracy		-	±5.0	±20	LSB	High-precision channel
				±32.0	LSB	Other than above
DNL differential nonlinearity error		-	±4.0	-	LSB	-
INL integral nonlinearity error		-	±4.0	±12.0	LSB	-

Note: The characteristics apply when no pin functions other than 14-bit A/D converter input are used. Absolute accuracy does not include quantization errors. Offset error, full-scale error, DNL differential nonlinearity error, and INL integral nonlinearity error do not include quantization errors.

Note 1. The conversion time is the sum of the sampling time and the comparison time. The number of sampling states is indicated for the test conditions.

Note 2. Except for I/O input capacitance (Cin), see section 2.2.4, I/O VOH, VOL, and Other Characteristics.

Note 3. Reference data.

Table 2.43 A/D conversion characteristics (4) in low-power A/D conversion mode (1 of 2)
Conditions: VCC = AVCC0 = 2.7 to 5.5 V, VREFH0 = 2.7 to 5.5 V, VSS = AVSS0 = VREFL0 = 0V
Reference voltage range applied to the VREFH0 and VREFL0.

Parameter		Min	Typ	Max	Unit	Test Conditions
Frequency		1	-	24	MHz	-
Analog input capacitance*2	Cs	-	-	8*3	pF	High-precision channel
		-	-	9*3	pF	Normal-precision channel
Analog input resistance	Rs	-	-	2.5*3	kΩ	High-precision channel
		-	-	6.7*3	kΩ	Normal-precision channel
Analog input voltage range	Ain	0	-	VREFH0	V	-
12-bit mode						
Resolution		-	-	12	Bit	-
Conversion time*1 (Operation at PCLKD = 24 MHz)	Permissible signal source impedance Max. = 1.1 kΩ	2.25	-	-	μs	High-precision channel ADCSR.ADHSC = 1 ADSSTRn.SST[7:0] = 0Dh
		3.38	-	-	μs	Normal-precision channel ADCSR.ADHSC = 1 ADSSTRn.SST[7:0] = 28h
Offset error		-	±0.5	±4.5	LSB	High-precision channel
				±6.0	LSB	Other than above
Full-scale error		-	±0.75	±4.5	LSB	High-precision channel
				±6.0	LSB	Other than above
Quantization error		-	±0.5	-	LSB	-

Table 2.43 A/D conversion characteristics (4) in low-power A/D conversion mode (2 of 2)
Conditions: VCC = AVCC0 = 2.7 to 5.5 V, VREFH0 = 2.7 to 5.5 V, VSS = AVSS0 = VREFL0 = 0V
Reference voltage range applied to the VREFH0 and VREFL0.

Parameter		Min	Typ	Max	Unit	Test Conditions
Absolute accuracy		-	±1.25	±5.0	LSB	High-precision channel
				±8.0	LSB	Other than above
DNL differential nonlinearity error		-	±1.0	-	LSB	-
INL integral nonlinearity error		-	±1.0	±3.0	LSB	-
14-bit mode						
Resolution		-	-	14	Bit	-
Conversion time*1 (Operation at PCLKD = 24 MHz)	Permissible signal source impedance Max. = 1.1 kΩ	2.50	-	-	μs	High-precision channel ADCSR.ADHSC = 1 ADSSTRn.SST[7:0] = 0Dh
		3.63	-	-	μs	Normal-precision channel ADCSR.ADHSC = 1 ADSSTRn.SST[7:0] = 28h
Offset error		-	±2.0	±18	LSB	High-precision channel
				±24.0	LSB	Other than above
Full-scale error		-	±3.0	±18	LSB	High-precision channel
				±24.0	LSB	Other than above
Quantization error		-	±0.5	-	LSB	-
Absolute accuracy		-	±5.0	±20	LSB	High-precision channel
				±32.0	LSB	Other than above
DNL differential nonlinearity error		-	±4.0	-	LSB	-
INL integral nonlinearity error		-	±4.0	±12.0	LSB	-

Note: The characteristics apply when no pin functions other than 14-bit A/D converter input are used. Absolute accuracy does not include quantization errors. Offset error, full-scale error, DNL differential nonlinearity error, and INL integral nonlinearity error do not include quantization errors.
Note 1. The conversion time is the sum of the sampling time and the comparison time. The number of sampling states is indicated for the test conditions.
Note 2. Except for I/O input capacitance (Cin), see section 2.2.4, I/O VOH, VOL, and Other Characteristics.
Note 3. Reference data.

Table 2.44 A/D conversion characteristics (5) in low-power A/D conversion mode (1 of 2)
Conditions: VCC = AVCC0 = 2.4 to 5.5 V, VREFH0 = 2.4 to 5.5 V, VSS = AVSS0 = VREFL0 = 0V
Reference voltage range applied to the VREFH0 and VREFL0.

Parameter		Min	Typ	Max	Unit	Test Conditions
Frequency		1	-	16	MHz	-
Analog input capacitance*2	Cs	-	-	8*3	pF	High-precision channel
		-	-	9*3	pF	Normal-precision channel
Analog input resistance	Rs	-	-	2.5*3	kΩ	High-precision channel
		-	-	6.7*3	kΩ	Normal-precision channel
Analog input voltage range	Ain	0	-	VREFH0	V	-
12-bit mode						
Resolution		-	-	12	Bit	-
Conversion time*1 (Operation at PCLKD = 16 MHz)	Permissible signal source impedance Max. = 2.2 kΩ	3.38	-	-	μs	High-precision channel ADCSR.ADHSC = 1 ADSSTRn.SST[7:0] = 0Dh
		5.06	-	-	μs	Normal-precision channel ADCSR.ADHSC = 1 ADSSTRn.SST[7:0] = 28h
Offset error		-	±0.5	±4.5	LSB	High-precision channel
				±6.0	LSB	Other than above

Table 2.44 A/D conversion characteristics (5) in low-power A/D conversion mode (2 of 2)
Conditions: VCC = AVCC0 = 2.4 to 5.5 V, VREFH0 = 2.4 to 5.5 V, VSS = AVSS0 = VREFL0 = 0V
Reference voltage range applied to the VREFH0 and VREFL0.

Parameter		Min	Typ	Max	Unit	Test Conditions
Full-scale error		-	±0.75	±4.5	LSB	High-precision channel
				±6.0	LSB	Other than above
Quantization error		-	±0.5	-	LSB	-
Absolute accuracy		-	±1.25	±5.0	LSB	High-precision channel
				±8.0	LSB	Other than above
DNL differential nonlinearity error		-	±1.0	-	LSB	-
INL integral nonlinearity error		-	±1.0	±3.0	LSB	-
14-bit mode						
Resolution		-	-	14	Bit	-
Conversion time*1 (Operation at PCLKD = 16 MHz)	Permissible signal source impedance Max. = 2.2 kΩ	3.75	-	-	μs	High-precision channel ADCSR.ADHSC = 1 ADSSTRn.SST[7:0] = 0Dh
		5.44	-	-	μs	Normal-precision channel ADCSR.ADHSC = 1 ADSSTRn.SST[7:0] = 28h
Offset error		-	±2.0	±18	LSB	High-precision channel
				±24.0	LSB	Other than above
Full-scale error		-	±3.0	±18	LSB	High-precision channel
				±24.0	LSB	Other than above
Quantization error		-	±0.5	-	LSB	-
Absolute accuracy		-	±5.0	±20	LSB	High-precision channel
				±32.0	LSB	Other than above
DNL differential nonlinearity error		-	±4.0	-	LSB	-
INL integral nonlinearity error		-	±4.0	±12.0	LSB	-

Note: The characteristics apply when no pin functions other than 14-bit A/D converter input are used. Absolute accuracy does not include quantization errors. Offset error, full-scale error, DNL differential nonlinearity error, and INL integral nonlinearity error do not include quantization errors.

Note 1. The conversion time is the sum of the sampling time and the comparison time. The number of sampling states is indicated for the test conditions.

Note 2. Except for I/O input capacitance (Cin), see section 2.2.4, I/O VOH, VOL, and Other Characteristics.

Note 3. Reference data.

Table 2.45 A/D conversion characteristics (6) in low-power A/D conversion mode (1 of 2)
Conditions: VCC = AVCC0 = 1.8 to 5.5 V (AVCC0 = VCC when VCC < 2.0 V), VREFH0 = 1.8 to 5.5 V, VSS = AVSS0 = VREFL0 = 0 V
Reference voltage range applied to the VREFH0 and VREFL0.

Parameter		Min	Typ	Max	Unit	Test Conditions
Frequency		1	-	8	MHz	-
Analog input capacitance*2	Cs	-	-	8*3	pF	High-precision channel
		-	-	9*3	pF	Normal-precision channel
Analog input resistance	Rs	-	-	3.8*3	kΩ	High-precision channel
		-	-	8.2*3	kΩ	Normal-precision channel
Analog input voltage range	Ain	0	-	VREFH0	V	-
12-bit mode						
Resolution		-	-	12	Bit	-

Table 2.45 A/D conversion characteristics (6) in low-power A/D conversion mode (2 of 2)
Conditions: VCC = AVCC0 = 1.8 to 5.5 V (AVCC0 = VCC when VCC < 2.0 V), VREFH0 = 1.8 to 5.5 V, VSS = AVSS0 = VREFL0 = 0 V
Reference voltage range applied to the VREFH0 and VREFL0.

Parameter		Min	Typ	Max	Unit	Test Conditions
Conversion time*1 (Operation at PCLKD = 8 MHz)	Permissible signal source impedance Max. = 5 kΩ	6.75	-	-	μs	High-precision channel ADCSR.ADHSC = 1 ADSSTRn.SST[7:0] = 0Dh
		10.13	-	-	μs	Normal-precision channel ADCSR.ADHSC = 1 ADSSTRn.SST[7:0] = 28h
Offset error		-	±1.0	±7.5	LSB	High-precision channel
				±10.0	LSB	Other than above
Full-scale error		-	±1.5	±7.5	LSB	High-precision channel
				±10.0	LSB	Other than above
Quantization error		-	±0.5	-	LSB	-
Absolute accuracy		-	±3.0	±8.0	LSB	High-precision channel
				±12.0	LSB	Other than above
DNL differential nonlinearity error		-	±1.0	-	LSB	-
INL integral nonlinearity error		-	±1.0	±3.0	LSB	-
14-bit mode						
Resolution		-	-	14	Bit	-
Conversion time*1 (Operation at PCLKD = 8 MHz)	Permissible signal source impedance Max. = 5 kΩ	7.50	-	-	μs	High-precision channel ADCSR.ADHSC = 1 ADSSTRn.SST[7:0] = 0Dh
		10.88	-	-	μs	Normal-precision channel ADCSR.ADHSC = 1 ADSSTRn.SST[7:0] = 28h
Offset error		-	±4.0	±30.0	LSB	High-precision channel
				±40.0	LSB	Other than above
Full-scale error		-	±6.0	±30.0	LSB	High-precision channel
				±40.0	LSB	Other than above
Quantization error		-	±0.5	-	LSB	-
Absolute accuracy		-	±12.0	±32.0	LSB	High-precision channel
				±48.0	LSB	Other than above
DNL differential nonlinearity error		-	±4.0	-	LSB	-
INL integral nonlinearity error		-	±4.0	±12.0	LSB	-

Note: The characteristics apply when no pin functions other than 14-bit A/D converter input are used. Absolute accuracy does not include quantization errors. Offset error, full-scale error, DNL differential nonlinearity error, and INL integral nonlinearity error do not include quantization errors.

Note 1. The conversion time is the sum of the sampling time and the comparison time. The number of sampling states is indicated for the test conditions.

Note 2. Except for I/O input capacitance (Cin), see section 2.2.4, I/O VOH, VOL, and Other Characteristics.

Note 3. Reference data.

Table 2.46 A/D conversion characteristics (7) in low-power A/D conversion mode (1 of 2)
Conditions: VCC = AVCC0 = 1.6 to 5.5 V (AVCC0 = VCC when VCC < 2.0 V), VREFH0 = 1.6 to 5.5 V, VSS = AVSS0 = VREFL0 = 0
Reference voltage range applied to the VREFH0 and VREFL0.

Parameter		Min	Typ	Max	Unit	Test Conditions
Frequency		1	-	4	MHz	-
Analog input capacitance*2	Cs	-	-	8*3	pF	High-precision channel
		-	-	9*3	pF	Normal-precision channel
Analog input resistance	Rs	-	-	13.1*3	kΩ	High-precision channel
		-	-	14.3*3	kΩ	Normal-precision channel

Table 2.46 A/D conversion characteristics (7) in low-power A/D conversion mode (2 of 2)
Conditions: VCC = AVCC0 = 1.6 to 5.5 V (AVCC0 = VCC when VCC < 2.0 V), VREFH0 = 1.6 to 5.5 V, VSS = AVSS0 = VREFL0 = 0
Reference voltage range applied to the VREFH0 and VREFL0.

Parameter		Min	Typ	Max	Unit	Test Conditions
Analog input voltage range	Ain	0	-	VREFH0	V	-
12-bit mode						
Resolution		-	-	12	Bit	-
Conversion time*1 (Operation at PCLKD = 4 MHz)	Permissible signal source impedance Max. = 9.9 kΩ	13.5	-	-	μs	High-precision channel ADCSR.ADHSC = 1 ADSSTRn.SST[7:0] = 0Dh
		20.25	-	-	μs	Normal-precision channel ADCSR.ADHSC = 1 ADSSTRn.SST[7:0] = 28h
Offset error		-	±1.0	±7.5	LSB	High-precision channel
				±10.0	LSB	Other than above
Full-scale error		-	±1.5	±7.5	LSB	High-precision channel
				±10.0	LSB	Other than above
Quantization error		-	±0.5	-	LSB	-
Absolute accuracy		-	±3.0	±8.0	LSB	High-precision channel
				±12.0	LSB	Other than above
DNL differential nonlinearity error		-	±1.0	-	LSB	-
INL integral nonlinearity error		-	±1.0	±3.0	LSB	-
14-bit mode						
Resolution		-	-	14	Bit	-
Conversion time*1 (Operation at PCLKD = 4 MHz)	Permissible signal source impedance Max. = 9.9 kΩ	15.0	-	-	μs	High-precision channel ADCSR.ADHSC = 1 ADSSTRn.SST[7:0] = 0Dh
		21.75	-	-	μs	Normal-precision channel ADCSR.ADHSC = 1 ADSSTRn.SST[7:0] = 28h
Offset error		-	±4.0	±30.0	LSB	High-precision channel
				±40.0	LSB	Other than above
Full-scale error		-	±6.0	±30.0	LSB	High-precision channel
				±40.0	LSB	Other than above
Quantization error		-	±0.5	-	LSB	-
Absolute accuracy		-	±12.0	±32.0	LSB	High-precision channel
				±48.0	LSB	Other than above
DNL differential nonlinearity error		-	±4.0	-	LSB	-
INL integral nonlinearity error		-	±4.0	±12.0	LSB	-

Note: The characteristics apply when no pin functions other than 14-bit A/D converter input are used. Absolute accuracy does not include quantization errors. Offset error, full-scale error, DNL differential nonlinearity error, and INL integral nonlinearity error do not include quantization errors.

Note 1. The conversion time is the sum of the sampling time and the comparison time. The number of sampling states is indicated for the test conditions.

Note 2. Except for I/O input capacitance (Cin), see section 2.2.4, I/O VOH, VOL, and Other Characteristics.

Note 3. Reference data.

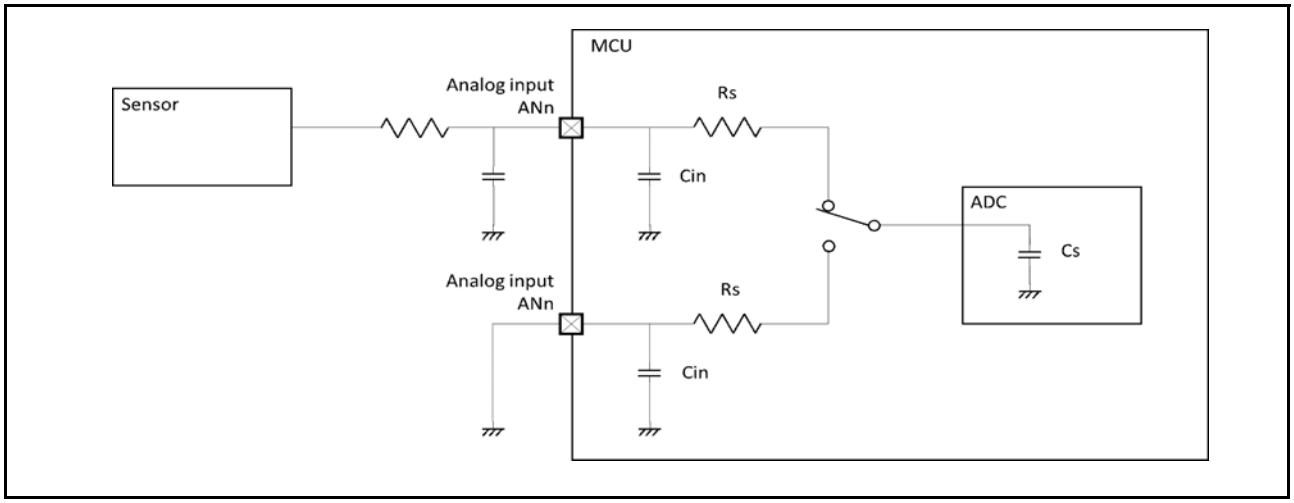

Figure 2.62 Equivalent circuit for analog input

Table 2.47 14-bit A/D converter channel classification

Classification	Channel	Conditions	Remarks
High-precision channel	AN000 to AN010	AVCC0 = 1.6 to 5.5 V	Pins AN000 to AN010 cannot be used as general I/O, TS transmission, when the A/D converter is in use.
Normal-precision channel	AN016 to AN022		
Internal reference voltage input channel	Internal reference voltage	AVCC0 = 2.0 to 5.5 V	-
Temperature sensor input channel	Temperature sensor output	AVCC0 = 2.0 to 5.5 V	-

Table 2.48 A/D internal reference voltage characteristics

Conditions: VCC = AVCC0 = VREFH0 = 2.0 to 5.5 V*1

Parameter	Min	Typ	Max	Unit	Test conditions
Internal reference voltage input channel*2	1.36	1.43	1.50	V	-
Frequency	1	-	2	MHz	-
Sampling time	5.0	-	-	μs	-

Note 1. The internal reference voltage cannot be selected for input channels when AVCC0 < 2.0 V.

Note 2. The 14-bit A/D internal reference voltage indicates the voltage when the internal reference voltage is input to the 14-bit A/D converter.

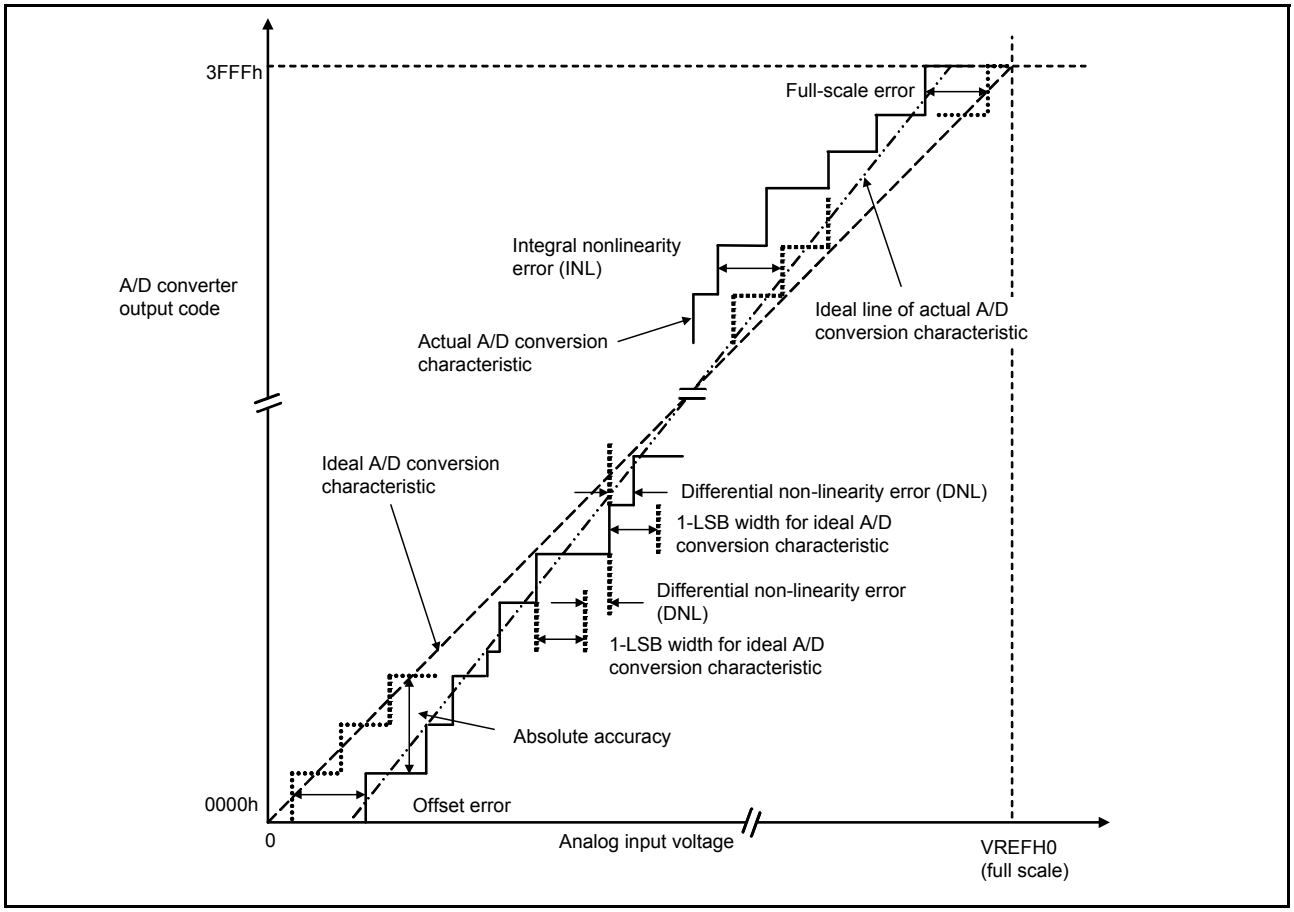

Figure 2.63 Illustration of 14-bit A/D converter characteristic terms

Absolute accuracy

Absolute accuracy is the difference between output code based on the theoretical A/D conversion characteristics, and the actual A/D conversion result. When measuring absolute accuracy, the voltage at the midpoint of the width of the analog input voltage (1-LSB width), which can meet the expectation of outputting an equal code based on the theoretical A/D conversion characteristics, is used as the analog input voltage. For example, if 12-bit resolution is used and the reference voltage VREFH0 = 3.072 V, then 1-LSB width becomes 0.75 mV, and 0 mV, 0.75 mV, and 1.5 mV are used as the analog input voltages. If analog input voltage is 6 mV, an absolute accuracy of ±5 LSB means that the actual A/D conversion result is in the range of 003h to 00Dh, though an output code of 008h can be expected from the theoretical A/D conversion characteristics.

Integral nonlinearity error (INL)

Integral nonlinearity error is the maximum deviation between the ideal line when the measured offset and full-scale errors are zeroed, and the actual output code.

Differential nonlinearity error (DNL)

Differential nonlinearity error is the difference between 1-LSB width based on the ideal A/D conversion characteristics and the width of the actual output code.

Offset error

Offset error is the difference between the transition point of the ideal first output code and the actual first output code.

Full-scale error

Full-scale error is the difference between the transition point of the ideal last output code and the actual last output code.

2.6 DAC12 Characteristics

Table 2.49 D/A conversion characteristics
Conditions: VCC = AVCC0 = 1.8 to 5.5 V
Reference voltage = AVCC0 or AVSS0 selected

Parameter	Min	Typ	Max	Unit	Test conditions
Resolution	-	-	12	bit	-
Resistive load	30	-	-	kΩ	-
Capacitive load	-	-	50	pF	-
Output voltage range	0.35	-	AVCC0 – 0.47	V	-
DNL differential nonlinearity error	-	±0.5	±2.0	LSB	-
INL integral nonlinearity error	-	±2.0	±8.0	LSB	-
Offset error	-	-	±30	mV	-
Full-scale error	-	-	±30	mV	-
Output impedance	-	5	-	Ω	-
Conversion time	-	-	30	μs	-

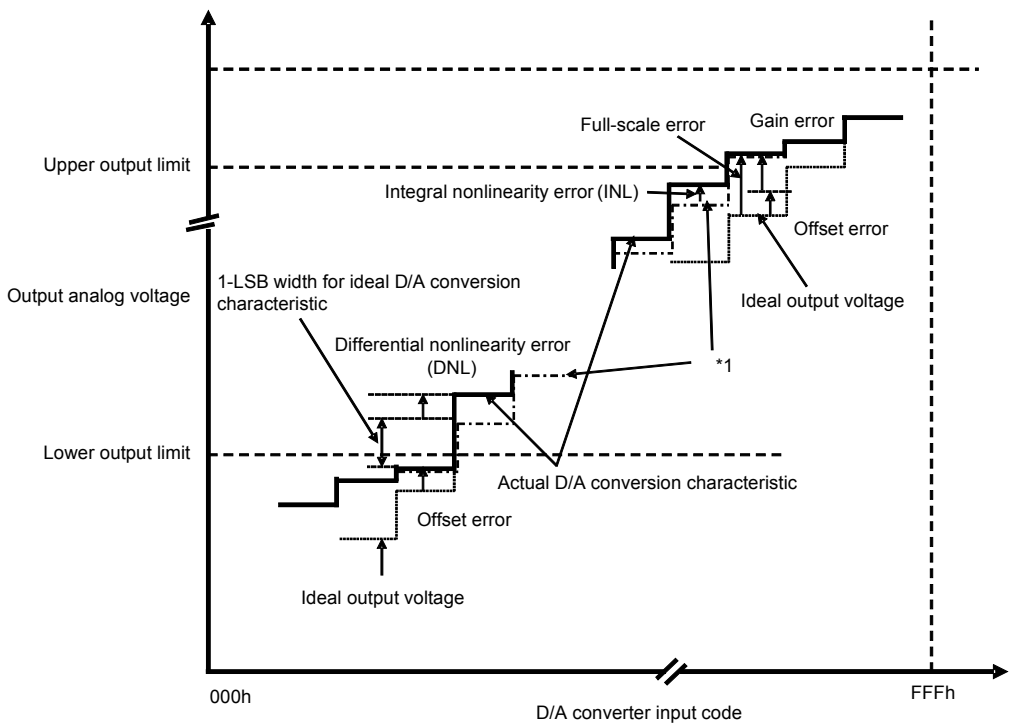

Note 1. Ideal D/A conversion output voltage that is adjusted so that offset and full scale errors are zeroed

Figure 2.64 Illustration of D/A converter characteristic terms

Integral nonlinearity error (INL)

Integral nonlinearity error is the maximum deviation between the ideal output voltage based on the ideal conversion characteristic when the measured offset and full-scale errors are zeroed, and the actual output voltage.

Differential nonlinearity error (DNL)

Differential nonlinearity error is the difference between 1-LSB voltage width based on the ideal D/A conversion characteristics and the width of the actual output voltage.

Offset error

Offset error is the difference between the highest actual output voltage that falls below the lower output limit and the ideal output voltage based on the input code.

Full-scale error

Full-scale error is the difference between the lowest actual output voltage that exceeds the upper output limit and the ideal output voltage based on the input code.

2.7 TSN Characteristics

Table 2.50 TSN characteristics

Conditions: VCC = AVCC0 = 2.0 to 5.5 V

Parameter	Symbol	Min	Typ	Max	Unit	Test conditions
Relative accuracy	-	-	±1.5	-	°C	2.4 V or above
		-	±2.0	-	°C	Below 2.4 V
Temperature slope	-	-	–3.65	-	mV/°C	-
Output voltage (at 25°C)	-	-	1.05	-	V	VCC = 3.3 V
Temperature sensor start time	t_{START}	-	-	5	μs	-
Sampling time	-	5	-	-	μs	

2.8 OSC Stop Detect Characteristics

Table 2.51 Oscillation stop detection circuit characteristics

Parameter	Symbol	Min	Typ	Max	Unit	Test conditions
Detection time	t_{dr}	-	-	1	ms	Figure 2.65

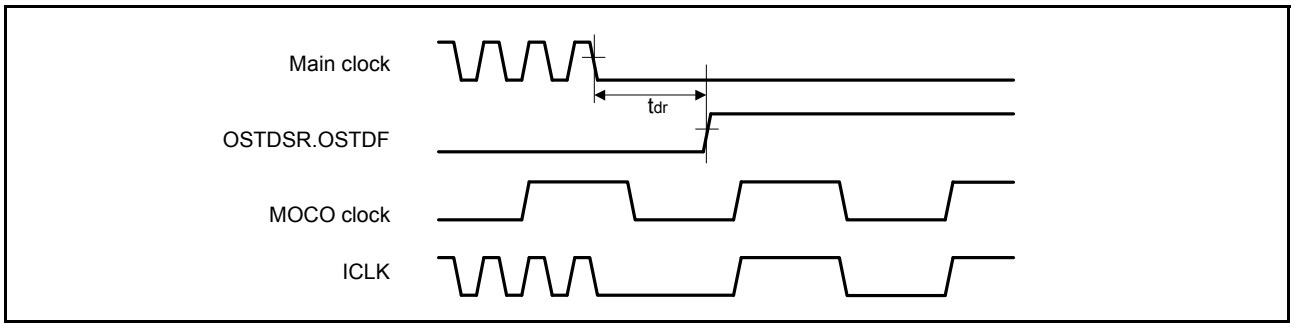

Figure 2.65 Oscillation stop detection timing

2.9 POR and LVD Characteristics

Table 2.52 Power-on reset circuit and voltage detection circuit characteristics (1)

Parameter		Symbol	Min	Typ	Max	Unit	Test Conditions
Voltage detection level*1	Power-on reset (POR)	V_{POR}	1.27	1.42	1.57	V	Figure 2.66, Figure 2.67
	Voltage detection circuit (LVD0)*2	V_{det0_0}	3.68	3.85	4.00	V	Figure 2.68 At falling edge VCC
		V_{det0_1}	2.68	2.85	2.96		
		V_{det0_2}	2.38	2.53	2.64		
		V_{det0_3}	1.78	1.90	2.02		
		V_{det0_4}	1.60	1.69	1.82		
	Voltage detection circuit (LVD1)*3	V_{det1_0}	4.13	4.29	4.45	V	Figure 2.69 At falling edge VCC
		V_{det1_1}	3.98	4.16	4.30		
		V_{det1_2}	3.86	4.03	4.18		
		V_{det1_3}	3.68	3.86	4.00		
		V_{det1_4}	2.98	3.10	3.22		
		V_{det1_5}	2.89	3.00	3.11		
		V_{det1_6}	2.79	2.90	3.01		
		V_{det1_7}	2.68	2.79	2.90		
		V_{det1_8}	2.58	2.68	2.78		
		V_{det1_9}	2.48	2.58	2.68		
		V_{det1_A}	2.38	2.48	2.58		
		V_{det1_B}	2.10	2.20	2.30		
		V_{det1_C}	1.84	1.96	2.05		
		V_{det1_D}	1.74	1.86	1.95		
		V_{det1_E}	1.63	1.75	1.84		
		V_{det1_F}	1.60	1.65	1.73		
	Voltage detection circuit (LVD2)*4	V_{det2_0}	4.11	4.31	4.48	V	Figure 2.70 At falling edge VCC
		V_{det2_1}	3.97	4.17	4.34		
		V_{det2_2}	3.83	4.03	4.20		
		V_{det2_3}	3.64	3.84	4.01		

Note 1. These characteristics apply when noise is not superimposed on the power supply. When a setting causes this voltage detection level to overlap with that of the voltage detection circuit, it cannot be specified whether LVD1 or LVD2 is used for voltage detection.

Note 2. # in the symbol $V_{det0_\#}$ denotes the value of the OFS1.VDSEL1[2:0] bits.

Note 3. # in the symbol $V_{det1_\#}$ denotes the value of the LVDLVLR.LVD1LVL[4:0] bits.

Note 4. # in the symbol $V_{det2_\#}$ denotes the value of the LVDLVLR.LVD2LVL[2:0] bits.

Table 2.53 Power-on reset circuit and voltage detection circuit characteristics (2) (1 of 2)

Parameter		Symbol	Min	Typ	Max	Unit	Test Conditions
Wait time after power-on Reset cancellation	LVD0:enable	t_{POR}	-	1.7	-	ms	-
	LVD0:disable	t_{POR}	-	1.3	-	ms	-
Wait time after voltage monitor 0,1,2 reset cancellation	LVD0:enable*1	$t_{LVD0,1,2}$	-	0.6	-	ms	-
	LVD0:disable*2	$t_{LVD1,2}$	-	0.2	-	ms	-
Response delay*3		t_{det}	-	-	350	μs	Figure 2.66, Figure 2.67
Minimum VCC down time		t_{VOFF}	450	-	-	μs	Figure 2.66, VCC = 1.0 V or above

Table 2.53 Power-on reset circuit and voltage detection circuit characteristics (2) (2 of 2)

Parameter	Symbol	Min	Typ	Max	Unit	Test Conditions
Power-on reset enable time	$t_{W\ (POR)}$	1	-	-	ms	Figure 2.67, VCC = below 1.0 V
LVD operation stabilization time (after LVD is enabled)	$T_{d\ (E-A)}$	-	-	300	μs	Figure 2.69, Figure 2.70
Hysteresis width (POR)	V_{PORH}	-	110	-	mV	-
Hysteresis width (LVD0, LVD1, and LVD2)	V_{LVH}	-	60	-	mV	LVD0 selected
		-	100	-		V_{det1_0} to V_{det1_2} selected.
		-	60	-		V_{det1_3} to V_{det1_9} selected.
		-	50	-		V_{det1_A} to V_{det1_B} selected.
		-	40	-		V_{det1_C} to V_{det1_F} selected.
		-	60	-		LVD2 selected

Note 1. When OFS1.LVDAS = 0
Note 2. When OFS1.LVDAS = 1
Note 3. The minimum VCC down time indicates the time when VCC is below the minimum value of voltage detection levels V_{POR}, V_{det0}, V_{det1}, and V_{det2} for the POR/LVD.

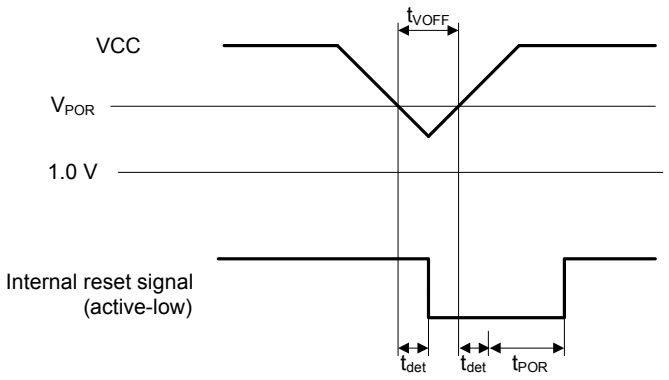

Figure 2.66 Voltage detection reset timing

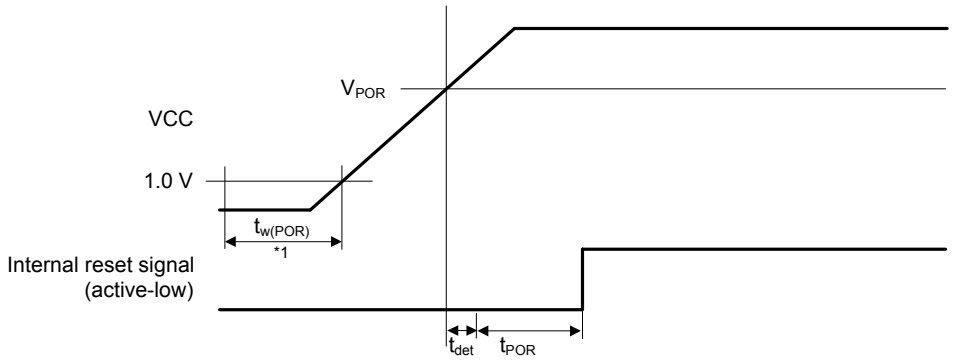

Note: $t_{W(POR)}$ is the time required for a power-on reset to be enabled while the external power VCC is being held below the valid voltage (1.0 V).
When VCC turns on, maintain $t_{W(POR)}$ for 1.0 ms or more.

Figure 2.67 Power-on reset timing

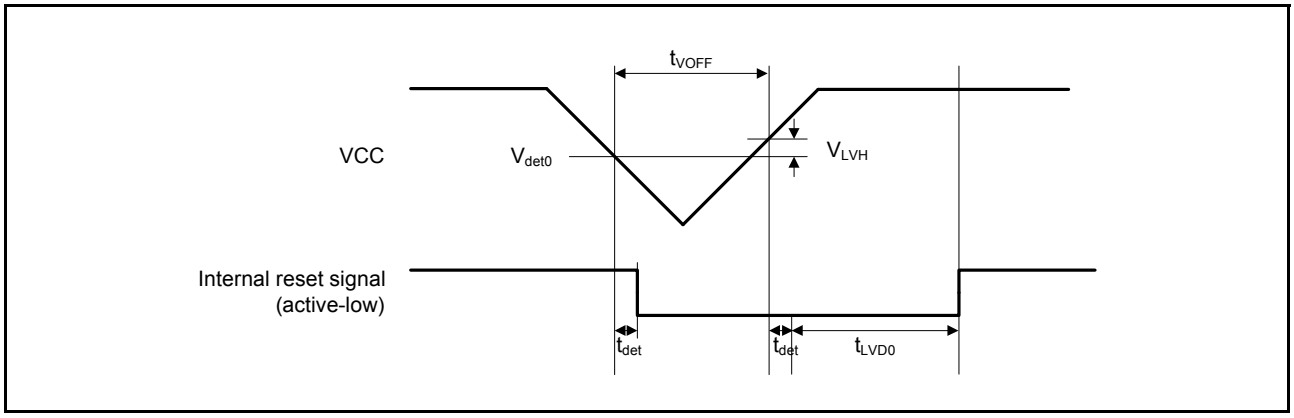

Figure 2.68 Voltage detection circuit timing (V_{det0})

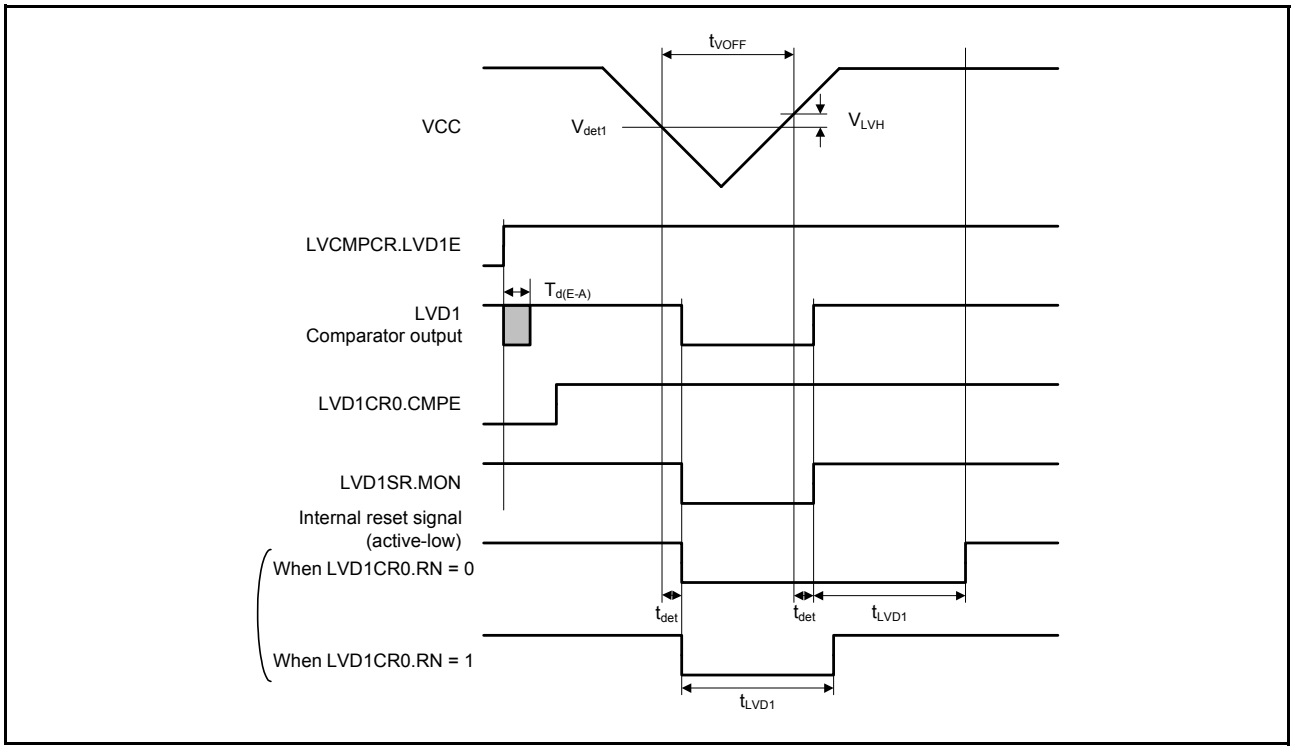

Figure 2.69 Voltage detection circuit timing (V_{det1})

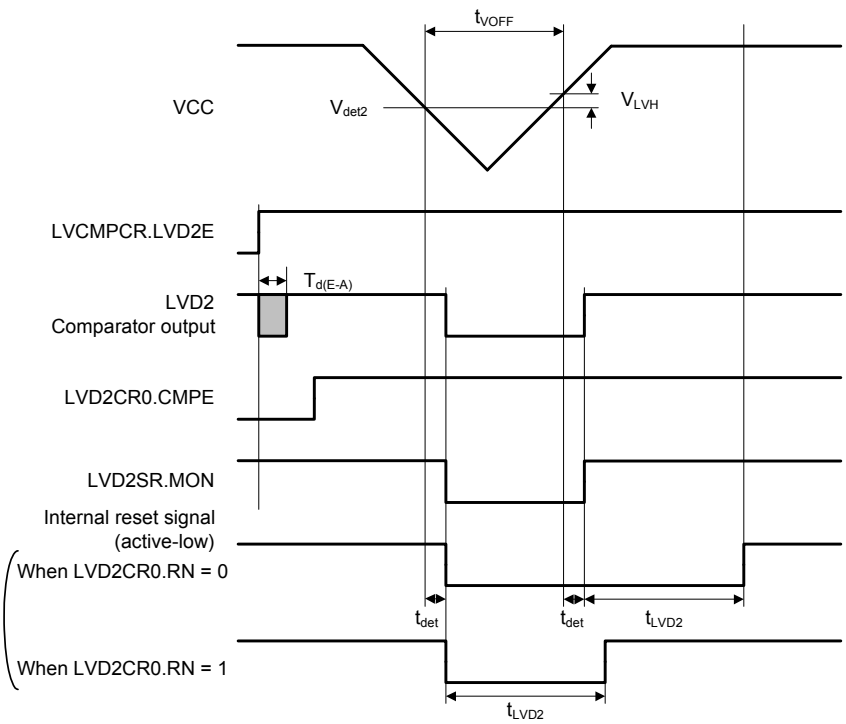

Figure 2.70 Voltage detection circuit timing (V_{det2})

2.10 CTSU Characteristics

Table 2.54 CTSU characteristics

Conditions: VCC = AVCC0 = 1.8 to 5.5 V

Parameter	Symbol	Min	Typ	Max	Unit	Test conditions
External capacitance connected to TSCAP pin	C_{tscap}	9	10	11	nF	-
TS pin capacitive load	C_{base}	-	-	50	pF	-
Permissible output high current	ΣIoH	-	-	-24	mA	When the mutual capacitance method is applied

2.11 Comparator Characteristics

Table 2.55 ACMPLP characteristics
Conditions: VCC = AVCC0 = 1.8 to 5.5 V, VSS = AVSS0 = 0 V

Parameter		Symbol	Min	Typ	Max	Unit	Test conditions
Reference voltage range		V_{REF}	0	-	VCC –1.4	V	-
Input voltage range		V_I	0	-	VCC	V	-
Internal reference voltage		-	1.36	1.44	1.50	V	-
Output delay	High-speed mode	T_d	-	-	1.2	μs	VCC = 3.0 Slew rate of input signal > 50 mV/μs
	Low-speed mode		-	-	5	μs	
	Window mode		-	-	2	μs	
Offset voltage	High-speed mode	-	-	-	50	mV	-
	Low-speed mode	-	-	-	40	mV	-
	Window mode	-	-	-	60	mV	-
Internal reference voltage for window mode		V_{RFH}	-	0.76 × VCC	-	V	-
		V_{RFL}	-	0.24 × VCC	-	V	-
Operation stabilization wait time		T_{cmp}	100	-	-	μs	-

2.12 Flash Memory Characteristics

2.12.1 Code Flash Memory Characteristics

Table 2.56 Code flash characteristics (1)

Parameter		Symbol	Min	Typ	Max	Unit	Conditions
Reprogramming/erasure cycle*1		N_{PEC}	1000	-	-	Times	-
Data hold time	After 1000 times N_{PEC}	t_{DRP}	20*2, *3	-	-	Year	T_a = +85°C

Note 1. The reprogram/erase cycle is the number of erasures for each block. When the reprogram/erase cycle is n times (n = 1,000), erasing can be performed n times for each block. For instance, when 4-byte programming is performed 256 times for different addresses in 1-KB blocks, and then the entire block is erased, the reprogram/erase cycle is counted as 1. However, programming the same address for several times as one erasure is not enabled. (overwriting is prohibited.)

Note 2. Characteristic when using the flash memory programmer and the self-programming library provided by Renesas Electronics.

Note 3. This result is obtained from reliability testing.

Table 2.57 Code flash characteristics (2)

High-speed operating mode

Conditions: VCC = AVCC0 = 2.7 to 5.5 V

Parameter		Symbol	ICLK = 1 MHz			ICLK = 32 MHz			Unit
			Min	Typ	Max	Min	Typ	Max	
Programming time	4-byte	t_{P4}	-	116	998	-	54	506	μs
Erasure time	1-KB	t_{E1K}	-	9.03	287	-	5.67	222	ms
Blank check time	4-byte	t_{BC4}	-	-	56.8	-	-	16.6	μs
	1-KB	t_{BC1K}	-	-	1899	-	-	140	μs
Erase suspended time		t_{SED}	-	-	22.5	-	-	10.7	μs
Startup area switching setting time		t_{SAS}	-	21.9	585	-	12.1	447	ms
Access window time		t_{AWS}	-	21.9	585	-	12.1	447	ms
OCD/serial programmer ID setting time		t_{OSIS}	-	21.9	585	-	12.1	447	ms
Flash memory mode transition wait time 1		t_{DIS}	2	-	-	2	-	-	μs
Flash memory mode transition wait time 2		t_{MS}	5	-	-	5	-	-	μs

Note 1. Does not include the time until each operation of the flash memory is started after instructions are executed by the software.

Note 2. The lower-limit frequency of ICLK is 1 MHz during programming or erasing the flash memory. When using ICLK at below 4 MHz, the frequency can be set to 1 MHz, 2 MHz, or 3 MHz. A non-integer frequency such as 1.5 MHz cannot be set.

Note 3. The frequency accuracy of ICLK must be ±3.5% while programming or erasing the flash memory. Confirm the frequency accuracy of the clock source.

Table 2.58 Code flash characteristics (3)

Middle-speed operating mode

Conditions: VCC = AVCC0 = 1.8 to 5.5 V, Ta = -40 to +85°C

Parameter		Symbol	ICLK = 1 MHz			ICLK = 8 MHz			Unit
			Min	Typ	Max	Min	Typ	Max	
Programming time	4-byte	t_{P4}	-	157	1411	-	101	966	μs
Erasure time	1-KB	t_{E1K}	-	9.10	289	-	6.10	228	ms
Blank check time	2-byte	t_{BC4}	-	-	87.7	-	-	52.5	μs
	1-KB	t_{BC1K}	-	-	1930	-	-	414	μs
Erase suspended time		t_{SED}	-	-	32.7	-	-	21.6	μs
Startup area switching setting time		t_{SAS}	-	22.8	592	-	14.2	465	ms
Access window time		t_{AWS}	-	22.8	592	-	14.2	465	ms
OCD/serial programmer ID setting time		t_{OSIS}	-	22.8	592	-	14.2	465	ms
Flash memory mode transition wait time 1		t_{DIS}	2	-	-	2	-	-	μs
Flash memory mode transition wait time 2		t_{MS}	720	-	-	720	-	-	ns

Note 1. Does not include the time until each operation of the flash memory is started after instructions are executed by the software.

Note 2. The lower-limit frequency of ICLK is 1 MHz during programming or erasing the flash memory. When using ICLK at below 4 MHz, the frequency can be set to 1 MHz, 2 MHz, or 3 MHz. A non-integer frequency such as 1.5 MHz cannot be set.

Note 3. The frequency accuracy of ICLK must be ±3.5% while programming or erasing the flash memory. Confirm the frequency accuracy of the clock source.

2.12.2 Data Flash Memory Characteristics

Table 2.59 Data flash characteristics (1)

Parameter		Symbol	Min	Typ	Max	Unit	Conditions
Reprogramming/erasure cycle*1		N_{DPEC}	100000	1000000	-	Times	-
Data hold time	After 10000 times of N_{DPEC}	t_{DDRP}	20*2, *3	-	-	Year	Ta = +85°C
	After 100000 times of N_{DPEC}		5*2, *3	-	-	Year	
	After 1000000 times of N_{DPEC}		-	1*2, *3	-	Year	Ta = +25°C

Note 1. The reprogram/erase cycle is the number of erasure for each block. When the reprogram/erase cycle is n times (n = 100,000), erasing can be performed n times for each block. For instance, when 1-byte programming is performed 1,000 times for different addresses in 1-byte blocks, and then the entire block is erased, the reprogram/erase cycle is counted as 1. However, programming the same address for several times as one erasure is not enabled. (overwriting is prohibited.)

Note 2. Characteristics when using the flash memory programmer and the self-programming library provided by Renesas Electronics.

Note 3. These results are obtained from reliability testing.

Table 2.60 Data flash characteristics (2)
High-speed operating mode
Conditions: VCC = AVCC0 = 2.7 to 5.5 V

Parameter		Symbol	ICLK = 4 MHz			ICLK = 32 MHz			Unit
			Min	Typ	Max	Min	Typ	Max	
Programming time	1-byte	t_{DP1}	-	52.4	463	-	42.1	387	μs
Erasure time	1-KB	t_{DE1K}	-	8.98	286	-	6.42	237	ms
Blank check time	1-byte	t_{DBC1}	-	-	24.3	-	-	16.6	μs
	1-KB	t_{DBC1K}	-	-	1872	-	-	512	μs
Suspended time during erasing		t_{DSED}	-	-	13.0	-	-	10.7	μs
Data flash STOP recovery time		t_{DSTOP}	5	-	-	5	-	-	μs

Note 1. Does not include the time until each operation of the flash memory is started after instructions are executed by the software.
Note 2. The lower-limit frequency of ICLK is 1 MHz during programming or erasing the flash memory. When using ICLK at below 4 MHz, the frequency can be set to 1 MHz, 2 MHz, or 3 MHz. A non-integer frequency such as 1.5 MHz cannot be set.
Note 3. The frequency accuracy of ICLK must be ±3.5% while programming or erasing the flash memory. Confirm the frequency accuracy of the clock source.

Table 2.61 Data flash characteristics (3)
Middle-speed operating mode
Conditions: VCC = AVCC0 = 1.8 to 5.5 V, Ta = -40 to +85°C

Parameter		Symbol	ICLK = 4 MHz			ICLK = 8 MHz			Unit
			Min	Typ	Max	Min	Typ	Max	
Programming time	1-byte	t_{DP1}	-	94.7	886	-	89.3	849	μs
Erasure time	1-KB	t_{DE1K}	-	9.59	299	-	8.29	273	ms
Blank check time	1-byte	t_{DBC1}	-	-	56.2	-	-	52.5	μs
	1-KB	t_{DBC1K}	-	-	2.17	-	-	1.51	ms
Suspended time during erasing		t_{DSED}	-	-	23.0	-	-	21.7	μs
Data flash STOP recovery time		t_{DSTOP}	720	-	-	720	-	-	ns

Note 1. Does not include the time until each operation of the flash memory is started after instructions are executed by the software.
Note 2. The lower-limit frequency of ICLK is 1 MHz during programming or erasing the flash memory. When using ICLK at below 4 MHz, the frequency can be set to 1 MHz, 2 MHz, or 3 MHz. A non-integer frequency such as 1.5 MHz cannot be set.
Note 3. The frequency accuracy of ICLK must be ±3.5% while programming or erasing the flash memory. Confirm the frequency accuracy of the clock source.

2.12.3 Serial Wire Debug (SWD)

Table 2.62 SWD characteristics (1)
Conditions: VCC = AVCC0 = 2.4 to 5.5 V

Parameter	Symbol	Min	Typ	Max	Unit	Test conditions
SWCLK clock cycle time	$t_{SWCKcyc}$	80	-	-	ns	Figure 2.71
SWCLK clock high pulse width	t_{SWCKH}	35	-	-	ns	
SWCLK clock low pulse width	t_{SWCKL}	35	-	-	ns	
SWCLK clock rise time	t_{SWCKr}	-	-	5	ns	
SWCLK clock fall time	t_{SWCKf}	-	-	5	ns	
SWDIO setup time	t_{SWDS}	16	-	-	ns	Figure 2.72
SWDIO hold time	t_{SWDH}	16	-	-	ns	
SWDIO data delay time	t_{SWDD}	2	-	70	ns	

Table 2.63 SWD characteristics (2)
Conditions: VCC = AVCC0 = 1.6 to 2.4 V

Parameter	Symbol	Min	Typ	Max	Unit	Test conditions
SWCLK clock cycle time	$t_{SWCKcyc}$	250	-	-	ns	Figure 2.71
SWCLK clock high pulse width	t_{SWCKH}	120	-	-	ns	
SWCLK clock low pulse width	t_{SWCKL}	120	-	-	ns	
SWCLK clock rise time	t_{SWCKr}	-	-	5	ns	
SWCLK clock fall time	t_{SWCKf}	-	-	5	ns	
SWDIO setup time	t_{SWDS}	50	-	-	ns	Figure 2.72
SWDIO hold time	t_{SWDH}	50	-	-	ns	
SWDIO data delay time	t_{SWDD}	2	-	150	ns	

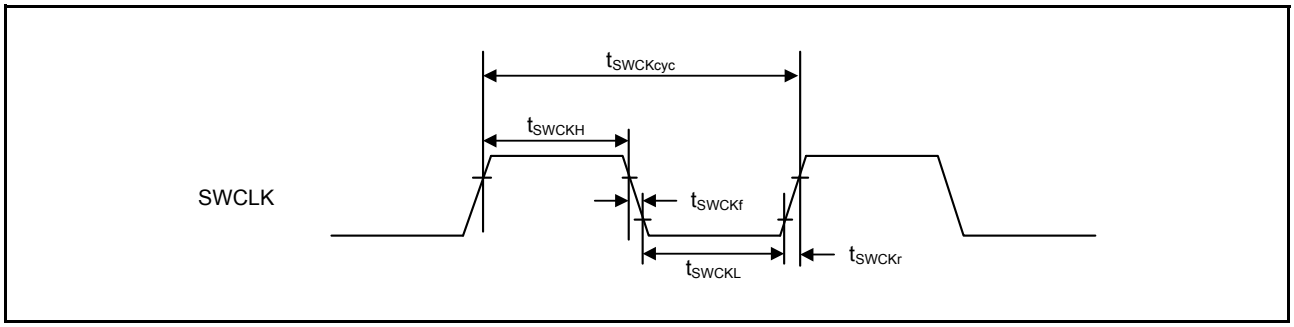

Figure 2.71 SWD SWCLK timing

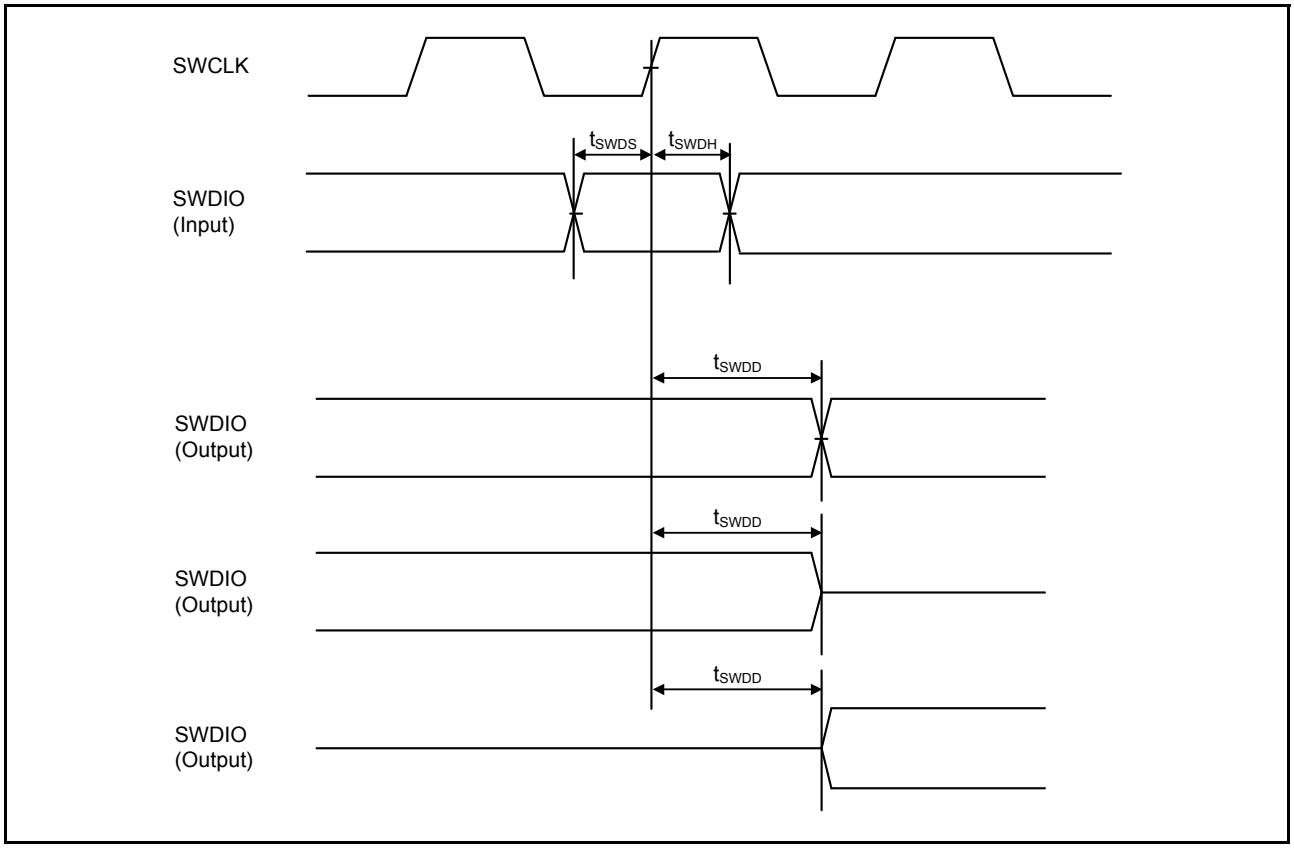

Figure 2.72 SWD input output timing

Appendix 1. Package Dimensions

Information on the latest version of the package dimensions or mountings is displayed in “Packages” on the Renesas Electronics Corporation website.

JEITA Package Code	RENESAS Code	Previous Code	MASS (Typ) [g]
P-LFQFP64-10x10-0.50	PLQP0064KB-C	—	0.3

Unit: mm

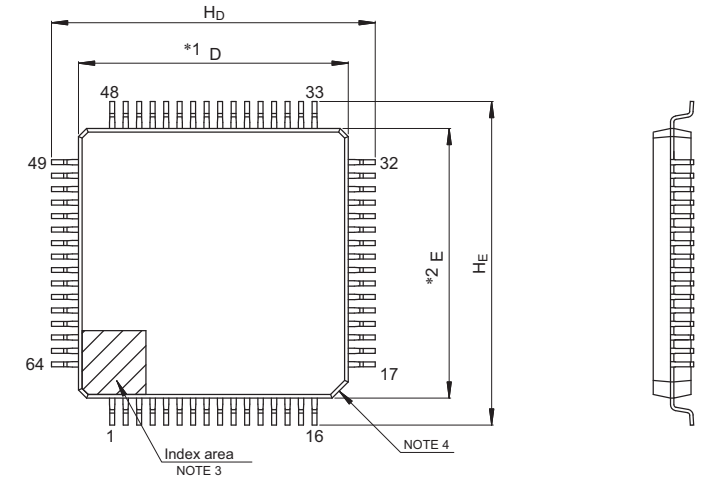

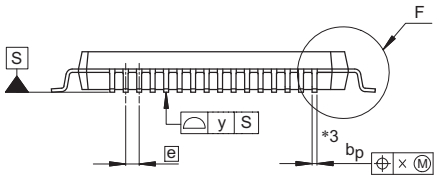

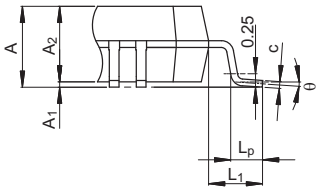

Detail F

NOTE)
1. DIMENSIONS “*1” AND “*2” DO NOT INCLUDE MOLD FLASH.
2. DIMENSION “*3” DOES NOT INCLUDE TRIM OFFSET.
3. PIN 1 VISUAL INDEX FEATURE MAY VARY, BUT MUST BE LOCATED WITHIN THE HATCHED AREA.
4. CHAMFERS AT CORNERS ARE OPTIONAL, SIZE MAY VARY.

Reference Symbol	Dimensions in millimeters		
	Min	Nom	Max
D	9.9	10.0	10.1
E	9.9	10.0	10.1
A_2	—	1.4	—
H_D	11.8	12.0	12.2
H_E	11.8	12.0	12.2
A	—	—	1.7
A_1	0.05	—	0.15
b_p	0.15	0.20	0.27
c	0.09	—	0.20
θ	0°	3.5°	8°
e	—	0.5	—
x	—	—	0.08
y	—	—	0.08
L_p	0.45	0.6	0.75
L_1	—	1.0	—

© 2015 Renesas Electronics Corporation. All rights reserved.

Figure 1.1 LQFP 64-pin

JEITA Package Code	RENESAS Code	Previous Code	MASS (Typ) [g]
P-LFQFP48-7x7-0.50	PLQP0048KB-B	—	0.2

Unit: mm

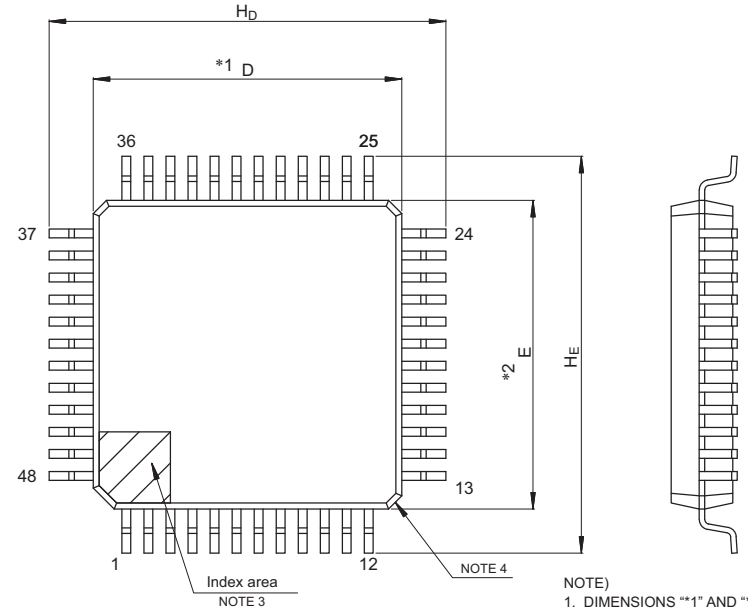

NOTE)
1. DIMENSIONS "*1" AND "*2" DO NOT INCLUDE MOLD FLASH.
2. DIMENSION "*3" DOES NOT INCLUDE TRIM OFFSET.
3. PIN 1 VISUAL INDEX FEATURE MAY VARY, BUT MUST BE LOCATED WITHIN THE HATCHED AREA.
4. CHAMFERS AT CORNERS ARE OPTIONAL, SIZE MAY VARY.

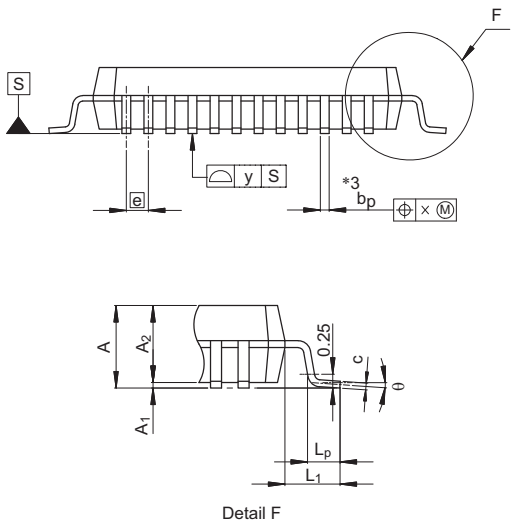

Reference Symbol	Dimensions in millimeters		
	Min	Nom	Max
D	6.9	7.0	7.1
E	6.9	7.0	7.1
A_2	—	1.4	—
H_D	8.8	9.0	9.2
H_E	8.8	9.0	9.2
A	—	—	1.7
A_1	0.05	—	0.15
b_p	0.17	0.20	0.27
c	0.09	—	0.20
θ	0°	3.5°	8°
e	—	0.5	—
x	—	—	0.08
y	—	—	0.08
L_p	0.45	0.6	0.75
L_1	—	1.0	—

© 2015 Renesas Electronics Corporation. All rights reserved.

Figure 1.2 LQFP 48-pin

JEITA Package Code	RENESAS Code	Previous Code	MASS (TYP.) [g]
P-WFLGA36-4x4-0.50	PWLG0036KA-A	P36FC-50-AA4-2	0.023

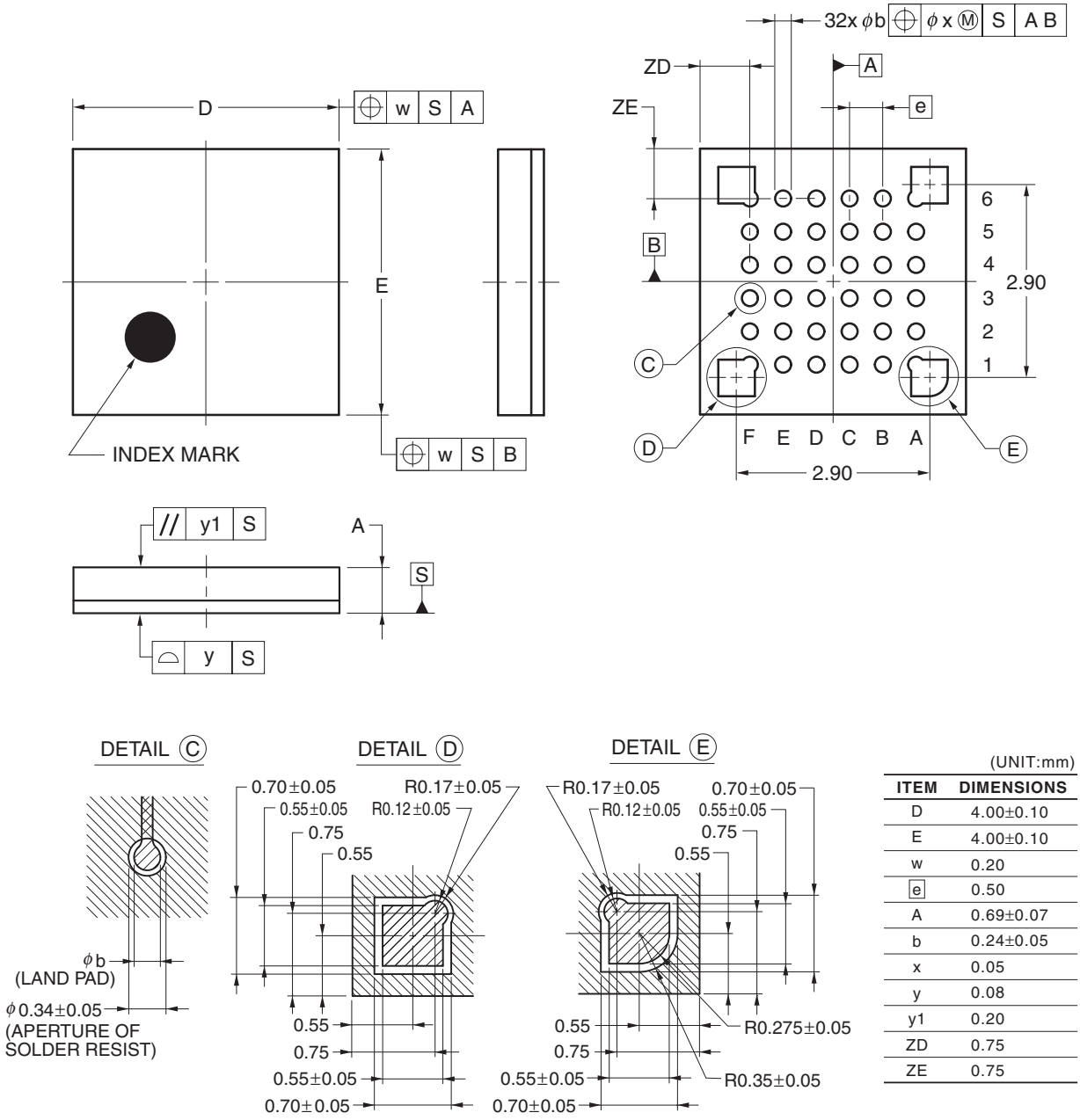

(UNIT:mm)

ITEM	DIMENSIONS
D	4.00±0.10
E	4.00±0.10
w	0.20
e	0.50
A	0.69±0.07
b	0.24±0.05
x	0.05
y	0.08
y1	0.20
ZD	0.75
ZE	0.75

©2012 Renesas Electronics Corporation. All rights reserved.

Figure 1.3 LGA 36-pin

JEITA Package code	RENESAS code	Previous code	MASS(TYP.)[g]
P-HWQFN64-8x8-0.40	PWQN0064LA-A	P64K8-40-9B5-3	0.16

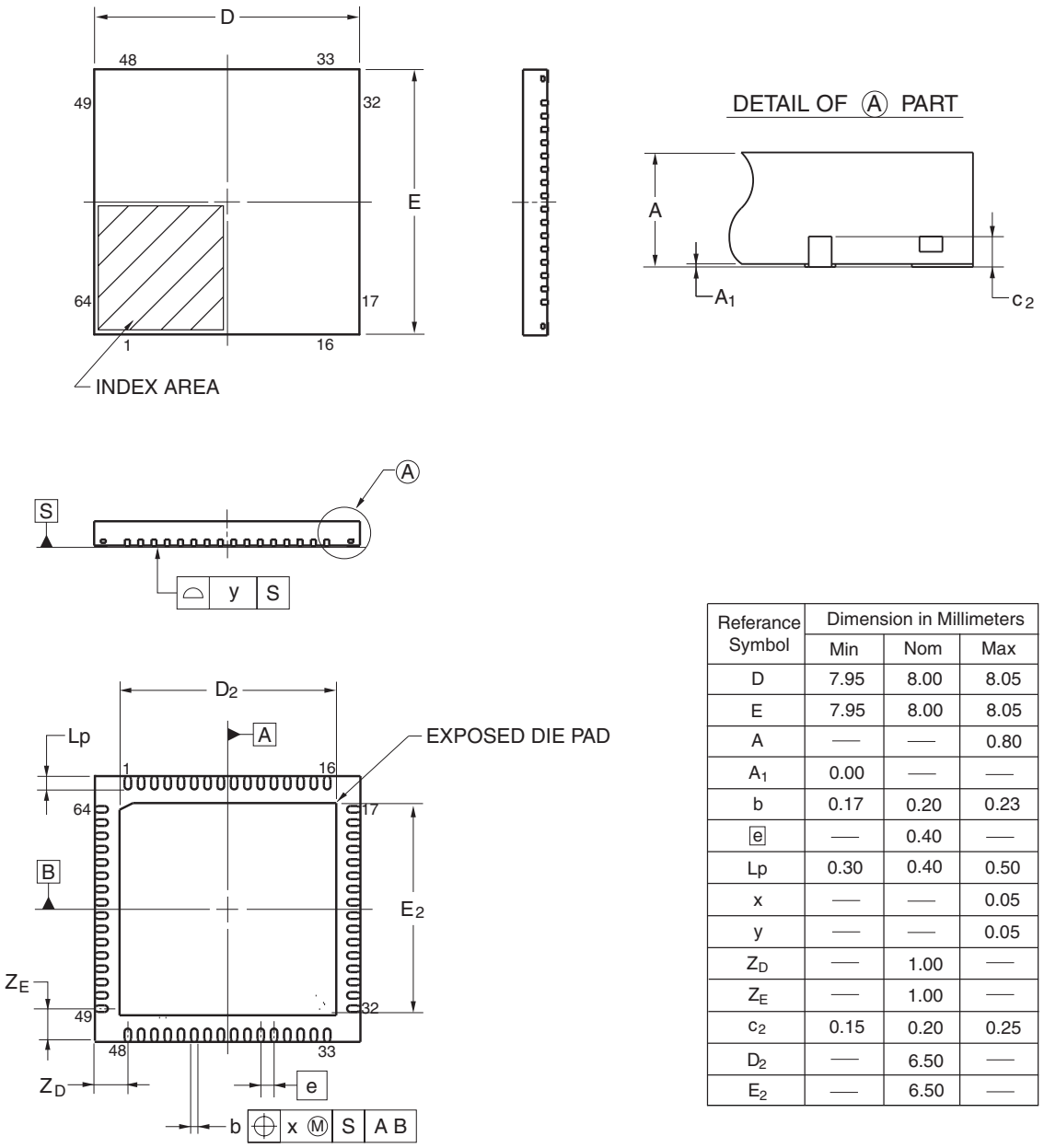

Referance Symbol	Dimension in Millimeters		
	Min	Nom	Max
D	7.95	8.00	8.05
E	7.95	8.00	8.05
A	—	—	0.80
A_1	0.00	—	—
b	0.17	0.20	0.23
e	—	0.40	—
Lp	0.30	0.40	0.50
x	—	—	0.05
y	—	—	0.05
Z_D	—	1.00	—
Z_E	—	1.00	—
c_2	0.15	0.20	0.25
D_2	—	6.50	—
E_2	—	6.50	—

©2013 Renesas Electronics Corporation. All rights reserved.

Figure 1.4 QFN 64-pin

JEITA Package code	RENESAS code	Previous code	MASS(TYP.)[g]
P-HWQFN48-7x7-0.50	PWQN0048KB-A	48PJN-A P48K8-50-5B4-6	0.13

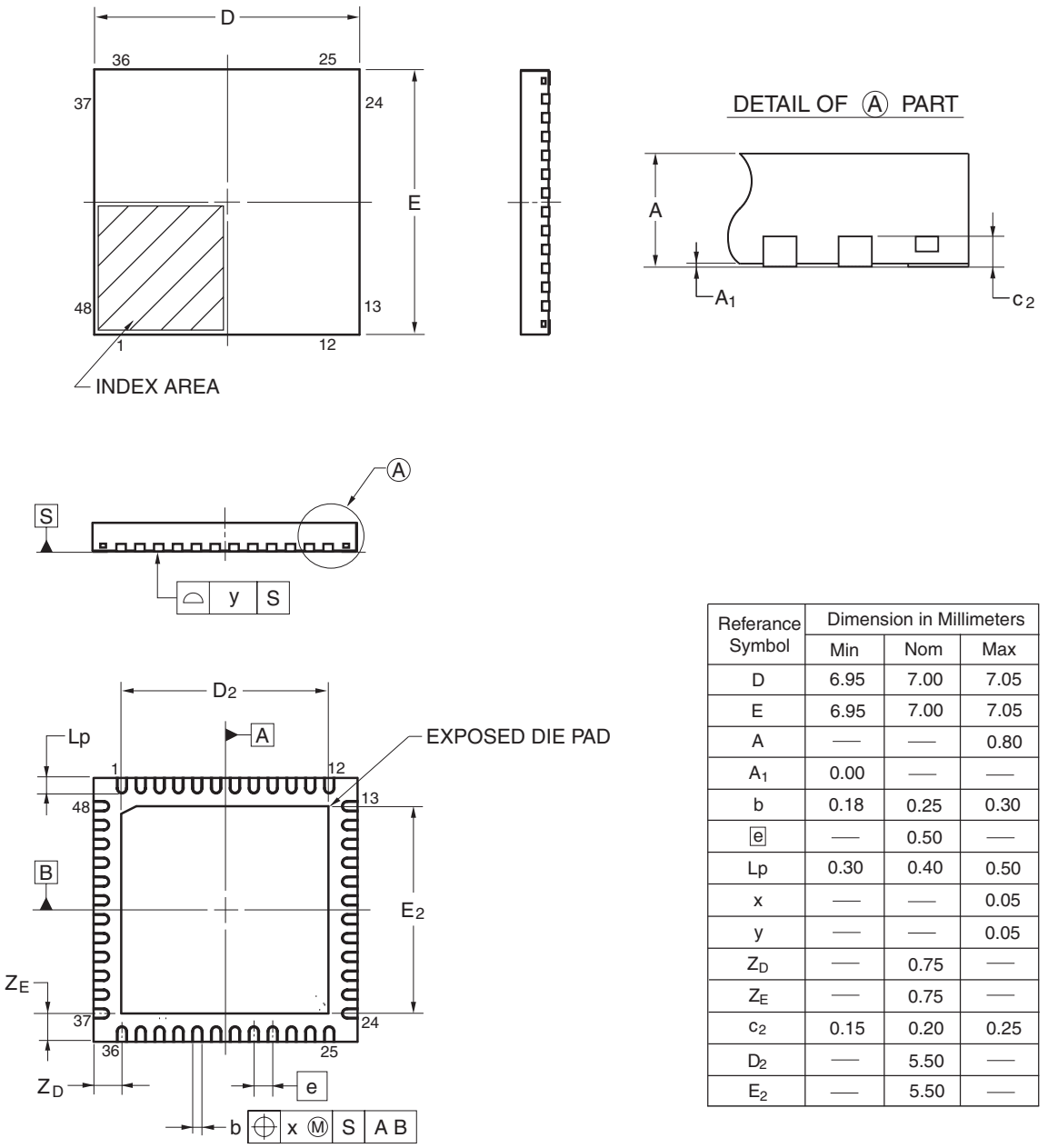

Referance Symbol	Dimension in Millimeters		
	Min	Nom	Max
D	6.95	7.00	7.05
E	6.95	7.00	7.05
A	—	—	0.80
A_1	0.00	—	—
b	0.18	0.25	0.30
e	—	0.50	—
Lp	0.30	0.40	0.50
x	—	—	0.05
y	—	—	0.05
Z_D	—	0.75	—
Z_E	—	0.75	—
c_2	0.15	0.20	0.25
D_2	—	5.50	—
E_2	—	5.50	—

©2013 Renesas Electronics Corporation. All rights reserved.

Figure 1.5 QFN 48-pin

JEITA Package code	RENESAS code	Previous code	MASS(TYP.)[g]
P-HWQFN40-6x6-0.50	PWQN0040KC-A	P40K8-50-4B4-5	0.09

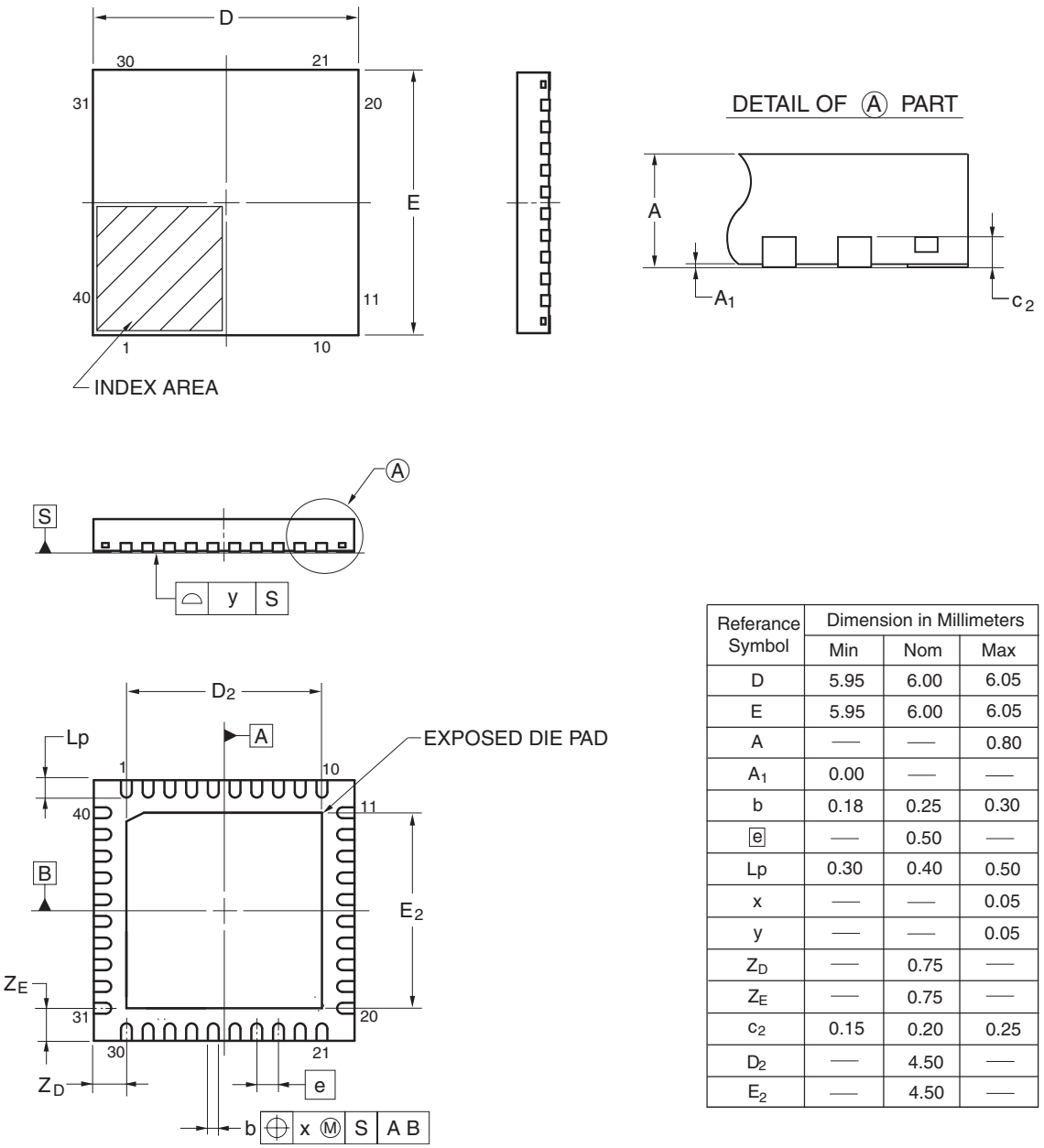

Referance Symbol	Dimension in Millimeters		
	Min	Nom	Max
D	5.95	6.00	6.05
E	5.95	6.00	6.05
A	—	—	0.80
A_1	0.00	—	—
b	0.18	0.25	0.30
e	—	0.50	—
Lp	0.30	0.40	0.50
x	—	—	0.05
y	—	—	0.05
Z_D	—	0.75	—
Z_E	—	0.75	—
c_2	0.15	0.20	0.25
D_2	—	4.50	—
E_2	—	4.50	—

Figure 1.6 QFN 40-pin

Revision History	S124 Microcontroller Group Datasheet

Rev.	Date	Summary
1.00	May 19, 2016	1st release
1.01	Oct 3, 2016	2nd release
1.30	Feb 5, 2018	3rd release

Proprietary Notice

All text, graphics, photographs, trademarks, logos, artwork and computer code, collectively known as content, contained in this document is owned, controlled or licensed by or to Renesas, and is protected by trade dress, copyright, patent and trademark laws, and other intellectual property rights and unfair competition laws. Except as expressly provided herein, no part of this document or content may be copied, reproduced, republished, posted, publicly displayed, encoded, translated, transmitted or distributed in any other medium for publication or distribution or for any commercial enterprise, without prior written consent from Renesas.

Arm® and Cortex® are registered trademarks of Arm Limited. CoreSight™ is a trademark of Arm Limited.

CoreMark® is a registered trademark of the Embedded Microprocessor Benchmark Consortium.

Magic Packet™ is a trademark of Advanced Micro Devices, Inc.

SuperFlash® is a registered trademark of Silicon Storage Technology, Inc. in several countries including the United States and Japan.

Other brands and names mentioned in this document may be the trademarks or registered trademarks of their respective holders.

S124 Microcontroller Group Datasheet

Publication Date: Rev.1.30 Feb 5, 2018

Published by: Renesas Electronics Corporation

General Precautions

1. Precaution against Electrostatic Discharge (ESD)

   A strong electrical field, when exposed to a CMOS device, can cause destruction of the gate oxide and ultimately degrade the device operation. Steps must be taken to stop the generation of static electricity as much as possible, and quickly dissipate it when it occurs. Environmental control must be adequate. When it is dry, a humidifier should be used. This is recommended to avoid using insulators that can easily build up static electricity. Semiconductor devices must be stored and transported in an anti-static container, static shielding bag or conductive material. All test and measurement tools including work benches and floors must be grounded. The operator must also be grounded using a wrist strap. Semiconductor devices must not be touched with bare hands. Similar precautions must be taken for printed circuit boards with mounted semiconductor devices.

2. Processing at power-on

   The state of the product is undefined at the time when power is supplied. The states of internal circuits in the LSI are indeterminate and the states of register settings and pins are undefined at the time when power is supplied. In a finished product where the reset signal is applied to the external reset pin, the states of pins are not guaranteed from the time when power is supplied until the reset process is completed. In a similar way, the states of pins in a product that is reset by an on-chip power-on reset function are not guaranteed from the time when power is supplied until the power reaches the level at which resetting is specified.

3. Input of signal during power-off state

   Do not input signals or an I/O pull-up power supply while the device is powered off. The current injection that results from input of such a signal or I/O pull-up power supply may cause malfunction and the abnormal current that passes in the device at this time may cause degradation of internal elements. Follow the guideline for input signal during power-off state as described in your product documentation.

4. Handling of unused pins

   Handle unused pins in accordance with the directions given under handling of unused pins in the manual. The input pins of CMOS products are generally in the high-impedance state. In operation with an unused pin in the open-circuit state, extra electromagnetic noise is induced in the vicinity of the LSI, an associated shoot-through current flows internally, and malfunctions occur due to the false recognition of the pin state as an input signal become possible.

5. Clock signals

   After applying a reset, only release the reset line after the operating clock signal becomes stable. When switching the clock signal during program execution, wait until the target clock signal is stabilized. When the clock signal is generated with an external resonator or from an external oscillator during a reset, ensure that the reset line is only released after full stabilization of the clock signal. Additionally, when switching to a clock signal produced with an external resonator or by an external oscillator while program execution is in progress, wait until the target clock signal is stable.

6. Voltage application waveform at input pin

   Waveform distortion due to input noise or a reflected wave may cause malfunction. If the input of the CMOS device stays in the area between V_{IL} (Max.) and V_{IH} (Min.) due to noise, for example, the device may malfunction. Take care to prevent chattering noise from entering the device when the input level is fixed, and also in the transition period when the input level passes through the area between V_{IL} (Max.) and V_{IH} (Min.).

7. Prohibition of access to reserved addresses

   Access to reserved addresses is prohibited. The reserved addresses are provided for possible future expansion of functions. Do not access these addresses as the correct operation of the LSI is not guaranteed.

8. Differences between products

   Before changing from one product to another, for example to a product with a different part number, confirm that the change will not lead to problems. The characteristics of a microprocessing unit or microcontroller unit products in the same group but having a different part number might differ in terms of internal memory capacity, layout pattern, and other factors, which can affect the ranges of electrical characteristics, such as characteristic values, operating margins, immunity to noise, and amount of radiated noise. When changing to a product with a different part number, implement a system-evaluation test for the given product.

Notice

1. Descriptions of circuits, software and other related information in this document are provided only to illustrate the operation of semiconductor products and application examples. You are fully responsible for the incorporation or any other use of the circuits, software, and information in the design of your product or system. Renesas Electronics disclaims any and all liability for any losses and damages incurred by you or third parties arising from the use of these circuits, software, or information.
2. Renesas Electronics hereby expressly disclaims any warranties against and liability for infringement or any other claims involving patents, copyrights, or other intellectual property rights of third parties, by or arising from the use of Renesas Electronics products or technical information described in this document, including but not limited to, the product data, drawings, charts, programs, algorithms, and application examples.
3. No license, express, implied or otherwise, is granted hereby under any patents, copyrights or other intellectual property rights of Renesas Electronics or others.
4. You shall not alter, modify, copy, or reverse engineer any Renesas Electronics product, whether in whole or in part. Renesas Electronics disclaims any and all liability for any losses or damages incurred by you or third parties arising from such alteration, modification, copying or reverse engineering.
5. Renesas Electronics products are classified according to the following two quality grades: “Standard” and “High Quality”. The intended applications for each Renesas Electronics product depends on the product’s quality grade, as indicated below.
   "Standard": Computers; office equipment; communications equipment; test and measurement equipment; audio and visual equipment; home electronic appliances; machine tools; personal electronic equipment; industrial robots; etc.
   "High Quality": Transportation equipment (automobiles, trains, ships, etc.); traffic control (traffic lights); large-scale communication equipment; key financial terminal systems; safety control equipment; etc.
   Unless expressly designated as a high reliability product or a product for harsh environments in a Renesas Electronics data sheet or other Renesas Electronics document, Renesas Electronics products are not intended or authorized for use in products or systems that may pose a direct threat to human life or bodily injury (artificial life support devices or systems; surgical implantations; etc.), or may cause serious property damage (space system; undersea repeaters; nuclear power control systems; aircraft control systems; key plant systems; military equipment; etc.). Renesas Electronics disclaims any and all liability for any damages or losses incurred by you or any third parties arising from the use of any Renesas Electronics product that is inconsistent with any Renesas Electronics data sheet, user’s manual or other Renesas Electronics document.
6. When using Renesas Electronics products, refer to the latest product information (data sheets, user’s manuals, application notes, “General Notes for Handling and Using Semiconductor Devices” in the reliability handbook, etc.), and ensure that usage conditions are within the ranges specified by Renesas Electronics with respect to maximum ratings, operating power supply voltage range, heat dissipation characteristics, installation, etc. Renesas Electronics disclaims any and all liability for any malfunctions, failure or accident arising out of the use of Renesas Electronics products outside of such specified ranges.
7. Although Renesas Electronics endeavors to improve the quality and reliability of Renesas Electronics products, semiconductor products have specific characteristics, such as the occurrence of failure at a certain rate and malfunctions under certain use conditions. Unless designated as a high reliability product or a product for harsh environments in a Renesas Electronics data sheet or other Renesas Electronics document, Renesas Electronics products are not subject to radiation resistance design. You are responsible for implementing safety measures to guard against the possibility of bodily injury, injury or damage caused by fire, and/or danger to the public in the event of a failure or malfunction of Renesas Electronics products, such as safety design for hardware and software, including but not limited to redundancy, fire control and malfunction prevention, appropriate treatment for aging degradation or any other appropriate measures. Because the evaluation of microcomputer software alone is very difficult and impractical, you are responsible for evaluating the safety of the final products or systems manufactured by you.
8. Please contact a Renesas Electronics sales office for details as to environmental matters such as the environmental compatibility of each Renesas Electronics product. You are responsible for carefully and sufficiently investigating applicable laws and regulations that regulate the inclusion or use of controlled substances, including without limitation, the EU RoHS Directive, and using Renesas Electronics products in compliance with all these applicable laws and regulations. Renesas Electronics disclaims any and all liability for damages or losses occurring as a result of your noncompliance with applicable laws and regulations.
9. Renesas Electronics products and technologies shall not be used for or incorporated into any products or systems whose manufacture, use, or sale is prohibited under any applicable domestic or foreign laws or regulations. You shall comply with any applicable export control laws and regulations promulgated and administered by the governments of any countries asserting jurisdiction over the parties or transactions.
10. It is the responsibility of the buyer or distributor of Renesas Electronics products, or any other party who distributes, disposes of, or otherwise sells or transfers the product to a third party, to notify such third party in advance of the contents and conditions set forth in this document.
11. This document shall not be reprinted, reproduced or duplicated in any form, in whole or in part, without prior written consent of Renesas Electronics.
12. Please contact a Renesas Electronics sales office if you have any questions regarding the information contained in this document or Renesas Electronics products.

(Note 1) “Renesas Electronics” as used in this document means Renesas Electronics Corporation and also includes its directly or indirectly controlled subsidiaries.

(Note 2) “Renesas Electronics product(s)” means any product developed or manufactured by or for Renesas Electronics.

(Rev.4.0-1 November 2017)

SALES OFFICES Renesas Electronics Corporation http://www.renesas.com

Refer to "http://www.renesas.com/" for the latest and detailed information.

Renesas Electronics America Inc.
1001 Murphy Ranch Road, Milpitas, CA 95035, U.S.A.
Tel: +1-408-432-8888, Fax: +1-408-434-5351

Renesas Electronics Canada Limited
9251 Yonge Street, Suite 8309 Richmond Hill, Ontario Canada L4C 9T3
Tel: +1-905-237-2004

Renesas Electronics Europe Limited
Dukes Meadow, Millboard Road, Bourne End, Buckinghamshire, SL8 5FH, U.K
Tel: +44-1628-651-700, Fax: +44-1628-651-804

Renesas Electronics Europe GmbH
Arcadiastrasse 10, 40472 Düsseldorf, Germany
Tel: +49-211-6503-0, Fax: +49-211-6503-1327

Renesas Electronics (China) Co., Ltd.
Room 1709 Quantum Plaza, No.27 ZhichunLu, Haidian District, Beijing, 100191 P. R. China
Tel: +86-10-8235-1155, Fax: +86-10-8235-7679

Renesas Electronics (Shanghai) Co., Ltd.
Unit 301, Tower A, Central Towers, 555 Langao Road, Putuo District, Shanghai, 200333 P. R. China
Tel: +86-21-2226-0888, Fax: +86-21-2226-0999

Renesas Electronics Hong Kong Limited
Unit 1601-1611, 16/F., Tower 2, Grand Century Place, 193 Prince Edward Road West, Mongkok, Kowloon, Hong Kong
Tel: +852-2265-6688, Fax: +852 2886-9022

Renesas Electronics Taiwan Co., Ltd.
13F, No. 363, Fu Shing North Road, Taipei 10543, Taiwan
Tel: +886-2-8175-9600, Fax: +886 2-8175-9670

Renesas Electronics Singapore Pte. Ltd.
80 Bendemeer Road, Unit #06-02 Hyflux Innovation Centre, Singapore 339949
Tel: +65-6213-0200, Fax: +65-6213-0300

Renesas Electronics Malaysia Sdn.Bhd.
Unit 1207, Block B, Menara Amcorp, Amcorp Trade Centre, No. 18, Jln Persiaran Barat, 46050 Petaling Jaya, Selangor Darul Ehsan, Malaysia
Tel: +60-3-7955-9390, Fax: +60-3-7955-9510

Renesas Electronics India Pvt. Ltd.
No.777C, 100 Feet Road, HAL 2nd Stage, Indiranagar, Bangalore 560 038, India
Tel: +91-80-67208700, Fax: +91-80-67208777

Renesas Electronics Korea Co., Ltd.
17F, KAMCO Yangjae Tower, 262, Gangnam-daero, Gangnam-gu, Seoul, 06265 Korea
Tel: +82-2-558-3737, Fax: +82-2-558-5338

© 2018 Renesas Electronics Corporation. All rights reserved.

Colophon 7.0

Renesas Synergy™ Platform
S124 Microcontroller Group

Renesas Electronics Corporation

R01DS0264EU0130

Mouser Electronics

Authorized Distributor

Click to View Pricing, Inventory, Delivery & Lifecycle Information:

Renesas Electronics:

R7FS124773A01CNB#AC0 R7FS124773A01CNE#AC0 R7FS124772A01CLM#AC0 R7FS124773A01CFL#AA0 R7FS124773A01CFM#AA0 R7FS124763A01CFM#AA0 R7FS124762A01CLM#AC0 R7FS124763A01CFL#AA0 R7FS124773A01CNF#AC0 R7FS124763A01CNF#AC0 R7FS124763A01CNE#AC0 R7FS124763A01CNB#AC0 R7FS124773A01CNF#AC1 R7FS124773A01CNE#AC1 R7FS124763A01CFL#AA1 R7FS124772A01CLM#AC1 R7FS124773A01CFL#AA1 R7FS124762A01CLM#AC1 R7FS124773A01CNB#AC1 R7FS124763A01CFM#AA1 R7FS124773A01CFM#AA1 R7FS124763A01CFL#HA1 R7FS124773A01CFL#HA1

Мы молодая и активно развивающаяся компания в области поставок электронных компонентов. Мы поставляем электронные компоненты отечественного и импортного производства напрямую от производителей и с крупнейших складов мира.

Благодаря сотрудничеству с мировыми поставщиками мы осуществляем комплексные и плановые поставки широчайшего спектра электронных компонентов.

Собственная эффективная логистика и склад в обеспечивает надежную поставку продукции в точно указанные сроки по всей России.

Мы осуществляем техническую поддержку нашим клиентам и предпродажную проверку качества продукции. На все поставляемые продукты мы предоставляем гарантию .

Осуществляем поставки продукции под контролем ВП МО РФ на предприятия военно-промышленного комплекса России , а также работаем в рамках 275 ФЗ с открытием отдельных счетов в уполномоченном банке. Система менеджмента качества компании соответствует требованиям ГОСТ ISO 9001.

Минимальные сроки поставки, гибкие цены, неограниченный ассортимент и индивидуальный подход к клиентам являются основой для выстраивания долгосрочного и эффективного сотрудничества с предприятиями радиоэлектронной промышленности, предприятиями ВПК и научно-исследовательскими институтами России.

С нами вы становитесь еще успешнее!

Наши контакты:

Телефон: +7 812 627 14 35

Электронная почта: sales@st-electron.ru

Адрес: 198099, Санкт-Петербург, Промышленная ул, дом № 19, литера Н, помещение 100-Н Офис 331