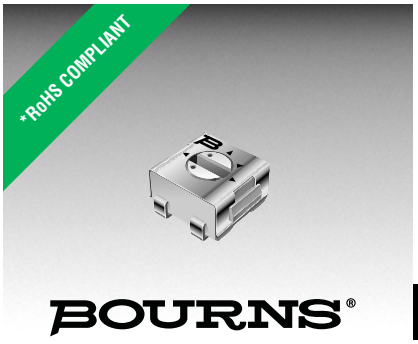

Features

- Surface Mount / Single Turn / Cermet Industrial / Sealed
- Compatible with surface mount manufacturing processes
- Compatible with popular vacuum pick-and-place equipment
- J-hook, gull-wing and pinned configurations
- Side adjust available
- Meets EIA/EIAJ/IPC/VECI SMD standard trimmer designs
- RoHS compliant* - see processing information on lead free surface mount trimmers
- For trimmer applications/processing guidelines, click here

3314 - 4 mm Square Trimpot® Trimming Potentiometer

Electrical Characteristics

Standard Resistance Range
.....10 ohms to 2 megohms
(see standard resistance table)
Resistance Tolerance ..... ±20 % std.
(tighter tolerance available)
End Resistance ..... 1 % or 2 ohms max.
(whichever is greater)
Contact Resistance Variation
.....3 % or 3 ohms
Resolution ..... Infinite
Insulation Resistance ..... 500 vdc.
100 megohms min.
Dielectric Strength
Sea Level..... 500 vac (1 minute)
Adjustment Angle ..... 210 ° nom.

Environmental Characteristics

Power Rating (300 volts max.)
70 °C .....0.25 watt
125 °C .....0 watt
Temperature Range ... -55 °C to +125 °C
Temperature Coefficient ... ±100 ppm/°C
Humidity .....90-98 % RH,
10 cycles, 240 hours
TRS ±2 %; IR 10 megohms
Vibration .....20 G TRS ±1 %; VRS ±1 %
Shock .....100 G TRS ±1 %; VRS ±1 %
Load Life
....(@ 70 °C Rated Power 1000 Hours)
TRS ±3 %
Rotational Life .....100 cycles
TRS ±3 %
Thermal Shock .....5 cycles
TRS ±2 %; VRS ±1 %

Physical Characteristics

Mechanical Angle ..... 240 ° nom.
Torque.....180 g-cm typical
Stop Strength .....300 g-cm typical
Pushover Strength (Z Style)
.....2 kilograms (4.4 lbs.) minimum
Weight .....Approximately 0.01 oz.
Marking.....Manufacturer's code,
resistance code and date code
Wiper ..... 50 % (Actual TR) ±10 %
Flammability .....U.L. 94V-0
Standard Packaging
J, G and R ..... 500 pcs./7 " reel
S and Z..... 200 pcs./7 " reel
H.....100 pcs./tube
Adjustment Tool.....H-90

DIMENSIONS: MM (INCHES)
TOLERANCES: ± 0.25 (.010) EXCEPT WHERE NOTED

Product Dimensions

3314J-1

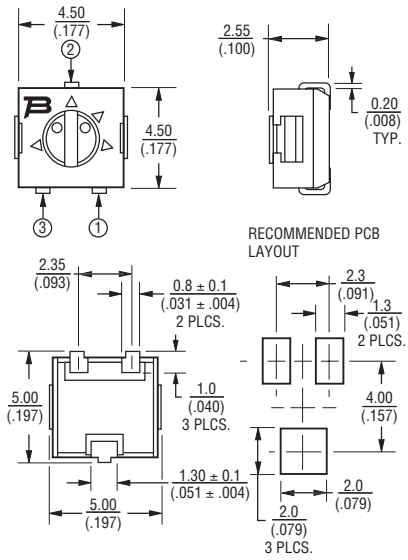

3314G-1

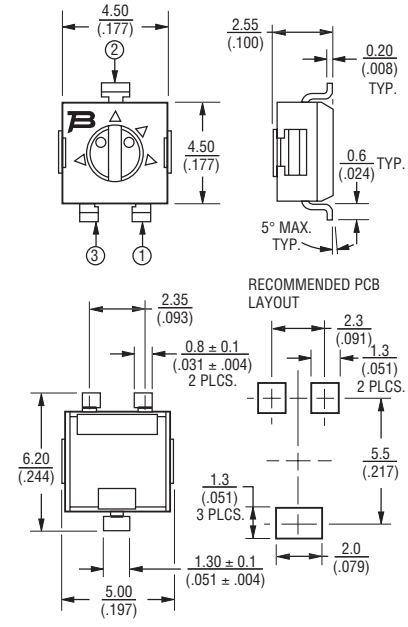

3314J-1, G-1, R-1, H-1 (Bourns Marking, Straight Slot)

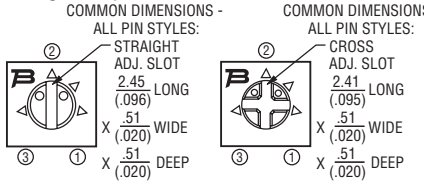

3314J-2, G-2, R-2, H-2 (Bourns Marking, Cross Slot)

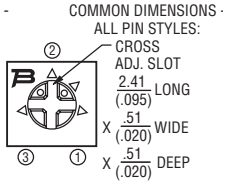

3314J-3, G-3, R-3, H-3 (Reverse Marking, Straight Slot)

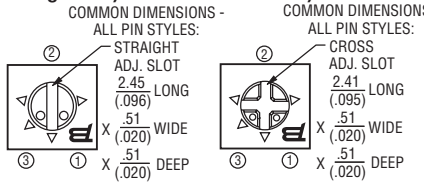

3314J-4, G-4, R-4, H-4 (Reverse Marking, Cross Slot)

How To Order

3314 J - 1 - 502 E

Model
Style
Standard or Modified Product Indicator (Styles J, G, R, H & S)
-1 = Single Slot
-2 = Cross Slot
-3 = Single Slot w/Reverse Marking
-4 = Cross Slot w/Reverse Marking
Product Indicator (Style Z only)
-GA4 = Single Slot
-1 = Cross Slot
-3 = Single Slot w/Reverse Marking
-4 = Cross Slot w/Reverse Marking
Resistance Code
Embossed Tape Designator**
E = Styles J, G and R: 500 pcs./7 " reel
Styles S and Z: 200 pcs./7 " reel
G = Styles J and G: 3000 pcs./13 " reel
Style R: 2500 pcs./13 " reel
Styles S and Z: 1000 pcs./13 " reel
**Style H is available in tube packaging only.

Standard Resistance Table

Resistance (Ohms)	Resistance Code
10	100
20	200
50	500
100	**101**
200	**201**
500	**501**
1,000	**102**
2,000	**202**
5,000	**502**
10,000	**103**
20,000	**203**
50,000	**503**
100,000	**104**
200,000	204
250,000	254
500,000	504
1,000,000	105
2,000,000	205

Popular distribution values listed in boldface.
Special resistances available.

*RoHS Directive 2002/95/EC Jan. 27, 2003 including annex and RoHS Recast 2011/65/EU June 8, 2011.
Specifications are subject to change without notice.
Customers should verify actual device performance in their specific applications.

3314 - 4 mm Square Trimpot® Trimming Potentiometer

BOURNS®

Product Dimensions

3314R-1

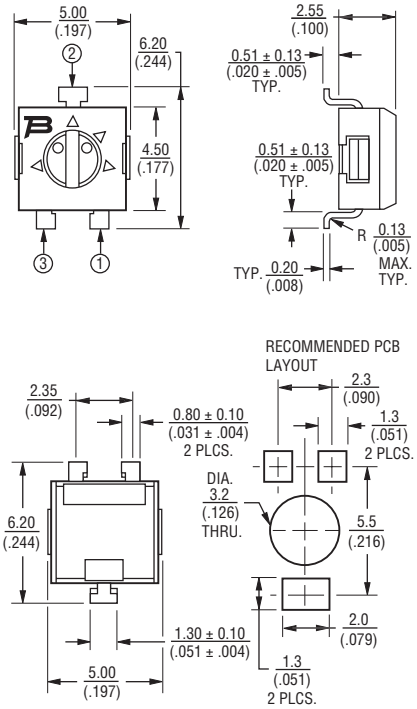

3314H-1

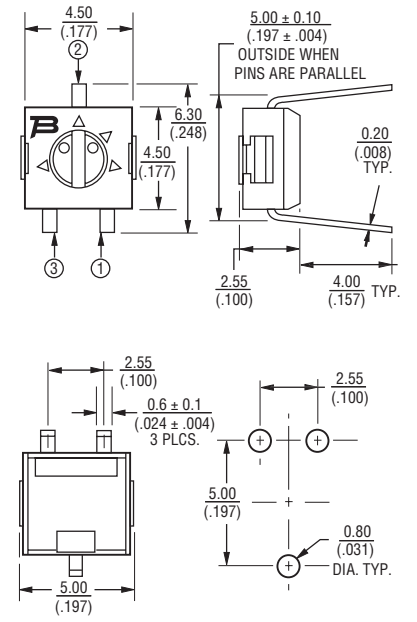

Packaging Specifications - J, G and R Styles

(J, G Styles)

TAPE

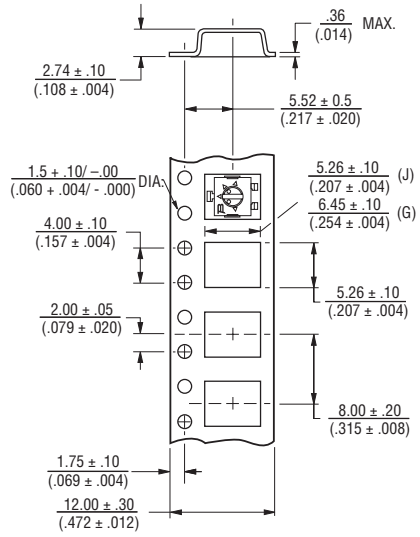

REEL

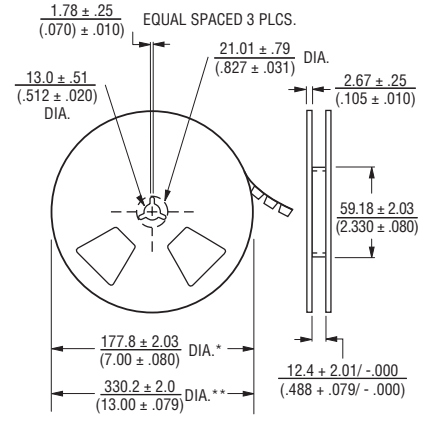

* Embossed Tape Designator "E"
** Embossed Tape Designator "G"
(See How To Order chart for further information.)

Meets EIA specification 481.

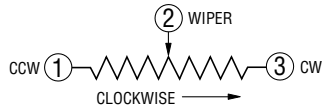

(R Style)

TAPE

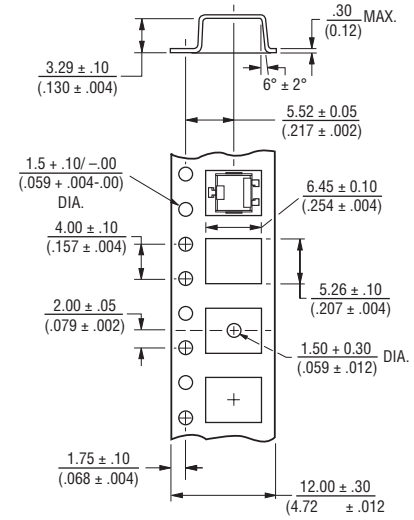

REEL

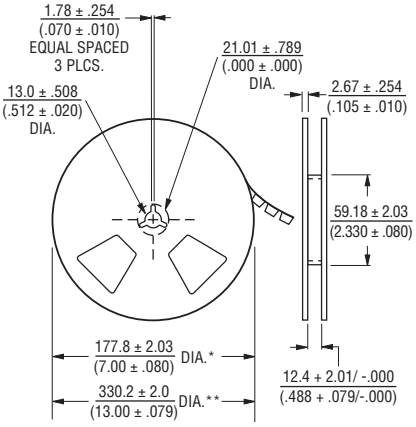

* Embossed Tape Designator "E"
** Embossed Tape Designator "G"
(See How To Order chart for further information.)

Meets EIA specification 481.

DIMENSIONS: MM (INCHES)

TOLERANCES: ± 0.25 (.010) EXCEPT WHERE NOTED

Specifications are subject to change without notice.
Customers should verify actual device performance in their specific applications.

Product Dimensions

3314S-1
(Bourns Marking, Straight Slot)

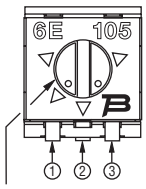

ROTOR POSITIONED AS SHOWN WITHIN ± 22° OF CENTERLINE OF TERMINAL 2

3314S-2
(Bourns Marking, Cross Slot)

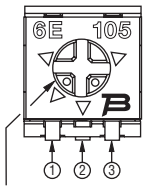

ROTOR POSITIONED AS SHOWN WITHIN ± 22° OF CENTERLINE OF TERMINAL 2

3314S-3
(Reverse Marking, Straight Slot)

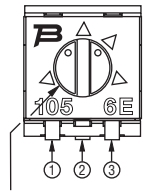

ROTOR POSITIONED AS SHOWN WITHIN ± 22° OF CENTERLINE OF TERMINAL 2

3314S-4
(Reverse Marking, Cross Slot)

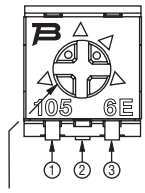

ROTOR POSITIONED AS SHOWN WITHIN ± 22° OF CENTERLINE OF TERMINAL 2

3314S
Common Dimensions

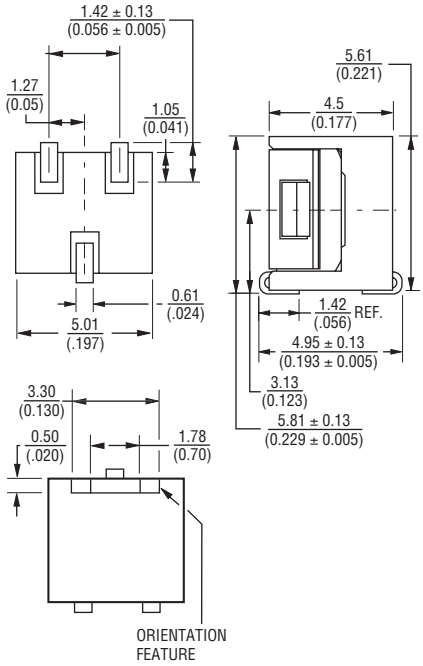

RECOMMENDED PCB LAYOUT

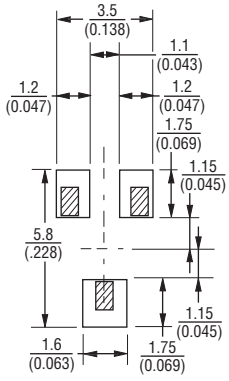

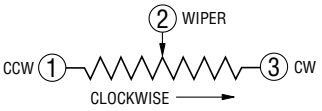

DIMENSIONS: MM (INCHES)

TOLERANCES: ± 0.30 (.012) EXCEPT WHERE NOTED

Packaging Specifications

(S Style)

TAPE

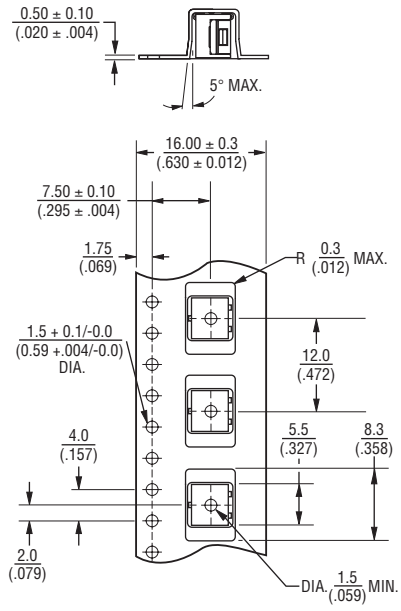

REEL

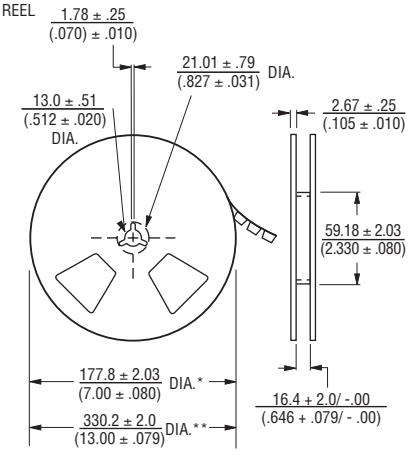

* Embossed Tape Designator "E"
** Embossed Tape Designator "G"
(See How To Order chart for further information.)

Meets EIA specification 481.

Specifications are subject to change without notice.
Customers should verify actual device performance in their specific applications.

Product Dimensions

3314Z-1-(RC) E
(Cross Slot)

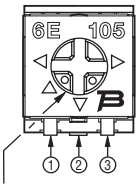

ROTOR POSITIONED AS SHOWN WITHIN ± 22° OF CENTERLINE OF TERMINAL 2

3314Z-GA4-(RC) E
(Straight Slot)

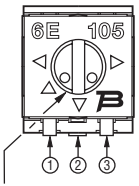

ROTOR POSITIONED AS SHOWN WITHIN ± 22° OF CENTERLINE OF TERMINAL 2

3314Z-3
(Reverse Marking, Straight Slot)

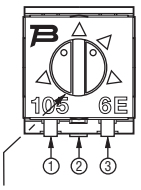

ROTOR POSITIONED AS SHOWN WITHIN ± 22° OF CENTERLINE OF TERMINAL 2

3314Z-4-(RC) E
(Reverse Marking, Cross Slot)

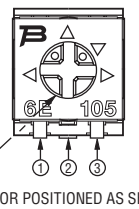

ROTOR POSITIONED AS SHOWN WITHIN ± 22° OF CENTERLINE OF TERMINAL 2

3314Z
Common Dimensions

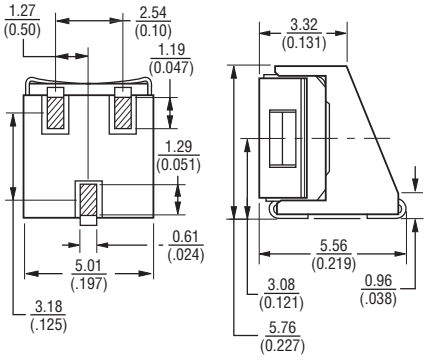

RECOMMENDED PCB LAYOUT

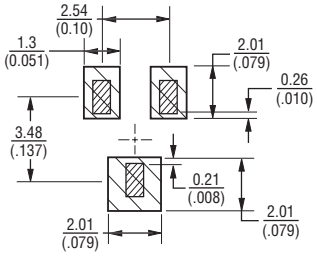

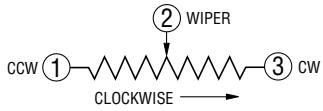

DIMENSIONS: MM (INCHES)

TOLERANCES: ± 0.25 (.010) EXCEPT WHERE NOTED

Packaging Specifications

(Z Style)

TAPE

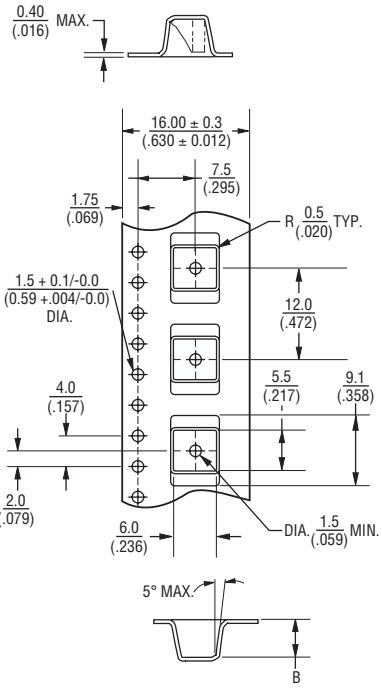

REEL

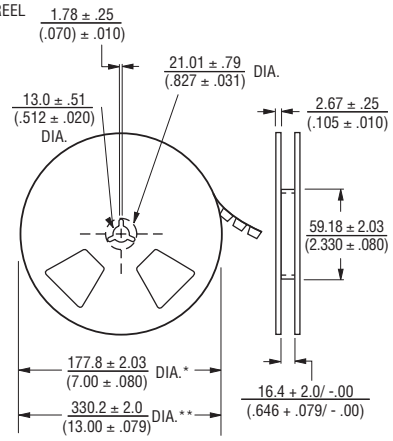

* Embossed Tape Designator "E"
** Embossed Tape Designator "G"
(See How To Order chart for further information.)

Meets EIA specification 481.

Specifications are subject to change without notice.
Customers should verify actual device performance in their specific applications.

Мы молодая и активно развивающаяся компания в области поставок электронных компонентов. Мы поставляем электронные компоненты отечественного и импортного производства напрямую от производителей и с крупнейших складов мира.

Благодаря сотрудничеству с мировыми поставщиками мы осуществляем комплексные и плановые поставки широчайшего спектра электронных компонентов.

Собственная эффективная логистика и склад в обеспечивает надежную поставку продукции в точно указанные сроки по всей России.

Мы осуществляем техническую поддержку нашим клиентам и предпродажную проверку качества продукции. На все поставляемые продукты мы предоставляем гарантию .

Осуществляем поставки продукции под контролем ВП МО РФ на предприятия военно-промышленного комплекса России , а также работаем в рамках 275 ФЗ с открытием отдельных счетов в уполномоченном банке. Система менеджмента качества компании соответствует требованиям ГОСТ ISO 9001.

Минимальные сроки поставки, гибкие цены, неограниченный ассортимент и индивидуальный подход к клиентам являются основой для выстраивания долгосрочного и эффективного сотрудничества с предприятиями радиоэлектронной промышленности, предприятиями ВПК и научно-исследовательскими институтами России.

С нами вы становитесь еще успешнее!

Наши контакты:

Телефон: +7 812 627 14 35

Электронная почта: sales@st-electron.ru

Адрес: 198099, Санкт-Петербург, Промышленная ул, дом № 19, литера Н, помещение 100-Н Офис 331