Buck-Boost transformers are small, single phase, dry type distribution transformers designed and shipped as insulating/isolating transformers. They have a dual voltage primary and a dual voltage secondary. These transformers can be connected for a wide range of voltage combinations. The most common use is to buck (lower) or boost (raise) the supply voltage a small amount, usually 5 to 27%. Buck-boost transformers are in compliance with NEC Article 210.9, Exception 1 when field connected as an autotransformer.

The major advantages of Buck-boost transformers are their low cost, compact size and light weight. They are also more efficient and cost less than equivalent isolation transformers. When connected as an autotransformer, they can handle loads up to 20 times the nameplate rating. A buck-boost transformer is the ideal solution for changing line voltage by small amounts.

When a buck-boost has the primary and secondary windings connected, per recommended instructions, it becomes an autotransformer. Now, only the secondary windings are transforming voltage and current. The majority of the kVA load passes directly from the supply to the load. This is the reason buck-boost transformers can supply a load with a much larger kVA rating than the nameplate indicates.

Low voltage lighting control applications

SolaHD buck-boost transformers are designed to supply power to low voltage lighting circuits, control panels or other systems requiring 12, 16, 24, 32, or 48 Volts. When connected as an insulating transformer (by following the wiring diagram located after the specification tables on the inside of the transformer case), the transformer's capacity matches the nameplate kVA rating.

SolaHD buck-boost transformers are also suited for low voltage landscape lighting. They are UL Listed for outdoor service and their compact size makes them the perfect solution for providing power to accent lighting applications. Electrical Connection diagrams are shown at the end of this section.

Use dimmers on the output of the transformer that are designed and rated for use with magnetic loads. We strongly recommend contacting the dimmer manufacturer for advice on your specific lighting application.

Certifications and Compliances

- c UL us Listed
  - UL 506
  - CSA C22.2 No. 66

c UL us
E77014

Accessories

- Surge Protective Devices
- Active Tracking® Filters

Selection Steps

1. **Input Line Voltage**
   Measure the supply voltage with a voltmeter.

2. **Voltage Required for the Load**
   Check the load equipment to determine the voltage requirement.

3. **kVA or Ampere Rating of the Load**
   Find either the load kVA or the load amperage requirements. This information is listed on the nameplate of the load equipment.

4. **Frequency**
   Either 50 or 60 Hz. The frequency of the transformer must match the frequency of the load.

5. **Number of Phases**
   Single or three phase line and load must match. (A transformer cannot convert single to three phase.) A common application is to make a single phase connection from a three phase supply by using one phase of the three phase supply circuit. Be careful not to overload that phase of the three phase supply. For buck-boost applications the supply must provide load kVA – not just the nameplate rating of the buck-boost. Refer to the Selection Tables on the following pages.

Three phase, buck-boost applications require two or three transformers. Check the “Quantity Required” column of the Three Phase Selection Tables for the exact quantity.

Fusing Buck-Boost Transformers

For determining the correct size of breaker or fuse for a given range of input or output ampere ratings, refer to Section 450.4, of the National Electric Code (NEC).

Where an overcurrent protection device is required, the electrical connections and selection tables will reference appropriately.

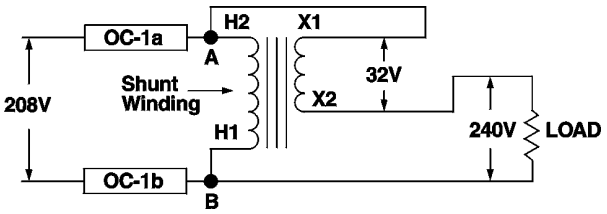

Overcurrent devices OC-1a and OC-1b are shown correctly installed in accordance with NEC 450.4. Locating an overcurrent device in series with the shunt winding anywhere between A and B is not permitted. The shunt winding is the winding common to both the input and the output circuits.

Using the Selection Tables

1. Determine if you are trying to Boost (raise) or Buck (lower) your voltage. Select an input/output voltage combination that comes closest to matching your application from the appropriate single or three phase charts on the following pages.

2. Move across your selected input/output voltage row to the amperage or kVA rating closest to, but greater than the rating required by your load.

3. Reading the top of the column will give you the catalog number of the exact buck-boost transformer you need. See the Specification Tables on the next page.

4. Connect the transformers according to the diagram indicated. See the Electrical Connections section at the end of this section. Connection diagrams are packed with each transformer.

Specification Tables

Group 1 – 120 x 240 Volt Primary, 12/24 Volt Secondary

KVA	Catalog Number	Maximum Secondary Amperage		Height in (mm)	Width in (mm)	Depth in (mm)	Approx. Ship Weight lbs (kg)	Design Style	Elec Conn
		12 V	24 V						
Non–Encapsulated – 50/60 Hz, Single Phase									
0.05	**HS19B50**	4.16	2.08	6.00 (152.4)	4.00 (101.6)	3.00 (76.2)	2.0 (0.91)	2	1
0.1	**HS19B100**	8.33	4.16	6.00 (152.4)	4.00 (101.6)	3.00 (76.2)	4.0 (1.82)	2	1
0.15	**HS19B150**	12.5	6.25	7.50 (190.5)	4.00 (101.6)	4.00 (101.6)	5.0 (2.27)	2	1
0.25	**HS19B250**	20.8	10.4	7.50 (190.5)	4.00 (101.6)	4.00 (101.6)	8.0 (3.64)	2	1
Encapsulated – 60 Hz, Single Phase									
0.5	**HS19F500B**	41.6	20.8	10.00 (254.0)	6.00 (152.4)	5.00 (127.0)	22.0 (10.00)	3	1
0.75	**HS19F750B**	62.5	31.2	10.00 (254.0)	6.00 (152.4)	5.00 (127.0)	27.0 (12.27)	3	1
1	**HS19F1B**	83.3	41.6	10.00 (254.0)	6.00 (152.4)	5.00 (127.0)	28.0 (12.73)	3	1
1.5	**HS19F1.5A**	125	62.5	12.00 (304.8)	10.00 (254.0)	7.00 (177.8)	38.0 (17.27)	4	1
2	**HS19F2A**	166.6	83.3	12.00 (304.8)	10.00 (254.0)	7.00 (177.8)	45.0 (20.45)	4	1
3	**HS19F3A**	250	125	12.00 (304.8)	10.00 (254.0)	7.00 (177.8)	55.0 (25.00)	4	1
5	**HS19F5A**	416.5	208.3	17.00 (431.8)	14.00 (355.6)	9.00 (228.6)	100.0 (45.45)	4	1
7.5	**HS19F7.5A**	625	312.5	17.00 (431.8)	14.00 (355.6)	9.00 (228.6)	135.0 (61.36)	4	1

Group 2 – 120 x 240 Volt Primary, 16/32 Volt Secondary

KVA	Catalog Number	Maximum Secondary Amperage		Height in (mm)	Width in (mm)	Depth in (mm)	Approx. Ship Weight lbs (kg)	Design Style	Elec Conn
		16 V	32 V						
Non–Encapsulated – 50/60 Hz, Single Phase									
0.15	**HS20B150**	9.38	4.69	8.00 (203.2)	4.00 (101.6)	4.00 (101.6)	6.0 (2.73)	2	2
0.25	**HS20B250**	15.6	7.81	8.00 (203.2)	4.00 (101.6)	4.00 (101.6)	8.0 (3.64)	2	2
Encapsulated – 60 Hz, Single Phase									
0.5	**HS20F500B**	31.2	15.6	10.00 (254.0)	6.00 (152.4)	5.00 (127.0)	22.0 (10.00)	3	2
0.75	**HS20F750B**	46.8	23.4	10.00 (254.0)	6.00 (152.4)	5.00 (127.0)	27.0 (12.27)	3	2
1	**HS20F1B**	62.5	31.2	10.00 (254.0)	6.00 (152.4)	5.00 (127.0)	28.0 (12.73)	3	2
1.5	**HS20F1.5A**	93.7	46.8	12.00 (304.8)	10.00 (254.0)	7.00 (177.8)	38.0 (17.27)	4	2
2	**HS20F2A**	125	62.5	12.00 (304.8)	10.00 (254.0)	7.00 (177.8)	45.0 (20.45)	4	2
3	**HS20F3A**	187.5	93.7	12.00 (304.8)	10.00 (254.0)	7.00 (177.8)	55.0 (25.00)	4	2
5	**HS20F5A**	312	156	17.00 (431.8)	14.00 (355.6)	9.00 (228.6)	100.0 (45.45)	4	2
7.5	**HS20F7.5A**	468	234	17.00 (431.8)	14.00 (355.6)	9.00 (228.6)	135.0 (61.36)	4	2

Note: Weights and dimensions may change and should not be used for construction purposes.

Specification Tables – continued

Group 3 – 240 x 480 Volt Primary, 24/48 Volt Secondary

KVA	Catalog Number	Maximum Secondary Amperage		Height in (mm)	Width in (mm)	Depth in (mm)	Approx. Ship Weight lbs (kg)	Design Style	Elec Conn
		24 V	48 V						
Non–Encapsulated – 50/60 Hz, Single Phase									
0.15	**HS22B150**	6.25	3.13	8.00 (203.2)	4.00 (101.6)	3.00 (76.2)	5.0 (2.27)	2	3
0.25	**HS22B250**	10.4	5.2	8.00 (203.2)	4.00 (101.6)	3.00 (76.2)	8.0 (3.64)	2	3
Encapsulated – 60 Hz, Single Phase									
0.5	**HS22F500B**	20.8	10.4	8.00 (203.2)	6.00 (152.4)	5.00 (127.0)	22.0 (10.00)	3	3
0.75	**HS22F750B**	31.2	15.6	10.00 (254.0)	6.00 (152.4)	5.00 (127.0)	27.0 (12.27)	3	3
1	**HS22F1B**	41.6	20.8	10.00 (254.0)	6.00 (152.4)	5.00 (127.0)	28.0 (12.73)	3	3
1.5	**HS22F1.5A**	62.5	31.2	12.00 (304.8)	10.00 (254.0)	7.00 (177.8)	38.0 (17.27)	4	3
2	**HS22F2A**	83.3	41.6	12.00 (304.8)	10.00 (254.0)	7.00 (177.8)	45.0 (20.45)	4	3
3	**HS22F3A**	125	62.5	12.00 (304.8)	10.00 (254.0)	7.00 (177.8)	55.0 (25.00)	4	3
5	**HS22F5A**	208	104	17.00 (431.8)	14.00 (355.6)	9.00 (228.6)	100.0 (45.45)	4	3
7.5	**HS22F7.5A**	312	156	17.00 (431.8)	14.00 (355.6)	9.00 (228.6)	135.0 (61.36)	4	3

Note: Weights and dimensions may change and should not be used for construction purposes.

Electrical Connections for Low Voltage Applications

⏚ = Earth Ground

120 X 240 Volt Primary,
12/24 Volt Secondary
Taps: None

1

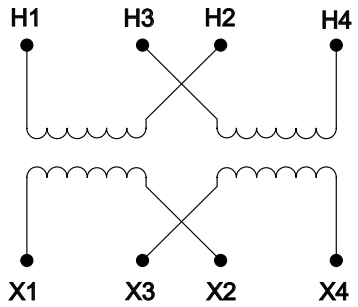

Primary Voltage	Interconnect	Connect Lines To
240	H2 to H3	H1 & H4
120	H1 to H3 H2 to H4	H1 & H4
Secondary Voltage	**Interconnect**	**Connect Lines To**
24	X2 to X3	X1 & X4
12-0-12	X2 to X3 X2 to ⏚	X1-X2-X4
12	X1 to X3 X2 to X4	X1 & X4

HS19 and S19 Series

120 X 240 Volt Primary,
16/32 Volt Secondary
Taps: None

2

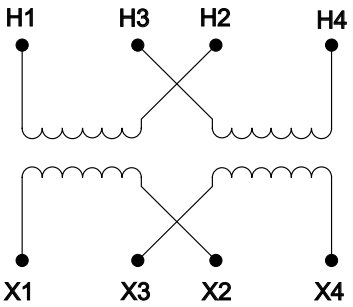

Primary Voltage	Interconnect	Connect Lines To
240	H2 to H3	H1 & H4
120	H1 to H3 H2 to H4	H1 & H4
Secondary Voltage	**Interconnect**	**Connect Lines To**
32	X2 to X3	X1 & X4
16-0-16	X2 to X3 X2 to ⏚	X1-X2-X4
16	X1 to X3 X2 to X4	X1 & X4

HS20 and S20 Series

240 X 480 Volt Primary,
24/48 Volt Secondary
Taps: None

3

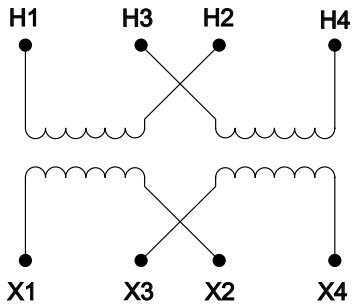

Primary Voltage	Interconnect	Connect Lines To
480	H2 to H3	H1 & H4
240	H1 to H3 H2 to H4	H1 & H4
Secondary Voltage	**Interconnect**	**Connect Lines To**
48	X2 to X3	X1 & X4
24-0-24	X2 to X3 X2 to ⏚	X1-X2-X4
24	X1 to X3 X2 to X4	X1 & X4

HS22 and S22 Series

Design Styles

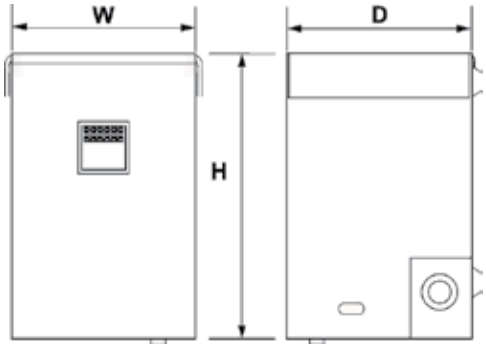

Style 2 - Non-Encapsulated

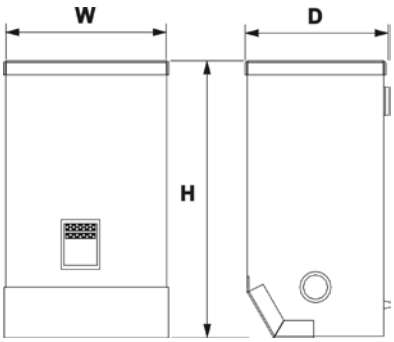

Style 3 - Encapsulated

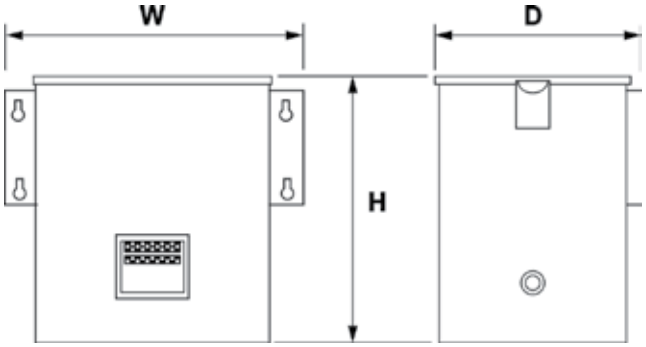

Style 4 - Encapsulated

Custom Design Styles

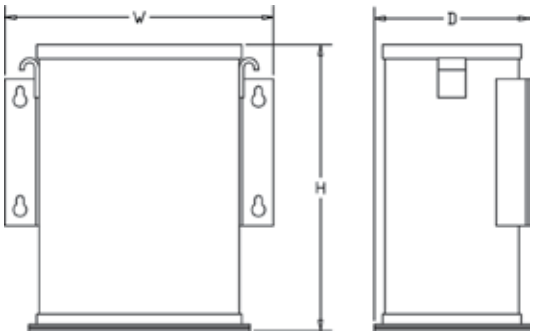

Style 5 - Encapsulated

Available for all encapsulated kVA sizes (For Type 4, 12 and 4X)

Selection Tables: Single Phase

Table 1: Using Group 1 (120 x 240 V Primary, 12/24 V Secondary) Transformers

Input Voltage	Output Voltage	Quantity Req'd	Connection Diagram *	Application Data	Catalog Number						
					HS19B50	HS19B100	HS19B150	HS19B250	HS19F500B	HS19F750B	HS19F1B
BOOSTING											
100	120	1	**B1**	kVA	0.25	0.5	0.75	1.25	2.5	3.75	5.0
				Load Amps	2.08	4.16	6.25	10.4	20.8	31.2	41.6
				Fuse Size	6.0	10.0	15.0	25.0	35.0	50.0	70.0
109	120	1	**A1**	kVA	0.5	1.0	1.5	2.5	5.0	7.5	10.0
				Load Amps	4.16	8.33	12.5	20.8	41.6	62.5	83.3
				Fuse Size	10.0	15.0	20.0	30.0	60.0	90.0	125.0
189	208	1	**D1**	kVA	0.43	0.87	1.3	2.16	4.33	6.49	8.65
				Load Amps	2.08	4.16	6.25	10.4	20.8	31.2	41.6
				Fuse Size	6.0	10.0	15.0	15.0	30.0	45.0	60.0
197	208	1	**C1**	kVA	0.87	1.73	2.6	4.33	8.65	13.0	17.3
				Load Amps	4.16	8.33	12.5	20.8	41.6	62.5	83.3
				Fuse Size	6.0	15.0	20.0	30.0	60.0	90.0	110.0
208	229	1	**D1**	kVA	0.48	0.95	1.43	2.38	4.77	7.15	9.54
				Load Amps	2.08	4.16	6.25	10.4	20.8	31.2	41.6
				Fuse Size	6.0	10.0	15.0	15.0	30.0	45.0	60.0
218 **	240	1	**D1**	kVA	0.5	1.0	1.5	2.5	5.0	7.5	10.0
				Load Amps	2.08	4.16	6.25	10.4	20.8	31.2	41.6
				Fuse Size	6.0	10.0	15.0	15.0	30.0	45.0	60.0
229	240	1	**C1**	kVA	1.0	2.0	3.0	5.0	10.0	15.0	20.0
				Load Amps	4.16	8.33	12.5	20.8	41.6	62.5	83.3
				Fuse Size	6.0	15.0	20.0	30.0	60.0	90.0	110.0
BUCKING											
132 **	120	1	**A2**	kVA	0.55	1.1	1.65	2.75	5.5	8.25	11.0
				Load Amps	4.58	9.16	13.75	22.9	45.8	68.7	91.6
				Fuse Size	10.0	15.0	20.0	30.0	60.0	80	110
144 **	120	1	**B2**	kVA	0.3	0.6	0.9	1.5	3.0	4.5	6.0
				Load Amps	2.5	5.0	7.5	12.5	25	37.5	50.0
				Fuse Size	6.0	10.0	15.0	15.0	30.0	40.0	60.0
229	208	1	**D2**	kVA	0.48	0.95	1.43	2.38	4.77	7.15	9.54
				Load Amps	2.29	4.58	6.88	11.4	22.9	34.4	45.8
				Fuse Size	6.0	10.0	15.0	15.0	30.0	40.0	60.0
252 **	240	1	**C2**	kVA	1.04	2.1	3.15	5.25	10.5	15.7	21
				Load Amps	4.34	8.75	13.13	21.8	43.7	65.6	87.5
				Fuse Size	10.0	15.0	15.0	30.0	60.0	80.0	110.0
264 **	240	1	**D2**	kVA	0.55	1.1	1.65	2.75	5.5	8.25	11.0
				Load Amps	2.29	4.58	6.88	11.4	22.9	34.3	45.8
				Fuse Size	6.0	10.0	15.0	15.0	30.0	40.0	60.0

* For alternate electrical connection diagrams, refer to the section immediately following the selection tables.
** Shaded items are 60 Hz only (All other ratings shown are 50/60 Hz).

Selection Tables: Single Phase

Table 1: Using Group 1 (120 x 240 V Primary, 12/24 V Secondary) Transformers

Input Voltage	Output Voltage	Quantity Req'd	Connection Diagram *	Application Data	Catalog Number				
					HS19F1.5A	HS19F2A	HS19F3A	HS19F5A	HS19F7.5A
BOOSTING									
100	120	1	**B1**	kVA	7.5	10.0	15.0	25.0	37.5
				Load Amps	62.5	83.3	125.0	208.0	312.0
				Fuse Size	100.0	125.0	200.0	350.0	500.0
109	120	1	**A1**	kVA	15.0	20.0	30.0	49.9	75.0
				Load Amps	125.0	167.0	250.0	416.0	625.0
				Fuse Size	175.0	250.0	350.0	600.0	1000.0
189	208	1	**D1**	kVA	13.0	17.3	26.0	43.3	64.9
				Load Amps	62.5	83.3	125.0	208.0	312.0
				Fuse Size	90.0	125.0	175.0	300.0	450.0
197	208	1	**C1**	kVA	26.0	34.7	52.0	86.5	130.0
				Load Amps	125.0	167.0	250.0	416.0	625.0
				Fuse Size	175.0	225.0	350.0	600.0	1000.0
208	229	1	**D1**	kVA	14.3	19.1	28.6	47.6	71.4
				Load Amps	62.5	83.3	125.0	208.0	312.0
				Fuse Size	90.0	125.0	175.0	300.0	450.0
218 **	240	1	**D1**	kVA	15.0	20.0	30.0	49.9	74.9
				Load Amps	62.5	83.3	125.0	208.0	312.0
				Fuse Size	90.0	125.0	175.0	300.0	450.0
229	240	1	**C1**	kVA	30.0	40.1	60.0	99.8	150.0
				Load Amps	125.0	167.0	250.0	416.0	625.0
				Fuse Size	175.0	225.0	350.0	600.0	1000.0
BUCKING									
132 **	120	1	**A2**	kVA	16.5	22.0	33.0	54.9	82.5
				Load Amps	137.5	183.3	275.0	457.6	687.5
				Fuse Size	175.0	225.0	350.0	600.0	800.0
144 **	120	1	**B2**	kVA	9.0	12.0	18.0	30.0	44.9
				Load Amps	75.0	100.0	150.0	249.6	374.4
				Fuse Size	80.0	110.0	175.0	300.0	400.0
229	208	1	**D2**	kVA	14.3	19.1	28.6	47.6	71.4
				Load Amps	68.8	91.6	137.5	228.8	343.2
				Fuse Size	80.0	110.0	175.0	300.0	400.0
252 **	240	1	**C2**	kVA	31.5	42.0	63.0	104.8	157.5
				Load Amps	131.3	174.9	262.5	436.8	656.3
				Fuse Size	175.0	225.0	350.0	600.0	800.0
264 **	240	1	**D2**	kVA	16.5	22.0	33.0	54.9	78.6
				Load Amps	68.8	91.6	137.5	228.8	343.2
				Fuse Size	80.0	110.0	175.0	300.0	400.0

* For alternate electrical connection diagrams, refer to the section immediately following the selection tables.
** Shaded items are 60 Hz only (All other ratings shown are 50/60 Hz).

Selection Tables: Single Phase

Table 2: Using Group 2 (120 x 240 V Primary, 16/32 V Secondary) Transformers

Input Voltage	Output Voltage	Quantity Req'd	Connection Diagram *	Application Data	Catalog Number				
					HS20B150	HS20B250	HS20F500B	HS20F750B	HS20F1B
BOOSTING									
95	120	1	**B1**	kVA	0.6	0.9	1.9	2.8	3.8
				Load Amps	4.7	7.8	15.6	23.4	31.2
				Fuse Size	10.0	15.0	25.0	40.0	50.0
106	120	1	**A1**	kVA	1.1	1.9	3.7	5.6	7.5
				Load Amps	9.4	15.6	31.2	46.8	62.5
				Fuse Size	15.0	25.0	45.0	70.0	90.0
183	208	1	**D1**	kVA	1.0	1.6	3.2	4.9	6.5
				Load Amps	4.7	7.8	15.6	23.4	31.2
				Fuse Size	10.0	15.0	25.0	35.0	45.0
195	208	1	**C1**	kVA	2.0	3.2	6.5	9.7	13.0
				Load Amps	9.4	15.6	31.2	46.8	62.5
				Fuse Size	15.0	25.0	45.0	70.0	90.0
208	236	1	**D1**	kVA	1.1	1.8	3.7	5.5	7.4
				Load Amps	4.7	7.8	15.6	23.4	31.2
				Fuse Size	10.0	15.0	25.0	40.0	50.0
225	240	1	**C1**	kVA	2.3	3.7	7.5	11.2	15.0
				Load Amps	9.4	15.6	31.2	46.8	62.5
				Fuse Size	15.0	25.0	45.0	70.0	90.0
240 **	272	1	**D1**	kVA	1.3	2.1	4.2	6.4	8.5
				Load Amps	4.7	7.8	15.6	23.4	31.2
				Fuse Size	10.0	15.0	25.0	35.0	45.0
BUCKING									
136 **	120	1	**A2**	kVA	1.3	2.1	4.2	6.4	8.5
				Load Amps	10.6	17.7	35.4	53.2	70.8
				Fuse Size	15.0	20.0	40.0	60.0	80.0
152 **	120	1	**B2**	kVA	0.7	1.2	2.4	3.6	4.7
				Load Amps	6.0	9.9	19.8	29.6	39.5
				Fuse Size	10.0	15.0	20.0	30.0	40.0
236	208	1	**D2**	kVA	1.1	1.8	3.7	5.5	7.4
				Load Amps	5.3	8.9	17.7	26.5	35.4
				Fuse Size	6.0	15.0	20.0	30.0	40.0
256 **	240	1	**C2**	kVA	2.4	4.0	8.0	12.0	16.0
				Load Amps	10.0	16.6	33.3	50.0	66.7
				Fuse Size	15.0	20.0	40.0	60.0	80.0
272 **	240	1	**D2**	kVA	1.3	2.1	4.2	6.4	8.5
				Load Amps	5.3	8.8	17.7	26.5	35.4
				Fuse Size	10.0	15.0	20.0	30.0	40.0

* For alternate electrical connection diagrams, refer to the section immediately following the selection tables.
** Shaded items are 60 Hz only (All other ratings shown are 50/60 Hz).

Selection Tables: Single Phase

Table 2: Using Group 2 (120 x 240 V Primary, 16/32 V Secondary) Transformers

Input Voltage	Output Voltage	Quantity Req'd	Connection Diagram *	Application Data	Catalog Number				
					HS20F1.5A	HS20F2A	HS20F3A	HS20F5A	HS20F7.5A
BOOSTING									
95	120	1	**B1**	kVA	5.6	7.5	11.2	18.7	28.0
				Load Amps	46.8	62.5	93.7	156.0	234.0
				Fuse Size	80.0	100.0	150.0	250.0	400.0
106	120	1	**A1**	kVA	11.2	15.0	22.5	37.4	56.2
				Load Amps	93.7	125.0	187.5	312.0	468.0
				Fuse Size	150.0	200.0	300.0	450.0	700.0
183	208	1	**D1**	kVA	9.7	13.0	19.5	32.4	48.6
				Load Amps	46.8	62.5	93.7	156.0	234.0
				Fuse Size	70.0	90.0	150.0	225.0	350.0
195	208	1	**C1**	kVA	19.5	26.0	39.0	64.9	97.3
				Load Amps	93.7	125.0	187.5	312.0	468.0
				Fuse Size	125.0	175.0	250.0	450.0	700.0
208	236	1	**D1**	kVA	11.0	14.7	22.0	36.8	55.2
				Load Amps	46.8	62.5	93.7	156.0	234.0
				Fuse Size	70.0	90.0	150.0	225.0	350.0
225	240	1	**C1**	kVA	22.5	30.0	45.0	74.8	112.3
				Load Amps	93.7	125.0	187.5	312.0	468.0
				Fuse Size	125.0	175.0	250.0	450.0	700.0
240 **	272	1	**D1**	kVA	12.7	17.0	25.5	42.4	63.6
				Load Amps	46.8	62.5	93.7	156.0	234.0
				Fuse Size	70.0	90.0	150.0	225.0	350.0
BUCKING									
136 **	120	1	**A2**	kVA	12.7	17.0	25.5	42.4	63.6
				Load Amps	106.2	141.7	212.5	353.6	530.4
				Fuse Size	125.0	175.0	250.0	400.0	600.0
152 **	120	1	**B2**	kVA	7.1	9.5	14.3	23.7	35.6
				Load Amps	59.4	79.2	118.8	197.6	296.4
				Fuse Size	60.0	80.0	125.0	200.0	300.0
236	208	1	**D2**	kVA	11.1	14.8	22.1	36.8	55.2
				Load Amps	53.2	70.9	106.4	177.0	265.5
				Fuse Size	60.0	80.0	125.0	200.0	300.0
256 **	240	1	**C2**	kVA	24.0	32.0	48.0	79.9	119.8
				Load Amps	99.9	133.3	200.0	332.8	499.2
				Fuse Size	125.0	175.0	250.0	400.0	600.0
272 **	240	1	**D2**	kVA	12.8	17.0	25.5	42.4	63.6
				Load Amps	53.2	70.8	106.3	176.8	265.2
				Fuse Size	60.0	80.0	125.0	200.0	300.0

* For alternate electrical connection diagrams, refer to the section immediately following the selection tables.
** Shaded items are 60 Hz only (All other ratings shown are 50/60 Hz).

Selection Tables: Single Phase

Table 3: Using Group 3 (240 x 480 V Primary, 24/48 V Secondary) Transformers

Input Voltage	Output Voltage	Quantity Req'd	Connection Diagram *	Application Data	Catalog Number				
					HS22B150	HS22B250	HS22F500B	HS22F750B	HS22F1B
BOOSTING									
200	240	1	**B1**	kVA	0.75	1.25	2.50	3.74	4.99
				Load Amps	3.10	5.20	10.40	15.60	20.80
				Fuse Size	6.00	10.00	15.00	20.00	30.00
230 **	277	1	**B1**	kVA	0.87	1.44	2.88	4.22	5.76
				Load Amps	3.10	5.20	10.40	15.60	20.80
				Fuse Size	10.00	15.00	20.00	25.00	35.00
346	380	1	**D1**	kVA	1.20	1.98	3.95	5.93	7.90
				Load Amps	3.10	5.20	10.40	15.60	20.80
				Fuse Size	6.00	10.00	15.00	20.00	30.00
362	380	1	**C1**	kVA	2.40	3.95	7.90	11.86	15.81
				Load Amps	6.30	10.40	20.80	31.20	41.60
				Fuse Size	10.00	15.00	30.00	40.00	60.00
378	416	1	**D1**	kVA	1.30	2.16	4.33	6.49	8.65
				Load Amps	3.10	5.20	10.40	15.60	20.80
				Fuse Size	6.00	10.00	15.00	25.00	30.00
436	480	1	**D1**	kVA	1.50	2.50	4.99	7.49	9.98
				Load Amps	3.10	5.20	10.40	15.60	20.80
				Fuse Size	6.00	10.00	15.00	25.00	30.00
458 **	480	1	**C1**	kVA	3.00	4.99	9.98	14.98	19.97
				Load Amps	6.30	10.40	20.80	31.20	41.60
				Fuse Size	15.00	15.00	30.00	45.00	60.00
BUCKING									
277 **	230	1	**B2**	kVA	0.86	1.44	2.88	4.33	5.76
				Load Amps	3.80	6.26	12.53	18.79	25.05
				Fuse Size	6.00	10.00	15.00	20.00	30.00
398	380	1	**C2**	kVA	2.50	4.14	8.28	12.40	16.60
				Load Amps	6.50	10.89	21.79	32.70	43.60
				Fuse Size	10.00	15.00	30.00	40.00	60.00
418 **	380	1	**D2**	kVA	1.30	2.18	4.35	6.52	8.69
				Load Amps	3.40	5.72	11.40	17.20	22.90
				Fuse Size	6.00	10.00	15.00	20.00	30.00
504 **	480	1	**C2**	kVA	3.10	5.24	10.50	15.70	21.00
				Load Amps	6.60	10.40	21.80	32.80	43.70
				Fuse Size	15.00	15.00	30.00	45.00	60.00
528 **	480	1	**D2**	kVA	1.65	2.75	5.49	8.24	11.00
				Load Amps	3.40	5.72	11.44	17.16	22.88
				Fuse Size	6.00	10.00	15.00	20.00	30.00

* For alternate electrical connection diagrams, refer to the section immediately following the selection tables.
** Shaded items are 60 Hz only (All other ratings shown are 50/60 Hz).

Selection Tables: Single Phase

Table 3: Using Group 3 (240 x 480 V Primary, 24/48 V Secondary) Transformers

Input Voltage	Output Voltage	Quantity Req'd	Connection Diagram *	Application Data	Catalog Number				
					HS22F1.5A	HS22F2A	HS22F3A	HS22F5A	HS22F7.5A
BOOSTING									
200	240	1	**B1**	kVA	7.49	9.98	15.0	24.96	37.44
				Load Amps	31.2	41.6	62.5	104.0	156.0
				Fuse Size	50.0	70.0	90.0	150.0	225.0
230 **	277	1	**B1**	kVA	8.64	11.52	17.31	28.81	43.21
				Load Amps	31.2	41.6	62.5	104.0	156.0
				Fuse Size	50.0	70.0	100.0	175.0	250.0
346	380	1	**D1**	kVA	11.86	15.81	23.75	39.52	59.28
				Load Amps	31.2	41.6	62.5	104.0	156.0
				Fuse Size	45.0	60.0	90.0	150.0	225.0
362	380	1	**C1**	kVA	23.75	31.65	47.5	79.04	118.56
				Load Amps	62.5	83.3	125	208	312.0
				Fuse Size	90.0	110.0	175.0	300.0	450.0
378	416	1	**D1**	kVA	12.98	17.31	26.0	43.26	64.9
				Load Amps	31.2	41.6	62.5	104.0	156.0
				Fuse Size	50.0	60.0	90.0	150.0	225.0
436	480	1	**D1**	kVA	14.98	19.97	30.0	49.92	74.88
				Load Amps	31.2	41.6	62.5	104.0	156.0
				Fuse Size	45.0	60.0	90.0	150.0	225.0
458 **	480	1	**C1**	kVA	30.0	39.98	60.0	99.84	149.76
				Load Amps	62.5	83.3	125.0	208.0	312.0
				Fuse Size	90.0	110.0	175.0	300.0	450.0
BUCKING									
277 **	230	1	**B2**	kVA	8.64	11.5	17.3	28.8	43.2
				Load Amps	37.6	50.1	75.3	125.3	187.9
				Fuse Size	40.0	60.0	80.0	150.0	200.0
398	380	1	**C2**	kVA	24.8	33.1	49.8	82.8	124.2
				Load Amps	65.4	87.1	130.9	217.9	326.8
				Fuse Size	80.0	110.0	175.0	300.0	400.0
418 *	380	1	**D2**	kVA	13.0	17.4	26.1	43.5	65.2
				Load Amps	34.3	45.8	68.8	114.4	171.6
				Fuse Size	40.0	60.0	80.0	150.0	200.0
504 **	480	1	**C2**	kVA	31.4	41.9	63.0	104.8	157.2
				Load Amps	65.5	87.4	131.3	218.4	327.6
				Fuse Size	90.0	110.0	175.0	300.0	450.0
528 **	480	1	**D2**	kVA	16.5	22.0	33.0	54.9	82.4
				Load Amps	34.3	45.8	68.8	114.4	171.6
				Fuse Size	40.0	60.0	80.0	150.0	200.0

* For alternate electrical connection diagrams, refer to the section immediately following the selection tables.
** Shaded items are 60 Hz only (All other ratings shown are 50/60 Hz).

Selection Tables: Three Phase

Table 4: Using Group 1 (120 x 240 V Primary, 12/24 V Secondary) Transformers

Input Voltage	Output Voltage	Quantity Req'd	Connection Diagram *	Application Data	Catalog Number						
					HS19B50	HS19B100	HS19B150	HS19B250	HS19F500B	HS19F750B	HS19F1B
BOOSTING											
188	208	2	**F1**	kVA	0.749	1.5	2.25	3.75	7.51	11.3	15.0
				Load Amps	2.08	4.16	6.25	10.4	20.8	31.25	41.6
				Fuse Size	6.0	10.0	15.0	15.0	30.0	45.0	60.0
198	208	2	**E1**	kVA	1.5	3.0	4.5	7.51	15.0	22.5	30.0
				Load Amps	4.16	8.32	12.5	20.8	41.6	62.5	83.3
				Fuse Size	6.0	15.0	25.0	30.0	60.0	90.0	110.0
208	229	2	**F1**	kVA	0.825	1.65	2.48	4.13	8.26	12.4	16.5
				Load Amps	2.08	4.16	6.25	10.4	20.8	31.25	41.6
				Fuse Size	6.0	10.0	15.0	15.0	30.0	45.0	60.0
208	229	3	**J1**	kVA	1.65	3.3	4.96	8.26	16.5	24.8	33.1
				Load Amps	4.16	8.32	12.5	20.8	41.6	62.5	83.3
				Fuse Size	10.0	15.0	20.0	30.0	60.0	90.0	125.0
228 **	240	2	**E1**	kVA	1.73	3.46	5.2	8.68	17.3	26	34.6
				Load Amps	4.16	8.32	12.5	20.8	41.6	62.5	83.3
				Fuse Size	6.0	15.0	20.0	30.0	60.0	90.0	110.0
416	436	3	**L1**	kVA	3.15	6.29	9.44	15.8	31.5	47.2	62.9
				Load Amps	4.16	8.32	12.5	20.8	41.6	62.5	83.3
				Fuse Size	6.0	15.0	20.0	30.0	60.0	90.0	110.0
416	458	3	**M1**	kVA	1.65	3.31	4.96	8.27	16.5	24.8	33
				Load Amps	2.08	4.16	6.25	10.4	20.8	31.25	41.6
				Fuse Size	3.0	6.0	10.0	15.0	30.0	45.0	60.0
BUCKING											
218	208	2	**E2**	kVA	1.57	3.14	4.73	7.85	15.7	23.6	31.4
				Load Amps	4.36	8.72	13.1	21.8	43.6	65.5	87.2
				Fuse Size	10.0	15.0	20.0	30.0	60.0	80.0	110.0
229	208	2	**F2**	kVA	0.824	1.65	2.48	4.12	8.25	12.4	16.5
				Load Amps	2.29	4.58	6.88	11.4	22.9	34.4	45.8
				Fuse Size	6.0	10.0	15.0	15.0	30.0	40.0	60.0
252 **	240	2	**E2**	kVA	1.82	3.63	5.46	9.08	18.2	27.3	36.3
				Load Amps	4.37	8.74	13.1	21.8	43.7	65.6	87.4
				Fuse Size	6.00	10.00	15.00	30.00	60.00	80.00	110.00
264 **	240	2	**F2**	kVA	0.951	1.9	2.86	4.76	9.51	14.3	19.00
				Load Amps	2.29	4.58	6.88	11.44	22.9	34.4	45.8
				Fuse Size	6.0	6.0	10.0	15.0	30.0	40.0	60.0
418	378	3	**M2**	kVA	1.5	3.0	4.5	7.49	15.0	22.5	30.0
				Load Amps	2.29	4.58	6.88	11.44	22.9	34.4	45.8
				Fuse Size	6.0	6.0	10.0	15.0	30.0	40.0	60.0

* For alternate electrical connection diagrams, refer to the section immediately following the selection tables.
** Shaded items are 60 Hz only (All other ratings shown are 50/60 Hz).

Selection Tables: Three Phase

Table 4: Using Group 1 (120 x 240 V Primary, 12/24 V Secondary) Transformers

Input Voltage	Output Voltage	Quantity Req'd	Connection Diagram *	Application Data	Catalog Number				
					HS19F1.5A	HS19F2A	HS19F3A	HS19F5A	HS19F7.5A
BOOSTING									
188	208	2	**F1**	kVA	22.5	30.0	45.0	75.1	112.5
				Load Amps	62.5	83.3	125.0	208.3	312.5
				Fuse Size	90.0	125.0	175.0	300.0	450.0
198	208	2	**E1**	kVA	45.0	60.0	90.1	150.1	225.2
				Load Amps	125.0	166.6	250.0	416.6	625.0
				Fuse Size	175.0	225.0	350.0	600.0	1000.0
208	229	2	**F1**	kVA	24.8	33.1	49.6	82.6	123.9
				Load Amps	62.5	83.3	125.0	208.3	312.5
				Fuse Size	90.0	125.0	175.0	300.0	450.0
208	229	3	**J1**	kVA	49.6	66.1	99.2	165.3	247.9
				Load Amps	125.0	166.6	250.0	416.6	625.0
				Fuse Size	175.0	250.0	350.0	600.0	1000.0
228 **	240	2	**E1**	kVA	52.0	69.3	103.9	173.2	259.8
				Load Amps	125.0	166.6	250.0	416.6	625.0
				Fuse Size	175.0	250.0	350.0	600.0	1000.0
416	436	3	**L1**	kVA	94.4	125.8	188.79	314.6	472.0
				Load Amps	125.0	166.6	250.0	416.6	625.0
				Fuse Size	175.0	250.0	350.0	600.0	1000.0
416	458	3	**M1**	kVA	49.6	66.1	99.2	165.3	247.9
				Load Amps	62.5	83.3	125.0	208.3	312.5
				Fuse Size	90.0	125.0	175.0	300.0	450.0
BUCKING									
218	208	2	**E2**	kVA	47.2	62.7	94.4	157.3	236.0
				Load Amps	131.0	174.0	262.0	436.6	655.0
				Fuse Size	175.0	225.0	350.0	600.0	800.0
229	208	2	**F2**	kVA	24.8	33.0	49.6	82.5	123.9
				Load Amps	68.8	91.6	137.6	229.0	344.1
				Fuse Size	80.0	110.0	175.0	300.0	400.0
252 **	240	2	**E2**	kVA	54.6	72.5	109.1	181.8	272.8
				Load Amps	131.3	174.3	262.5	437.4	656.3
				Fuse Size	175.0	225.0	350.0	600.0	800.0
264 **	240	2	**F2**	kVA	28.6	38.0	57.2	95.1	142.9
				Load Amps	68.8	91.5	137.5	228.8	343.8
				Fuse Size	80.0	110.0	175.0	300.0	400.0
418	378	3	**M2**	kVA	45.0	59.9	90.1	149.9	225.2
				Load Amps	68.8	91.6	137.6	228.9	343.9
				Fuse Size	80.0	110.0	175.0	300.0	400.0

* For alternate electrical connection diagrams, refer to the section immediately following the selection tables.
** Shaded items are 60 Hz only (All other ratings shown are 50/60 Hz).

Selection Tables: Three Phase

Table 5: Using Group 2 (120 x 240 V Primary, 16/32 V Secondary) Transformers

Input Voltage	Output Voltage	Quantity Req'd	Connection Diagram *	Application Data	Catalog Number				
					HS20B150	HS20B250	HS20F500B	HS20F750B	HS20F1B
BOOSTING									
184	208	2	**F1**	kVA	1.69	2.81	5.63	8.44	11.3
				Load Amps	4.69	7.8	15.6	23.4	31.2
				Fuse Size	10.0	15.0	25.0	35.0	45.0
195	208	2	**E1**	kVA	3.38	5.63	11.3	16.9	22.5
				Load Amps	9.38	15.6	31.2	46.9	62.5
				Fuse Size	15.0	25.0	45.0	70.0	90.0
208	236	2	**F1**	kVA	1.92	3.19	6.39	9.58	12.8
				Load Amps	4.69	7.8	15.6	23.4	31.2
				Fuse Size	10.0	15.0	25.0	35.0	45.0
208	236	3	**J1**	kVA	3.83	6.38	12.8	19.2	25.6
				Load Amps	9.38	15.6	31.2	46.9	62.5
				Fuse Size	15.0	25.0	45.0	70.0	90.0
225	240	2	**E1**	kVA	3.9	6.5	13.0	19.5	26.0
				Load Amps	9.38	15.6	31.2	46.9	62.5
				Fuse Size	15.0	25.0	45.0	70.0	90.0
416	443	3	**L1**	kVA	7.2	12.0	24.0	36.0	48.0
				Load Amps	9.38	15.6	31.2	46.9	62.5
				Fuse Size	15.0	25.0	45.0	70.0	90.0
416	471	3	**M1**	kVA	3.83	6.37	12.8	19.1	25.5
				Load Amps	4.69	7.8	15.6	23.4	31.2
				Fuse Size	10.0	15.0	25.0	35.0	45.0
BUCKING									
222	208	2	**E2**	kVA	3.61	6.0	12.0	18.0	24.0
				Load Amps	10.0	16.6	33.3	50.1	66.7
				Fuse Size	15.0	20.0	40.0	60.0	80.0
236	208	2	**F2**	kVA	1.92	3.19	6.38	9.56	12.8
				Load Amps	5.32	8.85	17.7	26.5	35.4
				Fuse Size	10.0	10.0	20.0	30.0	40.0
256 **	240	2	**E2**	kVA	4.16	6.92	13.8	20.8	27.7
				Load Amps	10.1	16.6	33.3	50.0	66.7
				Fuse Size	15.0	20.0	40.0	60.0	80.0
272 **	240	2	**F2**	kVA	2.21	3.67	7.35	11.0	14.7
				Load Amps	5.32	8.84	17.7	26.5	35.4
				Fuse Size	10.0	15.0	20.0	30.0	40.0
432	380	3	**M2**	kVA	3.51	5.84	11.7	17.5	23.3
				Load Amps	5.33	8.87	17.7	26.6	35.5
				Fuse Size	10.0	10.0	20.0	30.0	40.0

* For alternate electrical connection diagrams, refer to the section immediately following the selection tables.
** Shaded items are 60 Hz only (All other ratings shown are 50/60 Hz).

Selection Tables: Three Phase

Table 5: Using Group 2 (120 x 240 V Primary, 16/32 V Secondary) Transformers

Input Voltage	Output Voltage	Quantity Req'd	Connection Diagram *	Application Data	Catalog Number				
					HS20F1.5A	HS20F2A	HS20F3A	HS20F5A	HS20F7.5A
BOOSTING									
184	208	2	**F1**	kVA	16.9	22.5	33.8	56.3	84.4
				Load Amps	46.9	62.5	93.8	156.0	234.0
				Fuse Size	60.0	90.0	150.0	225.0	350.0
195	208	2	**E1**	kVA	33.8	45.0	67.6	112.6	168.9
				Load Amps	93.7	125.0	187.5	312.0	468.0
				Fuse Size	125.0	175.0	250.0	450.0	700.0
208	236	2	**F1**	kVA	19.2	25.6	38.2	63.9	95.8
				Load Amps	46.9	62.5	93.7	156.0	234.0
				Fuse Size	70.0	90.0	150.0	225.0	350.0
208	236	3	**J1**	kVA	38.2	51.1	76.6	127.7	191.6
				Load Amps	93.7	125.0	187.5	312.0	468.0
				Fuse Size	150.0	200.0	300.0	450.0	700.0
225	240	2	**E1**	kVA	71.9	52.0	77.9	129.9	194.0
				Load Amps	93.7	125.0	187.5	312.0	468.0
				Fuse Size	125.0	175.0	250.0	450.0	700.0
416	443	3	**L1**	kVA	71.9	95.9	143.9	239.8	359.7
				Load Amps	93.7	125	187.5	312.0	468.0
				Fuse Size	125.0	175.0	250.0	450.0	700.0
416	471	3	**M1**	kVA	38.2	51.0	76.5	127.5	191.2
				Load Amps	46.9	62.5	93.8	156.0	234.0
				Fuse Size	70.0	90.0	150.0	225.0	350.0
BUCKING									
222	208	2	**E2**	kVA	36.0	48.1	72.1	120.0	179.9
				Load Amps	100.0	133.4	200.1	333.0	499.5
				Fuse Size	125.0	175.0	250.0	400.0	600.0
236	208	2	**F2**	kVA	19.2	25.5	38.8	63.8	95.6
				Load Amps	53.2	70.9	106.4	177.0	265.5
				Fuse Size	60.0	80.0	125.0	200.0	300.0
256 **	240	2	**E2**	kVA	41.5	55.4	83.1	138.3	207.5
				Load Amps	99.9	133.3	200.0	332.8	499.2
				Fuse Size	125.0	175.0	250.0	400.0	600.0
272 **	240	2	**F2**	kVA	22.1	29.4	44.2	73.5	110.2
				Load Amps	53.2	70.8	106.3	176.8	265.2
				Fuse Size	60.0	80.0	125.0	200.0	300.0
432	380	3	**M2**	kVA	35.1	46.8	70.2	116.7	175.1
				Load Amps	53.3	71.1	106.6	177.3	266.0
				Fuse Size	60.0	80.0	125.0	200.0	300.0

* For alternate electrical connection diagrams, refer to the section immediately following the selection tables.
** Shaded items are 60 Hz only (All other ratings shown are 50/60 Hz).

Selection Tables: Three Phase

Table 6: Using Group 3 (240 x 480 V Primary, 24/48 V Secondary) Transformers

Input Voltage	Output Voltage	Quantity Req'd	Connection Diagram *	Application Data	Catalog Number				
					HS22B150	HS22B250	HS22F500B	HS22F750B	HS22F1B
BOOSTING									
173	208	2	G1	kVA	1.12	1.88	3.75	5.63	7.5
				Load Amps	3.12	5.2	10.4	15.6	20.8
				Fuse Size	6.0	10.0	20.0	25.0	35.0
200	240	2	G1	kVA	1.3	2.16	4.33	6.5	8.66
				Load Amps	3.12	5.2	10.4	15.6	20.8
				Fuse Size	6.0	10.0	20.0	25.0	35.0
362	380	2	E1	kVA	3.91	6.52	13	19.6	26.1
				Load Amps	6.24	10.4	20.8	31.2	41.6
				Fuse Size	10.0	15.0	30.0	45.0	60.0
346	416	3	K1	kVA	2.25	3.75	7.5	11.3	15.0
				Load Amps	3.12	5.2	10.4	15.6	20.8
				Fuse Size	6.0	10.0	20.0	25.0	35.0
400	480	3	K1	kVA	2.59	4.33	8.65	13.0	17.3
				Load Amps	3.12	5.2	10.4	15.6	20.8
				Fuse Size	10.0	15.0	20.0	25.0	35.0
436	480	2	F1	kVA	2.59	4.33	8.65	13	17.3
				Load Amps	3.12	5.2	10.4	15.6	20.8
				Fuse Size	6.0	10.0	15.0	25.0	30.0
468	492	2	E1	kVA	5.2	8.66	17.3	26.0	34.6
				Load Amps	6.24	10.4	20.8	31.2	41.6
				Fuse Size	15.0	15.0	30.0	45.0	60.0
BUCKING									
250	208	2	G2	kVA	1.35	2.25	4.5	6.75	9.01
				Load Amps	3.75	6.25	12.5	18.7	25.0
				Fuse Size	6.0	10.0	15.0	20.0	30.0
457	380	3	K2	kVA	2.47	4.12	8.23	12.3	16.5
				Load Amps	3.75	6.25	12.5	18.8	25.0
				Fuse Size	6.0	10.0	15.0	20.0	30.0
499	416	3	K2	kVA	2.7	4.49	8.99	13.5	18.0
				Load Amps	3.74	6.24	12.5	18.7	24.9
				Fuse Size	6.0	10.0	15.0	20.0	30.0
504 **	480	2	E2	kVA	5.45	9.08	18.2	27.2	36.3
				Load Amps	6.56	10.9	21.8	32.8	43.7
				Fuse Size	15.0	15.0	30.0	40.0	60.0
528 **	480	2	F2	kVA	2.85	4.76	9.51	14.3	19.0
				Load Amps	3.43	5.72	11.4	17.2	22.9
				Fuse Size	6.0	10.0	15.0	20.0	30.0

* For alternate electrical connection diagrams, refer to the section immediately following the selection tables.
** Shaded items are 60 Hz only (All other ratings shown are 50/60 Hz).

Selection Tables: Three Phase

Table 6: Using Group 3 (240 x 480 V Primary, 24/48 V Secondary) Transformers

Input Voltage	Output Voltage	Quantity Req'd	Connection Diagram *	Application Data	Catalog Number				
					HS22F1.5A	HS22F2A	HS22F3A	HS22F5A	HS22F7.5A
BOOSTING									
173	208	2	G1	kVA	11.3	15	22.5	37.5	56.3
				Load Amps	31.2	41.6	62.5	104.0	156.0
				Fuse Size	50.0	70.0	100.0	175.0	250.0
200	240	2	G1	kVA	13.0	17.3	26.0	43.3	65.0
				Load Amps	31.2	41.6	62.5	104.0	156.0
				Fuse Size	50.0	70.0	100.0	175.0	250.0
362	380	2	E1	kVA	39.1	52.2	78.4	130.4	195.6
				Load Amps	62.4	83.2	125	208.0	312.0
				Fuse Size	90.0	125.0	175.0	300.0	450.0
346	416	3	K1	kVA	22.5	30.0	45.0	75.1	112.6
				Load Amps	31.2	41.6	62.5	104.0	156.0
				Fuse Size	50.0	70.0	100.0	175.0	250.0
400	480	3	K1	kVA	26.0	34.6	52.0	86.6	129.9
				Load Amps	31.2	41.6	62.5	104.0	156.0
				Fuse Size	50.0	70.0	100.0	175.0	250.0
436	480	2	F1	kVA	26.0	34.6	52.0	86.6	129.9
				Load Amps	31.2	41.6	62.5	104.0	156.0
				Fuse Size	45.0	60.0	90.0	150.0	225.0
468	492	2	E1	kVA	52.0	69.3	103.9	173.2	259.8
				Load Amps	62.4	83.2	125.0	208.0	312.0
				Fuse Size	90.0	110.0	175.0	300.0	450.0
BUCKING									
250	208	2	G2	kVA	13.5	18.0	27.1	45.0	67.5
				Load Amps	37.5	50.0	75.1	125.0	187.5
				Fuse Size	40.0	60.0	80.0	150.0	200.0
457	380	3	K2	kVA	24.7	32.9	49.5	82.3	123.5
				Load Amps	37.5	50.0	75.2	125.1	187.6
				Fuse Size	40.0	60.0	80.0	150.0	200.0
499	416	3	K2	kVA	27.0	36.0	54.0	89.9	134.8
				Load Amps	37.4	49.9	75.0	124.7	187.1
				Fuse Size	40.0	60.0	80.0	150.0	200.0
504 **	480	2	E2	kVA	54.5	72.6	109.1	181.6	272.4
				Load Amps	65.5	87.4	131.3	218.4	327.6
				Fuse Size	80.0	110.0	175.0	300.0	400.0
528 **	480	2	F2	kVA	28.5	38.0	57.2	95.1	142.7
				Load Amps	34.3	45.8	68.8	114.4	171.6
				Fuse Size	40.0	60.0	80.0	150.0	200.0

* For alternate electrical connection diagrams, refer to the section immediately following the selection tables.
** Shaded items are 60 Hz only (All other ratings shown are 50/60 Hz).

Alternate Electrical Connections for Buck-Boost Applications

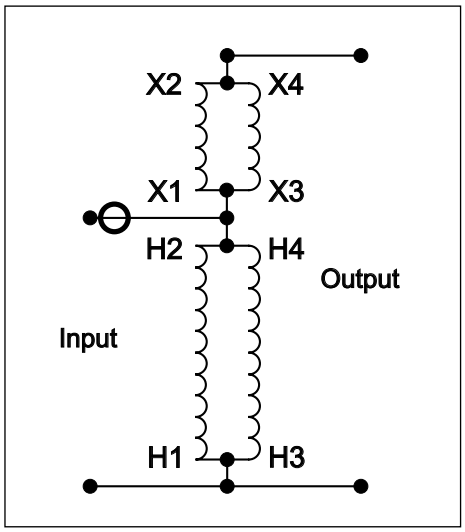

Diagram A1 – Boosting

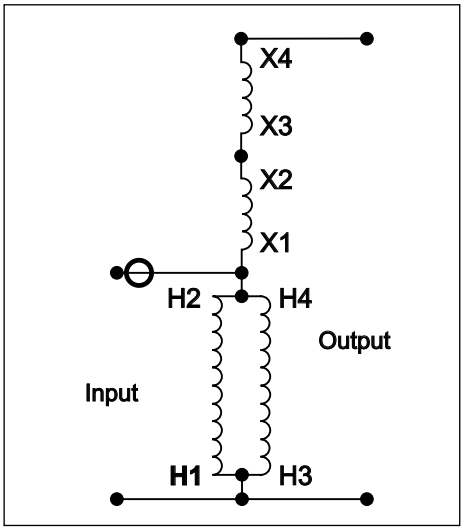

Diagram B1 – Boosting

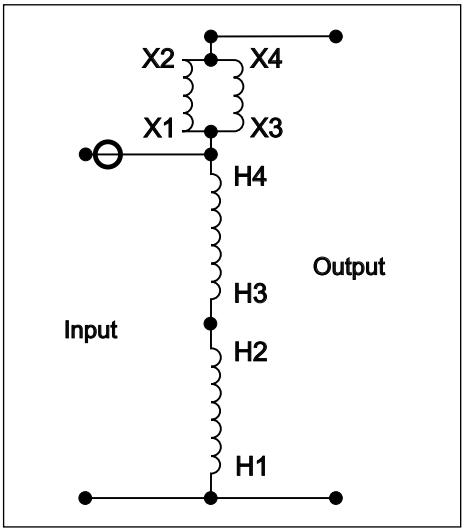

Diagram C1 – Boosting

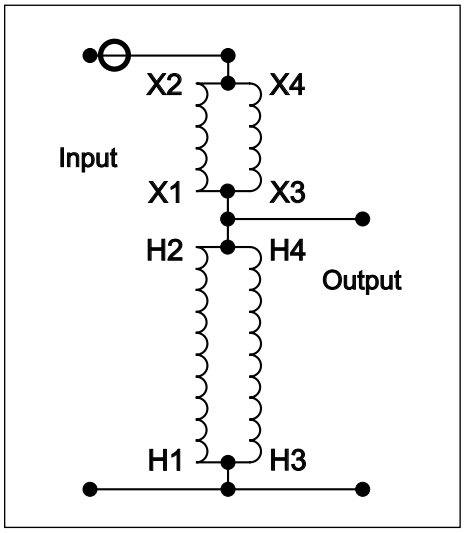

Diagram A2 – Bucking

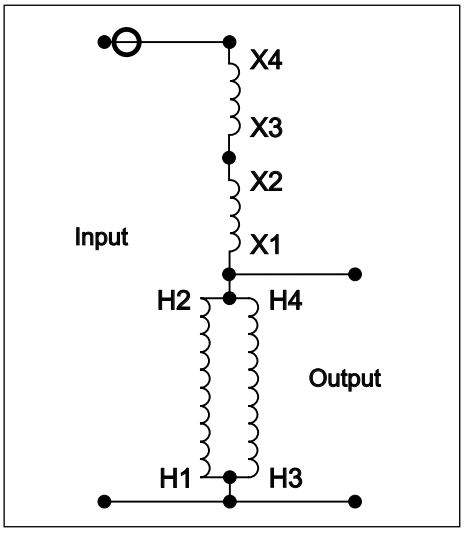

Diagram B2 – Bucking

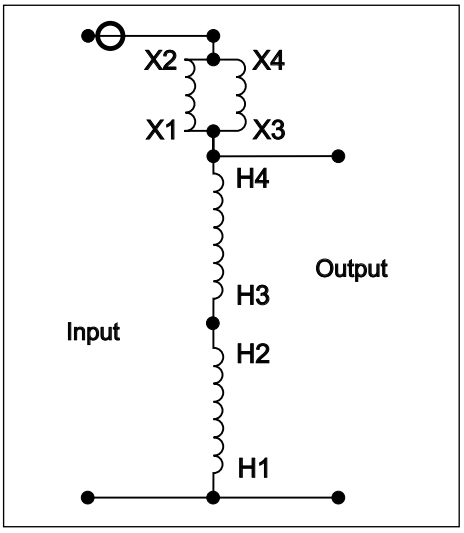

Diagram C2 – Bucking

The o symbol shown on these connection diagrams indicates where fuses or breakers should be field installed for line to neutral applications. For line to line applications, fuses or breakers should be installed on both lines.

Application Note: On all auto-wye connections, the source neutral must be present and connected to the transformer bank. If source neutral is not present, do not use an auto-wye connection.

Alternate Electrical Connections for Buck-Boost Applications

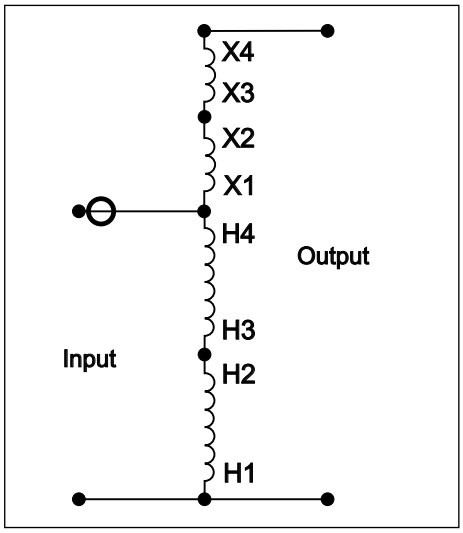

Diagram D1 – Boosting

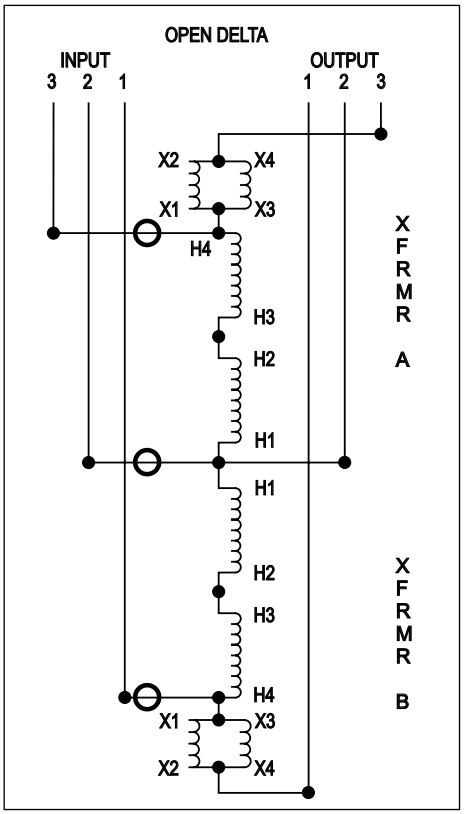

Diagram E1 – Boosting

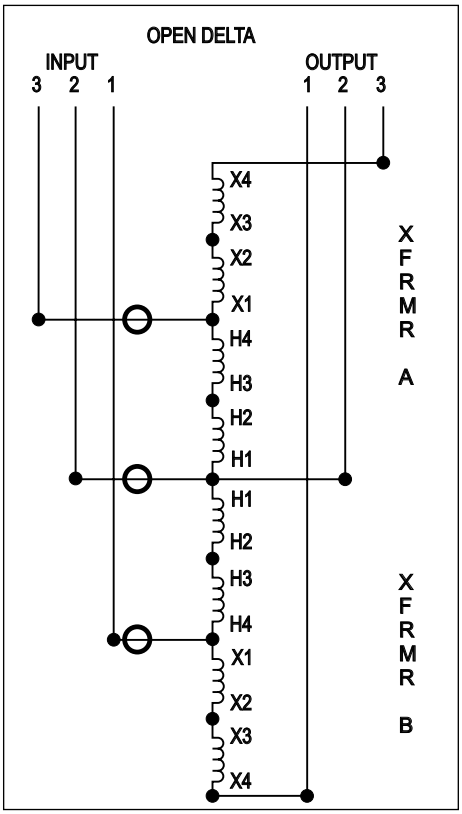

Diagram F1 – Boosting

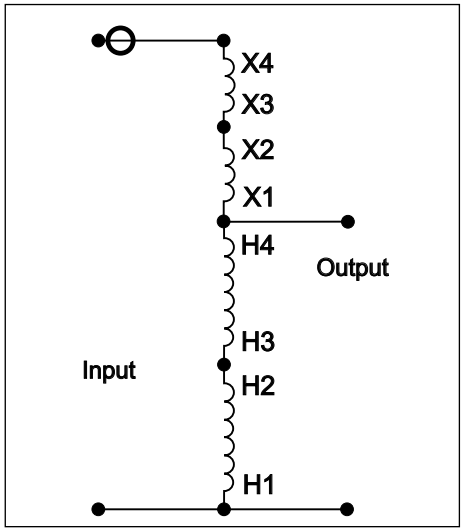

Diagram D2 – Bucking

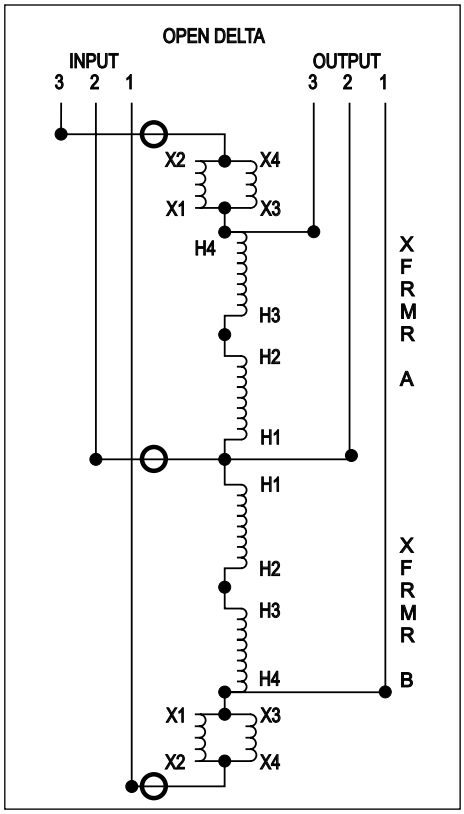

Diagram E2 – Bucking

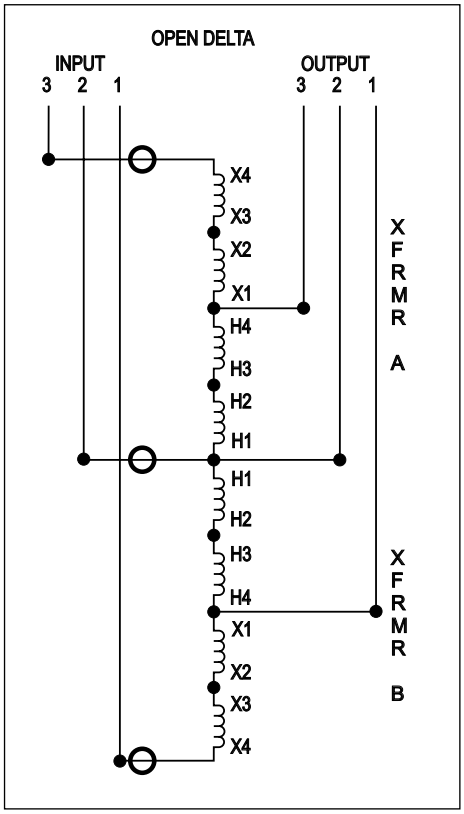

Diagram F2 – Bucking

Alternate Electrical Connections for Buck-Boost Applications

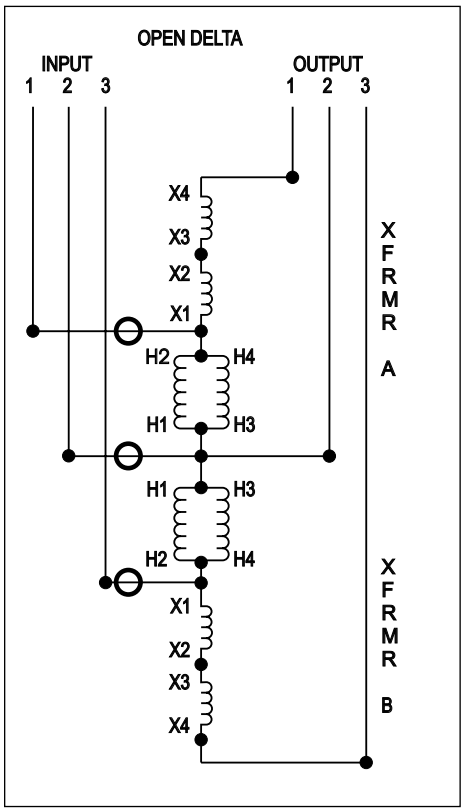

Diagram G1 – Boosting

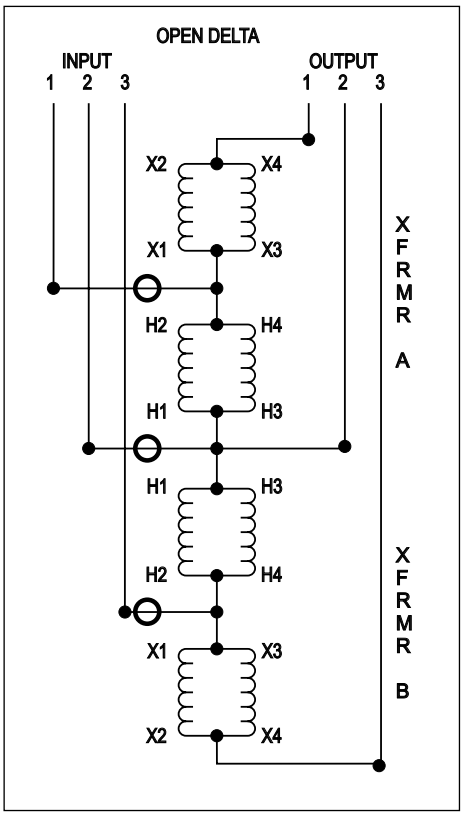

Diagram H1 – Boosting

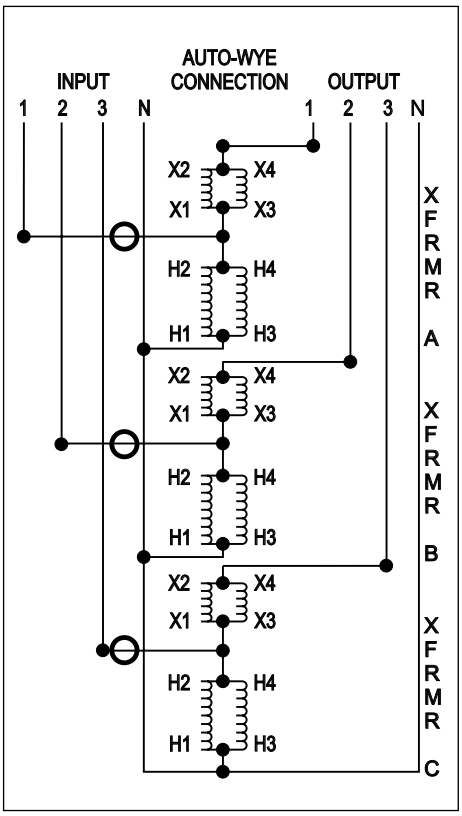

Diagram J1 – Boosting

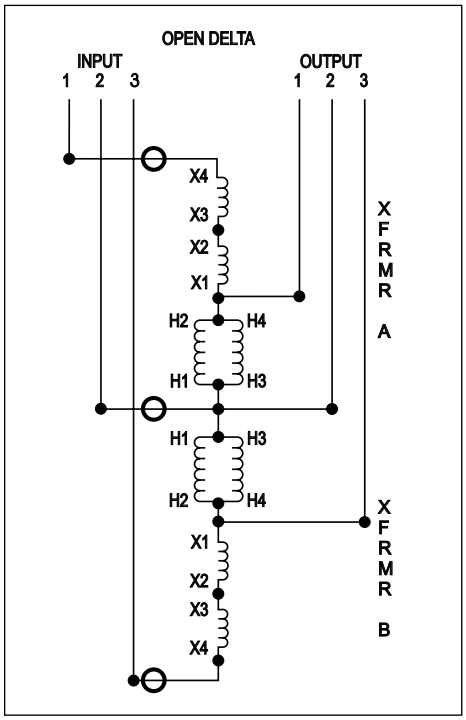

Diagram G2 – Bucking

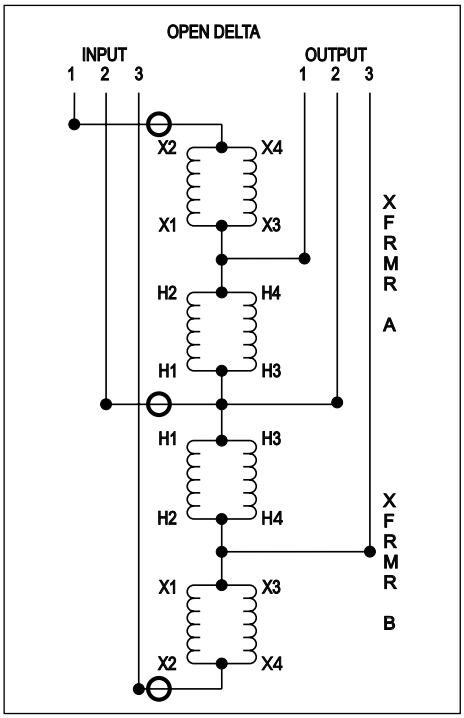

Diagram H2 – Bucking

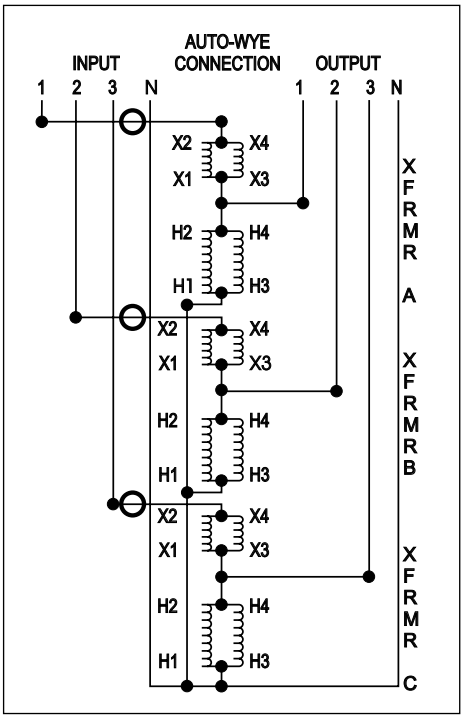

Diagram J2 – Bucking

Alternate Electrical Connections for Buck-Boost Applications

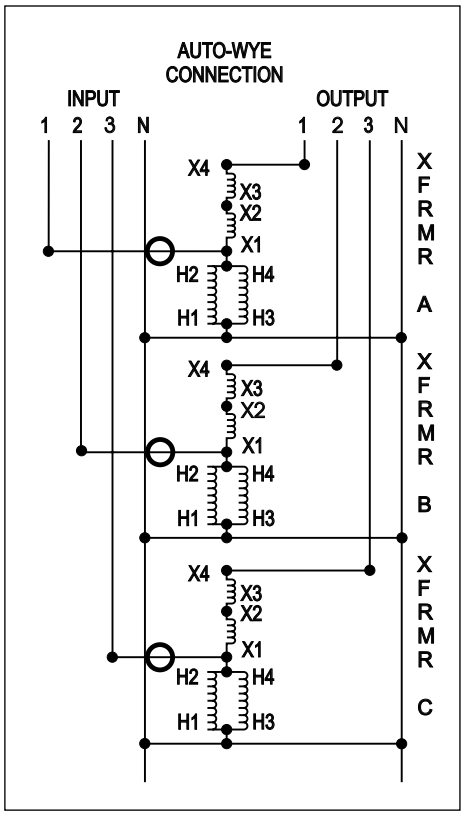

Diagram K1 – Boosting

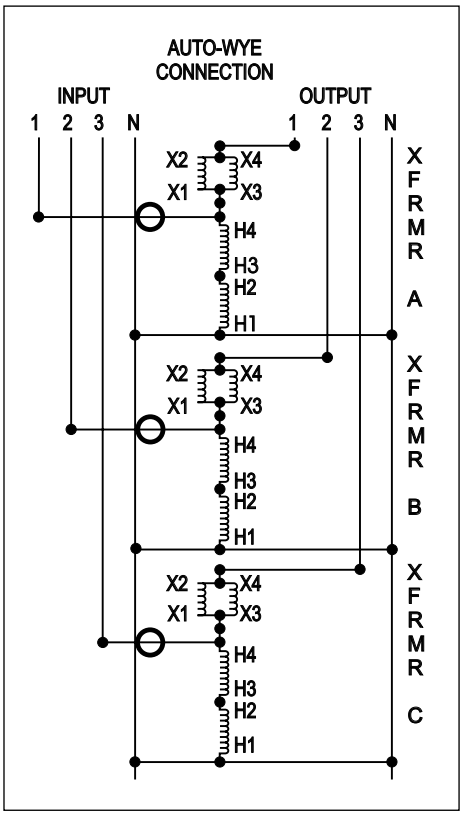

Diagram L1 – Boosting

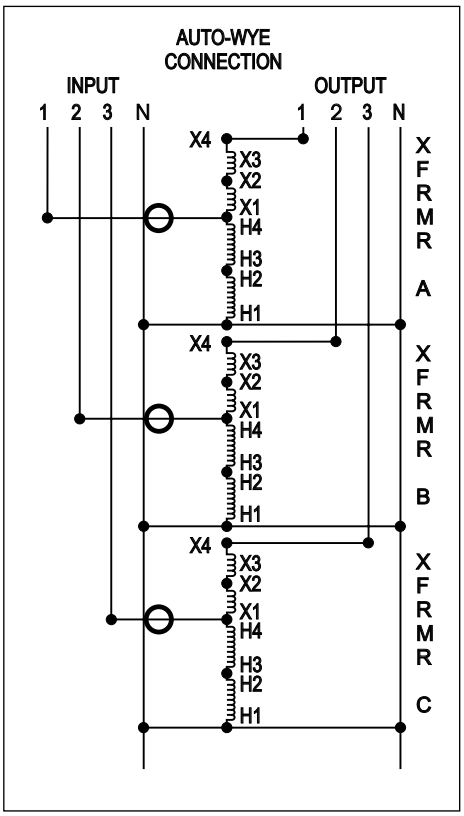

Diagram M1 – Boosting

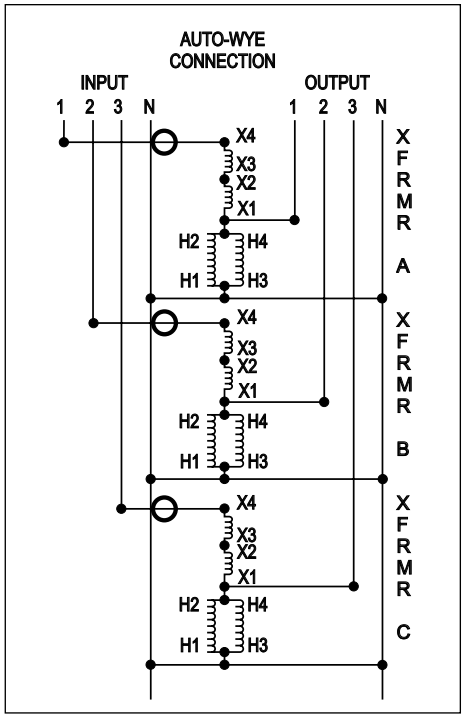

Diagram K2 – Bucking

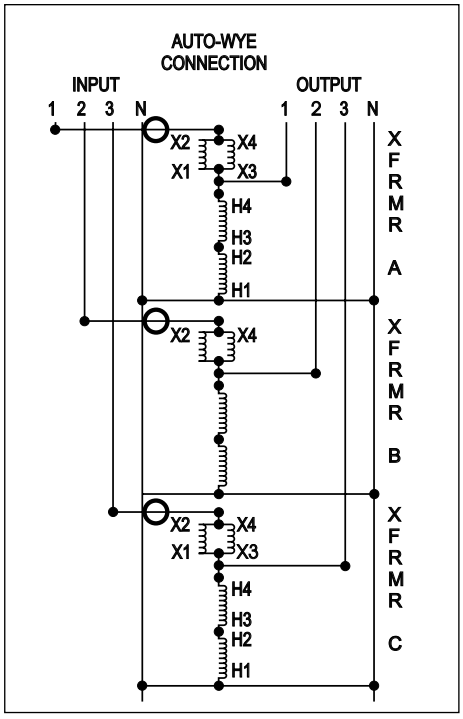

Diagram L2 – Bucking

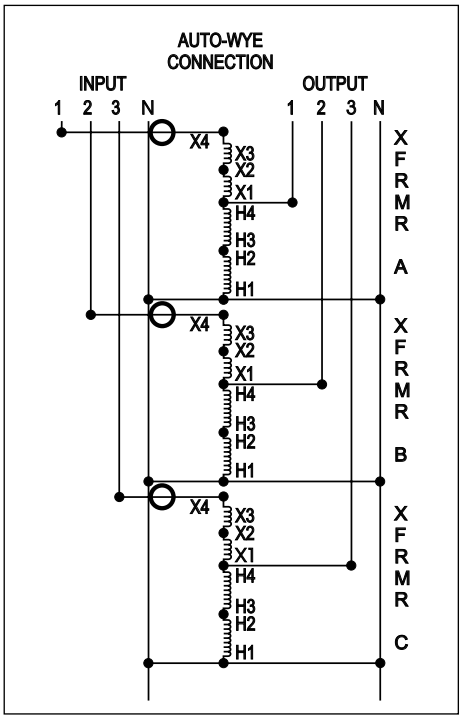

Diagram M2 – Bucking

Application Note

Application Limitations with Buck-Boost Transformers

1. **A Buck–Boost transformer cannot be used to develop a three phase, four wire wye circuit from a three phase, three wire delta circuit.**

   A delta to wye connection does not supply enough current carrying capability to provide for unbalanced currents flowing in the neutral wire of the four wire circuit. The neutral created is not stable and under load will not deliver desired line to neutral voltages. This connection would also be in violation of the National Electric Code, Article 210.9.

2. **Buck–Boost transformers cannot be used in a closed delta connection.**

   A closed delta requires more kVA capacity than a wye or an open delta connection, plus phase shifting comes into play on the output side.

3. **Buck–Boost transformers should not be used to correct for voltage drop on a long circuit run where the load fluctuates.**

   Voltage drop varies with the load and buck-boost transformers are connected for a specific voltage change. If a buck-boost transformer was used to correct voltage drop during peak loading conditions, high voltages may result under light load conditions. This could be equally detrimental to the load and possibly pose safety hazards.

4. **Buck–Boost transformers cannot be used to create a 240/120 Volt, single phase service from a 208Y/120 Volt three phase supply.**

   Two problems that would occur:

   A. Two neutrals would exist on the same circuit. Since neutrals must be grounded according to the National Electric Code, a short circuit would be created.

   B. Unbalanced line to output neutral voltages would be created; one line would read 120 Volts, the other 130+ Volts.

What is a Buck-Boost transformer and why is it used?

Isolation transformers have separate primary and secondary windings, electrically insulated and isolated from one another. With a relatively high voltage primary (typically 120, 240 or 480 Volts) and a relatively low voltage secondary (typically 12, 16, 24, 32 or 48 Volts), buck-boost transformers are designed to be field connected as autotransformers. These are transformers with one continuous winding, a portion of which is jointly shared between the input and the output. No electrical isolation is present in an autotransformer.

Buck-Boost transformers have two major uses:

1. When field connected as an autotransformer, they can be used to Buck (lower) or Boost (raise) available line voltage in the range of 5 to 27% and at a kVA rating many times that listed on the transformer nameplate.

2. When left as an isolation transformer, they can be used to supply power to low voltage circuits at the nameplate rating listed.

The importance of altering available line voltage.

Electrical equipment is designed to operate at maximum efficiency at a specific standard supply voltage. Your voltage may not be at the standard supply voltage level. Causes can be proximity to a large utility transformer, losses in the line voltage due to loads on that circuit, or a difference between the standard supply voltage available and the standard supply voltage needed to run the equipment.

Normally the problem is having low voltage available. Low voltage on a circuit, even as little as 5% lower can cause a decrease in incandescent light output, and a decrease in resistive heat output. With motors low voltage can cause a decrease in motor torque, an increase in motor amperage requirements, an increase in motor temperature and decrease in motor life expectancy.

Мы молодая и активно развивающаяся компания в области поставок электронных компонентов. Мы поставляем электронные компоненты отечественного и импортного производства напрямую от производителей и с крупнейших складов мира.

Благодаря сотрудничеству с мировыми поставщиками мы осуществляем комплексные и плановые поставки широчайшего спектра электронных компонентов.

Собственная эффективная логистика и склад в обеспечивает надежную поставку продукции в точно указанные сроки по всей России.

Мы осуществляем техническую поддержку нашим клиентам и предпродажную проверку качества продукции. На все поставляемые продукты мы предоставляем гарантию .

Осуществляем поставки продукции под контролем ВП МО РФ на предприятия военно-промышленного комплекса России , а также работаем в рамках 275 ФЗ с открытием отдельных счетов в уполномоченном банке. Система менеджмента качества компании соответствует требованиям ГОСТ ISO 9001.

Минимальные сроки поставки, гибкие цены, неограниченный ассортимент и индивидуальный подход к клиентам являются основой для выстраивания долгосрочного и эффективного сотрудничества с предприятиями радиоэлектронной промышленности, предприятиями ВПК и научно-исследовательскими институтами России.

С нами вы становитесь еще успешнее!

Наши контакты:

Телефон: +7 812 627 14 35

Электронная почта: sales@st-electron.ru

Адрес: 198099, Санкт-Петербург, Промышленная ул, дом № 19, литера Н, помещение 100-Н Офис 331