Is Now A Part Of

Visit www.maxlinear.com
for more information about
MaxLinear Inc.

SP202E,SP232E, SP233E, SP310E and SP312E

High Performance RS-232 Line Drivers/Receivers

FEATURES

- Operates from a Single +5V Power Supply
- Meets all RS-232D and ITU V.28 Specifications
- Operates with 0.1µF to 10µF Ceramic Capacitors
- No External Capacitors required (SP233E)
- Low Power Shutdown (SP310E, SP312E)
- High Data Rate - 120kbps under load
- Low power CMOS Operation
- Lead Free packaging available
- Improved ESD Specifications:
  +/-15kV Human Body Model

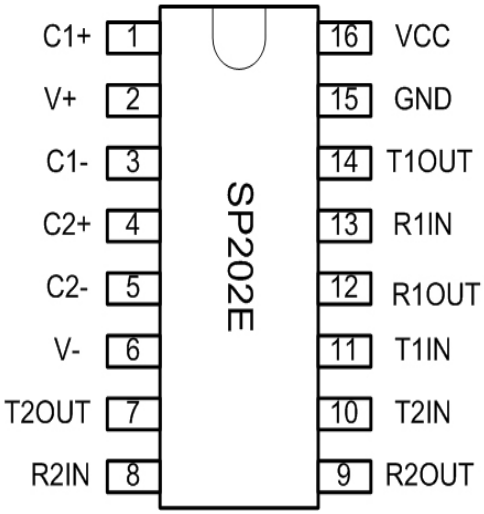

DESCRIPTION

The SP202E, SP232E, SP233E, SP310E and SP312E devices are a family of line driver and receiver pairs that meets the specifications of RS-232 and V.28 serial protocols. The devices are pin-to-pin compatible with Exar's SP232A, SP233A, SP310A and SP312A devices as well as popular industry standard pinouts. The ESD tolerance has been improved on these devices to over +/-15kV for Human Body Model. This series offer a 120kbps data rate under load, small ceramic type 0.1µF charge pump capacitors and overall ruggedness for comercial applications. Features include Exar's BiCMOS design which allowing low power operation without sacrificing performance. The series is available in lead free packages with commercial and industrial temperature ranges.

SELECTION TABLE

Model	Number of RS-232		No. of RX active in Shutdown	No. of External 0.1µF Capacitors	Shutdown	WakeUp	TTL Tri-State
	Drivers	Receivers					
SP202E	2	2	0	4	No	No	No
SP232E	2	2	0	4	No	No	No
SP233E	2	2	0	0	No	No	No
SP310E	2	2	0	4	Yes	No	Yes
SP312E	2	2	2	4	Yes	Yes	Yes

ABSOLUTE MAXIMUM RATINGS

This is a stress rating only and functional operation of the device at these ratings or any other above those indicated in the operation section of the specification is not implied. Exposure to absolute maximum ratings conditions for extended periods of time may affect reliability.

Supply Voltage (V_{CC}).....+ 6V
V+..... (Vcc-0.3V) to +11.0V
V- .....-11.0V
Input Voltages
Tin.....-0.3V to (Vcc + 0.3V)
Rin.....+/-15V
Output Voltages
Tout.....(V+, +0.3V) to (V-, -0.3V
Rout.....-0.3V to (Vcc + 0.3V)

Short Circuit duration
Tout.....Continuous
Package Power Dissipation:
Plastic DIP.....375mW
(derate 7mW/°C above +70°C)
Small Outline.....375mW
(derate 7mW/°C above +70°C)
Storage Temperature.....-65°C to +150°C

ELECTRICAL CHARACTERISTICS

Vcc = 5V ±10%, 0.1µF charge pump capacitors, T_{MIN} to T_{MAX}, unless otherwise noted, Typical values are Vcc = 5V and T_A=25°C

PARAMETER	TEST CONDITIONS	MIN	TYP	MAX	UNIT
TTL INPUT					
Logic Threshold LOW	T_{IN}, $\overline{EN}$, $\overline{SD}$, ON/$\overline{OFF}$			0.8	Volts
Logic Threshold HIGH	T_{IN}, $\overline{EN}$, $\overline{SD}$, ON/$\overline{OFF}$	2.0			Volts
Logic Pull-Up Current	T_{IN} = 0V		15	200	µA
TTL OUTPUT					
Output Voltge LOW	I_{OUT} = 3.2mA: V_{CC} = +5V			0.4	Volts
Output Voltage HIGH	I_{OUT} = -1.0mA	3.5			Volts
Leakage Current **; T_A = +25°C	$\overline{EN}$ = V_{CC}, 0V ≤ V_{OUT} ≤ Vcc		0.05	+/-10	µA
RS-232 OUTPUT					
Output Voltage Swing	All Transmitter outputs loaded with 3k ohms to GND	+/-5.0	+/-6		Volts
Output Resistance	Vcc = 0V, Vout = +/-2V	300			Ohms
Output Short Circuit Current	Infinite Duration		+/-18		mA
Maximum Data Rate	CL = 2500pF, RL = 3kΩ	120	240		kbps
RS-232 INPUT					
Voltage Range		-15		+15	Volts
Voltage Threshold LOW	Vcc = 5V, T_A=25°C	0.8	1.2		Volts
Voltage Threshold HIGH	Vcc = 5V, T_A=25°C		1.7	2.8	Volts
Hysteresis	Vcc = 5V, T_A=25°C	0.2	0.5	1.0	Volts
Resistance	T_A = 25°C, -15V ≤ V_{IN} ≤ +15V	3	5	7	kΩ

** SP310E and SP312E only

ELECTRICAL CHARACTERISTICS

Vcc = 5V ±10%, 0.1µF charge pump capacitors, T_{MIN} to T_{MAX}, unless otherwise noted, Typical values are Vcc = 5V and T_A=25°C

Parameter	TEST CONDITIONS	MIN	TYP	MAX	Unit
DYNAMIC CHARACTERISTICS					
Driver Propagation Delay	TTL to RS-232; C_L = 50pF		1.5	3.0	µs
Receiver Propagation Delay	RS-232 to TTL		0.1	1.0	µs
Instantaneous Slew Rate	C_L = 10pF, R_L = 3-7kΩ; T_A= 25°C			30	V/µs
Transition Region Slew Rate	C_L = 2500pF, R_L = 3kΩ; Measured from +3V to -3V or -3V to +3V		10		V/µs
Output Enable Time **	SP310E and SP312E only		400		ns
Output Disable Time **	SP310A and SP312A only		250		ns
POWER REQUIREMENTS					
Vcc Power Supply Current	No Load, Vcc = 5V, T_A= 25°C		3	5	mA
Vcc Power Supply Current, Loaded	All Transmitters R_L = 3kΩ, T_A= 25°C		15		mA
Shutdown Supply Current **	Vcc = 5V, T_A= 25°C		1	5	µA

** SP310E and SP312E only

PERFORMANCE CURVES

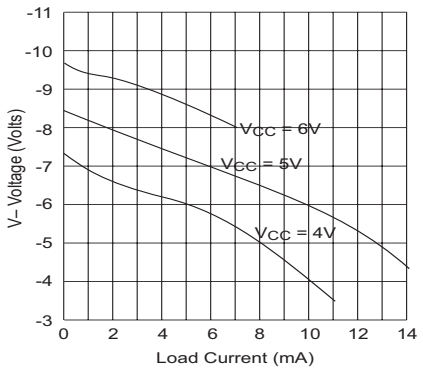

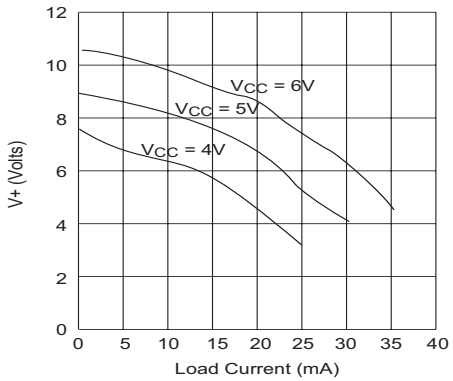

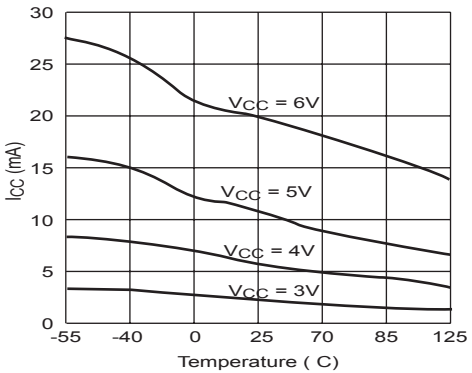

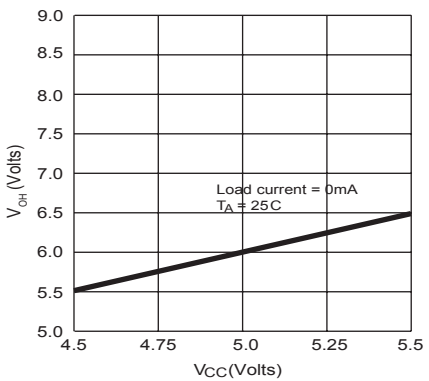

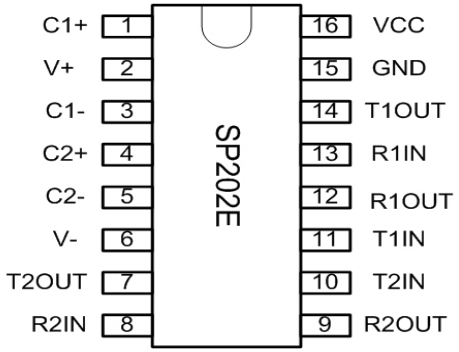
SP202E
C1+ 1
V+ 2
C1- 3
C2+ 4
C2- 5
V- 6
T2OUT 7
R2IN 8
16 VCC
15 GND
14 T1OUT
13 R1IN
12 R1OUT
11 T1IN
10 T2IN
9 R2OUT

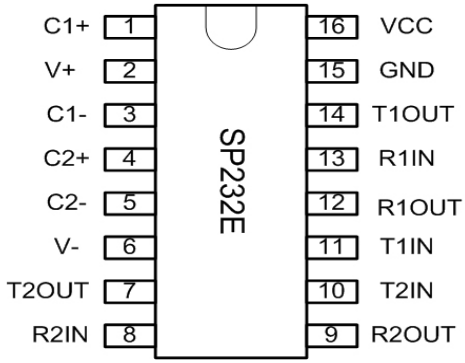
SP232E
C1+ 1
V+ 2
C1- 3
C2+ 4
C2- 5
V- 6
T2OUT 7
R2IN 8
16 VCC
15 GND
14 T1OUT
13 R1IN
12 R1OUT
11 T1IN
10 T2IN
9 R2OUT

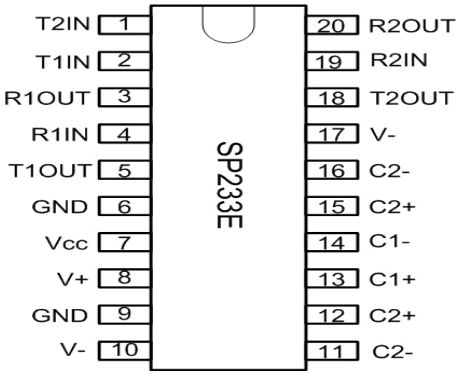
SP233E
T2IN 1
T1IN 2
R1OUT 3
R1IN 4
T1OUT 5
GND 6
Vcc 7
V+ 8
GND 9
V- 10
20 R2OUT
19 R2IN
18 T2OUT
17 V-
16 C2-
15 C2+
14 C1-
13 C1+
12 C2+
11 C2-

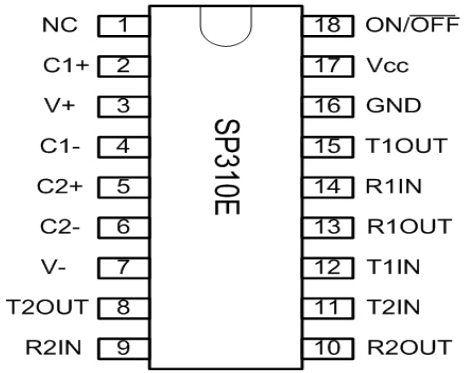
SP310E
NC 1
C1+ 2
V+ 3
C1- 4
C2+ 5
C2- 6
V- 7
T2OUT 8
R2IN 9
18 ON/OFF
17 Vcc
16 GND
15 T1OUT
14 R1IN
13 R1OUT
12 T1IN
11 T2IN
10 R2OUT

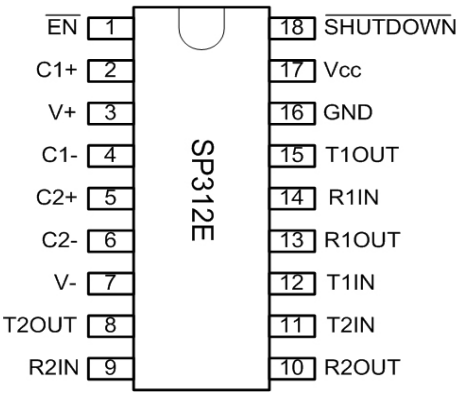
SP312E
EN 1
C1+ 2
V+ 3
C1- 4
C2+ 5
C2- 6
V- 7
T2OUT 8
R2IN 9
18 SHUTDOWN
17 Vcc
16 GND
15 T1OUT
14 R1IN
13 R1OUT
12 T1IN
11 T2IN
10 R2OUT

DETAILED DESCRIPTION

The SP202E, SP232E, SP233E, SP310E and SP312A devices are a family of line driver and receiver pairs that meet the EIA/TIA-232 and V.28 serial communication protocols. The ESD tolerance has been improved on these devices to over +/-15kV for Human Body Model. These devices are pin-to-pin compatible with Exar's 232A, 233A, 310A and 312A as well as popular industry standards. This family of parts offer a 120kbps data rate, 10V/µs slew rate and an on-board charge pump that operates from a single 5V supply using 0.1µF ceramic capacitors.

The SP202E, 232E, 233E, 310E and 312E devices have internal charge pump voltage converters which allow them to operate from a single +5V supply. The charge pumps will operate with polarized or non-polarized capacitors ranging from 0.1 to 10µF and will generate the +/-6V needed to generate the RS-232 output levels.

The SP233E design offers internal charge pump capacitors. The SP310E provides an ON/$\overline{\text{OFF}}$ input that simultaneously disables the internal charge pump circuit and puts all transmitter and receiver outputs into a high impedance state. The SP312E is identical to the SP310E but with seperate tri-state and shutdown inputs

Theory Of Operation

The SP202E, SP232E, SP233E, SP310E and SP312E devices are made up of three basic circuit blocks: 1. Drivers, 2. Receivers, and 3. charge pump. Each block is described below.

Drivers

The drivers are inverting level transmitters that convert TTL or CMOS logic levels to EIA/TIA-232 levels with an inverted sense relative to the input logic levels. The typical driver output voltage swing is +/-6V. Even under worst case loading conditions of 3k ohms and 2500pF, the driver output is guaranteed to be +/-5.0V minimum, thus satisfying the RS-232 specification. The driver outputs are protected against infinite short-circuits to ground without degradation in reliability.

The slew rate of the driver output is internally limited to 30V/µs in order to meet the EIA standards (EIA-232F). Additionally, the driver outputs LOW to HIGH transition meets the montonic output requirements of the standard.

Receivers

The receivers convert EIA/TIA-232 signal levels to inverted TTL or CMOS logic output levels. Since the input is usually from a transmission line, where long cable length and system interference can degrade the signal, the inputs have a typical hysteresis margin of 500mV. This ensures that the receiver is virtually immune to noisy transmission lines. The input thresholds are 0.8V minimum and 2.8V maximum, again well within the +/-3V RS-232 requirements. Should an input be left unconnected, an internal 5kohm pull-down resistor to ground will commit the output of the receiver to a HIGH state.

In actual system applications, it is quite possible for signals to be applied to receiver inputs before power is applied to the receiver circuitry. This occurs, for example, when a PC user attempts to print, only to realize that the printer wasn't turned on. In this case an RS-232 signal from the PC will appear on the receiver input at the printer. When the printer power is turned on, the receiver will operate normally. All of these devices are fully protected.

Charge pump

The charge pump is an Exar patented design and uses a unique approach compared to older less efficiant designs. The charge pump requires 4 external capacitors and uses a four phase voltage shifting technique. The internal power supply consists of a dual charge pump that provides a driver output voltage swing of +/-6V. The internal oscillator controls the four phases of the voltage shifting. A description of each phase follows:

Phase 1

Vss charge store and double: The positive terminals of capacitors C1 and C2 are charged from Vcc with their negative terminals initially connected to ground. C1+ is then connected to ground and the stored charge from C1- is superimposed onto C2-. Since C2+ is still connected to Vcc the voltage potential across C2 is now 2 x Vcc.

Phase 2

Vss transfer and invert: Phase two connects the negative terminal of C2 to the Vss storage capacitor and the positive terminal of C2 to ground. This transfers the doubled and inverted (V-) voltage onto C4. Meanwhile, capacitor

C1 is charged from Vcc to prepare it for its next phase.

Phase 3

Vdd charge store and double: Phase three is identical to the first phase. The positive terminals of C1 and C2 are charged from Vcc with their negative terminals initially connected to ground. C1+ is then connected to ground and the stored charge from C1- is superimposed onto C2-. Since C2+ is still connected to Vcc the voltage potential across capacitor C2 is now 2 x Vcc.

Phase 4

Vdd transfer: The fourth phase connects the negative terminal of C2 to ground and the positive terminal of C2 to the Vdd storage capacitor. This transfers the doubled (V+) voltage onto C3. Meanwhile, capacitor C1 is charged from Vcc to prepare it for its next phase.

The clock rate for the charge pump typically operates at greater than 15kHz allowing the pump to run efficiently with small 0.1uF capacitors. Efficient operation depends on rapid charging and discharging of C1 and C2, therefore capacitors should be mounted as close as possible to the IC and have low ESR (equivalent series resistance). Inexpensive surface mount, ceramic capacitors are ideal for using on charge pump. If polarized capacitors are used the positive and negative terminals should be connected as shown in the typical operating circuit. A diagram of the individual phases are shown in Figure 1.

$\overline{\text{Shutdown}}$ ($\overline{\text{SD}}$) and $\overline{\text{Enable}}$ ($\overline{\text{EN}}$) features for the SP310E and SP312E

Both the SP310E and SP312E have a shutdown / standby mode to conserve power in battery-powered applications. To activate the shutdown mode, which stops the operation of the charge pump, a logic "0" is applied to the appropriate control line. For the SP310E, this control line is the ON/$\overline{\text{OFF}}$ (pin 18) input. Activating the shutdown mode puts the SP310E transmitter and receiver ouptuts into a high impedance condition. For the SP312E, this control line is the $\overline{\text{SHUTDOWN}}$ (pin18) input; this also puts the transmitter outputs in a tri-state mode. The receiver outputs can be tri-stated seperately during normal operation or shutdown by applying a logic "1" on the $\overline{\text{EN}}$ line (pin 1).

Wake-Up Feature for the SP312E

The SP312E has a wake-up feature that keeps the receivers active when the device is placed into shutdown. Table 1 defines the truth table for the Wake-Up function. When only the receivers are activated, the SP312E typically draws less than 5uA supply current. In the case of when a modem is interfaced to a computer in power down mode, the Ring Indicator (RI) signal from the modem would be used to "wake-up" the computer, allowing it to accept data transmission.

After the ring indicator has propagated through the SP312E receiver, it can be used to trigger the power management circuitry of the computer to power up the microprocessor, and bring the $\overline{\text{SD}}$ pin of the SP312E to a logic high, taking it out of the shutdown mode. The receiver propagation delay is typically 1us. The enable time for V+ and V- is typically 2ms. After V+ and V- have settled to their final values, a signal can be sent back to the modem on the data terminal ready (DTR) pin signifying that the computer is ready to accept the transmit data.

$\overline{\text{SD}}$	$\overline{\text{EN}}$	Power Up/Down	Receiver outputs
0	0	Down	Enabled
0	1	Down	Tri-state
1	0	Up	Enabled
1	1	Up	Tri-state

Table 1. Wake-up Function truth table

Pin Strapping for the SP233E

To operate properly, the following pairs of pins must be externally wired together as noted in table 2:

Pins Wired Together	SOICW
Two V- pins	10 & 17
Two C2+ pins	12 & 15
Two C- pins	11 & 16
	Connect Pins 6 and 9 to GND

Table 2. Pin Strapping table for SP233E

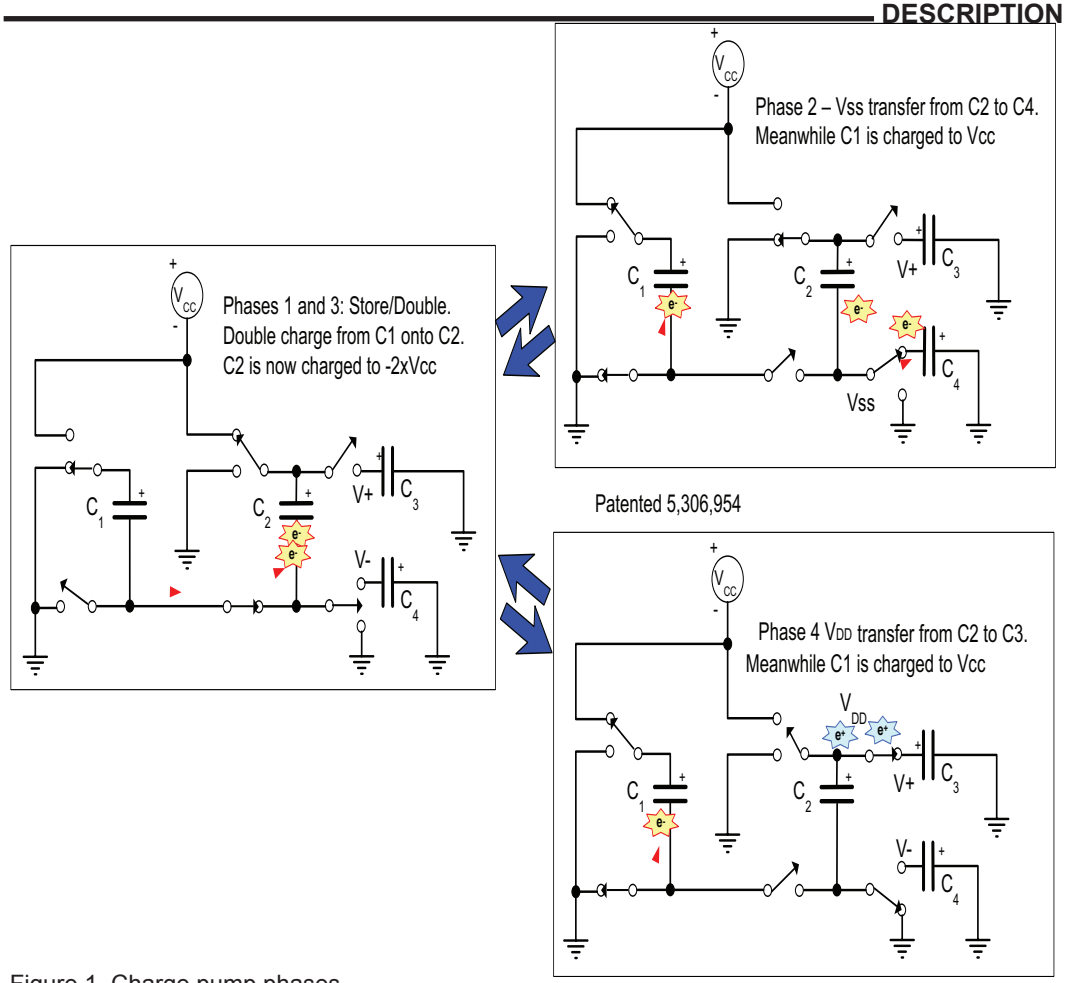

Figure 1. Charge pump phases

ESD TOLERANCE

The SP202E, 232E, 233E, 310E and 312E devices incorporates ruggedized ESD cells on all driver outputs and receiver input pins. The ESD structure is improved over our previous family for more rugged applications and environments sensitive to electro-static discharges and associated transients. The improved ESD tolerance is at least +/-15kV Human Body Model without damage nor latch-up.

The Human Body Model has been the generally accepted ESD testing method for semiconductors. This method is also specified in MIL-STD-883, Method 3015.7 for ESD testing.

The premise of this ESD test is to simulate the human body's potential to store electrostatic energy and discharge it to an intergrated circuit. The simulation is peformed by using a test model as shown in figure 2. This method will test the IC's capability to withstand an ESD transient during normal handling such as in manufacturing areas where the IC's tend to be handled frequently.

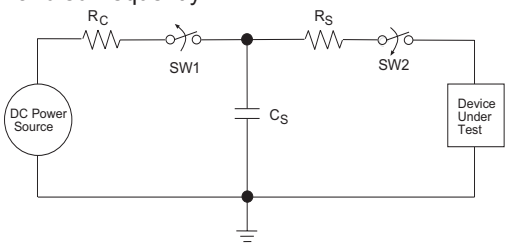

Figure 2. ESD test circuit for Human Body Model

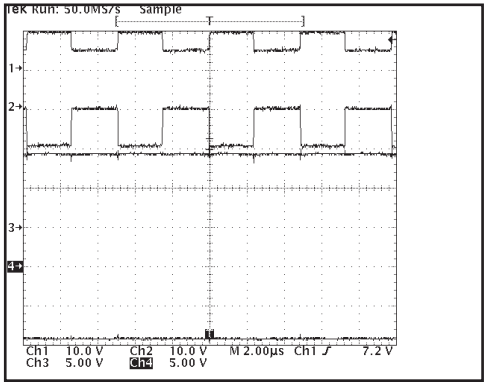

Figure 3, SP232E Charge pump waveforms-no load (1 = C1+, 2 = C2+, 3 = V+, 4 = V-).

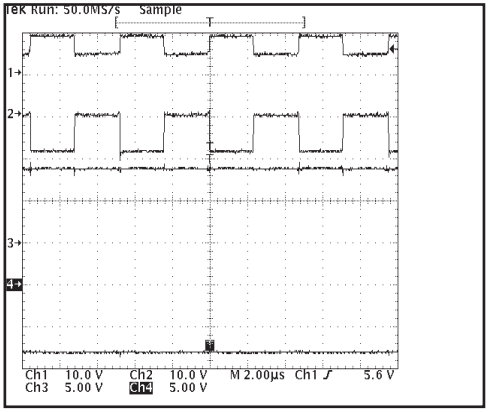

Figure 4, SP232E Charge pump waveforms when fully loaded with 3Kohms (1 = C1+, 2 = C2+, 3 = V+, 4 = V-).

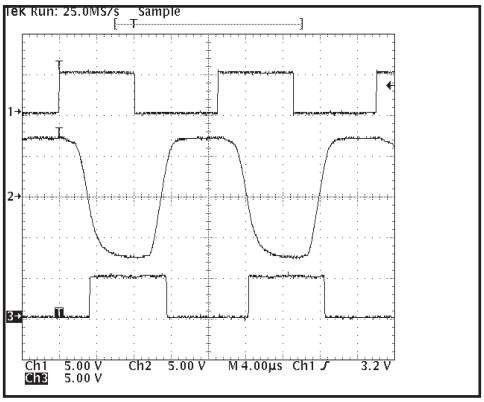

Figure 5, Loopback results at 60KHZ and 2500pF load (1 = TXin, 2 = TXout/RXin, 3 = RXout).

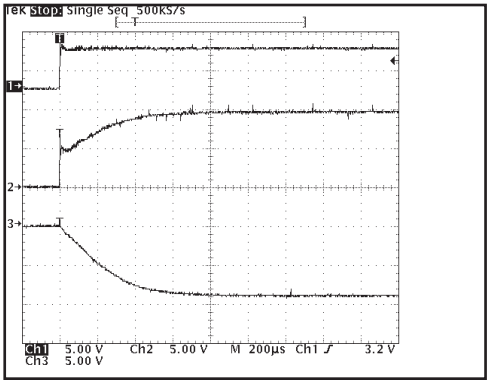

Figure 6, Charge pump outputs at start up (1 = Vcc, 2 = V+, 3 = V-).

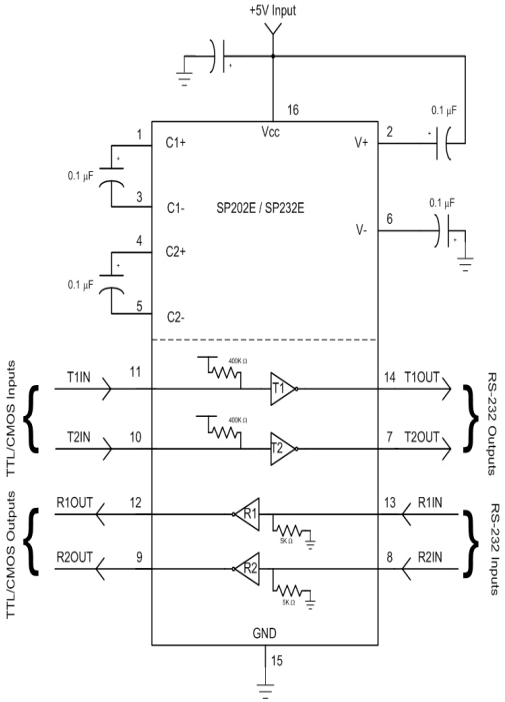

Figure 7, SP202E and SP232E Typical Application circuit

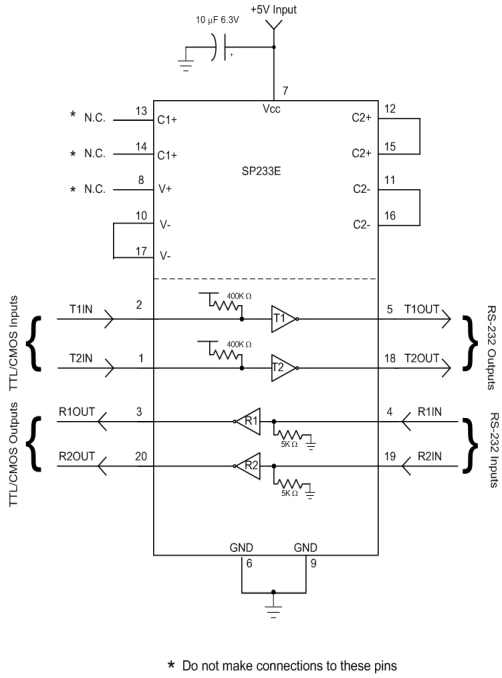

* Do not make connections to these pins

Figure 9, SP233ECT Typical Application circuit

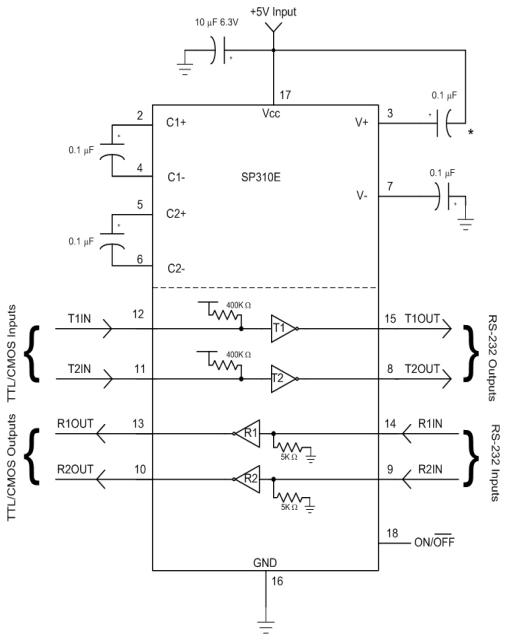

* The Negative terminal of the V+ storage capacitor can be tied to either Vcc or GND. Connecting the capacitor to Vcc is recommended.

Figure 8, SP310E Typical Application circuit

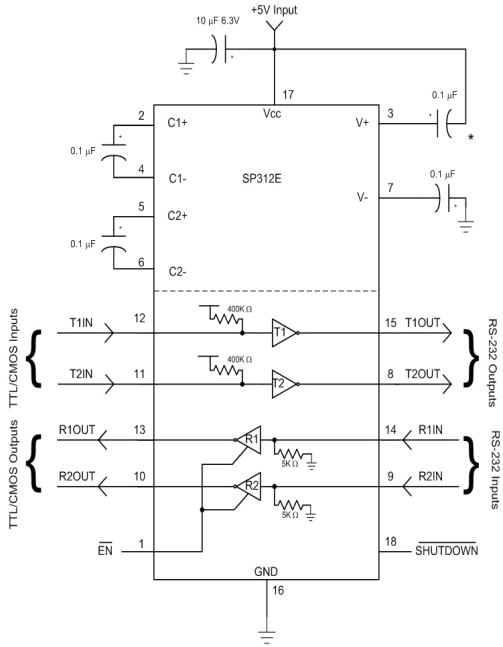

* The Negative terminal of the V+ storage capacitor can be tied to either Vcc or GND. Connecting the capacitor to Vcc is recommended.

Figure 10, SP312E Typical Application circuit

REVISION HISTORY			
REV.	DISCRIPTION	DATE	APP'D
A	DRAWING ORIGINATION	11/21/05	JL
B	DRAWING FORMAT MODIFICATION	04/26/06	JL
C	CHANGE DRAWING LOGO AND COMPANY NAME	11/21/07	JL

REMARKS:
FOR 8LD AND 16LD
ALL END LEADS (4X)
ARE HALF LEAD TYPES

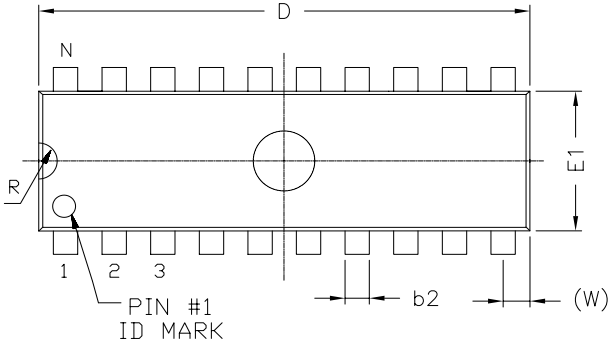

Top View

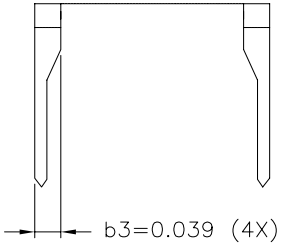

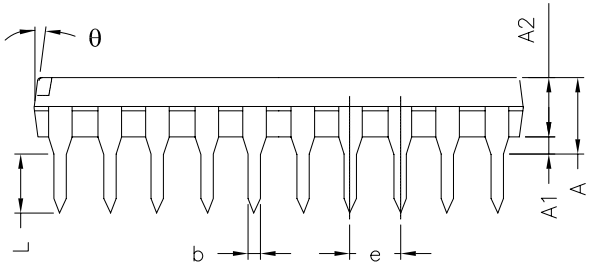

Side View

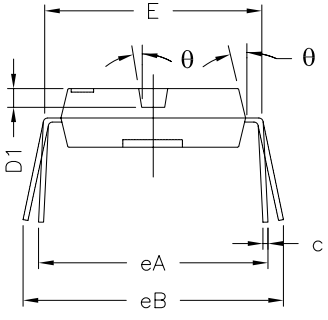

Front View

16 Pin PDIP JEDEC MS-001 Variation BB						
SYMBOLS	DIMENSIONS IN INCH (Control Unit)			DIMENSIONS IN MM (Reference Unit)		
	MIN	NOM	MAX	MIN	NOM	MAX
A	—	—	0.210	—	—	5.33
A1	0.015	—	—	0.38	—	—
A2	0.115	0.130	0.195	2.92	3.30	4.95
b	0.014	0.018	0.022	0.36	0.46	0.56
b2	0.045	0.060	0.070	1.14	1.52	1.78
c	0.008	0.010	0.014	0.20	0.25	0.36
D1	0.030	—	0.060	0.76	—	1.52
E	0.300	0.310	0.325	7.62	7.87	8.26
E1	0.240	0.250	0.280	6.10	6.35	7.11
e	0.100 BSC			2.54 BSC		
eA	0.300 BSC			7.62 BSC		
eB	—	—	0.430	—	—	10.92
L	0.115	0.130	0.150	2.92	3.30	3.81
W	0.075 REF			1.91 REF		
R	0.030 BSC			0.76 BSC		
θ	4°	7°	10°	4°	7°	10°
D	0.735	0.755	0.775	18.67	19.18	19.69
N	16			16		

EXAR Powering Connectivity		EXAR CORPORATION	
		16 PIN PDIP PACKAGE OUTLINE	
Packaging Approval:		Drawing No: 16-PIN PDIP	
By: JL	Date: 11/21/07	Revision: C	Sheet: 1 OF 1

REVISION HISTORY			
REV.	DISCRIPTION	DATE	APP'D
A	DRAWING ORIGINATION	04/24/06	JL
B	CHANGE DRAWING LOGO AND COMPANY NAME	11/28/07	JL

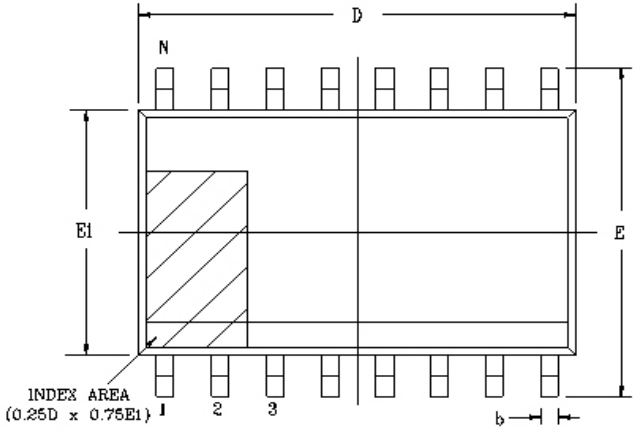

Top View

20 Pin SOICW JEDEC MS-013 Variation AC						
SYMBOLS	DIMENSIONS IN MM (Control Unit)			DIMENSIONS IN INCH (Reference Unit)		
	MIN	NOM	MAX	MIN	NOM	MAX
A	2.35	—	2.65	0.093	—	0.104
A1	0.10	—	0.30	0.004	—	0.012
A2	2.05	—	2.55	0.081	—	0.100
b	0.31	—	0.51	0.012	—	0.020
c	0.20	—	0.33	0.008	—	0.013
E	10.30 BSC			0.406 BSC		
E1	7.50 BSC			0.295 BSC		
e	1.27 BSC			0.050 BSC		
h	0.25	—	0.75	0.010	—	0.030
L	0.40	—	1.27	0.016	—	0.050
L1	1.40 REF			0.055 REF		
L2	0.25 BSC			0.010 BSC		
R	0.07	—	—	0.003	—	—
R1	0.07	—	—	0.003	—	—
θ	0°	—	8°	0°	—	8°
θ1	5°	—	15°	5°	—	15°
θ2	0°	—	—	0°	—	—
D	12.80 BSC			0.504 BSC		
N	20			20		

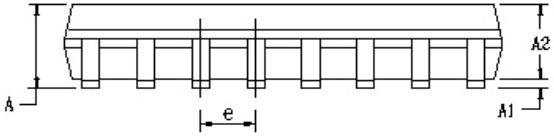

Side View

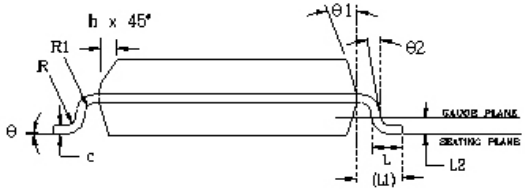

Front View

EXAR Powering Connectivity	EXAR CORPORATION	
	20 PIN SOICW PACKAGE OUTLINE	
Packaging Approval:	Drawing No: 20-PIN SOICW	
By: JL Date: 11/28/07	Revision: B	Sheet: 1 OF 1

REVISION HISTORY			
REV.	DISCRIPTION	DATE	APP'D
A	DRAWING ORIGINATION	04/24/06	JL
B	CHANGE DRAWING LOGO AND COMPANY NAME	11/21/07	JL

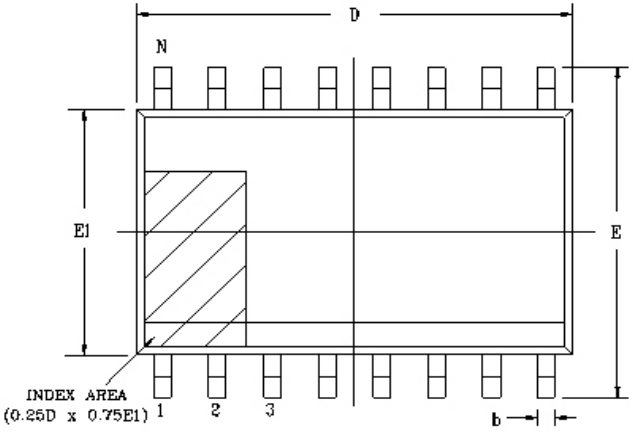

Top View

18 Pin SOICW JEDEC MS-013 Variation AB						
SYMBOLS	DIMENSIONS IN MM (Control Unit)			DIMENSIONS IN INCH (Reference Unit)		
	MIN	NOM	MAX	MIN	NOM	MAX
A	2.35	—	2.65	0.093	—	0.104
A1	0.10	—	0.30	0.004	—	0.012
A2	2.05	—	2.55	0.081	—	0.100
b	0.31	—	0.51	0.012	—	0.020
c	0.20	—	0.33	0.008	—	0.013
E	10.30 BSC			0.406 BSC		
E1	7.50 BSC			0.295 BSC		
e	1.27 BSC			0.050 BSC		
h	0.25	—	0.75	0.010	—	0.030
L	0.40	—	1.27	0.016	—	0.050
L1	1.40 REF			0.055 REF		
L2	0.25 BSC			0.010 BSC		
R	0.07	—	—	0.003	—	—
R1	0.07	—	—	0.003	—	—
θ	0°	—	8°	0°	—	8°
θ1	5°	—	15°	5°	—	15°
θ2	0°	—	—	0°	—	—
D	11.55 BSC			0.455 BSC		
N	18			18		

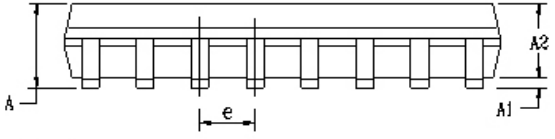

Side View

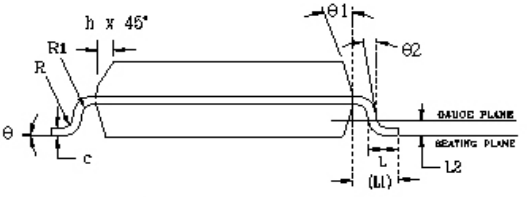

Front View

EXAR Powering Connectivity	EXAR CORPORATION		
	18 PIN SOICW PACKAGE OUTLINE		
Packaging Approval:	Drawing No:	18-PIN SOICW	
By: JL Date: 11/21/07	Revision: B	Sheet: 1 OF 1	

REVISION HISTORY			
REV.	DISCRIPTION	DATE	APP'D
A	DRAWING ORIGINATION	11/05/05	JL
B	DRAWING FORMAT MODIFICATION	09/13/06	JL
C	CHANGE DRAWING LOGO AND COMPANY NAME	11/21/07	JL

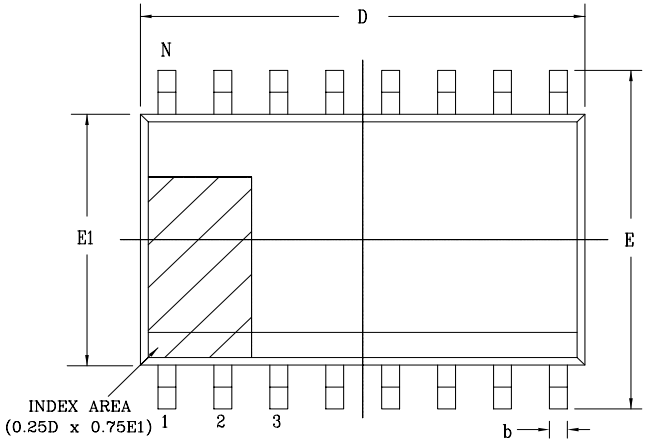

Top View

16 Pin SOICW JEDEC MS-013 Variation AA						
SYMBOLS	DIMENSIONS IN MM (Control Unit)			DIMENSIONS IN INCH (Reference Unit)		
	MIN	NOM	MAX	MIN	NOM	MAX
A	2.35	—	2.65	0.093	—	0.104
A1	0.10	—	0.30	0.004	—	0.012
A2	2.05	—	2.55	0.081	—	0.100
b	0.31	—	0.51	0.012	—	0.020
c	0.20	—	0.33	0.008	—	0.013
E	10.30 BSC			0.406 BSC		
E1	7.50 BSC			0.295 BSC		
e	1.27 BSC			0.050 BSC		
h	0.25	—	0.75	0.010	—	0.030
L	0.40	—	1.27	0.016	—	0.050
L1	1.40 REF			0.055 REF		
L2	0.25 BSC			0.010 BSC		
R	0.07	—	—	0.003	—	—
R1	0.07	—	—	0.003	—	—
θ	0°	—	8°	0°	—	8°
θ1	5°	—	15°	5°	—	15°
θ2	0°	—	—	0°	—	—
D	10.30 BSC			0.405 BSC		
N	16			16		

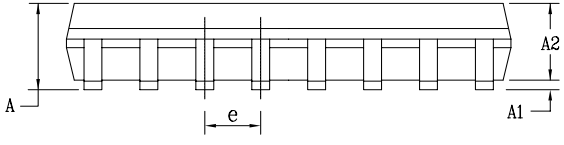

Side View

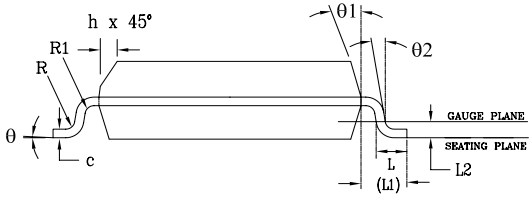

Front View

EXAR Powering Connectivity		EXAR CORPORATION	
		16 PIN SOICW PACKAGE OUTLINE	
Packaging Approval:		Drawing No:	16-PIN SOICW
By: JL	Date: 11/21/07	Revision: C	Sheet: 1 OF 1

REVISION HISTORY			
REV.	DISCRIPTION	DATE	APP'D
A	DRAWING ORIGINATION	10/12/05	JL
B	DRAWING FORMAT MODIFICATION	07/19/06	JL
C	CHANGE DRAWING LOGO AND COMPANY NAME	11/21/07	JL

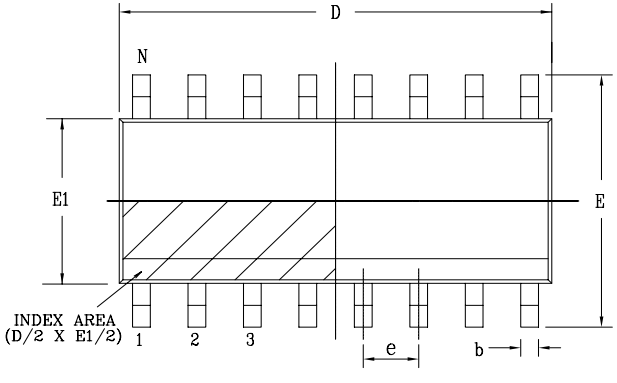

Top View

16 Pin SOICN JEDEC MS-012 Variation AC						
SYMBOLS	DIMENSIONS IN MM (Control Unit)			DIMENSIONS IN INCH (Reference Unit)		
	MIN	NOM	MAX	MIN	NOM	MAX
A	1.35	—	1.75	0.053	—	0.069
A1	0.10	—	0.25	0.004	—	0.010
A2	1.25	—	1.65	0.049	—	0.065
b	0.31	—	0.51	0.012	—	0.020
c	0.17	—	0.25	0.007	—	0.010
E	6.00 BSC			0.236 BSC		
E1	3.90 BSC			0.154 BSC		
e	1.27 BSC			0.050 BSC		
h	0.25	—	0.50	0.010	—	0.020
L	0.40	—	1.27	0.016	—	0.050
L1	1.04 REF			0.041 REF		
L2	0.25 BSC			0.010 BSC		
R	0.07	—	—	0.003	—	—
R1	0.07	—	—	0.003	—	—
θ	0°	—	8°	0°	—	8°
θ1	5°	—	15°	5°	—	15°
θ2	0°	—	—	0°	—	—
D	9.90 BSC			0.390 BSC		
N	16			16		

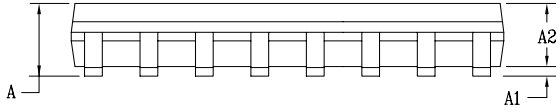

Side View

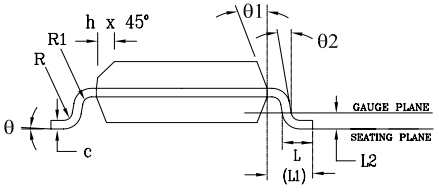

Front View

EXAR Powering Connectivity		EXAR CORPORATION	
		16 PIN SOICN PACKAGE OUTLINE	
Packaging Approval:		Drawing No: 16-PIN SOICN	
By: JL	Date: 11/21/07	Revision: C	Sheet: 1 OF 1

Part number	Temperature range	Package Type
SP202ECN-L	0^0C to +70^0C	16 pin NSOIC
SP202ECN-L/TR	0^0C to +70^0C	16 pin NSOIC
SP202ECP-L	0^0C to +70^0C	16 pin PDIP
SP202ECT-L	0^0C to +70^0C	16 pin SOICW
SP202ECT-L/TR	0^0C to +70^0C	16 pin SOICW
SP202EEN-L	-40^0C to +85^0C	16 pin NSOIC
SP202EEN-L/TR	-40^0C to +85^0C	16 pin NSOIC
SP202EEP-L	-40^0C to +85^0C	16 pin PDIP
SP202EET-L	-40^0C to +85^0C	16 pin SOICW
SP202EET-L/TR	-40^0C to +85^0C	16 pin SOICW
SP232ECN-L	0^0C to +70^0C	16 pin NSOIC
SP232ECN-L/TR	0^0C to +70^0C	16 pin NSOIC
SP232ECP-L	0^0C to +70^0C	16 pin PDIP
SP232ECT-L	0^0C to +70^0C	16 pin SOICW
SP232ECT-L/TR	0^0C to +70^0C	16 pin SOICW
SP232EEN-L	-40^0C to +85^0C	16 pin NSOIC
SP232EEN-L/TR	-40^0C to +85^0C	16 pin NSOIC
SP232EEP-L	-40^0C to +85^0C	16 pin PDIP
SP232EET-L	-40^0C to +85^0C	16 pin SOICW
SP232EET-L/TR	-40^0C to +85^0C	16 pin SOICW
SP233ECT-L	0^0C to +70^0C	20 pin SOICW
SP233ECT-L/TR	0^0C to +70^0C	20 pin SOICW
SP233EET-L	-40^0C to +85^0C	20 pin SOICW
SP233EET-L/TR	-40^0C to +85^0C	20 pin SOICW
SP310ECT-L	0^0C to +70^0C	18 pin SOICW
SP310ECT-L/TR	0^0C to +70^0C	18 pin SOICW
SP310EET-L	-40^0C to +85^0C	18 pin SOICW
SP310EET-L/TR	-40^0C to +85^0C	18 pin SOICW
SP312ECT-L	0^0C to +70^0C	18 pin SOICW
SP312ECT-L/TR	0^0C to +70^0C	18 pin SOICW
SP312EET-L	-40^0C to +85^0C	18 pin SOICW
SP312EET-L/TR	-40^0C to +85^0C	18 pin SOICW

All packages are available as lead free (RoHS compliant).

REVISION HISTORY		
Date	Revision	Description
7-19-04	A	Original Sipex Data sheet
11-06-08	1.0.0	Generate new Datasheet using Exar format and change revision to 1.0.0. Remove IEC Air and Contact ESD ratings. Update ordering information to remove EOL part numbers. Update charge pump description to show regulated charge pump design.
06-03-11	1.0.1	Remove SP310ECP-L and SP310EEP-L per PDN 110510-01

Notice

EXAR Corporation reserves the right to make changes to any products contained in this publication in order to improve design, performance or reliability. EXAR Corporation assumes no representation that the circuits are free of patent infringement. Charts and schedules contained herein are only for illustration purposes and may vary depending upon a user's specific application. While the information in this publication has been carefully checked; no responsibility, however, is assumed for inaccuracies.

EXAR Corporation does not recommend the use of any of its products in life support applications where the failure or malfunction of the product can reasonably be expected to cause failure of the life support system or to significantly affect its safety or effectiveness. Products are not authorized for use in such applications unless EXAR Corporation receives, in writting, assurances to its satisfaction that: (a) the risk of injury or damage has been minimized ; (b) the user assumes all such risks; (c) potential liability of EXAR Corporation is adequately protected under the circumstances.

Copyright 2011 EXAR Corporation

Datasheet June 2011

Send your serial transceiver technical inquiry with technical details to: serialtechsupport@exar.com

Reproduction, in part or whole, without the prior written consent of EXAR Corporation is prohibited.

The content of this document is furnished for informational use only, is subject to change without notice, and should not be construed as a commitment by MaxLinear, Inc.. MaxLinear, Inc. assumes no responsibility or liability for any errors or inaccuracies that may appear in the informational content contained in this guide. Complying with all applicable copyright laws is the responsibility of the user. Without limiting the rights under copyright, no part of this document may be reproduced into, stored in, or introduced into a retrieval system, or transmitted in any form or by any means (electronic, mechanical, photocopying, recording, or otherwise), or for any purpose, without the express written permission of MaxLinear, Inc.

Maxlinear, Inc. does not recommend the use of any of its products in life support applications where the failure or malfunction of the product can reasonably be expected to cause failure of the life support system or to significantly affect its safety or effectiveness. Products are not authorized for use in such applications unless MaxLinear, Inc. receives, in writing, assurances to its satisfaction that: (a) the risk of injury or damage has been minimized; (b) the user assumes all such risks; (c) potential liability of

MaxLinear, Inc. is adequately protected under the circumstances.

MaxLinear, Inc. may have patents, patent applications, trademarks, copyrights, or other intellectual property rights covering subject matter in this document. Except as expressly provided in any written license agreement from MaxLinear, Inc., the furnishing of this document does not give you any license to these patents, trademarks, copyrights, or other intellectual property.

Company and product names may be registered trademarks or trademarks of the respective owners with which they are associated.

© 2017 MaxLinear, Inc. All rights reserved

Мы молодая и активно развивающаяся компания в области поставок электронных компонентов. Мы поставляем электронные компоненты отечественного и импортного производства напрямую от производителей и с крупнейших складов мира.

Благодаря сотрудничеству с мировыми поставщиками мы осуществляем комплексные и плановые поставки широчайшего спектра электронных компонентов.

Собственная эффективная логистика и склад в обеспечивает надежную поставку продукции в точно указанные сроки по всей России.

Мы осуществляем техническую поддержку нашим клиентам и предпродажную проверку качества продукции. На все поставляемые продукты мы предоставляем гарантию .

Осуществляем поставки продукции под контролем ВП МО РФ на предприятия военно-промышленного комплекса России , а также работаем в рамках 275 ФЗ с открытием отдельных счетов в уполномоченном банке. Система менеджмента качества компании соответствует требованиям ГОСТ ISO 9001.

Минимальные сроки поставки, гибкие цены, неограниченный ассортимент и индивидуальный подход к клиентам являются основой для выстраивания долгосрочного и эффективного сотрудничества с предприятиями радиоэлектронной промышленности, предприятиями ВПК и научно-исследовательскими институтами России.

С нами вы становитесь еще успешнее!

Наши контакты:

Телефон: +7 812 627 14 35

Электронная почта: sales@st-electron.ru

Адрес: 198099, Санкт-Петербург, Промышленная ул, дом № 19, литера Н, помещение 100-Н Офис 331