dsPIC33FJ06GS001/101A/102A/202A and dsPIC33FJ09GS302

16-Bit Microcontrollers and Digital Signal Controllers with High-Speed PWM, ADC and Comparators

Operating Conditions

- 3.0V to 3.6V, -40ºC to +125ºC, DC to 40 MIPS

Core: 16-Bit dsPIC33F CPU

- Code Efficient (C and Assembly) Architecture
- Two 40-Bit Wide Accumulators
- Single-Cycle (MAC/MPY) with Dual Data Fetch
- Single-Cycle Mixed-Sign MUL plus Hardware Divide
- 32-Bit Multiply Support

Clock Management

- ±2% Internal Oscillator
- Programmable PLLs and Oscillator Clock Sources
- Fail-Safe Clock Monitor (FSCM)
- Independent Watchdog Timer (WDT)
- Fast Wake-up and Start-up

Power Management

- Low-Power Management modes (Sleep, Idle, Doze)
- Integrated Power-on Reset and Brown-out Reset
- 2.0 mA/MHz Dynamic Current (typical)
- 135 µA I_{PD} Current (typical)

High-Speed PWM

- Up to Three PWM Pairs with Independent Timing
- Dead Time for Rising and Falling Edges
- 1.04 ns PWM Resolution for Dead Time, Duty Cycle, Phase and Frequency
- PWM Support for:
  - DC/DC, AC/DC, Inverters, PFC and Lighting
- Programmable Fault Inputs
- Flexible Trigger Configurations for ADC Conversions

Advanced Analog Features

- Two High-Speed Comparators with Direct Connection to the PWM module:
  - Buffered/amplified output drive
  - Independent 10-bit DAC for each comparator
  - Rail-to-rail comparator operation
  - DACOUT amplifier (1x, 1.8x)
  - Selectable hysteresis
  - Programmable output polarity
  - Interrupt generation capability

Advanced Analog Features (Continued)

- ADC module:
  - 10-bit resolution with Successive Approximation Register (SAR) converter (2 Msps) and three Sample-and-Hold (S&H) circuits
  - Up to 8 input channels grouped into four conversion pairs, plus two inputs for monitoring voltage references
  - Flexible and independent ADC trigger sources
  - Dedicated Result register for each analog channel

Timers/Output Compare/Input Capture

- Two 16-Bit General Purpose Timers/Counters
- Input Capture module
- Output Compare module
- Peripheral Pin Select (PPS) to allow Function Remap

Communication Interfaces

- UART module (10 Mbps):
  - With support for LIN/J2602 protocols and IrDA®
- 4-Wire SPI module
- I^2C™ module (up to 1 Mbaud) with SMBus Support
- PPS to allow Function Remap

Input/Output

- Constant Current Source:
  - Constant current generator (10 µA nominal)
- Sink/Source 18 mA on 8 Pins and 6 mA on 13 Pins
- 5V Tolerant Pins
- Selectable Open-Drain and Pull-ups
- External Interrupts on 16 I/O Pins

Qualification and Class B Support

- AEC-Q100 REVG (Grade 1, -40ºC to +125ºC) Planned
- Class B Safety Library, IEC 60730

Debugger Development Support

- In-Circuit and In-Application Programming
- Two Breakpoints
- IEEE 1149.2 Compatible (JTAG) Boundary Scan
- Trace and Run-Time Watch

© 2011-2012 Microchip Technology Inc.

dsPIC33FJ06GS001/101A/102A/202A and dsPIC33FJ09GS302 PRODUCT FAMILIES

The device names, pin counts, memory sizes and peripheral availability of each device are listed in Table 1. The following pages show their pinout diagrams.

TABLE 1: dsPIC33FJ06GS001/101A/102A/202A and dsPIC33FJ09GS302 PRODUCT FAMILIES

Device	Pins	Program Flash Memory (Kbytes)	RAM (Bytes)	Remappable Peripherals									DAC Output	Constant Current Source	Reference Clock	I²C™	ADC			I/O Pins	Packages
				Remappable Pins	16-Bit Timer	Input Capture	Output Compare	UART	SPI	PWM(2)	Analog Comparator	External Interrupts(1)					SARs	Sample-and-Hold (S&H) Circuit	Analog-to-Digital Inputs		
dsPIC33FJ06GS001	18	6	256	8	2	0	0	0	0	2x2	2	3	0	0	0	1	1	2	6	13	PDIP, SOIC
	20																				SSOP
dsPIC33FJ06GS101A	18	6	256	8	2	0	1	1	1	2x2	0	3	0	0	1	1	1	3	6	13	PDIP, SOIC
	20																				SSOP
dsPIC33FJ06GS102A	28	6	256	16	2	0	1	1	1	2x2	0	3	0	0	1	1	1	3	6	21	SPDIP, SOIC, SSOP, QFN-S
	36																				VTLA
dsPIC33FJ06GS202A	28	6	1K	16	2	1	1	1	1	2x2	2	3	1	0	1	1	1	3	6	21	SPDIP, SOIC, SSOP, QFN-S
	36																				VTLA
dsPIC33FJ09GS302	28	9	1K	16	2	1	1	1	1	3x2	2	3	1	1	1	1	1	3	8	21	SPDIP, SOIC, SSOP, QFN-S
	36																				VTLA

Note 1: INT0 is not remappable.

2: The PWM4 pair is remappable and only available on dsPIC33FJ06GS001/101A and dsPIC33FJ09GS302 devices.

© 2011-2012 Microchip Technology Inc.

Pin Diagrams

18-Pin SOIC, PDIP

■ = Pins are up to 5V tolerant

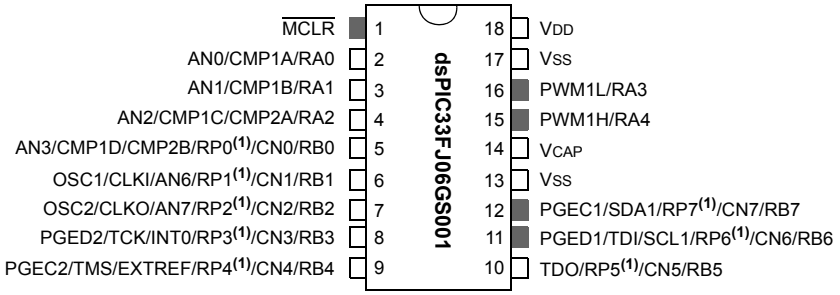

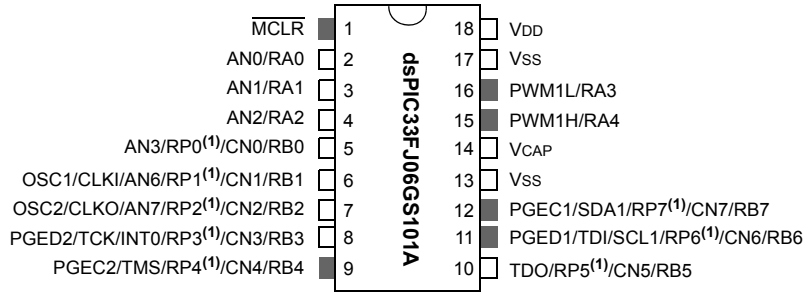

20-Pin SSOP

■ = Pins are up to 5V tolerant

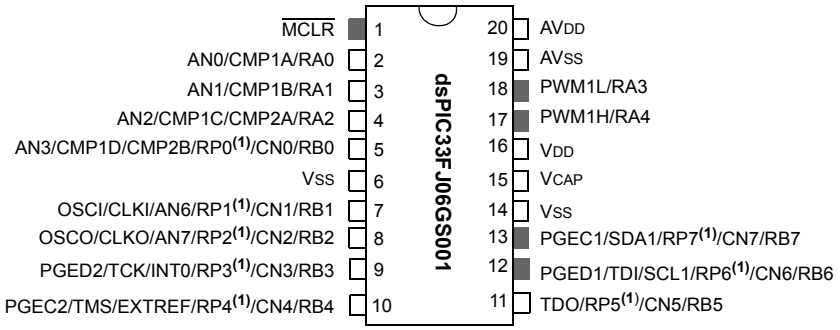

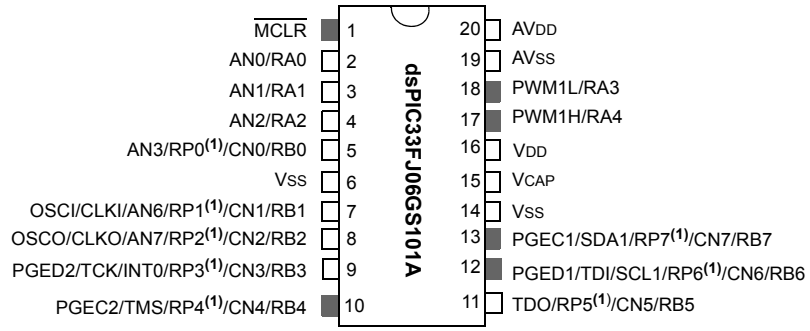

Note 1: The RPn pins can be used by any remappable peripheral. See **Table 1** for the list of available peripherals.

Pin Diagrams (Continued)

28-Pin SOIC, SPDIP, SSOP

■ = Pins are up to 5V tolerant

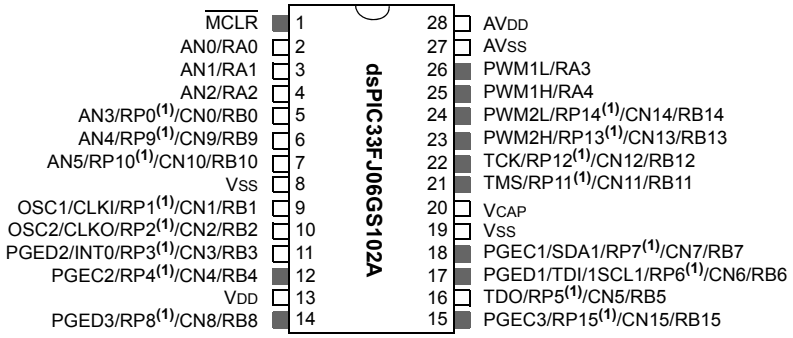

28-Pin SPDIP, SOIC, SSOP

■ = Pins are up to 5V tolerant

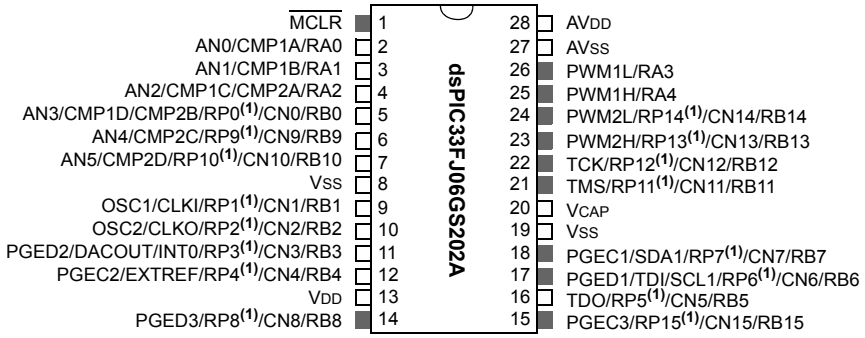

28-Pin SPDIP, SOIC, SSOP

■ = Pins are up to 5V tolerant

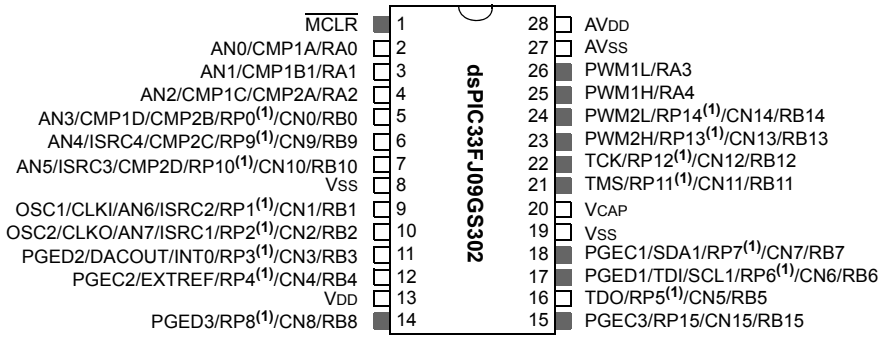

Note 1: The RPn pins can be used by any remappable peripheral. See **Table 1** for the list of available peripherals.

© 2011-2012 Microchip Technology Inc.

Pin Diagrams (Continued)

28-Pin QFN-S(2)

■ = Pins are up to 5V tolerant

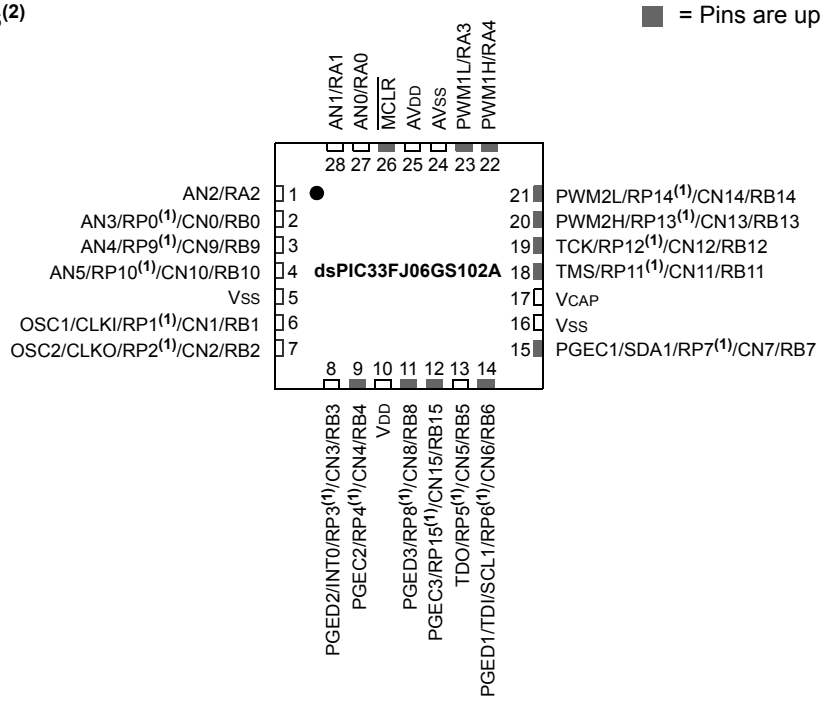

28-Pin QFN-S(2)

■ = Pins are up to 5V tolerant

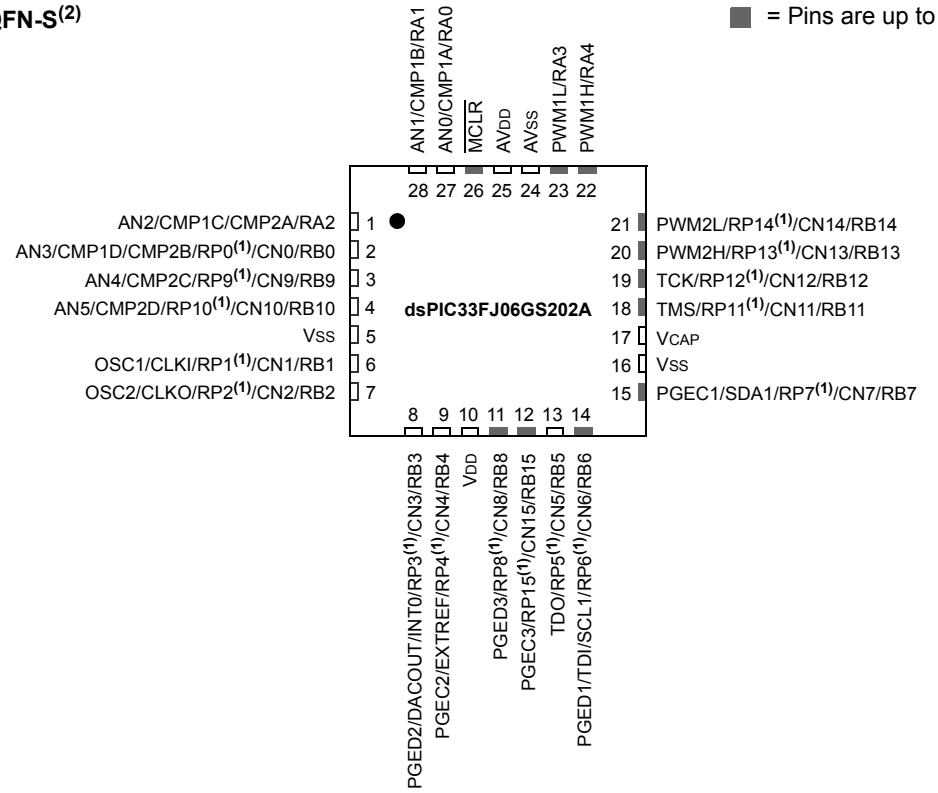

Note 1: The RPn pins can be used by any remappable peripheral. See **Table 1** for the list of available peripherals.

2: The metal plane at the bottom of the device is not connected to any pins and is recommended to be connected to VSS externally.

Pin Diagrams (Continued)

28-Pin QFN-S(2)

■ = Pins are up to 5V tolerant

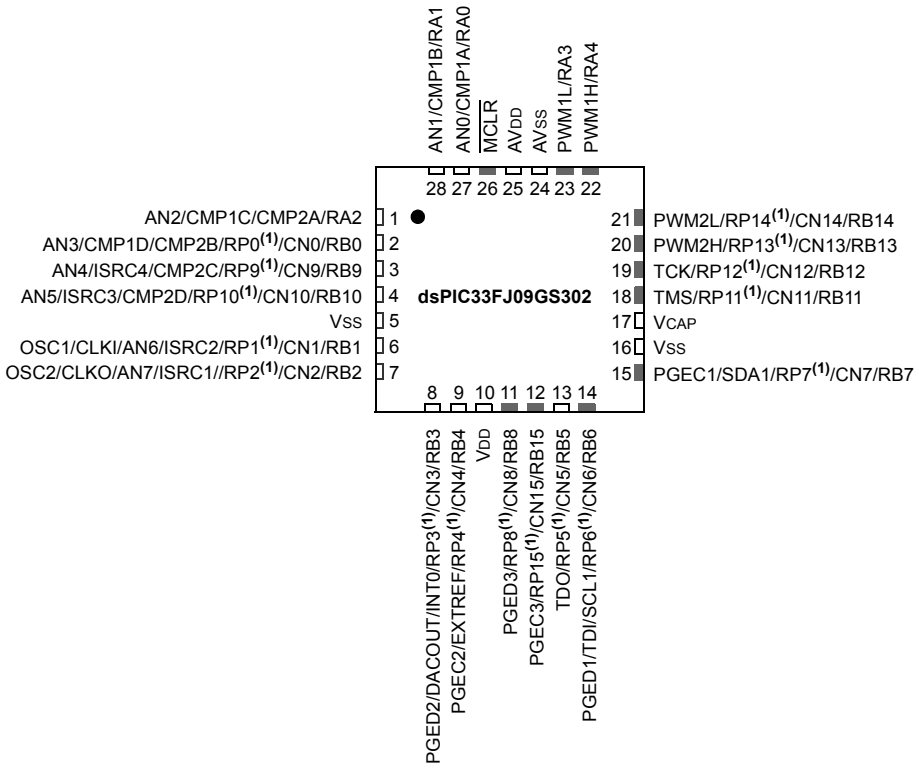

Note 1: The RPn pins can be used by any remappable peripheral. See **Table 1** for the list of available peripherals.

2: The metal plane at the bottom of the device is not connected to any pins and is recommended to be connected to VSS externally.

© 2011-2012 Microchip Technology Inc.

Pin Diagrams (Continued)

36-Pin VTLA

■ = Pins are up to 5V tolerant

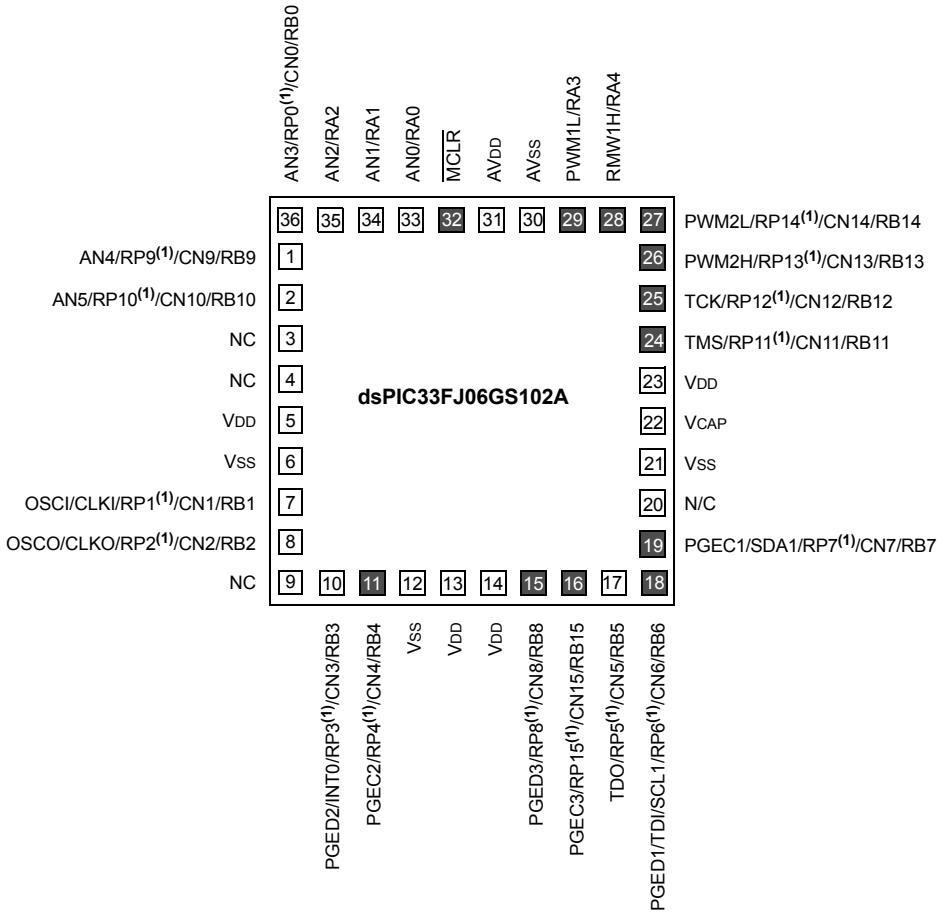

Note 1: The RPn pins can be used by any remappable peripheral. See **Table 1** for the list of available peripherals.

2: The metal pad at the bottom of the device is not connected to any pins and is recommended to be connected to VSS externally.

Pin Diagrams (Continued)

36-Pin VTLA

■ = Pins are up to 5V tolerant

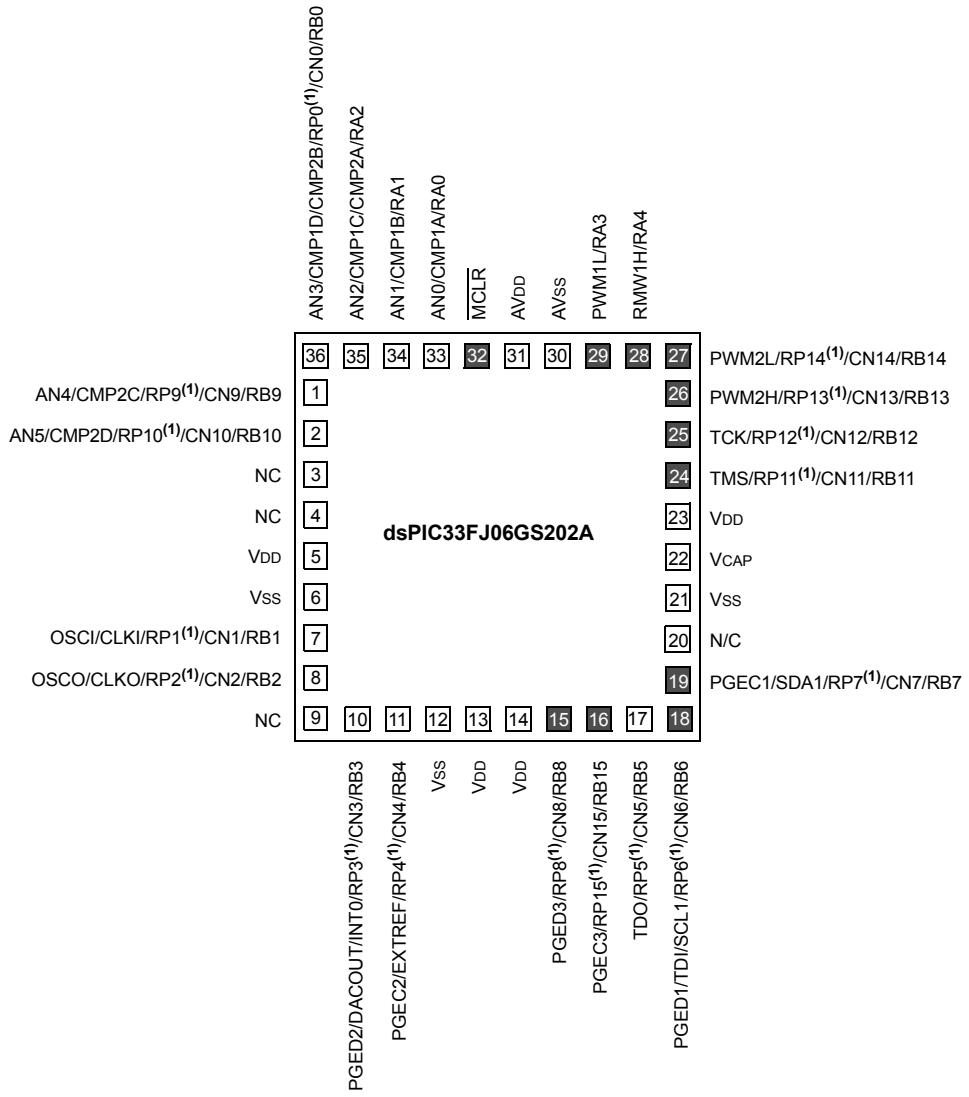

Note 1: The RPn pins can be used by any remappable peripheral. See **Table 1** for the list of available peripherals.

2: The metal pad at the bottom of the device is not connected to any pins and is recommended to be connected to VSS externally.

© 2011-2012 Microchip Technology Inc.

Pin Diagrams (Continued)

36-Pin VTLA

■ = Pins are up to 5V tolerant

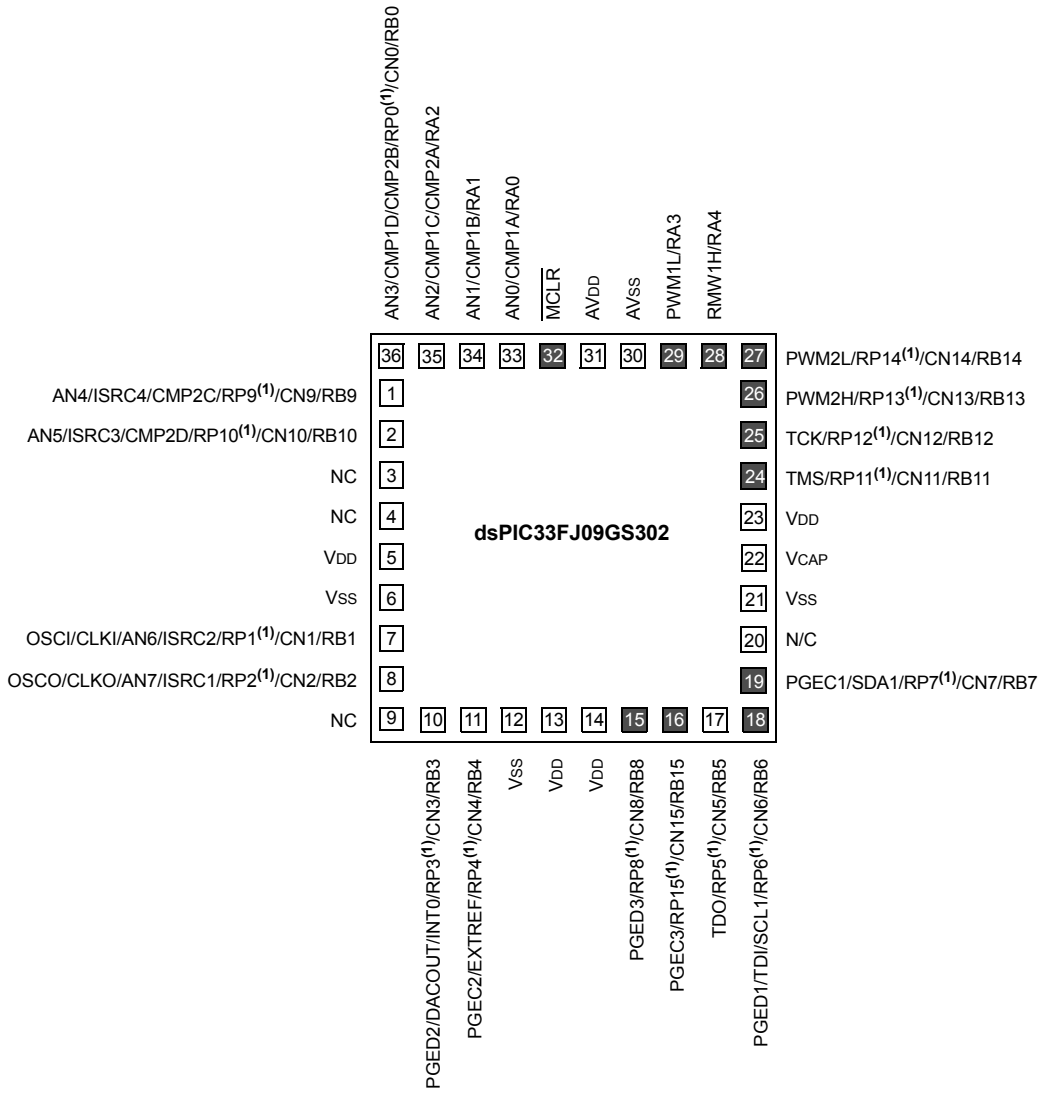

Note 1: The RPn pins can be used by any remappable peripheral. See **Table 1** for the list of available peripherals.

2: The metal pad at the bottom of the device is not connected to any pins and is recommended to be connected to VSS externally.

Table of Contents

1.0 Device Overview 13
2.0 Guidelines for Getting Started with 16-Bit Digital Signal Controllers 17
3.0 CPU 25
4.0 Memory Organization 37
5.0 Flash Program Memory 75
6.0 Resets 79
7.0 Interrupt Controller 87
8.0 Oscillator Configuration 123
9.0 Power-Saving Features 137
10.0 I/O Ports 145
11.0 Timer1 173
12.0 Timer2 Features 175
13.0 Input Capture 177
14.0 Output Compare 179
15.0 High-Speed PWM 183
16.0 Serial Peripheral Interface (SPI) 205
17.0 Inter-Integrated Circuit™ (I^2C™) 211
18.0 Universal Asynchronous Receiver Transmitter (UART) 219
19.0 High-Speed 10-Bit Analog-to-Digital Converter (ADC) 225
20.0 High-Speed Analog Comparator 243
21.0 Constant Current Source 249
22.0 Special Features 251
23.0 Instruction Set Summary 259
24.0 Development Support 267
25.0 Electrical Characteristics 271
26.0 DC and AC Device Characteristics Graphs 315
27.0 Packaging Information 319
Appendix A: Revision History 339
Index 341

© 2011-2012 Microchip Technology Inc.

TO OUR VALUED CUSTOMERS

It is our intention to provide our valued customers with the best documentation possible to ensure successful use of your Microchip products. To this end, we will continue to improve our publications to better suit your needs. Our publications will be refined and enhanced as new volumes and updates are introduced.

If you have any questions or comments regarding this publication, please contact the Marketing Communications Department via E-mail at **docerrors@microchip.com** or fax the **Reader Response Form** in the back of this data sheet to (480) 792-4150. We welcome your feedback.

Most Current Data Sheet

To obtain the most up-to-date version of this data sheet, please register at our Worldwide Web site at:

http://www.microchip.com

You can determine the version of a data sheet by examining its literature number found on the bottom outside corner of any page. The last character of the literature number is the version number, (e.g., DS30000A is version A of document DS30000).

Errata

An errata sheet, describing minor operational differences from the data sheet and recommended workarounds, may exist for current devices. As device/documentation issues become known to us, we will publish an errata sheet. The errata will specify the revision of silicon and revision of document to which it applies.

To determine if an errata sheet exists for a particular device, please check with one of the following:

- Microchip's Worldwide Web site; **http://www.microchip.com**
- Your local Microchip sales office (see last page)

When contacting a sales office, please specify which device, revision of silicon and data sheet (include literature number) you are using.

Customer Notification System

Register on our web site at **www.microchip.com** to receive the most current information on all of our products.

Referenced Sources

This device data sheet is based on the following individual chapters of the *"dsPIC33F/PIC24H Family Reference Manual"*. These documents should be considered the primary reference for the operation of a particular module or device feature.

Note: To access the documents listed below, visit the Microchip web site (www.microchip.com).

- **Section 1. "Introduction"** (DS70197)
- **Section 2. "CPU"** (DS70204)
- **Section 3. "Data Memory"** (DS70202)
- **Section 4. "Program Memory"** (DS70203)
- **Section 5. "Flash Programming"** (DS70191)
- **Section 8. "Reset"** (DS70192)
- **Section 9. "Watchdog Timer (WDT) and Power-Saving Modes"** (DS70196)
- **Section 10. "I/O Ports"** (DS70193)
- **Section 11. "Timers"** (DS70205)
- **Section 12. "Input Capture"** (DS70198)
- **Section 13. "Output Compare"** (DS70209)
- **Section 17. "UART"** (DS70188)
- **Section 18. "Serial Peripheral Interface (SPI)"** (DS70206)
- **Section 19. "Inter-Integrated Circuit™ (I^2C™)"** (DS70195)
- **Section 24. "Programming and Diagnostics"** (DS70207)
- **Section 25. "Device Configuration"** (DS70194)
- **Section 41. "Interrupts (Part IV)"** (DS70300)
- **Section 42. "Oscillator (Part IV)"** (DS70307)
- **Section 43. "High-Speed PWM"** (DS70323)
- **Section 44. "High-Speed 10-Bit ADC"** (DS70321)
- **Section 45. "High-Speed Analog Comparator"** (DS70296)

© 2011-2012 Microchip Technology Inc.

1.0 DEVICE OVERVIEW

Note: This data sheet summarizes the features of the dsPIC33FJ06GS001/101A/102A/202A and dsPIC33FJ09GS302 families of devices. It is not intended to be a comprehensive reference source. To complement the information in this data sheet, refer to the *"dsPIC33F/PIC24H Family Reference Manual"*. Please see the Microchip web site (www.microchip.com) for the latest *"dsPIC33F/PIC24H Family Reference Manual"* sections.

This document contains device-specific information for the following dsPIC33F Digital Signal Controller (DSC) devices:

- dsPIC33FJ06GS001
- dsPIC33FJ06GS101A
- dsPIC33FJ06GS102A
- dsPIC33FJ06GS202A
- dsPIC33FJ09GS302

The dsPIC33FJ06GS001/101A/102A/202A and dsPIC33FJ09GS302 devices contain extensive Digital Signal Processor (DSP) functionality with a high-performance, 16-bit microcontroller (MCU) architecture.

Figure 1-1 shows a general block diagram of the core and peripheral modules in the devices. Table 1-1 lists the functions of the various pins shown in the pinout diagrams.

FIGURE 1-1: dsPIC33FJ06GS001/101A/102A/202A and dsPIC33FJ09GS302 BLOCK DIAGRAM

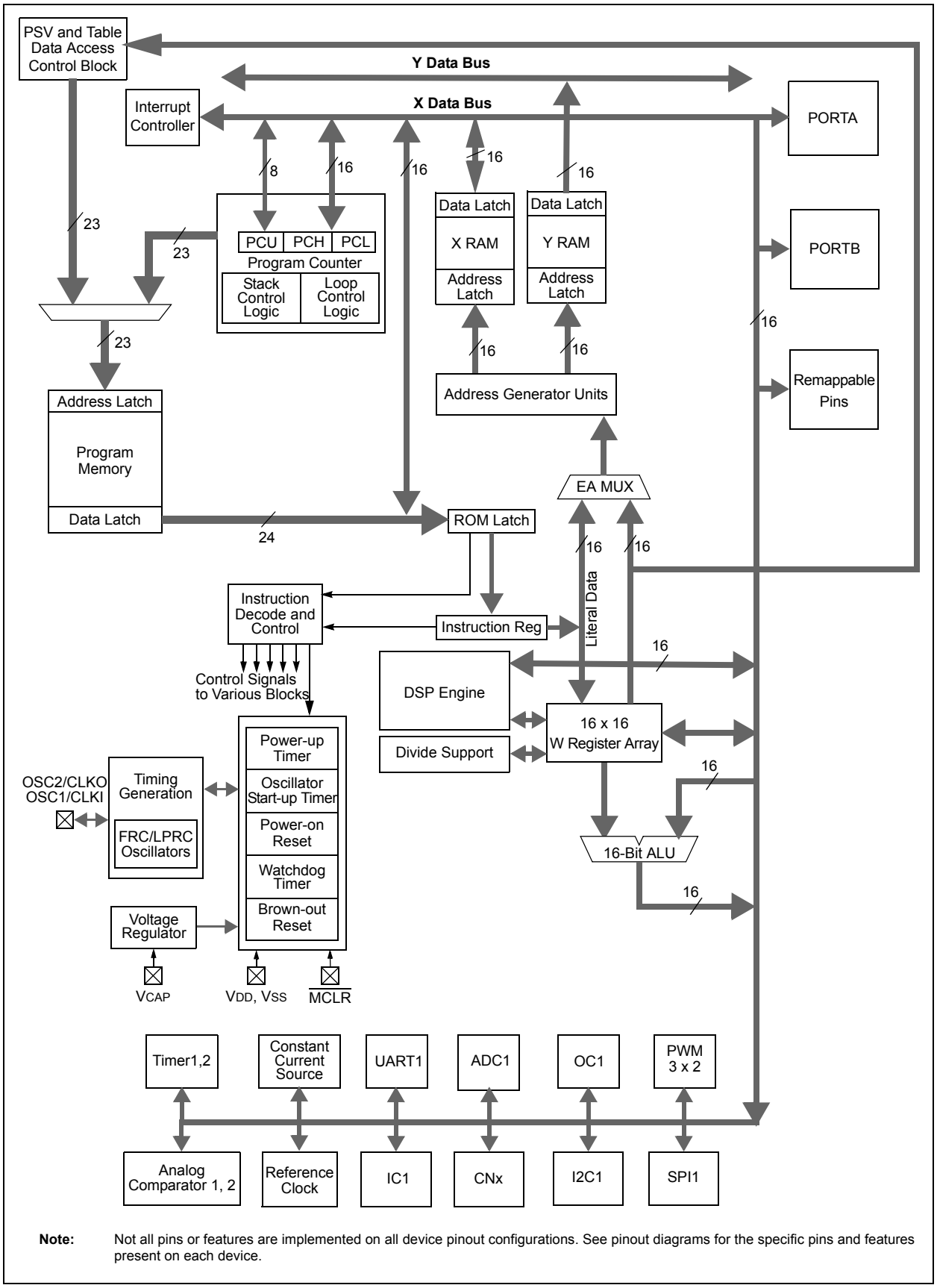

Note: Not all pins or features are implemented on all device pinout configurations. See pinout diagrams for the specific pins and features present on each device.

© 2011-2012 Microchip Technology Inc.

TABLE 1-1: PINOUT I/O DESCRIPTIONS

Pin Name	Pin Type	Buffer Type	PPS Capable	Description
AN0-AN7	I	Analog	No	Analog input channels.
CLKI	I	ST/CMOS	No	External clock source input. Always associated with OSC1 pin function.
CLKO	O	—	No	Oscillator crystal output. Connects to crystal or resonator in Crystal Oscillator mode. Optionally functions as CLKO in RC and EC modes. Always associated with OSC2 pin function.
OSC1	I	ST/CMOS	No	Oscillator crystal input. ST buffer when configured in RC mode; CMOS otherwise.
OSC2	I/O	—	No	Oscillator crystal output. Connects to crystal or resonator in Crystal Oscillator mode. Optionally functions as CLKO in RC and EC modes.
CN0-CN15	I	ST	No	Change notification inputs. Can be software programmed for internal weak pull-ups on all inputs.
IC1	I	ST	Yes	Capture Input 1.
OCFA	I	ST	Yes	Compare Fault A input (for Compare Channel 1).
OC1	O	—	Yes	Compare Output 1.
INT0	I	ST	No	External Interrupt 0.
INT1	I	ST	Yes	External Interrupt 1.
INT2	I	ST	Yes	External Interrupt 2.
RA0-RA4	I/O	ST	No	PORTA is a bidirectional I/O port.
RB0-RB15(1)	I/O	ST	No	PORTB is a bidirectional I/O port.
RP0-RP15(1)	I/O	ST	No	Remappable I/O pins.
T1CK	I	ST	Yes	Timer1 external clock input.
T2CK	I	ST	Yes	Timer2 external clock input.
$\overline{\text{U1CTS}}$	I	ST	Yes	UART1 Clear-to-Send.
$\overline{\text{U1RTS}}$	O	—	Yes	UART1 Ready-to-Send.
U1RX	I	ST	Yes	UART1 receive.
U1TX	O	—	Yes	UART1 transmit.
SCK1	I/O	ST	Yes	Synchronous serial clock input/output for SPI1.
SDI1	I	ST	Yes	SPI1 data in.
SDO1	O	—	Yes	SPI1 data out.
$\overline{\text{SS1}}$	I/O	ST	Yes	SPI1 slave synchronization or frame pulse I/O.
SCL1	I/O	ST	No	Synchronous serial clock input/output for I2C1.
SDA1	I/O	ST	No	Synchronous serial data input/output for I2C1.
TMS	I	TTL	No	JTAG Test mode select pin.
TCK	I	TTL	No	JTAG test clock input pin.
TDI	I	TTL	No	JTAG test data input pin.
TDO	O	—	No	JTAG test data output pin.

Legend: CMOS = CMOS compatible input or output; ST = Schmitt Trigger input with CMOS levels; TTL = Transistor-Transistor Logic; Analog = Analog input; P = Power; PPS = Peripheral Pin Select; I = Input; O = Output; — = Does not apply

Note 1: Not all pins are available on all devices. Refer to the specific device in the **"Pin Diagrams"** section for availability.

2: This pin is available on dsPIC33FJ09GS302 devices only.

TABLE 1-1: PINOUT I/O DESCRIPTIONS (CONTINUED)

Pin Name	Pin Type	Buffer Type	PPS Capable	Description
CMP1A	I	Analog	No	Comparator 1 Channel A.
CMP1B	I	Analog	No	Comparator 1 Channel B.
CMP1C	I	Analog	No	Comparator 1 Channel C.
CMP1D	I	Analog	No	Comparator 1 Channel D.
CMP2A	I	Analog	No	Comparator 2 Channel A.
CMP2B	I	Analog	No	Comparator 2 Channel B.
CMP2C	I	Analog	No	Comparator 2 Channel C.
CMP2D	I	Analog	No	Comparator 2 Channel D.
DACOUT	O	—	No	DAC output voltage.
ACMP1-ACMP2	O	—	Yes	DAC trigger to PWM module.
ISRC1(2)	O	—	No	Constant Current Source Output 1.
ISRC2(2)	O	—	No	Constant Current Source Output 2.
ISRC3(2)	O	—	No	Constant Current Source Output 3.
ISRC4(2)	O	—	No	Constant Current Source Output 4.
EXTREF	I	Analog	No	External voltage reference input for the reference DACs.
REFCLKO	O	—	Yes	REFCLKO output signal is a postscaled derivative of the system clock.
FLT1-FLT8	I	ST	Yes	Fault inputs to PWM module.
SYNCI1-SYNCI2	I	ST	Yes	External synchronization signal to PWM master time base.
SYNCO1	O	—	Yes	PWM master time base for external device synchronization.
PWM1L	O	—	No	PWM1 low output.
PWM1H	O	—	No	PWM1 high output.
PWM2L	O	—	No	PWM2 low output.
PWM2H	O	—	No	PWM2 high output.
PWM4L	O	—	Yes	PWM4 low output.
PWM4H	O	—	Yes	PWM4 high output.
PGED1	I/O	ST	No	Data I/O pin for programming/debugging Communication Channel 1.
PGEC1	I	ST	No	Clock input pin for programming/debugging Communication Channel 1.
PGED2	I/O	ST	No	Data I/O pin for programming/debugging Communication Channel 2.
PGEC2	I	ST	No	Clock input pin for programming/debugging Communication Channel 2.
PGED3(1)	I/O	ST	No	Data I/O pin for programming/debugging Communication Channel 3.
PGEC3(1)	I	ST	No	Clock input pin for programming/debugging Communication Channel 3.
$\overline{MCLR}$	I/P	ST	No	Master Clear (Reset) input. This pin is an active-low Reset to the device.
AVDD	P	P	No	Positive supply for analog modules. This pin must be connected at all times. AVDD is connected to VDD on 18 and 28-pin devices.
AVSS	P	P	No	Ground reference for analog modules. AVSS is connected to VSS on 18 and 28-pin devices.
VDD	P	—	No	Positive supply for peripheral logic and I/O pins.
VCAP	P	—	No	CPU logic filter capacitor connection.
VSS	P	—	No	Ground reference for logic and I/O pins.

Legend: CMOS = CMOS compatible input or output; Analog = Analog input; I = Input; ST = Schmitt Trigger input with CMOS levels; P = Power; O = Output; TTL = Transistor-Transistor Logic; PPS = Peripheral Pin Select; — = Does not apply

Note 1: Not all pins are available on all devices. Refer to the specific device in the **"Pin Diagrams"** section for availability.

2: This pin is available on dsPIC33FJ09GS302 devices only.

© 2011-2012 Microchip Technology Inc.

2.0 GUIDELINES FOR GETTING STARTED WITH 16-BIT DIGITAL SIGNAL CONTROLLERS

Note 1: This data sheet summarizes the features of the dsPIC33FJ06GS001/101A/102A/202A and dsPIC33FJ09GS302 family of devices. It is not intended to be a comprehensive reference source. To complement the information in this data sheet, refer to the "*dsPIC33F/PIC24H Family Reference Manual*", which is available from the Microchip web site (www.microchip.com).

2: Some registers and associated bits described in this section may not be available on all devices. Refer to **Section 4.0 "Memory Organization"** in this data sheet for device-specific register and bit information.

2.1 Basic Connection Requirements

Getting started with the dsPIC33FJ06GS001/101A/102A/202A and dsPIC33FJ09GS302 family of 16-bit Digital Signal Controllers (DSCs) requires attention to a minimal set of device pin connections before proceeding with development. The following is a list of pin names which must always be connected:

- All VDD and VSS pins
  (see **Section 2.2 "Decoupling Capacitors"**)
- All AVDD and AVSS pins, regardless if ADC module is not used
  (see **Section 2.2 "Decoupling Capacitors"**)
- VCAP
  (see **Section 2.3 "Capacitor on Internal Voltage Regulator (VCAP)"**)
- $\overline{\text{MCLR}}$ pin
  (see **Section 2.4 "Master Clear (MCLR) Pin"**)
- PGECx/PGEDx pins used for In-Circuit Serial Programming™ (ICSP™) and debugging purposes
  (see **Section 2.5 "ICSP™ Pins"**)
- OSC1 and OSC2 pins when external oscillator source is used
  (see **Section 2.6 "External Oscillator Pins"**)

2.2 Decoupling Capacitors

The use of decoupling capacitors on every pair of power supply pins, such as VDD, VSS, AVDD and AVSS, is required.

Consider the following criteria when using decoupling capacitors:

- **Value and type of capacitor:** Recommendation of 0.1 µF (100 nF), 10-20V. This capacitor should be a low-ESR and have resonance frequency in the range of 20 MHz and higher. It is recommended that ceramic capacitors be used.
- **Placement on the printed circuit board:** The decoupling capacitors should be placed as close to the pins as possible. It is recommended to place the capacitors on the same side of the board as the device. If space is constricted, the capacitor can be placed on another layer on the PCB using a via; however, ensure that the trace length from the pin to the capacitor is within one-quarter inch (6 mm) in length.
- **Handling high-frequency noise:** If the board is experiencing high-frequency noise, upward of tens of MHz, add a second ceramic type capacitor in parallel to the above described decoupling capacitor. The value of the second capacitor can be in the range of 0.01 µF to 0.001 µF. Place this second capacitor next to the primary decoupling capacitor. In high-speed circuit designs, consider implementing a decade pair of capacitances as close to the power and ground pins as possible; for example, 0.1 µF in parallel with 0.001 µF.
- **Maximizing performance:** On the board layout from the power supply circuit, run the power and return traces to the decoupling capacitors first, and then to the device pins. This ensures that the decoupling capacitors are first in the power chain. Equally important is to keep the trace length between the capacitor and the power pins to a minimum, thereby reducing PCB track inductance.

© 2011-2012 Microchip Technology Inc.

FIGURE 2-1: RECOMMENDED MINIMUM CONNECTION

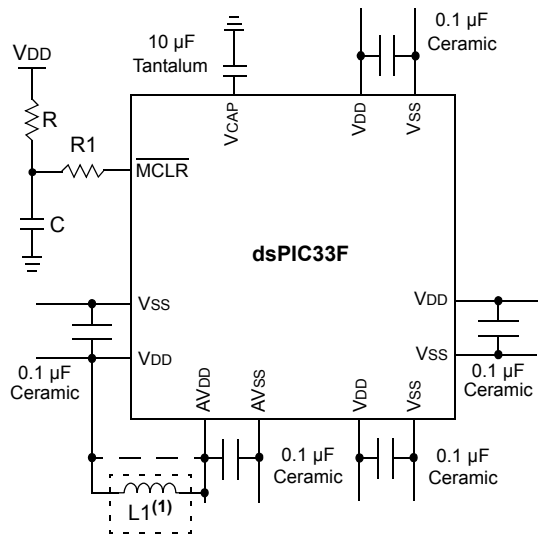

Note 1: As an option, instead of a hard-wired connection, an inductor (L1) can be substituted between VDD and AVDD to improve ADC noise rejection. The inductor impedance should be less than 1Ω and the inductor capacity greater than 10 mA.

Where:

$$f = \frac{F_{CNV}}{2} \quad \text{(i.e., ADC conversion rate/2)}$$

$$f = \frac{1}{(2\pi\sqrt{LC})}$$

$$L = \left(\frac{1}{(2\pi f\sqrt{C})}\right)^2$$

2.2.1 TANK CAPACITORS

On boards with power traces running longer than six inches in length, it is suggested to use a tank capacitor for integrated circuits including DSCs to supply a local power source. The value of the tank capacitor should be determined based on the trace resistance that connects the power supply source to the device, and the maximum current drawn by the device in the application. In other words, select the tank capacitor so that it meets the acceptable voltage sag at the device; typical values range from 4.7 µF to 47 µF.

2.3 Capacitor on Internal Voltage Regulator (VCAP)

A low-ESR (<0.5 Ohms) capacitor is required on the VCAP pin, which is used to stabilize the voltage regulator output voltage. The VCAP pin must not be connected to VDD, and must have a capacitor between 4.7 µF and 10 µF, 16V connected to ground. The type can be ceramic or tantalum. Refer to **Section 25.0 "Electrical Characteristics"** for additional information.

The placement of this capacitor should be close to the VCAP. It is recommended that the trace length not exceed one-quarter inch (6 mm). Refer to **Section 22.2 "On-Chip Voltage Regulator"** for details.

2.4 Master Clear ($\overline{\text{MCLR}}$) Pin

The $\overline{\text{MCLR}}$ pin provides for two specific device functions:

- Device Reset
- Device Programming and Debugging

During device programming and debugging, the resistance and capacitance that can be added to the pin must be considered. Device programmers and debuggers drive the $\overline{\text{MCLR}}$ pin. Consequently, specific voltage levels (VIH and VIL) and fast signal transitions must not be adversely affected. Therefore, specific values of R and C will need to be adjusted based on the application and PCB requirements.

For example, as shown in Figure 2-2, it is recommended that the capacitor, C, be isolated from the $\overline{\text{MCLR}}$ pin during programming and debugging operations.

Place the components shown in Figure 2-2 within one-quarter inch (6 mm) from the $\overline{\text{MCLR}}$ pin.

FIGURE 2-2: EXAMPLE OF $\overline{\text{MCLR}}$ PIN CONNECTIONS

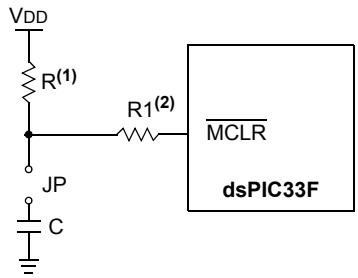

Note 1: R ≤ 10 kΩ is recommended. A suggested starting value is 10 kΩ. Ensure that the $\overline{\text{MCLR}}$ pin VIH and VIL specifications are met.

2: R1 ≤ 470Ω will limit any current flowing into $\overline{\text{MCLR}}$ from the external capacitor, C, in the event of $\overline{\text{MCLR}}$ pin breakdown due to Electrostatic Discharge (ESD) or Electrical Overstress (EOS). Ensure that the $\overline{\text{MCLR}}$ pin VIH and VIL specifications are met.

© 2011-2012 Microchip Technology Inc.

2.5 ICSP™ Pins

The PGECx and PGEDx pins are used for In-Circuit Serial Programming™ (ICSP™) and debugging purposes. It is recommended to keep the trace length between the ICSP connector and the ICSP pins on the device as short as possible. If the ICSP connector is expected to experience an ESD event, a series resistor is recommended, with the value in the range of a few tens of Ohms, not to exceed 100 Ohms.

Pull-up resistors, series diodes, and capacitors on the PGECx and PGEDx pins, are not recommended as they will interfere with the programmer/debugger communications to the device. If such discrete components are an application requirement, they should be removed from the circuit during programming and debugging. Alternatively, refer to the AC/DC characteristics and timing requirements information in the respective device Flash programming specification for information on capacitive loading limits, and Input Voltage High (V_{IH}) and Input Voltage Low (V_{IL}) pin requirements.

Ensure that the "Communication Channel Select" (i.e., PGECx/PGEDx pins), programmed into the device matches the physical connections for the ICSP to MPLAB® ICD 3 or MPLAB REAL ICE™.

For more information on MPLAB ICD 3 and REAL ICE connection requirements, refer to the following documents that are available on the Microchip web site (**www.microchip.com**):

- *"Using MPLAB® ICD 3"* (poster) (DS51765)
- *"Multi-Tool Design Advisory"* (DS51764)
- *"MPLAB® REAL ICE™ In-Circuit Emulator User's Guide"* (DS51616)
- *"Using MPLAB® REAL ICE™"* (poster) (DS51749)

2.6 External Oscillator Pins

Many DSCs have options for at least two oscillators: a high-frequency primary oscillator and a low-frequency secondary oscillator (refer to **Section 8.0 "Oscillator Configuration"** for details).

The oscillator circuit should be placed on the same side of the board as the device. Also, place the oscillator circuit close to the respective oscillator pins, not exceeding one-half inch (12 mm) distance between them. The load capacitors should be placed next to the oscillator itself, on the same side of the board. Use a grounded copper pour around the oscillator circuit to isolate them from surrounding circuits. The grounded copper pour should be routed directly to the MCU ground. Do not run any signal traces or power traces inside the ground pour. Also, if using a two-sided board, avoid any traces on the other side of the board where the crystal is placed. A suggested layout is shown in Figure 2-3.

FIGURE 2-3: SUGGESTED PLACEMENT OF THE OSCILLATOR CIRCUIT

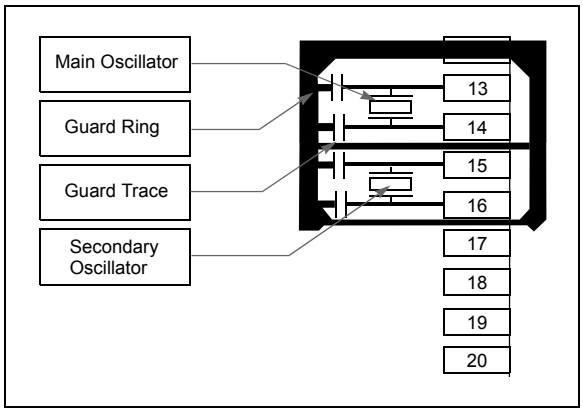

2.7 Oscillator Value Conditions on Device Start-up

If the PLL of the target device is enabled and configured for the device start-up oscillator, the maximum oscillator source frequency must be limited to 4 MHz < F_{IN} < 8 MHz to comply with device PLL start-up conditions. This means that if the external oscillator frequency is outside of this range, the application must start up in the FRC mode first. The default PLL settings after a POR, with an oscillator frequency outside of this range, will violate the device operating speed.

Once the device powers up, the application firmware can initialize the PLL SFRs, CLKDIV and PLLDBF to a suitable value, and then perform a clock switch to the Oscillator + PLL clock source. Note that clock switching must be enabled in the device Configuration Word.

2.8 Configuration of Analog and Digital Pins During ICSP Operations

If MPLAB ICD 3 or REAL ICE is selected as a debugger, it automatically initializes all of the Analog-to-Digital input pins (ANx) as “digital” pins, by setting all bits in the ADPCFG register.

The bits in the registers that correspond to the Analog-to-Digital pins that are initialized by MPLAB ICD 3 or REAL ICE, must not be cleared by the user application firmware; otherwise, communication errors will result between the debugger and the device.

If your application needs to use certain Analog-to-Digital pins as analog input pins during the debug session, the user application must clear the corresponding bits in the ADPCFG register during initialization of the ADC module.

When MPLAB ICD 3 or REAL ICE is used as a programmer, the user application firmware must correctly configure the ADPCFG register. Automatic initialization of these registers is only done during debugger operation. Failure to correctly configure the register(s) will result in all Analog-to-Digital pins being recognized as analog input pins, resulting in the port value being read as a logic ‘0’, which may affect user application functionality.

2.9 Unused I/Os

Unused I/O pins should be configured as outputs and driven to a logic low state.

Alternatively, connect a 1k to 10k resistor between V_{SS} and unused pins, and drive the output to logic low.

2.10 Typical Application Connection Examples

Examples of typical application connections are shown in Figure 2-4 through Figure 2-8.

© 2011-2012 Microchip Technology Inc.

FIGURE 2-4: DIGITAL PFC

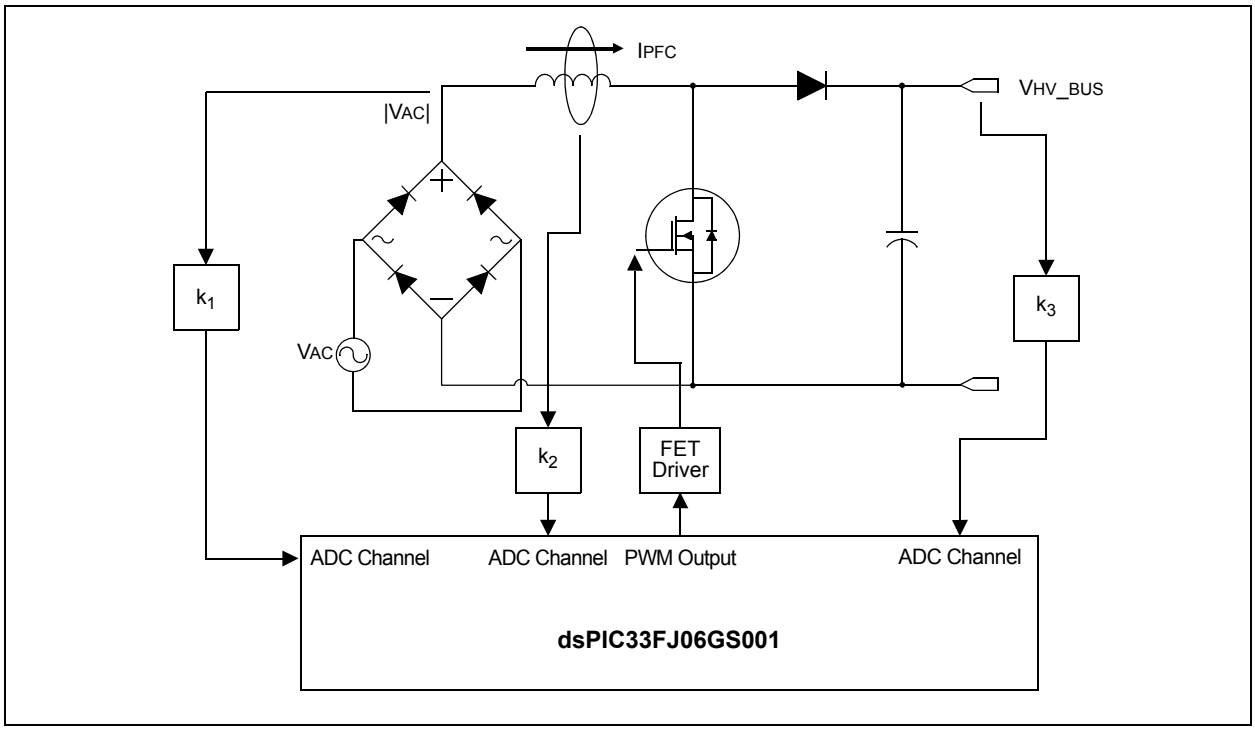

FIGURE 2-5: BOOST CONVERTER IMPLEMENTATION

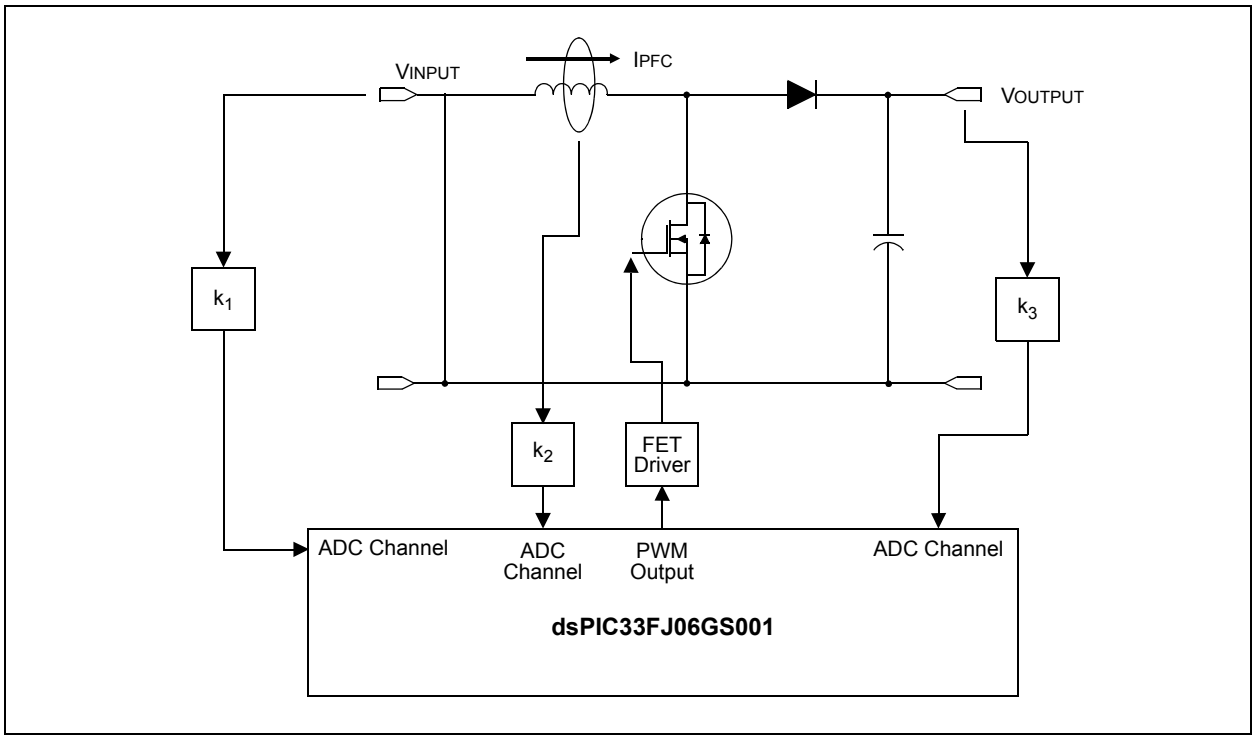

FIGURE 2-6: SINGLE-PHASE SYNCHRONOUS BUCK CONVERTER

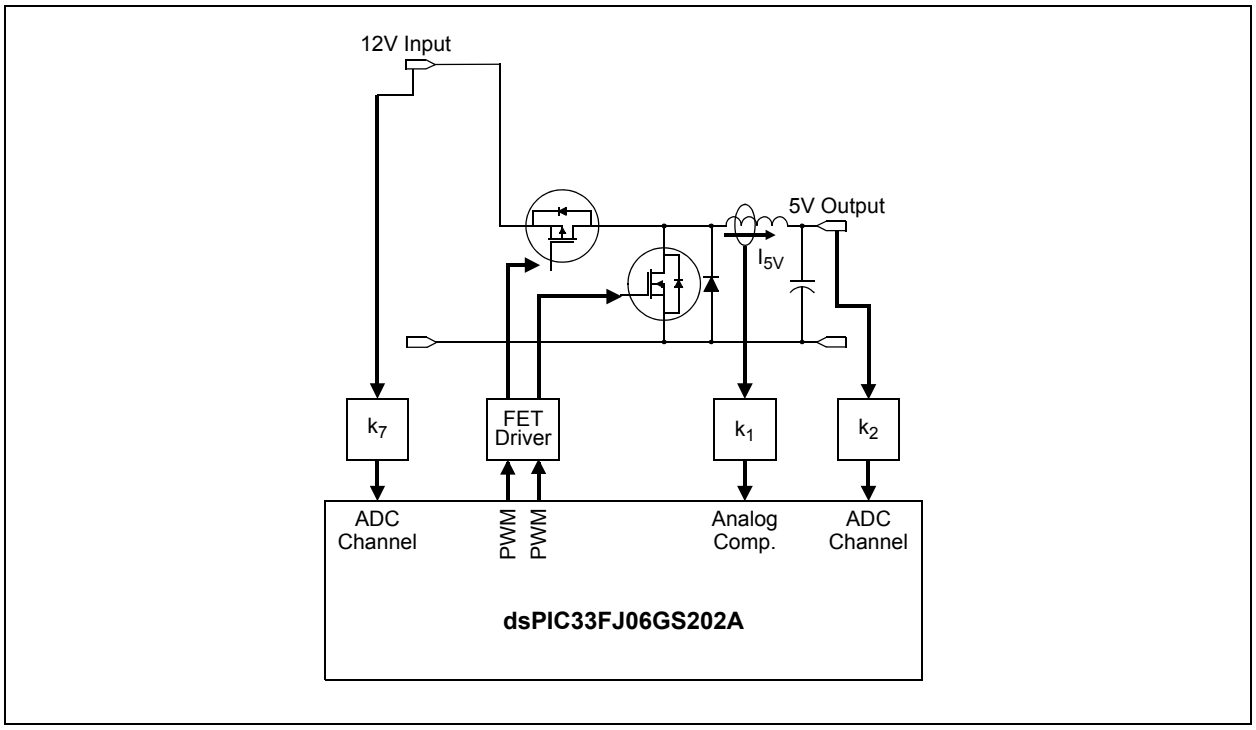

FIGURE 2-7: INTERLEAVED PFC

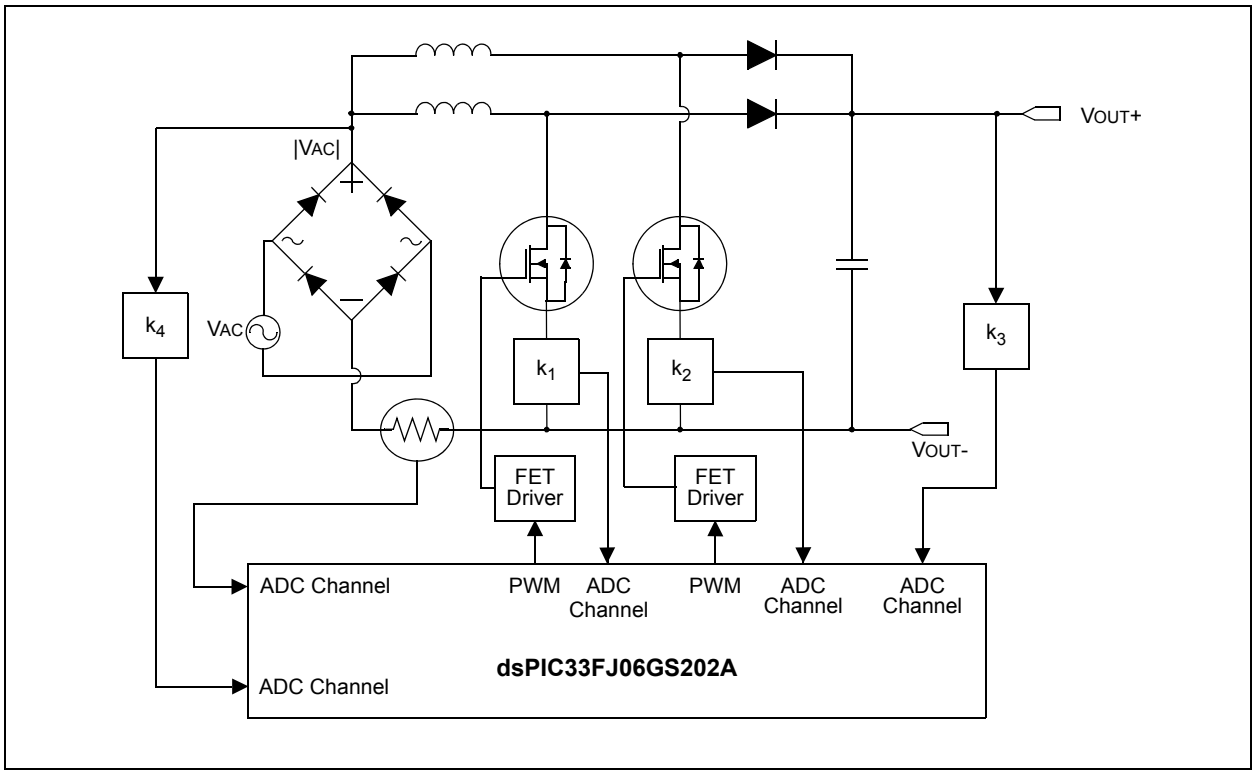

© 2011-2012 Microchip Technology Inc.

FIGURE 2-8: PHASE-SHIFTED FULL-BRIDGE CONVERTER

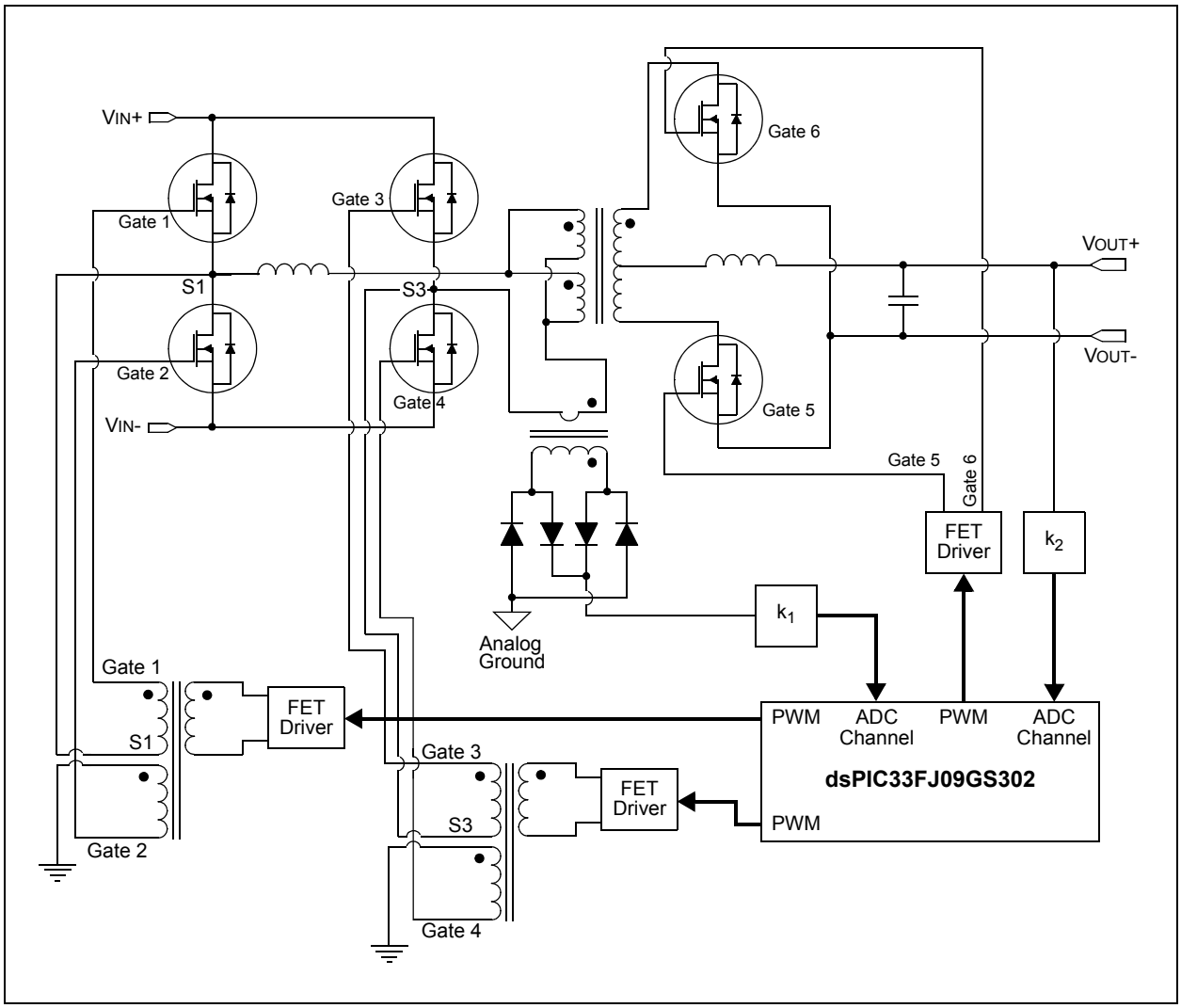

NOTES:

© 2011-2012 Microchip Technology Inc.

3.0 CPU

Note 1: This data sheet summarizes the features of the dsPIC33FJ06GS001/101A/102A/202A and dsPIC33FJ09GS302 families of devices. It is not intended to be a comprehensive reference source. To complement the information in this data sheet, refer to **Section 2. "CPU"** (DS70204) in the "*dsPIC33F/PIC24H Family Reference Manual*", which is available from the Microchip web site (www.microchip.com).

2: Some registers and associated bits described in this section may not be available on all devices. Refer to **Section 4.0 "Memory Organization"** in this data sheet for device-specific register and bit information.

The CPU module has a 16-bit (data) modified Harvard architecture with an enhanced instruction set, including significant support for DSP. The CPU has a 24-bit instruction word with a variable length opcode field. The Program Counter (PC) is 23 bits wide and addresses up to 4M x 24 bits of user program memory space. The actual amount of program memory implemented varies from device to device. A single-cycle instruction prefetch mechanism is used to help maintain throughput and provides predictable execution. All instructions execute in a single cycle, with the exception of instructions that change the program flow, the double-word move (`MOV.D`) instruction and the table instructions. Overhead-free program loop constructs are supported using the `DO` and `REPEAT` instructions, both of which are interruptible at any point.

The dsPIC33FJ06GS001/101A/102A/202A and dsPIC33FJ09GS302 devices have sixteen, 16-bit working registers in the programmer's model. Each of the working registers can serve as a Data, Address or Address Offset register. The sixteenth working register (W15) operates as a software Stack Pointer (SP) for interrupts and calls.

There are two classes of instruction: MCU and DSP. These two instruction classes are seamlessly integrated into a single CPU. The instruction set includes many addressing modes and is designed for optimum C compiler efficiency. For most instructions, the devices are capable of executing a data (or program data) memory read, a working register (data) read, a data memory write and a program (instruction) memory read per instruction cycle. As a result, three parameter instructions can be supported, allowing A + B = C operations to be executed in a single cycle.

A block diagram of the CPU is shown in Figure 3-1, and the programmer's model is shown in Figure 3-2.

3.1 Data Addressing Overview

The data space can be addressed as 32K words or 64 Kbytes and is split into two blocks, referred to as X and Y data memory. Each memory block has its own independent Address Generation Unit (AGU). The MCU class of instructions operates solely through the X memory AGU, which accesses the entire memory map as one linear data space. Certain DSP instructions operate through the X and Y AGUs to support dual operand reads, which splits the data address space into two parts. The X and Y data space boundary is device-specific.

Overhead-free circular buffers (Modulo Addressing mode) are supported in both X and Y address spaces. The Modulo Addressing removes the software boundary checking overhead for DSP algorithms. Furthermore, the X AGU Circular Addressing can be used with any of the MCU class of instructions. The X AGU also supports Bit-Reversed Addressing to greatly simplify input or output data reordering for radix-2 FFT algorithms.

The upper 32 Kbytes of the data space memory map can optionally be mapped into program space at any 16K program word boundary defined by the 8-bit Program Space Visibility Page (PSVPAG) register. The program-to-data space mapping feature lets any instruction access program space as if it were data space.

3.2 DSP Engine Overview

The DSP engine features a high-speed, 17-bit by 17-bit multiplier, a 40-bit ALU, two 40-bit saturating accumulators and a 40-bit bidirectional barrel shifter. The barrel shifter is capable of shifting a 40-bit value up to 16 bits, right or left, in a single cycle. The DSP instructions operate seamlessly with all other instructions and have been designed for optimal real-time performance. The `MAC` instruction and other associated instructions can concurrently fetch two data operands from memory while multiplying two W registers and accumulating and optionally saturating the result in the same cycle. This instruction functionality requires that the RAM data space be split for these instructions and linear for all others. Data space partitioning is achieved in a transparent and flexible manner through dedicating certain working registers to each address space.

3.3 Special MCU Features

A 17-bit by 17-bit single-cycle multiplier is shared by both the MCU ALU and DSP engine. The multiplier can perform signed, unsigned and mixed-sign multiplication. Using a 17-bit by 17-bit multiplier for 16-bit by 16-bit multiplication not only allows you to perform mixed-sign multiplication, it also achieves accurate results for special operations, such as (-1.0) x (-1.0).

The 16/16 and 32/16 divide operations are supported, both fractional and integer. All divide instructions are iterative operations. They must be executed within a `REPEAT` loop, resulting in a total execution time of 19 instruction cycles. The divide operation can be interrupted during any of those 19 cycles without loss of data.

A 40-bit barrel shifter is used to perform up to a 16-bit left or right shift in a single cycle. The barrel shifter can be used by both MCU and DSP instructions.

FIGURE 3-1: CPU CORE BLOCK DIAGRAM

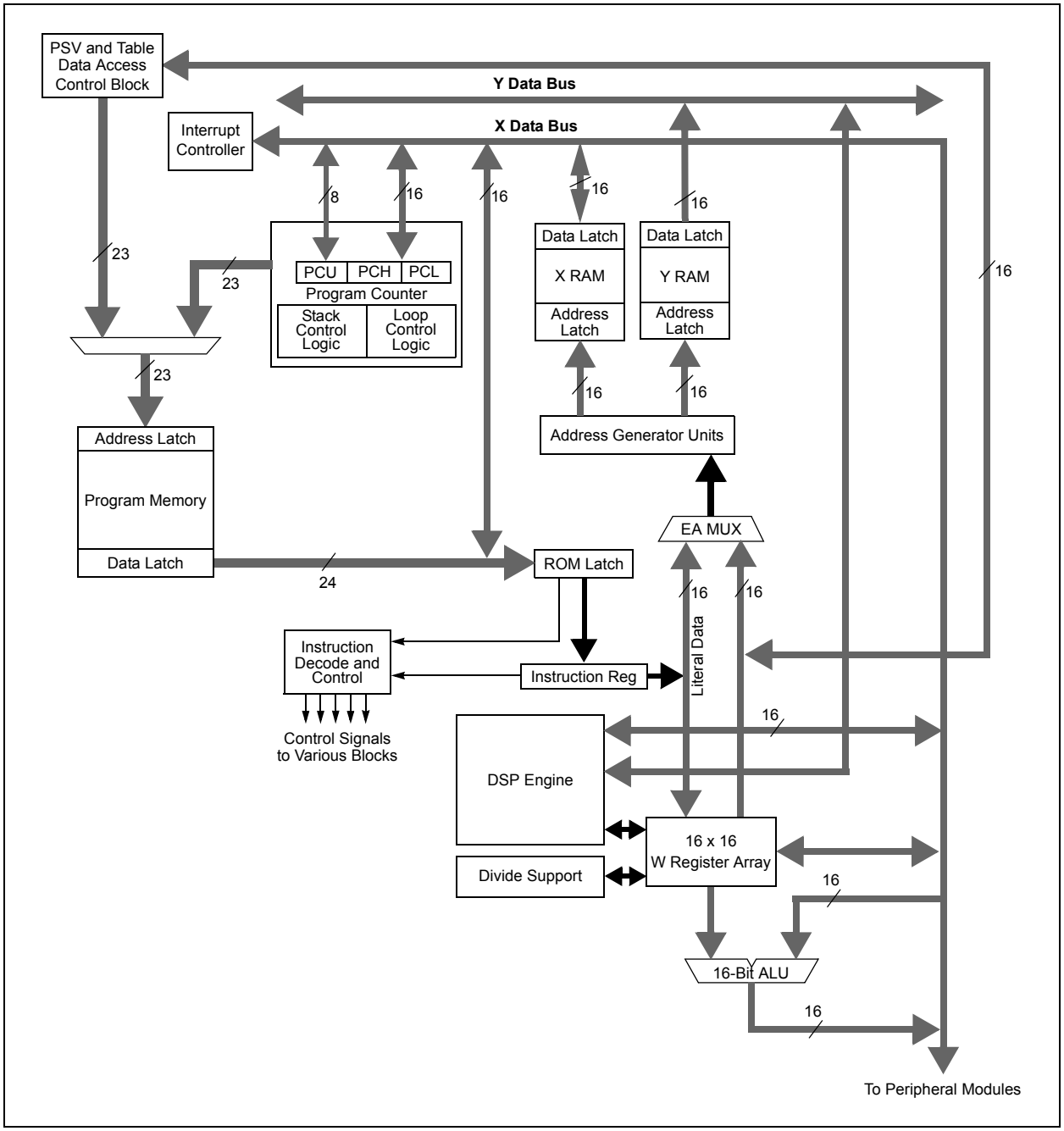

© 2011-2012 Microchip Technology Inc.

FIGURE 3-2: PROGRAMMER'S MODEL

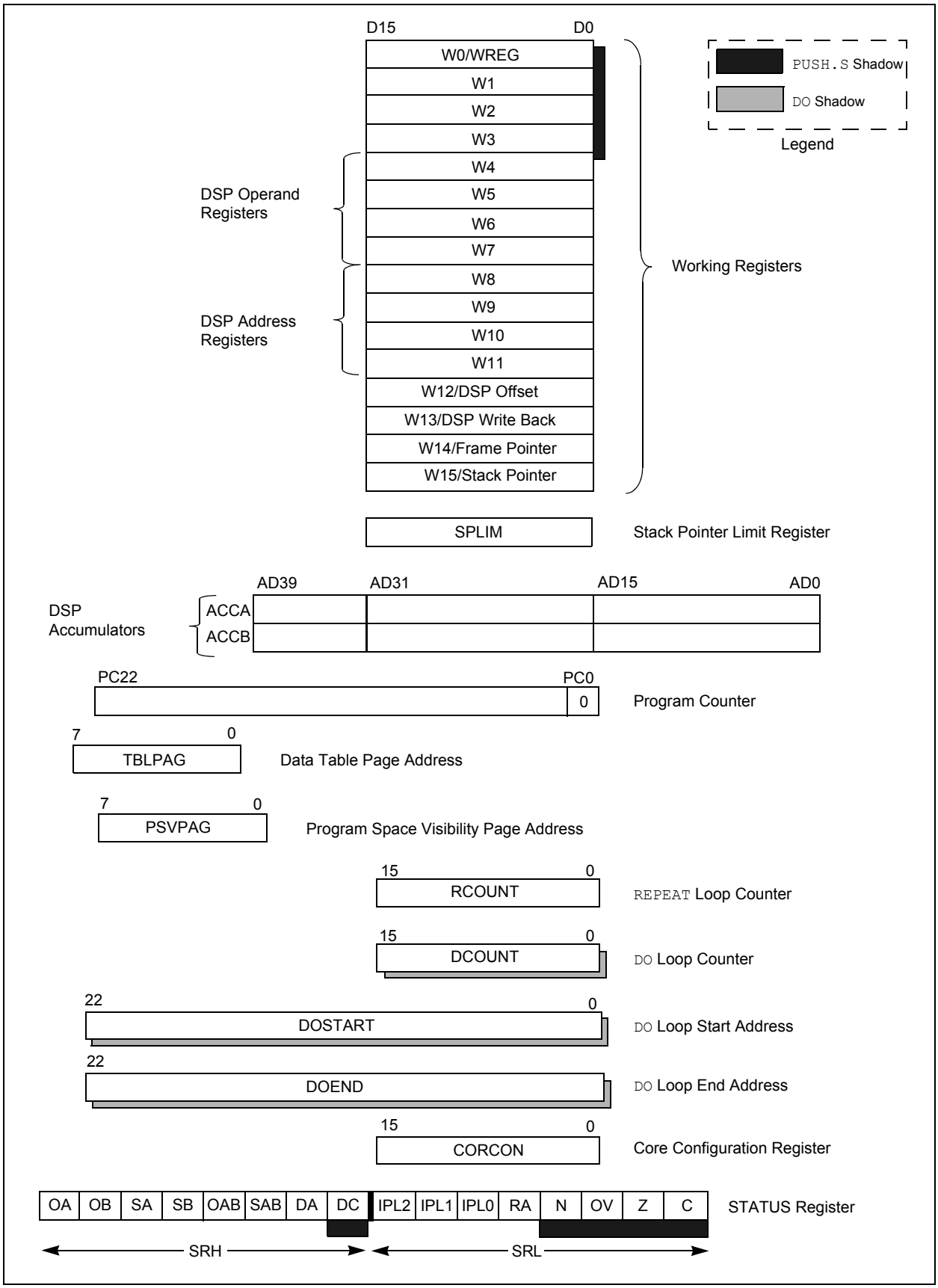

3.4 CPU Control Registers

REGISTER 3-1: SR: CPU STATUS REGISTER

R-0	R-0	R/C-0	R/C-0	R-0	R/C-0	R -0	R/W-0
OA	OB	SA(1)	SB(1)	OAB	SAB(1,4)	DA	DC
bit 15							bit 8

R/W-0(3)	R/W-0(3)	R/W-0(3)	R-0	R/W-0	R/W-0	R/W-0	R/W-0
IPL<2:0>(2)			RA	N	OV	Z	C
bit 7							bit 0

Legend:		
C = Clearable bit	R = Readable bit	U = Unimplemented bit, read as ‘0’
S = Settable bit	W = Writable bit	-n = Value at POR
‘1’ = Bit is set	‘0’ = Bit is cleared	x = Bit is unknown

bit 15 **OA:** Accumulator A Overflow Status bit
1 = Accumulator A overflowed
0 = Accumulator A has not overflowed

bit 14 **OB:** Accumulator B Overflow Status bit
1 = Accumulator B overflowed
0 = Accumulator B has not overflowed

bit 13 **SA:** Accumulator A Saturation ‘Sticky’ Status bit(1)
1 = Accumulator A is saturated or has been saturated at some time
0 = Accumulator A is not saturated

bit 12 **SB:** Accumulator B Saturation ‘Sticky’ Status bit(1)
1 = Accumulator B is saturated or has been saturated at some time
0 = Accumulator B is not saturated

bit 11 **OAB:** OA || OB Combined Accumulator Overflow Status bit
1 = Accumulators A or B have overflowed
0 = Neither Accumulators A or B have overflowed

bit 10 **SAB:** SA || SB Combined Accumulator ‘Sticky’ Status bit(1,4)
1 = Accumulators A or B are saturated or have been saturated at some time in the past
0 = Neither Accumulator A or B are saturated

bit 9 **DA:** DO Loop Active bit
1 = DO loop in progress
0 = DO loop not in progress

bit 8 **DC:** MCU ALU Half Carry/$\overline{\text{Borrow}}$ bit
1 = A carry-out from the 4th low-order bit (for byte-sized data) or 8th low-order bit (for word-sized data) of the result occurred
0 = No carry-out from the 4th low-order bit (for byte-sized data) or 8th low-order bit (for word-sized data) of the result occurred

Note 1: This bit can be read or cleared (not set).
2: The IPL<2:0> bits are concatenated with the IPL3 bit (CORCON<3>) to form the CPU Interrupt Priority Level (IPL). The value in parentheses indicates the IPL if IPL3 = 1. User interrupts are disabled when IPL3 = 1.
3: The IPL<2:0> Status bits are read-only when NSTDIS = 1 (INTCON1<15>).
4: Clearing this bit will clear SA and SB.

© 2011-2012 Microchip Technology Inc.

REGISTER 3-1: SR: CPU STATUS REGISTER (CONTINUED)

bit 7-5 **IPL<2:0>:** CPU Interrupt Priority Level Status bits(2,3)

111 = CPU Interrupt Priority Level is 7 (15), user interrupts disabled
110 = CPU Interrupt Priority Level is 6 (14)
101 = CPU Interrupt Priority Level is 5 (13)
100 = CPU Interrupt Priority Level is 4 (12)
011 = CPU Interrupt Priority Level is 3 (11)
010 = CPU Interrupt Priority Level is 2 (10)
001 = CPU Interrupt Priority Level is 1 (9)
000 = CPU Interrupt Priority Level is 0 (8)

bit 4 **RA:** REPEAT Loop Active bit

1 = REPEAT loop in progress
0 = REPEAT loop not in progress

bit 3 **N:** MCU ALU Negative bit

1 = Result was negative
0 = Result was non-negative (zero or positive)

bit 2 **OV:** MCU ALU Overflow bit

This bit is used for signed arithmetic (2's complement). It indicates an overflow of a magnitude that causes the sign bit to change state.
1 = Overflow occurred for signed arithmetic (in this arithmetic operation)
0 = No overflow occurred

bit 1 **Z:** MCU ALU Zero bit

1 = An operation that affects the Z bit has set it at some time in the past
0 = The most recent operation that affects the Z bit has cleared it (i.e., a non-zero result)

bit 0 **C:** MCU ALU Carry/$\overline{\text{Borrow}}$ bit

1 = A carry-out from the Most Significant bit of the result occurred
0 = No carry-out from the Most Significant bit of the result occurred

Note 1: This bit can be read or cleared (not set).

2: The IPL<2:0> bits are concatenated with the IPL3 bit (CORCON<3>) to form the CPU Interrupt Priority Level (IPL). The value in parentheses indicates the IPL if IPL3 = 1. User interrupts are disabled when IPL3 = 1.

3: The IPL<2:0> Status bits are read-only when NSTDIS = 1 (INTCON1<15>).

4: Clearing this bit will clear SA and SB.

REGISTER 3-2: CORCON: CORE CONTROL REGISTER

U-0	U-0	U-0	R/W-0	R/W-0	R-0	R-0	R-0
—	—	—	US	EDT(1)	DL<2:0>		
bit 15							bit 8

R/W-0	R/W-0	R/W-1	R/W-0	R/C-0	R/W-0	R/W-0	R/W-0
SATA	SATB	SATDW	ACCSAT	IPL3(2)	PSV	RND	IF
bit 7							bit 0

Legend:	C = Clearable bit		
R = Readable bit	W = Writable bit	-n = Value at POR	‘1’ = Bit is set
0’ = Bit is cleared	‘x = Bit is unknown	U = Unimplemented bit, read as ‘0’	

bit 15-13 **Unimplemented:** Read as ‘0’

bit 12 **US:** DSP Multiply Unsigned/Signed Control bit
1 = DSP engine multiplies are unsigned
0 = DSP engine multiplies are signed

bit 11 **EDT:** Early DO Loop Termination Control bit(1)
1 = Terminate executing DO loop at end of current loop iteration
0 = No effect

bit 10-8 **DL<2:0>:** DO Loop Nesting Level Status bits
111 = 7 DO loops active
•
•
•
001 = 1 DO loop active
000 = 0 DO loops active

bit 7 **SATA:** ACCA Saturation Enable bit
1 = Accumulator A saturation is enabled
0 = Accumulator A saturation is disabled

bit 6 **SATB:** ACCB Saturation Enable bit
1 = Accumulator B saturation is enabled
0 = Accumulator B saturation is disabled

bit 5 **SATDW:** Data Space Write from DSP Engine Saturation Enable bit
1 = Data space write saturation is enabled
0 = Data space write saturation is disabled

bit 4 **ACCSAT:** Accumulator Saturation Mode Select bit
1 = 9.31 saturation (super saturation)
0 = 1.31 saturation (normal saturation)

bit 3 **IPL3:** CPU Interrupt Priority Level Status bit 3(2)
1 = CPU Interrupt Priority Level is greater than 7
0 = CPU Interrupt Priority Level is 7 or less

bit 2 **PSV:** Program Space Visibility in Data Space Enable bit
1 = Program space is visible in data space
0 = Program space is not visible in data space

bit 1 **RND:** Rounding Mode Select bit
1 = Biased (conventional) rounding is enabled
0 = Unbiased (convergent) rounding is enabled

bit 0 **IF:** Integer or Fractional Multiplier Mode Select bit
1 = Integer mode enabled for DSP multiply ops
0 = Fractional mode enabled for DSP multiply ops

Note 1: This bit will always read as ‘0’.
2: The IPL3 bit is concatenated with the IPL<2:0> bits (SR<7:5>) to form the CPU Interrupt Priority Level.

© 2011-2012 Microchip Technology Inc.

3.5 Arithmetic Logic Unit (ALU)

The ALU is 16 bits wide and is capable of addition, subtraction, bit shifts and logic operations. Unless otherwise mentioned, arithmetic operations are 2's complement in nature. Depending on the operation, the ALU can affect the values of the Carry (C), Zero (Z), Negative (N), Overflow (OV) and Digit Carry (DC) Status bits in the SR register. The C and DC Status bits operate as Borrow and Digit Borrow bits, respectively, for subtraction operations.

The ALU can perform 8-bit or 16-bit operations, depending on the mode of the instruction that is used. Data for the ALU operation can come from the W register array or data memory, depending on the addressing mode of the instruction. Likewise, output data from the ALU can be written to the W register array or a data memory location.

Refer to the *"16-Bit MCU and DSC Programmer's Reference Manual"* (DS70157) for information on the SR bits affected by each instruction.

The CPU incorporates hardware support for both multiplication and division. This includes a dedicated hardware multiplier and support hardware for 16-bit divisor division.

3.5.1 MULTIPLIER

Using the high-speed, 17-bit x 17-bit multiplier of the DSP engine, the ALU supports unsigned, signed or mixed-sign operation in several MCU multiplication modes:

- 16-bit x 16-bit signed
- 16-bit x 16-bit unsigned
- 16-bit signed x 5-bit (literal) unsigned
- 16-bit unsigned x 16-bit unsigned
- 16-bit unsigned x 5-bit (literal) unsigned
- 16-bit unsigned x 16-bit signed
- 8-bit unsigned x 8-bit unsigned

3.5.2 DIVIDER

The divide block supports 32-bit/16-bit and 16-bit/16-bit signed and unsigned integer divide operations with the following data sizes:

- 32-bit signed/16-bit signed divide
- 32-bit unsigned/16-bit unsigned divide
- 16-bit signed/16-bit signed divide
- 16-bit unsigned/16-bit unsigned divide

The quotient for all divide instructions ends up in W0 and the remainder in W1. 16-bit signed and unsigned `DIV` instructions can specify any W register for both the 16-bit divisor (Wn) and any W register (aligned) pair (W(m + 1):Wm) for the 32-bit dividend. The divide algorithm takes one cycle per bit of divisor, so both 32-bit/16-bit and 16-bit/16-bit instructions take the same number of cycles to execute.

3.6 DSP Engine

The DSP engine consists of a high-speed, 17-bit x 17-bit multiplier, a barrel shifter and a 40-bit adder/subtracter (with two target accumulators, round and saturation logic).

The dsPIC33FJ06GS001/101A/102A/202A and dsPIC33FJ09GS302 devices feature a single-cycle instruction flow architecture; therefore, concurrent operation of the DSP engine with MCU instruction flow is not possible. However, some MCU ALU and DSP engine resources can be used concurrently by the same instruction (for example, ED, EDAC).

The DSP engine can also perform inherent accumulator-to-accumulator operations that require no additional data. These instructions are `ADD`, `SUB` and `NEG`.

The DSP engine has options selected through bits in the CPU Core Control register (CORCON), as listed below:

- Fractional or Integer DSP Multiply (IF)
- Signed or Unsigned DSP Multiply (US)
- Conventional or Convergent Rounding (RND)
- Automatic Saturation On/Off for ACCA (SATA)
- Automatic Saturation On/Off for ACCB (SATB)
- Automatic Saturation On/Off for Writes to Data Memory (SATDW)
- Accumulator Saturation mode Selection (ACCSAT)

A block diagram of the DSP engine is shown in Figure 3-3.

TABLE 3-1: DSP INSTRUCTIONS SUMMARY

Instruction	Algebraic Operation	ACC Write Back
`CLR`	$A = 0$	Yes
`ED`	$A = (x - y)^2$	No
`EDAC`	$A = A + (x - y)^2$	No
`MAC`	$A = A + (x * y)$	Yes
`MAC`	$A = A + x^2$	No
`MOVSAC`	No change in A	Yes
`MPY`	$A = x * y$	No
`MPY`	$A = x^2$	No
`MPY.N`	$A = -x * y$	No
`MSC`	$A = A - x * y$	Yes

FIGURE 3-3: DSP ENGINE BLOCK DIAGRAM

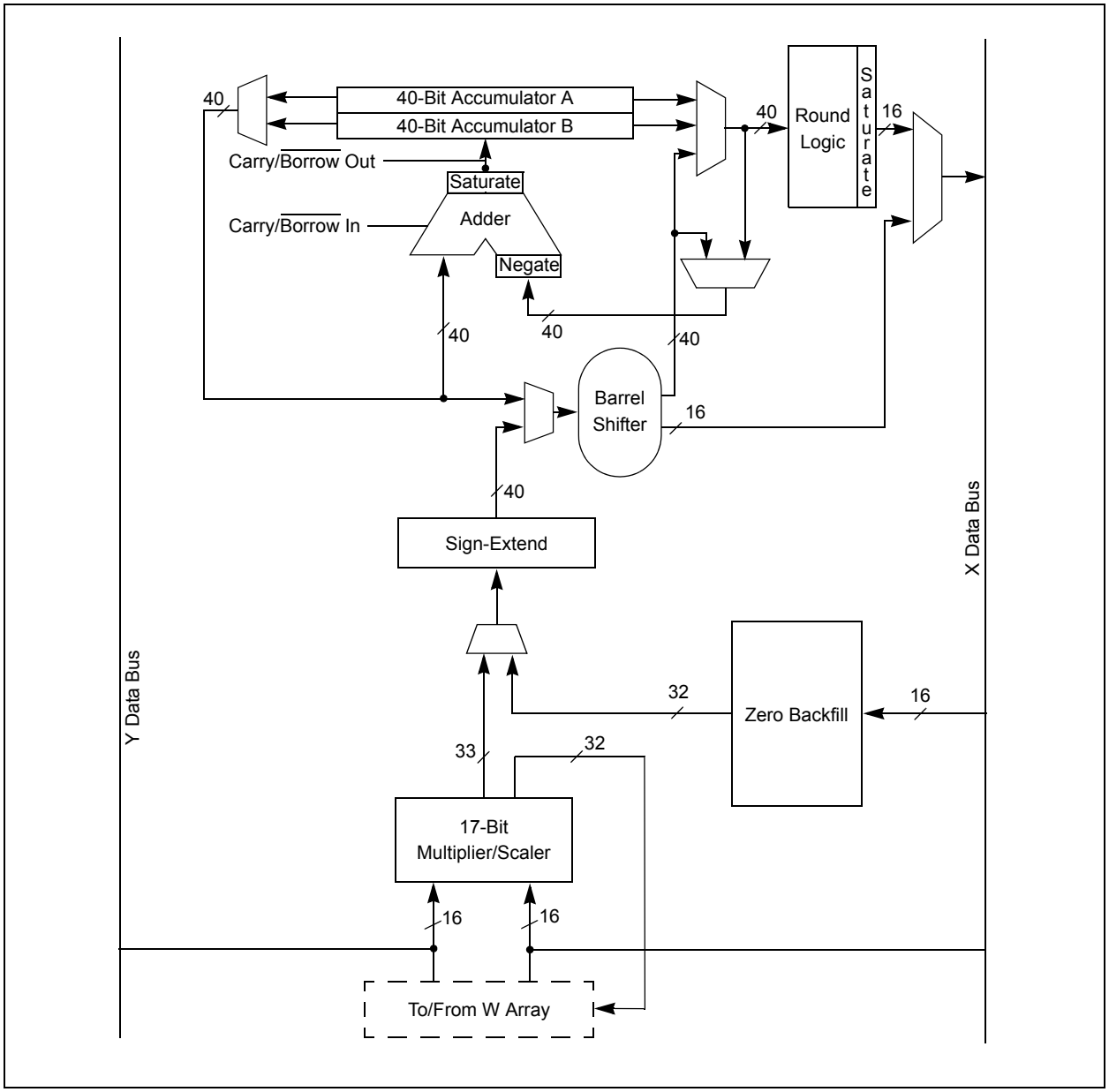

© 2011-2012 Microchip Technology Inc.

3.6.1 MULTIPLIER

The 17-bit x 17-bit multiplier is capable of signed or unsigned operation and can multiplex its output using a scaler to support either 1.31 fractional (Q31) or 32-bit integer results. Unsigned operands are zero-extended into the 17th bit of the multiplier input value. Signed operands are sign-extended into the 17th bit of the multiplier input value. The output of the 17-bit x 17-bit multiplier/scaler is a 33-bit value that is sign-extended to 40 bits. Integer data is inherently represented as a signed 2's complement value, where the Most Significant bit (MSb) is defined as a sign bit. The range of an N-bit 2's complement integer is -2^{N-1} to $2^{N-1} – 1$.

- For a 16-bit integer, the data range is -32768 (0x8000) to 32767 (0x7FFF) including 0
- For a 32-bit integer, the data range is -2,147,483,648 (0x8000 0000) to 2,147,483,647 (0x7FFF FFFF)

When the multiplier is configured for fractional multiplication, the data is represented as a 2's complement fraction, where the MSb is defined as a sign bit and the radix point is implied to lie just after the sign bit (QX format). The range of an N-bit 2's complement fraction with this implied radix point is -1.0 to $(1 – 2^{1-N})$. For a 16-bit fraction, the Q15 data range is -1.0 (0x8000) to 0.999969482 (0x7FFF) including 0 and has a precision of 3.01518×10^{-5}. In Fractional mode, the 16 x 16 multiply operation generates a 1.31 product that has a precision of 4.65661×10^{-10}.

The same multiplier is used to support the MCU multiply instructions, which include integer 16-bit signed, unsigned and mixed-sign multiply operations.

The `MUL` instruction can be directed to use byte or word-sized operands. Byte operands will direct a 16-bit result, and word operands will direct a 32-bit result to the specified register(s) in the W array.

3.6.2 DATA ACCUMULATORS AND ADDER/SUBTRACTER

The data accumulator consists of a 40-bit adder/subtracter with automatic sign extension logic. It can select one of two accumulators (A or B) as its pre-accumulation source and post-accumulation destination. For the `ADD` and `LAC` instructions, the data to be accumulated or loaded can be optionally scaled using the barrel shifter prior to accumulation.

3.6.2.1 Adder/Subtracter, Overflow and Saturation

The adder/subtracter is a 40-bit adder with an optional zero input into one side, and either true or complement data into the other input.

- In the case of addition, the Carry/$\overline{\text{Borrow}}$ input is active-high and the other input is true data (not complemented)
- In the case of subtraction, the Carry/$\overline{\text{Borrow}}$ input is active-low and the other input is complemented

The adder/subtracter generates Overflow Status bits, SA/SB and OA/OB, which are latched and reflected in the STATUS register:

- Overflow from bit 39: This is a catastrophic overflow in which the sign of the accumulator is destroyed
- Overflow into guard bits, 32 through 39: This is a recoverable overflow. This bit is set whenever all the guard bits are not identical to each other.

The adder has an additional saturation block that controls accumulator data saturation, if selected. It uses the result of the adder, the Overflow Status bits described previously and the SAT<A:B> (CORCON<7:6>) and ACCSAT (CORCON<4>) mode control bits to determine when and to what value to saturate.

Six STATUS register bits support saturation and overflow:

- OA: ACCA overflowed into guard bits
- OB: ACCB overflowed into guard bits
- SA: ACCA saturated (bit 31 overflow and saturation)
  or
  ACCA overflowed into guard bits and saturated (bit 39 overflow and saturation)
- SB: ACCB saturated (bit 31 overflow and saturation)
  or
  ACCB overflowed into guard bits and saturated (bit 39 overflow and saturation)
- OAB: Logical OR of OA and OB
- SAB: Logical OR of SA and SB

The OA and OB bits are modified each time data passes through the adder/subtracter. When set, they indicate that the most recent operation has overflowed into the accumulator guard bits (bits 32 through 39). The OA and OB bits can also optionally generate an arithmetic warning trap when set and the corresponding Overflow Trap Enable bits (OVATE, OVBTE) in the INTCON1 register are set (refer to **Section 7.0 "Interrupt Controller"**). This allows the user application to take immediate action, for example, to correct system gain.

The SA and SB bits are modified each time data passes through the adder/subtracter, but can only be cleared by the user application. When set, they indicate that the accumulator has overflowed its maximum range (bit 31 for 32-bit saturation or bit 39 for 40-bit saturation) and will be saturated (if saturation is enabled). When saturation is not enabled, SA and SB default to bit 39 overflow and thus, indicate that a catastrophic overflow has occurred. If the COVTE bit in the INTCON1 register is set, SA and SB bits will generate an arithmetic warning trap when saturation is disabled.

The Overflow and Saturation Status bits can optionally be viewed in the STATUS Register (SR) as the logical OR of OA and OB (in bit OAB) and the logical OR of SA and SB (in bit SAB). Programmers can check one bit in the STATUS Register to determine if either accumulator has overflowed, or one bit to determine if either accumulator has saturated. This is useful for complex number arithmetic, which typically uses both accumulators.

The device supports three Saturation and Overflow modes:

- Bit 39 Overflow and Saturation:
  When bit 39 overflow and saturation occurs, the saturation logic loads the maximally positive 9.31 (0x7FFFFFFFFF) or maximally negative 9.31 value (0x8000000000) into the target accumulator. The SA or SB bit is set and remains set until cleared by the user application. This condition is referred to as 'super saturation' and provides protection against erroneous data or unexpected algorithm problems (such as gain calculations).
- Bit 31 Overflow and Saturation:
  When bit 31 overflow and saturation occurs, the saturation logic then loads the maximally positive 1.31 value (0x007FFFFFFF) or maximally negative 1.31 value (0x0080000000) into the target accumulator. The SA or SB bit is set and remains set until cleared by the user application. When this Saturation mode is in effect, the guard bits are not used, so the OA, OB or OAB bits are never set.
- Bit 39 Catastrophic Overflow:
  Bit 39 Overflow Status bit, from the adder, is used to set the SA or SB bit, which remains set until cleared by the user application. No saturation operation is performed, and the accumulator is allowed to overflow, destroying its sign. If the COVTE bit in the INTCON1 register is set, a catastrophic overflow can initiate a trap exception.

3.6.3 ACCUMULATOR 'WRITE BACK'

The `MAC` class of instructions (with the exception of `MPY`, `MPY.N`, `ED` and `EDAC`) can optionally write a rounded version of the high word (bits 31 through 16) of the accumulator that is not targeted by the instruction into data space memory. The write is performed across the X bus into combined X and Y address space. The following addressing modes are supported:

- W13, Register Direct:
  The rounded contents of the non-target accumulator are written into W13 as a 1.15 fraction.
- [W13] + = 2, Register Indirect with Post-Increment:
  The rounded contents of the non-target accumulator are written into the address pointed to by W13 as a 1.15 fraction. W13 is then incremented by 2 (for a word write).

3.6.3.1 Round Logic

The round logic is a combinational block that performs a conventional (biased) or convergent (unbiased) round function during an accumulator write (store). The Round mode is determined by the state of the RND bit in the CORCON register. It generates a 16-bit, 1.15 data value that is passed to the data space write saturation logic. If rounding is not indicated by the instruction, a truncated 1.15 data value is stored and the least significant word is simply discarded.

Conventional rounding zero-extends bit 15 of the accumulator and adds it to the ACCxH word (bits 16 through 31 of the accumulator).

- If the ACCxL word (bits 0 through 15 of the accumulator) is between 0x8000 and 0xFFFF (0x8000 included), ACCxH is incremented
- If ACCxL is between 0x0000 and 0x7FFF, ACCxH is left unchanged

A consequence of this algorithm is that over a succession of random rounding operations, the value tends to be biased slightly positive.

Convergent (or unbiased) rounding operates in the same manner as conventional rounding, except when ACCxL equals 0x8000. In this case, the Least Significant bit (bit 16 of the accumulator) of ACCxH is examined:

- If it is '`1`', ACCxH is incremented
- If it is '`0`', ACCxH is not modified

Assuming that bit 16 is effectively random in nature, this scheme removes any rounding bias that may accumulate.

The `SAC` and `SAC.R` instructions store either a truncated (`SAC`), or rounded (`SAC.R`) version of the contents of the target accumulator to data memory via the X bus, subject to data saturation (see **Section 3.6.3.2 "Data Space Write Saturation"**). For the `MAC` class of instructions, the accumulator write-back operation functions in the same manner, addressing combined MCU (X and Y) data space though the X bus. For this class of instructions, the data is always subject to rounding.'

© 2011-2012 Microchip Technology Inc.

3.6.3.2 Data Space Write Saturation

In addition to adder/subtracter saturation, writes to data space can also be saturated, but without affecting the contents of the source accumulator. The data space write saturation logic block accepts a 16-bit, 1.15 fractional value from the round logic block as its input, together with overflow status from the original source (accumulator) and the 16-bit round adder. These inputs are combined and used to select the appropriate 1.15 fractional value as output to write to data space memory.

If the SATDW bit in the CORCON register is set, data (after rounding or truncation) is tested for overflow and adjusted accordingly:

- For input data greater than 0x007FFF, data written to memory is forced to the maximum positive 1.15 value, 0x7FFF
- For input data less than 0xFF8000, data written to memory is forced to the maximum negative 1.15 value, 0x8000

The Most Significant bit of the source (bit 39) is used to determine the sign of the operand being tested.

If the SATDW bit in the CORCON register is not set, the input data is always passed through unmodified under all conditions.

3.6.4 BARREL SHIFTER

The barrel shifter can perform up to 16-bit arithmetic or logic right shifts, or up to 16-bit left shifts in a single cycle. The source can be either of the two DSP accumulators or the X bus (to support multi-bit shifts of register or memory data).

The shifter requires a signed binary value to determine both the magnitude (number of bits) and direction of the shift operation. A positive value shifts the operand right. A negative value shifts the operand left. A value of ‘0’ does not modify the operand.

The barrel shifter is 40 bits wide, thereby obtaining a 40-bit result for DSP shift operations and a 16-bit result for MCU shift operations. Data from the X bus is presented to the barrel shifter between bit positions 16 and 31 for right shifts, and between bit positions 0 and 15 for left shifts.

NOTES:

© 2011-2012 Microchip Technology Inc.

4.0 MEMORY ORGANIZATION

Note: This data sheet summarizes the features of the dsPIC33FJ06GS001/101A/102A/202A and dsPIC33FJ09GS302 families of devices. It is not intended to be a comprehensive reference source. To complement the information in this data sheet, refer to **Section 4. "Program Memory"** (DS70203) in the "*dsPIC33F/PIC24H Family Reference Manual*", which is available from the Microchip web site (www.microchip.com).

The device architecture features separate program and data memory spaces and buses. This architecture also allows the direct access to program memory from the data space during code execution.

4.1 Program Address Space

The device program address memory space is 4M instructions. The space is addressable by a 24-bit value derived either from the 23-bit Program Counter (PC) during program execution, or from table operation or data space remapping as described in **Section 4.7 "Interfacing Program and Data Memory Spaces"**.

User application access to the program memory space is restricted to the lower half of the address range (0x000000 to 0x7FFFFF). The exception is the use of `TBLRD/TBLWT` operations, which use TBLPAG<7> to permit access to the constant current source trim value and Device ID sections of the configuration memory space.

The device memory maps are shown in Figure 4-1.

FIGURE 4-1: PROGRAM MEMORY MAPS FOR dsPIC33FJ06GS001/101A/102A/202A and dsPIC33FJ09GS302 DEVICES

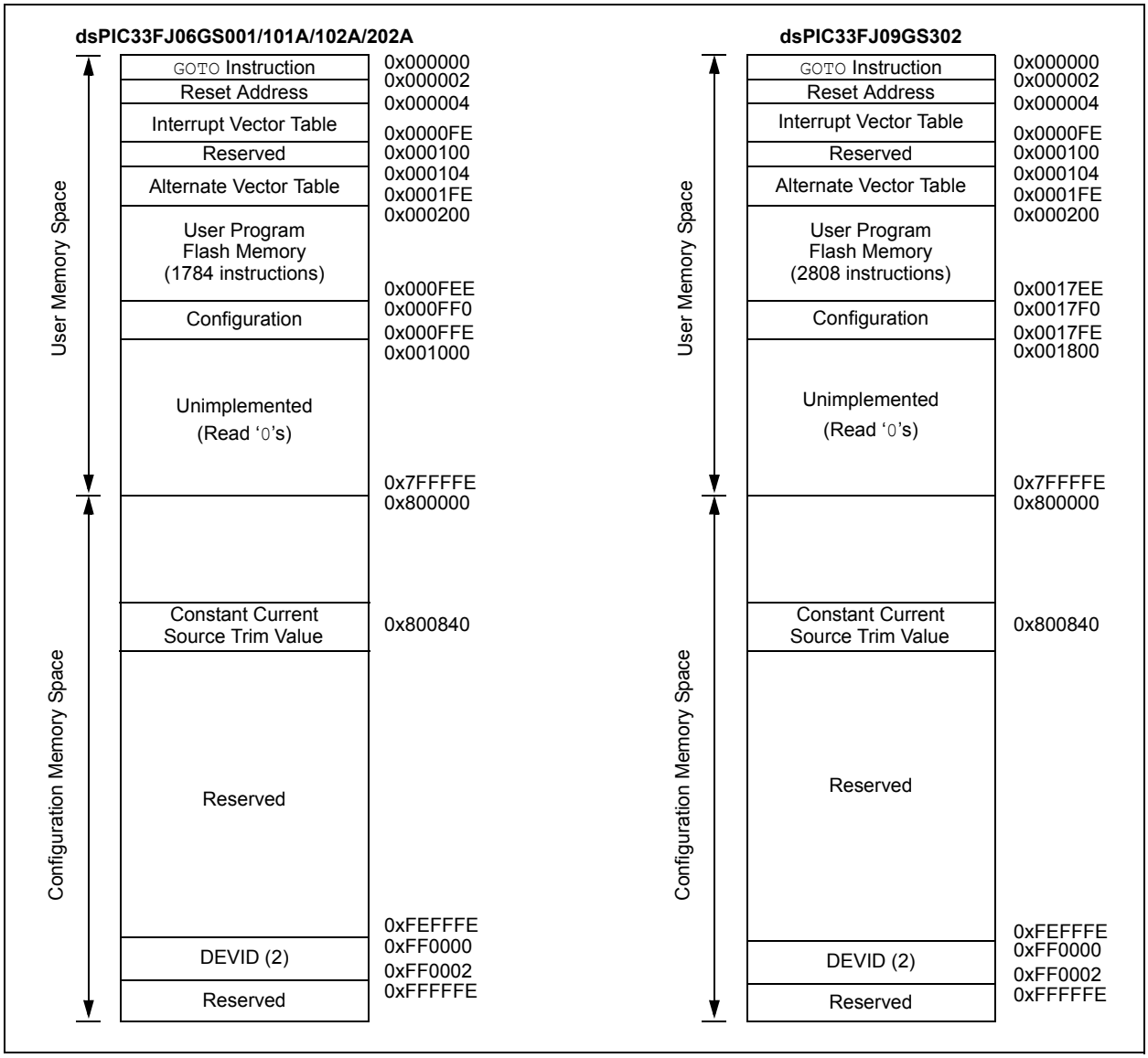

4.1.1 PROGRAM MEMORY ORGANIZATION

The program memory space is organized in word-addressable blocks. Although it is treated as 24 bits wide, it is more appropriate to think of each address of the program memory as a lower and upper word, with the upper byte of the upper word being unimplemented. The lower word always has an even address, while the upper word has an odd address (see Figure 4-2).

Program memory addresses are always word-aligned on the lower word, and addresses are incremented or decremented by two during the code execution. This arrangement provides compatibility with data memory space addressing and makes data in the program memory space accessible.

4.1.2 INTERRUPT AND TRAP VECTORS

All devices reserve the addresses between 0x00000 and 0x000200 for hard-coded program execution vectors. A hardware Reset vector is provided to redirect code execution from the default value of the PC on device Reset to the actual start of code. A `GOTO` instruction is programmed by the user application at 0x000000, with the actual address for the start of code at 0x000002.

The devices also have two interrupt vector tables, located from 0x000004 to 0x0000FF and 0x000100 to 0x0001FF. These vector tables allow each of the device interrupt sources to be handled by separate Interrupt Service Routines (ISRs). A more detailed discussion of the interrupt vector tables is provided in **Section 7.1 "Interrupt Vector Table"**.

FIGURE 4-2: PROGRAM MEMORY ORGANIZATION

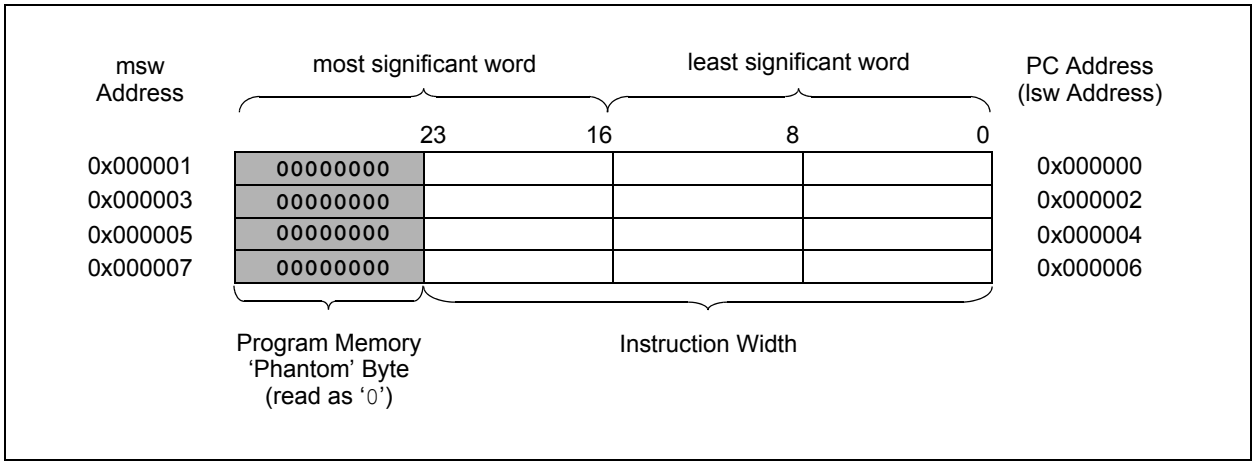

© 2011-2012 Microchip Technology Inc.

4.2 Data Address Space

The CPU has a separate, 16-bit wide data memory space. The data space is accessed using separate Address Generation Units (AGUs) for read and write operations. The data memory maps are shown in Figure 4-3.

All Effective Addresses (EAs) in the data memory space are 16 bits wide and point to bytes within the data space. This arrangement gives a data space address range of 64 Kbytes or 32K words. The lower half of the data memory space (that is, when EA<15> = 0) is used for implemented memory addresses, while the upper half (EA<15> = 1) is reserved for the Program Space Visibility area (see **Section 4.7.3 "Reading Data from Program Memory Using Program Space Visibility"**).

All devices implement up to 1 Kbyte of data memory. Should an EA point to a location outside of this area, an all-zero word or byte will be returned.

4.2.1 DATA SPACE WIDTH

The data memory space is organized in byte-addressable, 16-bit wide blocks. Data is aligned in data memory and registers as 16-bit words, but all data space EAs resolve to bytes. The Least Significant Bytes (LSBs) of each word have even addresses, while the Most Significant Bytes (MSBs) have odd addresses.

4.2.2 DATA MEMORY ORGANIZATION AND ALIGNMENT

To maintain backward compatibility with PIC® MCU devices and improve data space memory usage efficiency, the instruction set supports both word and byte operations. As a consequence of byte accessibility, all Effective Address calculations are internally scaled to step through word-aligned memory. For example, the core recognizes Post-Modified Register Indirect Addressing mode [Ws++], which results in a value of Ws + 1 for byte operations and Ws + 2 for word operations.

Data byte reads will read the complete word that contains the byte, using the LSb of any EA to determine which byte to select. The selected byte is placed onto the LSB of the data path. That is, data memory and registers are organized as two parallel byte-wide entities with shared (word) address decode but separate write lines. Data byte writes only write to the corresponding side of the array or register that matches the byte address.

All word accesses must be aligned to an even address. Misaligned word data fetches are not supported, so care must be taken when mixing byte and word operations, or translating from 8-bit MCU code. If a misaligned read or write is attempted, an address error trap is generated. If the error occurred on a read, the instruction underway is completed. If the error occurred on a write, the instruction is executed but the write does not occur. In either case, a trap is then executed, allowing the system and/or user application to examine the machine state prior to execution of the address Fault.

All byte loads into any W register are loaded into the Least Significant Byte. The Most Significant Byte is not modified.

A Sign-Extend (SE) instruction is provided to allow user applications to translate 8-bit signed data to 16-bit signed values. Alternatively, for 16-bit unsigned data, user applications can clear the MSB of any W register by executing a Zero-Extend (ZE) instruction on the appropriate address.

4.2.3 SFR SPACE

The first 2 Kbytes of the Near Data Space, from 0x0000 to 0x07FF, is primarily occupied by Special Function Registers (SFRs). These are used by the core and peripheral modules for controlling the operation of the device.

SFRs are distributed among the modules that they control, and are generally grouped together by module. Much of the SFR space contains unused addresses; these are read as '0'.

Note:	The actual set of peripheral features and interrupts varies by the device. Refer to the corresponding device tables and pinout diagrams for device-specific information.

4.2.4 NEAR DATA SPACE

The 8-Kbyte area between 0x0000 and 0x1FFF is referred to as the Near Data Space. Locations in this space are directly addressable via a 13-bit absolute address field within all memory direct instructions. Additionally, the whole data space is addressable using MOV instructions, which support Memory Direct Addressing mode with a 16-bit address field, or by using Indirect Addressing mode using a working register as an Address Pointer.

FIGURE 4-3: DATA MEMORY MAP FOR dsPIC33FJ06GS001/101A/102A DEVICES WITH 256 BYTES OF RAM

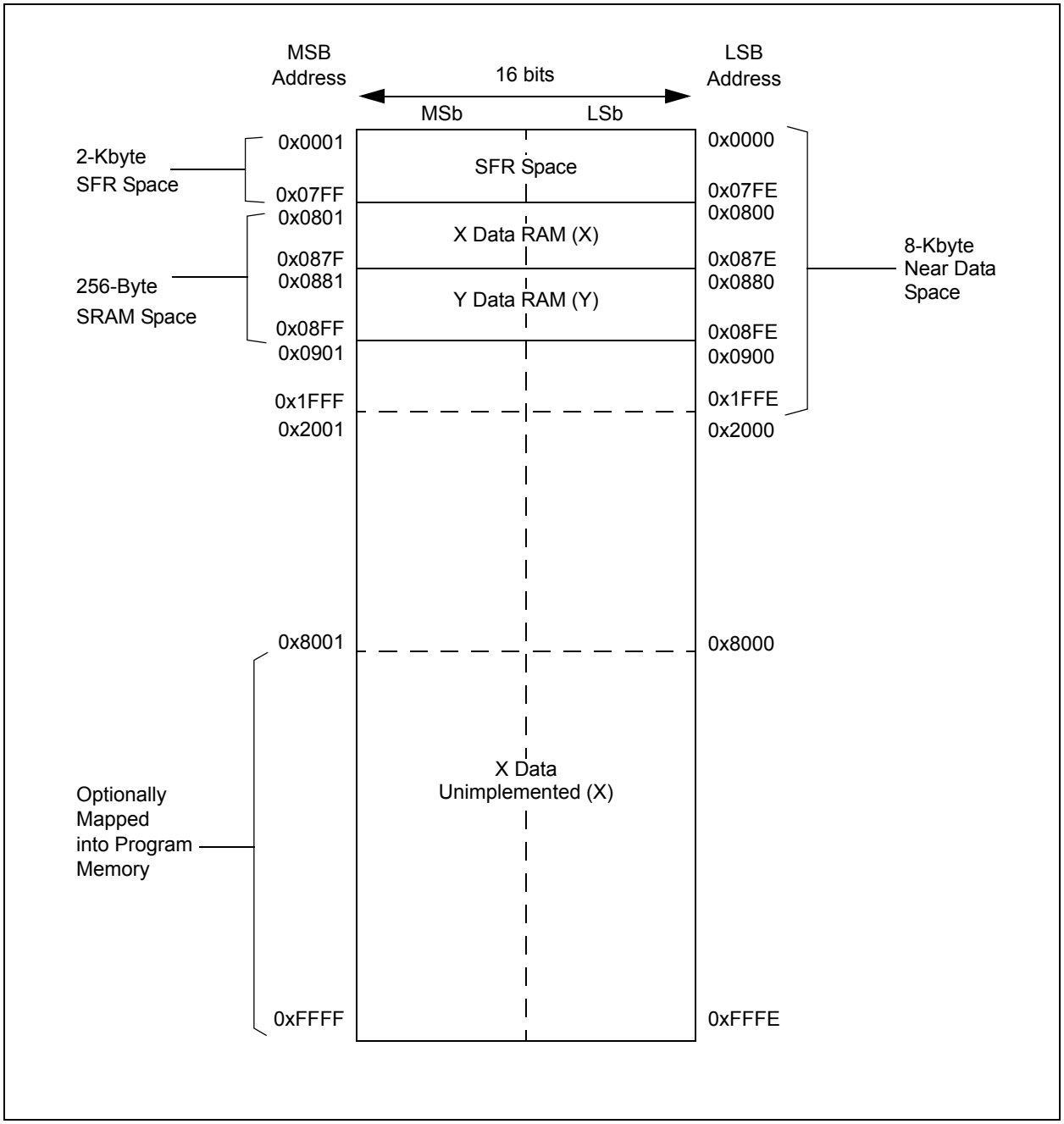

© 2011-2012 Microchip Technology Inc.

FIGURE 4-4: DATA MEMORY MAP FOR THE dsPIC33FJ09GS302 DEVICE WITH 1 KB RAM

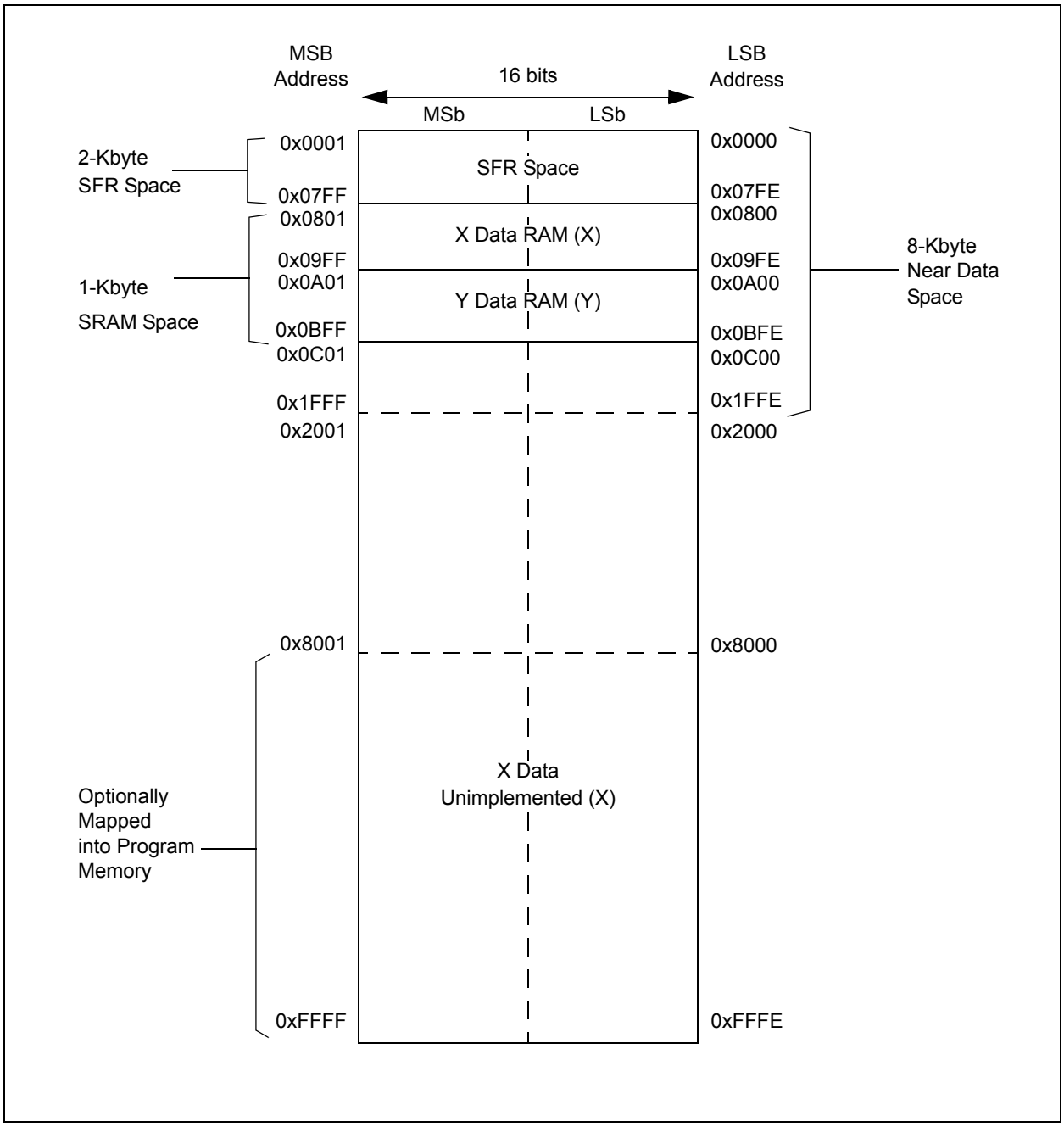

4.2.5 X AND Y DATA SPACES

The core has two data spaces, X and Y. These data spaces can be considered either separate (for some DSP instructions), or as one unified linear address range (for MCU instructions). The data spaces are accessed using two Address Generation Units (AGUs) and separate data paths. This feature allows certain instructions to concurrently fetch two words from RAM, thereby enabling efficient execution of DSP algorithms, such as Finite Impulse Response (FIR) filtering and Fast Fourier Transform (FFT).

The X data space is used by all instructions and supports all addressing modes. X data space has separate read and write data buses. The X read data bus is the read data path for all instructions that view data space as combined X and Y address space. It is also the X data prefetch path for the dual operand DSP instructions (`MAC` class).

The Y data space is used in concert with the X data space by the `MAC` class of instructions (`CLR`, `ED`, `EDAC`, `MAC`, `MOVSAC`, `MPY`, `MPY.N` and `MSC`) to provide two concurrent data read paths.

Both the X and Y data spaces support Modulo Addressing mode for all instructions, subject to addressing mode restrictions. Bit-Reversed Addressing mode is only supported for writes to X data space.

All data memory writes, included in DSP instructions, view data space as combined X and Y address space. The boundary between the X and Y data spaces is device-dependent and is not user-programmable.

All Effective Addresses are 16 bits wide and point to bytes within the data space. Therefore, the data space address range is 64 Kbytes, or 32K words, though the implemented memory locations vary by device.

© 2011-2012 Microchip Technology Inc.

4.3 Special Function Register Maps

TABLE 4-1: CPU CORE REGISTER MAP

SFR Name	SFR Addr	Bit 15	Bit 14	Bit 13	Bit 12	Bit 11	Bit 10	Bit 9	Bit 8	Bit 7	Bit 6	Bit 5	Bit 4	Bit 3	Bit 2	Bit 1	Bit 0	All Resets
WREG0	0000	Working Register 0																0000
WREG1	0002	Working Register 1																0000
WREG2	0004	Working Register 2																0000
WREG3	0006	Working Register 3																0000
WREG4	0008	Working Register 4																0000
WREG5	000A	Working Register 5																0000
WREG6	000C	Working Register 6																0000
WREG7	000E	Working Register 7																0000
WREG8	0010	Working Register 8																0000
WREG9	0012	Working Register 9																0000
WREG10	0014	Working Register 10																0000
WREG11	0016	Working Register 11																0000
WREG12	0018	Working Register 12																0000
WREG13	001A	Working Register 13																0000
WREG14	001C	Working Register 14																0000
WREG15	001E	Working Register 15																0800
SPLIM	0020	Stack Pointer Limit Register																xxxx
ACCAL	0022	ACCAL																xxxx
ACCAH	0024	ACCAH																xxxx
ACCAU	0026	ACCA<39>	ACCA<39>	ACCA<39>	ACCA<39>	ACCA<39>	ACCA<39>	ACCA<39>	ACCA<39>	ACCAU								xxxx
ACCBL	0028	ACCBL																xxxx
ACCBH	002A	ACCBH																xxxx
ACCBU	002C	ACCB<39>	ACCB<39>	ACCB<39>	ACCB<39>	ACCB<39>	ACCB<39>	ACCB<39>	ACCB<39>	ACCBU								xxxx
PCL	002E	Program Counter Low Word Register																0000
PCH	0030	—	—	—	—	—	—	—	—	Program Counter High Byte Register								0000
TBLPAG	0032	—	—	—	—	—	—	—	—	Table Page Address Pointer Register								0000
PSVPAG	0034	—	—	—	—	—	—	—	—	Program Memory Visibility Page Address Pointer Register								0000
RCOUNT	0036	Repeat Loop Counter Register																xxxx
DCOUNT	0038	DCOUNT<15:0>																xxxx
DOSTARTL	003A	DOSTARTL<15:1>															0	xxxx
DOSTARTH	003C	—	—	—	—	—	—	—	—	—	—	DOSTARTH<5:0>						00xx
DOENDL	003E	DOENDL<15:1>															0	xxxx
DOENDH	0040	—	—	—	—	—	—	—	—	—	—	DOENDH						00xx
SR	0042	OA	OB	SA	SB	OAB	SAB	DA	DC	IPL<2:0>			RA	N	OV	Z	C	0000

Legend: x = unknown value on Reset, — = unimplemented, read as '0'. Reset values are shown in hexadecimal.

© 2011-2012 Microchip Technology Inc.

TABLE 4-1: CPU CORE REGISTER MAP (CONTINUED)

SFR Name	SFR Addr	Bit 15	Bit 14	Bit 13	Bit 12	Bit 11	Bit 10	Bit 9	Bit 8	Bit 7	Bit 6	Bit 5	Bit 4	Bit 3	Bit 2	Bit 1	Bit 0	All Resets
CORCON	0044	—	—	—	US	EDT	DL<2:0>			SATA	SATB	SATDW	ACCSAT	IPL3	PSV	RND	IF	0020
MODCON	0046	XMODEN	YMODEN	—	—	BWM<3:0>				YWM<3:0>				XWM<3:0>				0000
XMODSRT	0048	XS<15:1>															0	xxxx
XMODEND	004A	XE<15:1>															1	xxxx
YMODSRT	004C	YS<15:1>															0	xxxx
YMODEND	004E	YE<15:1>															1	xxxx
XBREV	0050	BREN	XB<14:0>															xxxx
DISICNT	0052	—	—	Disable Interrupts Counter Register														xxxx

Legend: x = unknown value on Reset, — = unimplemented, read as '0'. Reset values are shown in hexadecimal.

© 2011-2012 Microchip Technology Inc.

TABLE 4-2: CHANGE NOTIFICATION REGISTER MAP FOR dsPIC33FJ06GS001 AND dsPIC33FJ06GS101A

File Name	SFR Addr	Bit 15	Bit 14	Bit 13	Bit 12	Bit 11	Bit 10	Bit 9	Bit 8	Bit 7	Bit 6	Bit 5	Bit 4	Bit 3	Bit 2	Bit 1	Bit 0	All Resets
CNEN1	0060	—	—	—	—	—	—	—	—	CN7IE	CN6IE	CN5IE	CN4IE	CN3IE	CN2IE	CN1IE	CN0IE	0000
CNPU1	0068	—	—	—	—	—	—	—	—	CN7PUE	CN6PUE	CN5PUE	CN4PUE	CN3PUE	CN2PUE	CN1PUE	CN0PUE	0000

Legend: x = unknown value on Reset, — = unimplemented, read as '0'. Reset values are shown in hexadecimal.

TABLE 4-3: CHANGE NOTIFICATION REGISTER MAP FOR dsPIC33FJ06GS102A, dsPIC33FJ06GS202A, AND dsPIC33FJ09GS302

File Name	SFR Addr	Bit 15	Bit 14	Bit 13	Bit 12	Bit 11	Bit 10	Bit 9	Bit 8	Bit 7	Bit 6	Bit 5	Bit 4	Bit 3	Bit 2	Bit 1	Bit 0	All Resets
CNEN1	0060	CN15IE	CN14IE	CN13IE	CN12IE	CN11IE	CN10IE	CN9IE	CN8IE	CN7IE	CN6IE	CN5IE	CN4IE	CN3IE	CN2IE	CN1IE	CN0IE	0000
CNPU1	0068	CN15PUE	CN14PUE	CN13PUE	CN12PUE	CN11PUE	CN10PUE	CN9PUE	CN8PUE	CN7PUE	CN6PUE	CN5PUE	CN4PUE	CN3PUE	CN2PUE	CN1PUE	CN0PUE	0000

Legend: x = unknown value on Reset, — = unimplemented, read as '0'. Reset values are shown in hexadecimal.

© 2011-2012 Microchip Technology Inc.

TABLE 4-4: INTERRUPT CONTROLLER REGISTER MAP FOR dsPIC33FJ06GS001 DEVICES ONLY

File Name	SFR Addr.	Bit 15	Bit 14	Bit 13	Bit 12	Bit 11	Bit 10	Bit 9	Bit 8	Bit 7	Bit 6	Bit 5	Bit 4	Bit 3	Bit 2	Bit 1	Bit 0	All Resets
INTCON1	0080	NSTDIS	OVAERR	OVBERR	COVAERR	COVBERR	OVATE	OVBTE	COVTE	SFTACERR	DIV0ERR	—	MATHERR	ADDRERR	STKERR	OSCFAIL	—	0000
INTCON2	0082	ALTIVT	DISI	—	—	—	—	—	—	—	—	—	—	—	INT2EP	INT1EP	INT0EP	0000
IFS0	0084	—	—	ADIF	—	—	—	—	—	T2IF	—	—	—	T1IF	—	—	INT0IF	0000
IFS1	0086	—	—	INT2IF	—	—	—	—	—	—	—	—	INT1IF	CNIF	AC1IF	MI2C1IF	SI2C1IF	0000
IFS3	008A	—	—	—	—	—	—	PSEMIF	—	—	—	—	—	—	—	—	—	0000
IFS4	008C	—	—	—	—	—	—	—	—	—	—	—	—	—	—	—	—	0000
IFS5	008E	—	PWM1IF	—	—	—	—	—	—	—	—	—	—	—	—	—	JTAGIF	0000
IFS6	0090	ADCP1IF	ADCP0IF	—	—	—	—	—	—	AC2IF	—	—	—	—	—	PWM4IF	—	0000
IFS7	0092	—	—	—	—	—	—	—	—	—	—	—	ADCP6IF	—	—	ADCP3IF	—	0000
IEC0	0094	—	—	ADIE	—	—	—	—	—	T2IE	—	—	—	T1IE	—	—	INT0IE	0000
IEC1	0096	—	—	INT2IE	—	—	—	—	—	—	—	—	INT1IE	CNIE	AC1IE	MI2C1IE	SI2C1IE	0000
IEC3	009A	—	—	—	—	—	—	PSEMIE	—	—	—	—	—	—	—	—	—	0000
IEC4	009C	—	—	—	—	—	—	—	—	—	—	—	—	—	—	—	—	0000
IEC5	009E	—	PWM1IE	—	—	—	—	—	—	—	—	—	—	—	—	—	JTAGIE	0000
IEC6	00A0	ADCP1IE	ADCP0IE	—	—	—	—	—	—	AC2IE	—	—	—	—	—	PWM4IE	—	0000
IEC7	00A2	—	—	—	—	—	—	—	—	—	—	—	ADCP6IE	—	—	ADCP3IE	—	0000
IPC0	00A4	—	T1IP<2:0>			—	—	—	—	—	—	—	—	—	INT0IP<2:0>			4004
IPC1	00A6	—	T2IP<2:0>			—	—	—	—	—	—	—	—	—	—	—	—	4000
IPC3	00AA	—	—	—	—	—	—	—	—	—	ADIP<2:0>			—	—	—	—	0040
IPC4	00AC	—	CNIP<2:0>			—	AC1IP<2:0>			—	MI2C1IP<2:0>			—	SI2C1IP<2:0>			4444
IPC5	00AE	—	—	—	—	—	—	—	—	—	—	—	—	—	INT1IP<2:0>			0004
IPC7	00B2	—	—	—	—	—	—	—	—	—	INT2IP<2:0>			—	—	—	—	0040
IPC14	00C0	—	—	—	—	—	—	—	—	—	PSEMIP<2:0>			—	—	—	—	0040
IPC20	00CC	—	—	—	—	—	—	—	—	—	—	—	—	—	JTAGIP<2:0>			0004
IPC23	00D2	—	—	—	—	—	PWM1IP<2:0>			—	—	—	—	—	—	—	—	0400
IPC24	00D4	—	—	—	—	—	—	—	—	—	PWM4IP<2:0>			—	—	—	—	0040
IPC25	00D6	—	AC2IP<2:0>			—	—	—	—	—	—	—	—	—	—	—	—	4400
IPC27	00DA	—	ADCP1IP<2:0>			—	ADCP0IP<2:0>			—	—	—	—	—	—	—	—	4000
IPC28	00DC	—	—	—	—	—	—	—	—	—	ADCP3IP<2:0>			—	—	—	—	0040
IPC29	00DE	—	—	—	—	—	—	—	—	—	—	—	—	—	ADCP6IP<2:0>			0004
INTTREG	00E0	—	—	—	—	ILR<3:0>				—	VECNUM<6:0>							0000

Legend: x = unknown value on Reset, — = unimplemented, read as '0'. Reset values are shown in hexadecimal.

© 2011-2012 Microchip Technology Inc.

TABLE 4-5: INTERRUPT CONTROLLER REGISTER MAP FOR dsPIC33FJ06GS101A DEVICES ONLY

File Name	SFR Addr.	Bit 15	Bit 14	Bit 13	Bit 12	Bit 11	Bit 10	Bit 9	Bit 8	Bit 7	Bit 6	Bit 5	Bit 4	Bit 3	Bit 2	Bit 1	Bit 0	All Resets
INTCON1	0080	NSTDIS	OVAERR	OVBERR	COVAERR	COVBERR	OVATE	OVBTE	COVTE	SFTACERR	DIV0ERR	—	MATHERR	ADDRERR	STKERR	OSCFAIL	—	0000
INTCON2	0082	ALTIVT	DISI	—	—	—	—	—	—	—	—	—	—	—	INT2EP	INT1EP	INT0EP	0000
IFS0	0084	—	—	ADIF	U1TXIF	U1RXIF	SPI1IF	SPI1EIF	—	T2IF	—	—	—	T1IF	OC1IF	—	INT0IF	0000
IFS1	0086	—	—	INT2IF	—	—	—	—	—	—	—	—	INT1IF	CNIF	—	MI2C1IF	SI2C1IF	0000
IFS3	008A	—	—	—	—	—	—	PSEMIF	—	—	—	—	—	—	—	—	—	0000
IFS4	008C	—	—	—	—	—	—	—	—	—	—	—	—	—	—	U1EIF	—	0000
IFS5	008E	—	PWM1IF	—	—	—	—	—	—	—	—	—	—	—	—	—	JTAGIF	0000
IFS6	0090	ADCP1IF	ADCP0IF	—	—	—	—	—	—	—	—	—	—	—	—	PWM4IF	—	0000
IFS7	0092	—	—	—	—	—	—	—	—	—	—	—	—	—	—	ADCP3IF	—	0000
IEC0	0094	—	—	ADIE	U1TXIE	U1RXIE	SPI1IE	SPI1EIE	—	T2IE	—	—	—	T1IE	OC1IE	—	INT0IE	0000
IEC1	0096	—	—	INT2IE	—	—	—	—	—	—	—	—	INT1IE	CNIE	—	MI2C1IE	SI2C1IE	0000
IEC3	009A	—	—	—	—	—	—	PSEMIE	—	—	—	—	—	—	—	—	—	0000
IEC4	009C	—	—	—	—	—	—	—	—	—	—	—	—	—	—	U1EIE	—	0000
IEC5	009E	—	PWM1IE	—	—	—	—	—	—	—	—	—	—	—	—	—	JTAGIE	0000
IEC6	00A0	ADCP1IE	ADCP0IE	—	—	—	—	—	—	—	—	—	—	—	—	PWM4IE	—	0000
IEC7	00A2	—	—	—	—	—	—	—	—	—	—	—	—	—	—	ADCP3IE	—	0000
IPC0	00A4	—	T1IP<2:0>			—	OC1IP<2:0>			—	—	—	—	—	INT0IP<2:0>			4404
IPC1	00A6	—	T2IP<2:0>			—	—	—	—	—	—	—	—	—	—	—	—	4000
IPC2	00A8	—	U1RXIP<2:0>			—	SPI1IP<2:0>			—	SPI1EIP<2:0>			—	—	—	—	4440
IPC3	00AA	—	—	—	—	—	—	—	—	—	ADIP<2:0>			—	U1TXIP<2:0>			0044
IPC4	00AC	—	CNIP<2:0>			—	—	—	—	—	MI2C1IP<2:0>			—	SI2C1IP<2:0>			4044
IPC5	00AE	—	—	—	—	—	—	—	—	—	—	—	—	—	INT1IP<2:0>			0004
IPC7	00B2	—	—	—	—	—	—	—	—	—	INT2IP<2:0>			—	—	—	—	0040
IPC14	00C0	—	—	—	—	—	—	—	—	—	PSEMIP<2:0>			—	—	—	—	0040
IPC16	00C4	—	—	—	—	—	—	—	—	—	U1EIP<2:0>			—	—	—	—	0040
IPC20	00CC	—	—	—	—	—	—	—	—	—	—	—	—	—	JTAGIP<2:0>			0004
IPC23	00D2	—	—	—	—	—	PWM1IP<2:0>			—	—	—	—	—	—	—	—	0400
IPC24	00D4	—	—	—	—	—	—	—	—	—	PWM4IP<2:0>			—	—	—	—	0040
IPC27	00DA	—	ADCP1IP<2:0>			—	ADCP0IP<2:0>			—	—	—	—	—	—	—	—	4400
IPC28	00DC	—	—	—	—	—	—	—	—	—	ADCP3IP<2:0>			—	—	—	—	0040
INTTREG	00E0	—	—	—	—	ILR<3:0>				—	VECNUM<6:0>							0000

Legend: x = unknown value on Reset, — = unimplemented, read as '0'. Reset values are shown in hexadecimal.

© 2011-2012 Microchip Technology Inc.

TABLE 4-6: INTERRUPT CONTROLLER REGISTER MAP FOR dsPIC33FJ06GS102A DEVICES ONLY

File Name	SFR Addr.	Bit 15	Bit 14	Bit 13	Bit 12	Bit 11	Bit 10	Bit 9	Bit 8	Bit 7	Bit 6	Bit 5	Bit 4	Bit 3	Bit 2	Bit 1	Bit 0	All Resets
INTCON1	0080	NSTDIS	OVAERR	OVBERR	COVAERR	COVBERR	OVATE	OVBTE	COVTE	SFTACERR	DIV0ERR	—	MATHERR	ADDRERR	STKERR	OSCFAIL	—	0000
INTCON2	0082	ALTIVT	DISI	—	—	—	—	—	—	—	—	—	—	—	INT2EP	INT1EP	INT0EP	0000
IFS0	0084	—	—	ADIF	U1TXIF	U1RXIF	SPI1IF	SPI1EIF	—	T2IF	—	—	—	T1IF	OC1IF	—	INT0IF	0000
IFS1	0086	—	—	INT2IF	—	—	—	—	—	—	—	—	INT1IF	CNIF	—	MI2C1IF	SI2C1IF	0000
IFS3	008A	—	—	—	—	—	—	PSEMIF	—	—	—	—	—	—	—	—	—	0000
IFS4	008C	—	—	—	—	—	—	—	—	—	—	—	—	—	—	U1EIF	—	0000
IFS5	008E	PWM2IF	PWM1IF	—	—	—	—	—	—	—	—	—	—	—	—	—	JTAGIF	0000
IFS6	0090	ADCP1IF	ADCP0IF	—	—	—	—	—	—	—	—	—	—	—	—	—	—	0000
IFS7	0092	—	—	—	—	—	—	—	—	—	—	—	—	—	—	—	ADCP2IF	0000
IEC0	0094	—	—	ADIE	U1TXIE	U1RXIE	SPI1IE	SPI1EIE	—	T2IE	—	—	—	T1IE	OC1IE	—	INT0IE	0000
IEC1	0096	—	—	INT2IE	—	—	—	—	—	—	—	—	INT1IE	CNIE	—	MI2C1IE	SI2C1IE	0000
IEC3	009A	—	—	—	—	—	—	PSEMIE	—	—	—	—	—	—	—	—	—	0000
IEC4	009C	—	—	—	—	—	—	—	—	—	—	—	—	—	—	U1EIE	—	0000
IEC5	009E	PWM2IE	PWM1IE	—	—	—	—	—	—	—	—	—	—	—	—	—	JTAGIE	0000
IEC6	00A0	ADCP1IE	ADCP0IE	—	—	—	—	—	—	—	—	—	—	—	—	—	—	0000
IEC7	00A2	—	—	—	—	—	—	—	—	—	—	—	—	—	—	—	ADCP2IE	0000
IPC0	00A4	—	T1IP<2:0>			—	OC1IP<2:0>			—	—	—	—	—	INT0IP<2:0>			4404
IPC1	00A6	—	T2IP<2:0>			—	—	—	—	—	—	—	—	—	—	—	—	4000
IPC2	00A8	—	U1RXIP<2:0>			—	SPI1IP<2:0>			—	SPI1EIP<2:0>			—	—	—	—	4440
IPC3	00AA	—	—	—	—	—	—	—	—	—	ADIP<2:0>			—	U1TXIP<2:0>			0044
IPC4	00AC	—	CNIP<2:0>			—	—	—	—	—	MI2C1IP<2:0>			—	SI2C1IP<2:0>			4044
IPC5	00AE	—	—	—	—	—	—	—	—	—	—	—	—	—	INT1IP<2:0>			0004
IPC7	00B2	—	—	—	—	—	—	—	—	—	INT2IP<2:0>			—	—	—	—	0040
IPC14	00C0	—	—	—	—	—	—	—	—	—	PSEMIP<2:0>			—	—	—	—	0040
IPC16	00C4	—	—	—	—	—	—	—	—	—	U1EIP<2:0>			—	—	—	—	0040
IPC20	00CC	—	—	—	—	—	—	—	—	—	—	—	—	—	JTAGIP<2:0>			0004
IPC23	00D2	—	PWM2IP<2:0>			—	PWM1IP<2:0>			—	—	—	—	—	—	—	—	4400
IPC27	00DA	—	ADCP1IP<2:0>			—	ADCP0IP<2:0>			—	—	—	—	—	—	—	—	4400
IPC28	00DC	—	—	—	—	—	—	—	—	—	—	—	—	—	ADCP2IP<2:0>			0004
INTTREG	00E0	—	—	—	—	ILR<3:0>				—	VECNUM<6:0>							0000

Legend: x = unknown value on Reset, — = unimplemented, read as '0'. Reset values are shown in hexadecimal.

© 2011-2012 Microchip Technology Inc.

TABLE 4-7: INTERRUPT CONTROLLER REGISTER MAP FOR dsPIC33FJ06GS202A DEVICES ONLY

File Name	SFR Addr.	Bit 15	Bit 14	Bit 13	Bit 12	Bit 11	Bit 10	Bit 9	Bit 8	Bit 7	Bit 6	Bit 5	Bit 4	Bit 3	Bit 2	Bit 1	Bit 0	All Resets
INTCON1	0080	NSTDIS	OVAERR	OVBERR	COVAERR	COVBERR	OVATE	OVBTE	COVTE	SFTACERR	DIV0ERR	—	MATHERR	ADDRERR	STKERR	OSCFAIL	—	0000
INTCON2	0082	ALTIVT	DISI	—	—	—	—	—	—	—	—	—	—	—	INT2EP	INT1EP	INT0EP	0000
IFS0	0084	—	—	ADIF	U1TXIF	U1RXIF	SPI1IF	SPI1EIF	—	T2IF	—	—	—	T1IF	OC1IF	IC1IF	INT0IF	0000
IFS1	0086	—	—	INT2IF	—	—	—	—	—	—	—	—	INT1IF	CNIF	AC1IF	MI2C1IF	SI2C1IF	0000
IFS3	008A	—	—	—	—	—	—	PSEMIF	—	—	—	—	—	—	—	—	—	0000
IFS4	008C	—	—	—	—	—	—	—	—	—	—	—	—	—	—	U1EIF	—	0000
IFS5	008E	PWM2IF	PWM1IF	—	—	—	—	—	—	—	—	—	—	—	—	—	JTAGIF	0000
IFS6	0090	ADCP1IF	ADCP0IF	—	—	—	—	—	—	AC2IF	—	—	—	—	—	—	—	0000
IFS7	0092	—	—	—	—	—	—	—	—	—	—	—	ADCP6IF	—	—	—	ADCP2IF	0000
IEC0	0094	—	—	ADIE	U1TXIE	U1RXIE	SPI1IE	SPI1EIE	—	T2IE	—	—	—	T1IE	OC1IE	IC1IE	INT0IE	0000
IEC1	0096	—	—	INT2IE	—	—	—	—	—	—	—	—	INT1IE	CNIE	AC1IE	MI2C1IE	SI2C1IE	0000
IEC3	009A	—	—	—	—	—	—	PSEMIE	—	—	—	—	—	—	—	—	—	0000
IEC4	009C	—	—	—	—	—	—	—	—	—	—	—	—	—	—	U1EIE	—	0000
IEC5	009E	PWM2IE	PWM1IE	—	—	—	—	—	—	—	—	—	—	—	—	—	JTAGIE	0000
IEC6	00A0	ADCP1IE	ADCP0IE	—	—	—	—	—	—	AC2IE	—	—	—	—	—	—	—	0000
IEC7	00A2	—	—	—	—	—	—	—	—	—	—	—	ADCP6IE	—	—	—	ADCP2IE	0000
IPC0	00A4	—	T1IP<2:0>			—	OC1IP<2:0>			—	IC1IP<2:0>			—	INT0IP<2:0>			4444
IPC1	00A6	—	T2IP<2:0>			—	—	—	—	—	—	—	—	—	—	—	—	4000
IPC2	00A8	—	U1RXIP<2:0>			—	SPI1IP<2:0>			—	SPI1EIP<2:0>			—	—	—	—	4440
IPC3	00AA	—	—	—	—	—	—	—	—	—	ADIP<2:0>			—	U1TXIP<2:0>			0044
IPC4	00AC	—	CNIP<2:0>			—	AC1IP<2:0>			—	MI2C1IP<2:0>			—	SI2C1IP<2:0>			4444
IPC5	00AE	—	—	—	—	—	—	—	—	—	—	—	—	—	INT1IP<2:0>			0004
IPC7	00B2	—	—	—	—	—	—	—	—	—	INT2IP<2:0>			—	—	—	—	0040
IPC14	00C0	—	—	—	—	—	—	—	—	—	PSEMIP<2:0>			—	—	—	—	0040
IPC16	00C4	—	—	—	—	—	—	—	—	—	U1EIP<2:0>			—	—	—	—	0040
IPC20	00CC	—	—	—	—	—	—	—	—	—	—	—	—	—	JTAGIP<2:0>			0004
IPC23	00D2	—	PWM2IP<2:0>			—	PWM1IP<2:0>			—	—	—	—	—	—	—	—	4400
IPC25	00D6	—	AC2IP<2:0>			—	—	—	—	—	—	—	—	—	—	—	—	4000
IPC27	00DA	—	ADCP1IP<2:0>			—	ADCP0IP<2:0>			—	—	—	—	—	—	—	—	4400
IPC28	00DC	—	—	—	—	—	—	—	—	—	—	—	—	—	ADCP2IP<2:0>			0004
IPC29	00DE	—	—	—	—	—	—	—	—	—	—	—	—	—	ADCP6IP<2:0>			0004
INTTREG	00E0	—	—	—	—	ILR<3:0>				—	VECNUM<6:0>							0000

Legend: x = unknown value on Reset, — = unimplemented, read as '0'. Reset values are shown in hexadecimal.

© 2011-2012 Microchip Technology Inc.

TABLE 4-8: INTERRUPT CONTROLLER REGISTER MAP FOR dsPIC33FJ09GS302 DEVICES ONLY

File Name	SFR Addr.	Bit 15	Bit 14	Bit 13	Bit 12	Bit 11	Bit 10	Bit 9	Bit 8	Bit 7	Bit 6	Bit 5	Bit 4	Bit 3	Bit 2	Bit 1	Bit 0	All Resets
INTCON1	0080	NSTDIS	OVAERR	OVBERR	COVAERR	COVBERR	OVATE	OVBTE	COVTE	SFTACERR	DIV0ERR	—	MATHERR	ADDRERR	STKERR	OSCFAIL	—	0000
INTCON2	0082	ALTIVT	DISI	—	—	—	—	—	—	—	—	—	—	—	INT2EP	INT1EP	INT0EP	0000
IFS0	0084	—	—	ADIF	U1TXIF	U1RXIF	SPI1IF	SPI1EIF	—	T2IF	—	—	—	T1IF	OC1IF	IC1IF	INT0IF	0000
IFS1	0086	—	—	INT2IF	—	—	—	—	—	—	—	—	INT1IF	CNIF	AC1IF	MI2C1IF	SI2C1IF	0000
IFS3	008A	—	—	—	—	—	—	PSEMIF	—	—	—	—	—	—	—	—	—	0000
IFS4	008C	—	—	—	—	—	—	—	—	—	—	—	—	—	—	U1EIF	—	0000
IFS5	008E	PWM2IF	PWM1IF	—	—	—	—	—	—	—	—	—	—	—	—	—	JTAGIF	0000
IFS6	0090	ADCP1IF	ADCP0IF	—	—	—	—	—	—	AC2IF	—	—	—	—	—	PWM4IF	—	0000
IFS7	0092	—	—	—	—	—	—	—	—	—	—	—	ADCP6IF	—	—	ADCP3IF	ADCP2IF	0000
IEC0	0094	—	—	ADIE	U1TXIE	U1RXIE	SPI1IE	SPI1EIE	—	T2IE	—	—	—	T1IE	OC1IE	IC1IE	INT0IE	0000
IEC1	0096	—	—	INT2IE	—	—	—	—	—	—	—	—	INT1IE	CNIE	AC1IE	MI2C1IE	SI2C1IE	0000
IEC3	009A	—	—	—	—	—	—	PSEMIE	—	—	—	—	—	—	—	—	—	0000
IEC4	009C	—	—	—	—	—	—	—	—	—	—	—	—	—	—	U1EIE	—	0000
IEC5	009E	PWM2IE	PWM1IE	—	—	—	—	—	—	—	—	—	—	—	—	—	JTAGIE	0000
IEC6	00A0	ADCP1IE	ADCP0IE	—	—	—	—	—	—	AC2IE	—	—	—	—	—	PWM4IE	—	0000
IEC7	00A2	—	—	—	—	—	—	—	—	—	—	—	ADCP6IE	—	—	ADCP3IE	ADCP2IE	0000
IPC0	00A4	—	T1IP<2:0>			—	OC1IP<2:0>			—	IC1IP<2:0>			—	INT0IP<2:0>			4444
IPC1	00A6	—	T2IP<2:0>			—	—	—	—	—	—	—	—	—	—	—	—	4000
IPC2	00A8	—	U1RXIP<2:0>			—	SPI1IP<2:0>			—	SPI1EIP<2:0>			—	—	—	—	4440
IPC3	00AA	—	—	—	—	—	—			—	ADIP<2:0>			—	U1TXIP<2:0>			0044
IPC4	00AC	—	CNIP<2:0>			—	AC1IP<2:0>			—	MI2C1IP<2:0>			—	SI2C1IP<2:0>			4444
IPC5	00AE	—	—	—	—	—	—	—	—	—	—	—	—	—	INT1IP<2:0>			0004
IPC7	00B2	—	—	—	—	—	—	—	—	—	INT2IP<2:0>			—	—	—	—	0040
IPC14	00C0	—	—	—	—	—	—	—	—	—	PSEMIP<2:0>			—	—	—	—	0040
IPC16	00C4	—	—	—	—	—	—	—	—	—	U1EIP<2:0>			—	—	—	—	0040
IPC20	00CC	—	—	—	—	—	—	—	—	—	—	—	—	—	JTAGIP<2:0>			0004
IPC23	00D2	—	PWM2IP<2:0>			—	PWM1IP<2:0>			—	—	—	—	—	—	—	—	4400
IPC24	00D4	—	—	—	—	—	—	—	—	—	PWM4IP<2:0>			—	—	—	—	0040
IPC25	00D6	—	AC2IP<2:0>			—	—	—	—	—	—	—	—	—	—	—	—	4000
IPC27	00DA	—	ADCP1IP<2:0>			—	ADCP0IP<2:0>			—	—			—	—	—	—	4400
IPC28	00DC	—	—	—	—	—	—	—	—	—	ADCP3IP<2:0>			—	ADCP2IP<2:0>			0044
IPC29	00DE	—	—	—	—	—	—	—	—	—	—	—	—	—	ADCP6IP<2:0>			0004
INTTREG	00E0	—	—	—	—	ILR<3:0>				—	VECNUM<6:0>							0000

Legend: x = unknown value on Reset, — = unimplemented, read as '0'. Reset values are shown in hexadecimal.

© 2011-2012 Microchip Technology Inc.

TABLE 4-9: TIMER REGISTER MAP

SFR Name	SFR Addr	Bit 15	Bit 14	Bit 13	Bit 12	Bit 11	Bit 10	Bit 9	Bit 8	Bit 7	Bit 6	Bit 5	Bit 4	Bit 3	Bit 2	Bit 1	Bit 0	All Resets
TMR1	0100	Timer1 Register																0000
PR1	0102	Period Register 1																FFFF
T1CON	0104	TON	—	TSIDL	—	—	—	—	—	—	TGATE	TCKPS<1:0>		—	TSYNC	TCS	—	0000
TMR2	0106	Timer2 Register																0000
PR2	010C	Period Register 2																FFFF
T2CON	0110	TON	—	TSIDL	—	—	—	—	—	—	TGATE	TCKPS<1:0>		—	—	TCS	—	0000

Legend: x = unknown value on Reset, — = unimplemented, read as '0'. Reset values are shown in hexadecimal.

TABLE 4-10: INPUT CAPTURE REGISTER MAP FOR dsPIC33FJ06GS202A AND dsPIC33FJ09GS302

SFR Name	SFR Addr	Bit 15	Bit 14	Bit 13	Bit 12	Bit 11	Bit 10	Bit 9	Bit 8	Bit 7	Bit 6	Bit 5	Bit 4	Bit 3	Bit 2	Bit 1	Bit 0	All Resets
IC1BUF	0140	Input Capture 1 Register																xxxx
IC1CON	0142	—	—	ICSIDL	—	—	—	—	—	—	ICI<1:0>		ICOV	ICBNE	ICM<2:0>			0000

Legend: x = unknown value on Reset, — = unimplemented, read as '0'. Reset values are shown in hexadecimal.

TABLE 4-11: OUTPUT COMPARE REGISTER MAP FOR dsPIC33FJ06GS101A, dsPIC33FJ06GS102A, dsPIC33FJ06GS202A AND dsPIC33FJ09GS302

SFR Name	SFR Addr	Bit 15	Bit 14	Bit 13	Bit 12	Bit 11	Bit 10	Bit 9	Bit 8	Bit 7	Bit 6	Bit 5	Bit 4	Bit 3	Bit 2	Bit 1	Bit 0	All Resets
OC1RS	0180	Output Compare 1 Secondary Register																xxxx
OC1R	0182	Output Compare 1 Register																xxxx
OC1CON	0184	—	—	OCSIDL	—	—	—	—	—	—	—	—	OCFLT	—	OCM<2:0>			0000

Legend: x = unknown value on Reset, — = unimplemented, read as '0'. Reset values are shown in hexadecimal.

© 2011-2012 Microchip Technology Inc.

TABLE 4-12: HIGH-SPEED PWM REGISTER MAP

File Name	Addr Offset	Bit 15	Bit 14	Bit 13	Bit 12	Bit 11	Bit 10	Bit 9	Bit 8	Bit 7	Bit 6	Bit 5	Bit 4	Bit 3	Bit 2	Bit 1	Bit 0	All Resets
PTCON	0400	PTEN	—	PTSIDL	SESTAT	SEIEN	EIPU	SYNCPOL	SYNCOEN	SYNCEN	—	SYNCSRC<1:0>		SEVTPS<3:0>				0000
PTCON2	0402	—	—	—	—	—	—	—	—	—	—	—	—	—	PCLKDIV<2:0>			0000
PTPER	0404	PTPER<15:0>																FFF8
SEVTCMP	0406	SEVTCMP<15:3>													—	—	—	0000
MDC	040A	MDC<15:0>																0000
CHOP	041A	CHPCLKEN	—	—	—	—	—	CHOPCLK<6:0>							—	—	—	0000

Legend: x = unknown value on Reset, — = unimplemented, read as '0'. Reset values are shown in hexadecimal.

TABLE 4-13: HIGH-SPEED PWM GENERATOR 1 REGISTER MAP

File Name	Addr Offset	Bit 15	Bit 14	Bit 13	Bit 12	Bit 11	Bit 10	Bit 9	Bit 8	Bit 7	Bit 6	Bit 5	Bit 4	Bit 3	Bit 2	Bit 1	Bit 0	All Resets
PWMCON1	0420	FLTSTAT	CLSTAT	TRGSTAT	FLTIEN	CLIEN	TRGIEN	ITB	MDCS	DTC<1:0>		—	—	—	CAM	XPRES	IUE	0000
IOCON1	0422	PENH	PENL	POLH	POLL	PMOD<1:0>		OVRENH	OVRENL	OVRDAT<1:0>		FLTDAT<1:0>		CLDAT<1:0>		SWAP	OSYNC	0000
FCLCON1	0424	IFLTMOD	CLSRC<4:0>					CLPOL	CLMOD	FLTSRC<4:0>					FLTPOL	FLTMOD<1:0>		0000
PDC1	0426	PDC1<15:0>																0000
PHASE1	0428	PHASE1<15:0>																0000
DTR1	042A	—	—	DTR1<13:0>														0000
ALTDTR1	042C	—	—	ALTDTR1<13:0>														0000
SDC1	042E	SDC1<15:0>																0000
SPHASE1	0430	SPHASE1<15:0>																0000
TRIG1	0432	TRGCMP<15:3>													—	—	—	0000
TRGCON1	0434	TRGDIV<3:0>				—	—	—	—	DTM	—	TRGSTRT<5:0>						0000
STRIG1	0436	STRGCMP<15:3>													—	—	—	0000
PWMCAP1	0438	PWMCAP1<15:3>													—	—	—	0000
LEBCON1	043A	PHR	PHF	PLR	PLF	FLTLEBEN	CLLEBEN	LEB<6:0>							—	—	—	0000
AUXCON1	043E	HRPDIS	HRDDIS	—	—	—	—	—	—	—	—	CHOPSEL<3:0>				CHOPHEN	CHOPLEN	0000

Legend: x = unknown value on Reset, — = unimplemented, read as '0'. Reset values are shown in hexadecimal.

© 2011-2012 Microchip Technology Inc.

TABLE 4-14: HIGH-SPEED PWM GENERATOR 2 REGISTER MAP FOR dsPIC33FJ06GS102A, dsPIC33FJ06GS202A AND dsPIC33FJ09GS302

File Name	Addr Offset	Bit 15	Bit 14	Bit 13	Bit 12	Bit 11	Bit 10	Bit 9	Bit 8	Bit 7	Bit 6	Bit 5	Bit 4	Bit 3	Bit 2	Bit 1	Bit 0	All Resets
PWMCON2	0440	FLTSTAT	CLSTAT	TRGSTAT	FLTIEN	CLIEN	TRGIEN	ITB	MDCS	DTC<1:0>		—	—	—	CAM	XPRES	IUE	0000
IOCON2	0442	PENH	PENL	POLH	POLL	PMOD<1:0>		OVRENH	OVRENL	OVRDAT<1:0>		FLTDAT<1:0>		CLDAT<1:0>		SWAP	OSYNC	0000
FCLCON2	0444	IFLTMOD	CLSRC<4:0>					CLPOL	CLMOD	FLTSRC<4:0>					FLTPOL	FLTMOD<1:0>		0000
PDC2	0446	PDC2<15:0>																0000
PHASE2	0448	PHASE2<15:0>																0000
DTR2	044A	—	—	DTR2<13:0>														0000
ALTDTR2	044C	—	—	ALTDTR2<13:0>														0000
SDC2	044E	SDC2<15:0>																0000
SPHASE2	0450	SPHASE2<15:0>																0000
TRIG2	0452	TRGCMP<15:3>													—	—	—	0000
TRGCON2	0454	TRGDIV<3:0>				—	—	—	—	DTM	—	TRGSTRT<5:0>						0000
STRIG2	0456	STRGCMP<15:3>													—	—	—	0000
PWMCAP2	0458	PWMCAP2<15:3>													—	—	—	0000
LEBCON2	045A	PHR	PHF	PLR	PLF	FLTLEBEN	CLLEBEN	LEB<6:0>							—	—	—	0000
AUXCON2	045E	HRPDIS	HRDDIS	—	—	—	—	—	—	—	—	CHOPSEL<3:0>				CHOPHEN	CHOPLEN	0000

Legend: x = unknown value on Reset, — = unimplemented, read as '0'. Reset values are shown in hexadecimal.

© 2011-2012 Microchip Technology Inc.

TABLE 4-15: HIGH-SPEED PWM GENERATOR 4 REGISTER MAP FOR dsPIC33FJ06GS001, dsPIC33FJ06GS101A AND dsPIC33FJ09GS302

File Name	Addr Offset	Bit 15	Bit 14	Bit 13	Bit 12	Bit 11	Bit 10	Bit 9	Bit 8	Bit 7	Bit 6	Bit 5	Bit 4	Bit 3	Bit 2	Bit 1	Bit 0	All Resets
PWMCON4	0480	FLTSTAT	CLSTAT	TRGSTAT	FLTIEN	CLIEN	TRGIEN	ITB	MDCS	DTC<1:0>		—	—	—	CAM	XPRES	IUE	0000
IOCON4	0482	PENH	PENL	POLH	POLL	PMOD<1:0>		OVRENH	OVRENL	OVRDAT<1:0>		FLTDAT<1:0>		CLDAT<1:0>		SWAP	OSYNC	0000
FCLCON4	0484	IFLTMOD	CLSRC<4:0>					CLPOL	CLMOD	FLTSRC<4:0>					FLTPOL	FLTMOD<1:0>		0000
PDC4	0486	PDC4<15:0>																0000
PHASE4	0488	PHASE4<15:0>																0000
DTR4	048A	—	—	DTR4<13:0>														0000
ALTDTR4	048C	—	—	ALTDTR4<13:0>														0000
SDC4	048E	SDC4<15:0>																0000
SPHASE4	0490	SPHASE4<15:0>																0000
TRIG4	0492	TRGCMP<15:3>													—	—	—	0000
TRGCON4	0494	TRGDIV<3:0>				—	—	—	—	DTM	—	TRGSTRT<5:0>						0000
STRIG4	0496	STRGCMP<15:3>													—	—	—	0000
PWMCAP4	0498	PWMCAP4<15:3>													—	—	—	0000
LEBCON4	049A	PHR	PHF	PLR	PLF	FLTLEBEN	CLLEBEN	LEB<6:0>							—	—	—	0000
AUXCON4	049E	HRPDIS	HRDDIS	—	—	—	—	—	—	—	—	CHOPSEL<3:0>				CHOPHEN	CHOPLEN	0000

Legend: x = unknown value on Reset, — = unimplemented, read as '0'. Reset values are shown in hexadecimal.

© 2011-2012 Microchip Technology Inc.

TABLE 4-16: I2C1 REGISTER MAP

SFR Name	SFR Addr	Bit 15	Bit 14	Bit 13	Bit 12	Bit 11	Bit 10	Bit 9	Bit 8	Bit 7	Bit 6	Bit 5	Bit 4	Bit 3	Bit 2	Bit 1	Bit 0	All Resets
I2C1RCV	0200	—	—	—	—	—	—	—	—	Receive Register								0000
I2C1TRN	0202	—	—	—	—	—	—	—	—	Transmit Register								00FF
I2C1BRG	0204	—	—	—	—	—	—	—	Baud Rate Generator Register									0000
I2C1CON	0206	I2CEN	—	I2CSIDL	SCLREL	IPMIEN	A10M	DISSLW	SMEN	GCEN	STREN	ACKDT	ACKEN	RCEN	PEN	RSEN	SEN	1000
I2C1STAT	0208	ACKSTAT	TRSTAT	—	—	—	BCL	GCSTAT	ADD10	IWCOL	I2COV	D_A	P	S	R_W	RBF	TBF	0000
I2C1ADD	020A	—	—	—	—	—	—	Address Register										0000
I2C1MSK	020C	—	—	—	—	—	—	AMSK<9:0>										0000

Legend: x = unknown value on Reset, — = unimplemented, read as '0'. Reset values are shown in hexadecimal.

TABLE 4-17: UART1 REGISTER MAP FOR dsPIC33FJ06GS101A, dsPIC33FJ06GS102A, dsPIC33FJ06GS202A AND dsPIC33FJ09GS302

SFR Name	SFR Addr	Bit 15	Bit 14	Bit 13	Bit 12	Bit 11	Bit 10	Bit 9	Bit 8	Bit 7	Bit 6	Bit 5	Bit 4	Bit 3	Bit 2	Bit 1	Bit 0	All Resets
U1MODE	0220	UARTEN	—	USIDL	IREN	RTSMD	—	UEN1	UEN0	WAKE	LPBACK	ABAUD	URXINV	BRGH	PDSEL<1:0>		STSEL	0000
U1STA	0222	UTXISEL1	UTXINV	UTXISEL0	—	UTXBRK	UTXEN	UTXBF	TRMT	URXISEL<1:0>		ADDEN	RIDLE	PERR	FERR	OERR	URXDA	0110
U1TXREG	0224	—	—	—	—	—	—	—	UART Transmit Register									xxxx
U1RXREG	0226	—	—	—	—	—	—	—	UART Receive Register									0000
U1BRG	0228	Baud Rate Generator Prescaler																0000

Legend: x = unknown value on Reset, — = unimplemented, read as '0'. Reset values are shown in hexadecimal.

TABLE 4-18: SPI1 REGISTER MAP FOR dsPIC33FJ06GS101A, dsPIC33FJ06GS102A, dsPIC33FJ06GS202A AND dsPIC33FJ09GS302

SFR Name	SFR Addr	Bit 15	Bit 14	Bit 13	Bit 12	Bit 11	Bit 10	Bit 9	Bit 8	Bit 7	Bit 6	Bit 5	Bit 4	Bit 3	Bit 2	Bit 1	Bit 0	All Resets
SPI1STAT	0240	SPIEN	—	SPISIDL	—	—	—	—	—	—	SPIROV	—	—	—	—	SPITBF	SPIRBF	0000
SPI1CON1	0242	—	—	—	DISSCK	DISSDO	MODE16	SMP	CKE	SSEN	CKP	MSTEN	SPRE<2:0>			PPRE<1:0>		0000
SPI1CON2	0244	FRMEN	SPIFSD	FRMPOL	—	—	—	—	—	—	—	—	—	—	—	FRMDLY	—	0000
SPI1BUF	0248	SPI1 Transmit and Receive Buffer Register																0000

Legend: x = unknown value on Reset, — = unimplemented, read as '0'. Reset values are shown in hexadecimal.

© 2011-2012 Microchip Technology Inc.

TABLE 4-19: CONSTANT CURRENT SOURCE REGISTER MAP

File Name	ADR	Bit 15	Bit 14	Bit 13	Bit 12	Bit 11	Bit 10	Bit 9	Bit 8	Bit 7	Bit 6	Bit 5	Bit 4	Bit 3	Bit 2	Bit 1	Bit 0	All Resets
ISRCCON	0500	ISRCEN	—	—	—	—	OUTSEL<2:0>			—	—	ISRCCAL<5:0>						0000

Legend: x = unknown value on Reset, — = unimplemented, read as '0'. Reset values are shown in hexadecimal.

TABLE 4-20: HIGH-SPEED 10-BIT ADC REGISTER MAP FOR dsPIC33FJ06GS001 AND dsPIC33FJ06GS101A

SFR Name	SFR Addr	Bit 15	Bit 14	Bit 13	Bit 12	Bit 11	Bit 10	Bit 9	Bit 8	Bit 7	Bit 6	Bit 5	Bit 4	Bit 3	Bit 2	Bit 1	Bit 0	All Resets
ADCON	0300	ADON	—	ADSIDL	SLOWCLK	—	GSWTRG	—	FORM	EIE	ORDER	SEQSAMP	ASYNCSAMP	—	ADCS<2:0>			0003
ADPCFG	0302	—	—	—	—	—	—	—	—	PCFG7	PCFG6	—	—	PCFG3	PCFG2	PCFG1	PCFG0	0000
ADSTAT	0306	—	—	—	—	—	—	—	—	—	P6RDY	—	—	P3RDY	—	P1RDY	P0RDY	0000
ADBASE	0308	ADBASE<15:1>															—	0000
ADCPC0	030A	IRQEN1	PEND1	SWTRG1	TRGSRC1<4:0>					IRQEN0	PEND0	SWTRG0	TRGSRC0<4:0>					0000
ADCPC1	030C	IRQEN3	PEND3	SWTRG3	TRGSRC3<4:0>					—	—	—	—	—	—	—	—	0000
ADCPC3	0310	—	—	—	—	—	—	—	—	IRQEN6	PEND6	SWTRG6	TRGSRC6<4:0>					0000
ADCBUF0	0320	ADC Data Buffer 0																xxxx
ADCBUF1	0322	ADC Data Buffer 1																xxxx
ADCBUF2	0324	ADC Data Buffer 2																xxxx
ADCBUF3	0326	ADC Data Buffer 3																xxxx
ADCBUF6	032C	ADC Data Buffer 6																xxxx
ADCBUF7	032E	ADC Data Buffer 7																xxxx
ADCBUF12	0338	ADC Data Buffer 12																xxxx
ADCBUF13	033A	ADC Data Buffer 13																xxxx

Legend: x = unknown value on Reset, — = unimplemented, read as '0'. Reset values are shown in hexadecimal.

© 2011-2012 Microchip Technology Inc.

TABLE 4-21: HIGH-SPEED 10-BIT ADC REGISTER MAP FOR dsPIC33FJ06GS102A AND dsPIC33FJ06GS202A

SFR Name	SFR Addr	Bit 15	Bit 14	Bit 13	Bit 12	Bit 11	Bit 10	Bit 9	Bit 8	Bit 7	Bit 6	Bit 5	Bit 4	Bit 3	Bit 2	Bit 1	Bit 0	All Resets
ADCON	0300	ADON	—	ADSIDL	SLOWCLK	—	GSWTRG	—	FORM	EIE	ORDER	SEQSAMP	ASYNCSAMP	—	ADCS<2:0>			0003
ADPCFG	0302	—	—	—	—	—	—	—	—	—	—	PCFG5	PCFG4	PCFG3	PCFG2	PCFG1	PCFG0	0000
ADSTAT	0306	—	—	—	—	—	—	—	—	—	P6RDY	—	—	—	P2RDY	P1RDY	P0RDY	0000
ADBASE	0308	ADBASE<15:1>															—	0000
ADCPC0	030A	IRQEN1	PEND1	SWTRG1	TRGSRC1<4:0>					IRQEN0	PEND0	SWTRG0	TRGSRC0<4:0>					0000
ADCPC1	030C	—	—	—	—	—	—	—	—	IRQEN2	PEND2	SWTRG2	TRGSRC2<4:0>					0000
ADCPC3	0310	—	—	—	—	—	—	—	—	IRQEN6	PEND6	SWTRG6	TRGSRC6<4:0>					0000
ADCBUF0	0320	ADC Data Buffer 0																xxxx
ADCBUF1	0322	ADC Data Buffer 1																xxxx
ADCBUF2	0324	ADC Data Buffer 2																xxxx
ADCBUF3	0326	ADC Data Buffer 3																xxxx
ADCBUF4	0328	ADC Data Buffer 4																xxxx
ADCBUF5	032A	ADC Data Buffer 5																xxxx
ADCBUF12	0338	ADC Data Buffer 12																xxxx
ADCBUF13	033A	ADC Data Buffer 13																xxxx

Legend: x = unknown value on Reset, — = unimplemented, read as '0'. Reset values are shown in hexadecimal.

© 2011-2012 Microchip Technology Inc.

TABLE 4-22: HIGH-SPEED 10-BIT ADC REGISTER MAP FOR dsPIC33FJ09GS302

SFR Name	SFR Addr	Bit 15	Bit 14	Bit 13	Bit 12	Bit 11	Bit 10	Bit 9	Bit 8	Bit 7	Bit 6	Bit 5	Bit 4	Bit 3	Bit 2	Bit 1	Bit 0	All Resets
ADCON	0300	ADON	—	ADSIDL	SLOWCLK	—	GSWTRG	—	FORM	EIE	ORDER	SEQSAMP	ASYNCSAMP	—	ADCS<2:0>			0003
ADPCFG	0302	—	—	—	—	—	—	—	—	PCFG7	PCFG6	PCFG5	PCFG4	PCFG3	PCFG2	PCFG1	PCFG0	0000
ADSTAT	0306	—	—	—	—	—	—	—	—	—	P6RDY	—	—	P3RDY	P2RDY	P1RDY	P0RDY	0000
ADBASE	0308	ADBASE<15:1>															—	0000
ADCPC0	030A	IRQEN1	PEND1	SWTRG1	TRGSRC1<4:0>					IRQEN0	PEND0	SWTRG0	TRGSRC0<4:0>					0000
ADCPC1	030C	IRQEN3	PEND3	SWTRG3	TRGSRC3<4:0>					IRQEN2	PEND2	SWTRG2	TRGSRC2<4:0>					0000
ADCPC3	0310	—	—	—	—	—	—	—	—	IRQEN6	PEND6	SWTRG6	TRGSRC6<4:0>					0000
ADCBUF0	0320	ADC Data Buffer 0																xxxx
ADCBUF1	0322	ADC Data Buffer 1																xxxx
ADCBUF2	0324	ADC Data Buffer 2																xxxx
ADCBUF3	0326	ADC Data Buffer 3																xxxx
ADCBUF4	0328	ADC Data Buffer 4																xxxx
ADCBUF5	032A	ADC Data Buffer 5																xxxx
ADCBUF6	032C	ADC Data Buffer 6																xxxx
ADCBUF7	032E	ADC Data Buffer 7																xxxx
ADCBUF12	0338	ADC Data Buffer 12																xxxx
ADCBUF13	033A	ADC Data Buffer 13																xxxx

Legend: x = unknown value on Reset, — = unimplemented, read as '0'. Reset values are shown in hexadecimal.

TABLE 4-23: ANALOG COMPARATOR CONTROL REGISTER MAP FOR dsPIC33FJ06GS001, dsPIC33FJ06GS202A AND dsPIC33FJ09GS302

File Name	ADR	Bit 15	Bit 14	Bit 13	Bit 12	Bit 11	Bit 10	Bit 9	Bit 8	Bit 7	Bit 6	Bit 5	Bit 4	Bit 3	Bit 2	Bit 1	Bit 0	All Resets
CMPCON1	0540	CMPON	—	CMPSIDL	HYSSEL<1:0>		FLTREN	FCLKSEL	DACOE(1)	INSEL<1:0>		EXTREF	HYSPOL	CMPSTAT	HGAIN	CMPPOL	RANGE	0000
CMPDAC1	0542	—	—	—	—	—	—	CMREF<9:0>										0000
CMPCON2	0544	CMPON	—	CMPSIDL	HYSSEL<1:0>		FLTREN	FCLKSEL	DACOE(1)	INSEL<1:0>		EXTREF	HYSPOL	CMPSTAT	HGAIN	CMPPOL	RANGE	0000
CMPDAC2	0546	—	—	—	—	—	—	CMREF<9:0>										0000

Legend: x = unknown value on Reset, — = unimplemented, read as '0'. Reset values are shown in hexadecimal.

Note 1: This bit is not available in the dsPIC33FJ06GS001 device.

© 2011-2012 Microchip Technology Inc.

TABLE 4-24: PERIPHERAL PIN SELECT INPUT REGISTER MAP FOR dsPIC33FJ06GS001

SFR Name	SFR Addr	Bit 15	Bit 14	Bit 13	Bit 12	Bit 11	Bit 10	Bit 9	Bit 8	Bit 7	Bit 6	Bit 5	Bit 4	Bit 3	Bit 2	Bit 1	Bit 0	All Resets
RPINR0	0680	—	—	INT1R<5:0>						—	—	—	—	—	—	—	—	3F00
RPINR1	0682	—	—	—	—	—	—	—	—	—	—	INT2R<5:0>						003F
RPINR2	0684	—	—	T1CKR<5:0>						—	—	—	—	—	—	—	—	3F00
RPINR3	0686	—	—	—	—	—	—	—	—	—	—	T2CKR<5:0>						003F
RPINR29	06BA	—	—	FLT1R<5:0>						—	—	—	—	—	—	—	—	3F00
RPINR30	06BC	—	—	FLT3R<5:0>						—	—	FLT2R<5:0>						3F3F
RPINR31	06BE	—	—	FLT5R<5:0>						—	—	FLT4R<5:0>						3F3F
RPINR32	06C0	—	—	FLT7R<5:0>						—	—	FLT6R<5:0>						3F3F
RPINR33	06C2	—	—	SYNCI1R<5:0>						—	—	FLT8R<5:0>						3F3F
RPINR34	06C4	—	—	—	—	—	—	—	—	—	—	SYNCI2R<5:0>						003F

Legend: x = unknown value on Reset, — = unimplemented, read as '0'. Reset values are shown in hexadecimal.

TABLE 4-25: PERIPHERAL PIN SELECT INPUT REGISTER MAP FOR dsPIC33FJ06GS101A AND dsPIC33FJ06GS102A

SFR Name	SFR Addr	Bit 15	Bit 14	Bit 13	Bit 12	Bit 11	Bit 10	Bit 9	Bit 8	Bit 7	Bit 6	Bit 5	Bit 4	Bit 3	Bit 2	Bit 1	Bit 0	All Resets
RPINR0	0680	—	—	INT1R<5:0>						—	—	—	—	—	—	—	—	3F00
RPINR1	0682	—	—	—	—	—	—	—	—	—	—	INT2R<5:0>						003F
RPINR2	0684	—	—	T1CKR<5:0>						—	—	—	—	—	—	—	—	3F00
RPINR3	0686	—	—	—	—	—	—	—	—	—	—	T2CKR<5:0>						003F
RPINR11	0696	—	—	—	—	—	—	—	—	—	—	OCFAR<5:0>						003F
RPINR18	06A4	—	—	U1CTSR<5:0>							—	U1RXR<5:0>						3F3F
RPINR20	06A8	—	—	SCK1R<5:0>							—	SDI1R<5:0>						3F3F
RPINR21	06AA	—	—	—	—	—	—	—	—	—	—	SS1R<5:0>						003F
RPINR29	06BA	—	—	FLT1R<5:0>						—	—	—	—	—	—	—	—	3F00
RPINR30	06BC	—	—	FLT3R<5:0>						—	—	FLT2R<5:0>						3F3F
RPINR31	06BE	—	—	FLT5R<5:0>						—	—	FLT4R<5:0>						3F3F
RPINR32	06C0	—	—	FLT7R<5:0>						—	—	FLT6R<5:0>						3F3F
RPINR33	06C2	—	—	SYNCI1R<5:0>						—	—	FLT8R<5:0>						3F3F
RPINR34	06C4	—	—	—	—	—	—	—	—	—	—	SYNCI2R<5:0>						003F

Legend: x = unknown value on Reset, — = unimplemented, read as '0'. Reset values are shown in hexadecimal.

© 2011-2012 Microchip Technology Inc.

TABLE 4-26: PERIPHERAL PIN SELECT INPUT REGISTER MAP FOR dsPIC33FJ06GS202A AND dsPIC33FJ09GS302

SFR Name	SFR Addr	Bit 15	Bit 14	Bit 13	Bit 12	Bit 11	Bit 10	Bit 9	Bit 8	Bit 7	Bit 6	Bit 5	Bit 4	Bit 3	Bit 2	Bit 1	Bit 0	All Resets
RPINR0	0680	—	—	INT1R<5:0>						—	—	—	—	—	—	—	—	3F00
RPINR1	0682	—	—	—	—	—	—	—	—	—	—	INT2R<5:0>						003F
RPINR2	0684	—	—	T1CKR<5:0>						—	—	—	—	—	—	—	—	3F00
RPINR3	0686	—	—	—	—	—	—	—	—	—	—	T2CKR<5:0>						003F
RPINR7	068E	—	—	—	—	—	—	—	—	—	—	IC1R<5:0>						003F
RPINR11	0696	—	—	—	—	—	—	—	—	—	—	OCFAR<5:0>						003F
RPINR18	06A4	—	—	U1CTSR<5:0>						—	—	U1RXR<5:0>						3F3F
RPINR20	06A8	—	—	SCK1R<5:0>						—	—	SDI1R<5:0>						3F3F
RPINR21	06AA	—	—	—	—	—	—	—	—	—	—	SS1R<5:0>						003F
RPINR29	06BA	—	—	FLT1R<5:0>						—	—	—	—	—	—	—	—	3F00
RPINR30	06BC	—	—	FLT3R<5:0>						—	—	FLT2R<5:0>						3F3F
RPINR31	06BE	—	—	FLT5R<5:0>						—	—	FLT4R<5:0>						3F3F
RPINR32	06C0	—	—	FLT7R<5:0>						—	—	FLT6R<5:0>						3F3F
RPINR33	06C2	—	—	SYNCI1R<5:0>						—	—	FLT8R<5:0>						3F3F
RPINR34	06C4	—	—	—	—	—	—	—	—	—	—	SYNCI2R<5:0>						003F

Legend: x = unknown value on Reset, — = unimplemented, read as '0'. Reset values are shown in hexadecimal.

TABLE 4-27: PERIPHERAL PIN SELECT OUTPUT REGISTER MAP FOR dsPIC33FJ06GS001 AND dsPIC33FJ06GS101A

File Name	Addr	Bit 15	Bit 14	Bit 13	Bit 12	Bit 11	Bit 10	Bit 9	Bit 8	Bit 7	Bit 6	Bit 5	Bit 4	Bit 3	Bit 2	Bit 1	Bit 0	All Resets
RPOR0	06D0	—	—	RP1R<5:0>						—	—	RP0R<5:0>						0000
RPOR1	06D2	—	—	RP3R<5:0>						—	—	RP2R<5:0>						0000
RPOR2	06D4	—	—	RP5R<5:0>						—	—	RP4R<5:0>						0000
RPOR3	06D6	—	—	RP7R<5:0>						—	—	RP6R<5:0>						0000
RPOR16	06F0	—	—	RP33R<5:0>						—	—	RP32R<5:0>						0000
RPOR17	06F2	—	—	RP35R<5:0>						—	—	RP34R<5:0>						0000

Legend: x = unknown value on Reset, — = unimplemented, read as '0'. Reset values are shown in hexadecimal.

© 2011-2012 Microchip Technology Inc.

TABLE 4-28: PERIPHERAL PIN SELECT OUTPUT REGISTER MAP FOR dsPIC33FJ06GS102A, dsPIC33FJ06GS202A AND dsPIC33FJ09GS302

File Name	Addr	Bit 15	Bit 14	Bit 13	Bit 12	Bit 11	Bit 10	Bit 9	Bit 8	Bit 7	Bit 6	Bit 5	Bit 4	Bit 3	Bit 2	Bit 1	Bit 0	All Resets
RPOR0	06D0	—	—	RP1R<5:0>						—	—	RP0R<5:0>						0000
RPOR1	06D2	—	—	RP3R<5:0>						—	—	RP2R<5:0>						0000
RPOR2	06D4	—	—	RP5R<5:0>						—	—	RP4R<5:0>						0000
RPOR3	06D6	—	—	RP7R<5:0>						—	—	RP6R<5:0>						0000
RPOR4	06D8	—	—	RP9R<5:0>						—	—	RP8R<5:0>						0000
RPOR5	06DA	—	—	RP11R<5:0>						—	—	RP10R<5:0>						0000
RPOR6	06DC	—	—	RP13R<5:0>						—	—	RP12R<5:0>						0000
RPOR7	06DE	—	—	RP15R<5:0>						—	—	RP14R<5:0>						0000
RPOR16	06F0	—	—	RP33<5:0>						—	—	RP32<5:0>						0000
RPOR17	06F2	—	—	RP35<5:0>						—	—	RP34<5:0>						0000

Legend: x = unknown value on Reset, — = unimplemented, read as '0'. Reset values are shown in hexadecimal.

© 2011-2012 Microchip Technology Inc.

TABLE 4-29: PORTA REGISTER MAP

SFR Name	SFR Addr	Bit 15	Bit 14	Bit 13	Bit 12	Bit 11	Bit 10	Bit 9	Bit 8	Bit 7	Bit 6	Bit 5	Bit 4	Bit 3	Bit 2	Bit 1	Bit 0	All Resets
TRISA	02C0	—	—	—	—	—	—	—	—	—	—	—	TRISA4	TRISA3	TRISA2	TRISA1	TRISA0	001F
PORTA	02C2	—	—	—	—	—	—	—	—	—	—	—	RA4	RA3	RA2	RA1	RA0	xxxx
LATA	02C4	—	—	—	—	—	—	—	—	—	—	—	LATA4	LATA3	LATA2	LATA1	LATA0	0000
ODCA	02C6	—	—	—	—	—	—	—	—	—	—	—	ODCA4	ODCA3	—	—	—	0000

Legend: x = unknown value on Reset, — = unimplemented, read as '0'. Reset values are shown in hexadecimal.

TABLE 4-30: PORTB REGISTER MAP FOR dsPIC33FJ06GS001 AND dsPIC33FJ06GS101A

SFR Name	SFR Addr	Bit 15	Bit 14	Bit 13	Bit 12	Bit 11	Bit 10	Bit 9	Bit 8	Bit 7	Bit 6	Bit 5	Bit 4	Bit 3	Bit 2	Bit 1	Bit 0	All Resets
TRISB	02C8	—	—	—	—	—	—	—	—	TRISB7	TRISB6	TRISB5	TRISB4	TRISB3	TRISB2	TRISB1	TRISB0	00FF
PORTB	02CA	—	—	—	—	—	—	—	—	RB7	RB6	RB5	RB4	RB3	RB2	RB1	RB0	xxxx
LATB	02CC	—	—	—	—	—	—	—	—	LATB7	LATB6	LATB5	LATB4	LATB3	LATB2	LATB1	LATB0	0000
ODCB	02CE	—	—	—	—	—	—	—	—	ODCB7	ODCB6	—	—	—	—	—	—	0000

Legend: x = unknown value on Reset, — = unimplemented, read as '0'. Reset values are shown in hexadecimal.

TABLE 4-31: PORTB REGISTER MAP FOR dsPIC33FJ06GS102A, dsPIC33FJ06GS202A AND dsPIC33FJ09GS302

SFR Name	SFR Addr	Bit 15	Bit 14	Bit 13	Bit 12	Bit 11	Bit 10	Bit 9	Bit 8	Bit 7	Bit 6	Bit 5	Bit 4	Bit 3	Bit 2	Bit 1	Bit 0	All Resets
TRISB	02C8	TRISB15	TRISB14	TRISB13	TRISB12	TRISB11	TRISB10	TRISB9	TRISB8	TRISB7	TRISB6	TRISB5	TRISB4	TRISB3	TRISB2	TRISB1	TRISB0	FFFF
PORTB	02CA	RB15	RB14	RB13	RB12	RB11	RB10	RB9	RB8	RB7	RB6	RB5	RB4	RB3	RB2	RB1	RB0	xxxx
LATB	02CC	LATB15	LATB14	LATB13	LATB12	LATB11	LATB10	LATB9	LATB8	LATB7	LATB6	LATB5	LATB4	LATB3	LATB2	LATB1	LATB0	0000
ODCB	02CE	ODCB15	ODCB14	ODCB13	ODCB12	ODCB11	—	—	ODCB8	ODCB7	ODCB6	—	—	—	—	—	—	0000

Legend: x = unknown value on Reset, — = unimplemented, read as '0'. Reset values are shown in hexadecimal.

© 2011-2012 Microchip Technology Inc.

TABLE 4-32: SYSTEM CONTROL REGISTER MAP

SFR Name	SFR Addr	Bit 15	Bit 14	Bit 13	Bit 12	Bit 11	Bit 10	Bit 9	Bit 8	Bit 7	Bit 6	Bit 5	Bit 4	Bit 3	Bit 2	Bit 1	Bit 0	All Resets
RCON	0740	TRAPR	IOPUWR	—	—	—	—	CM	VREGS	EXTR	SWR	SWDTEN	WDTO	SLEEP	IDLE	BOR	POR	xxxx(1)
OSCCON	0742	—	COSC<2:0>			—	NOSC<2:0>			CLKLOCK	IOLOCK	LOCK	—	CF	—	—	OSWEN	0300(2)
CLKDIV	0744	ROI	DOZE<2:0>			DOZEN	FRCDIV<2:0>			PLLPOST<1:0>		—	PLLPRE<4:0>					3040
PLLFBD	0746	—	—	—	—	—	—	—	PLLDIV<8:0>									0030
OSCTUN	0748	—	—	—	—	—	—	—	—	—	—	TUN<5:0>						0000
LFSR	074C	—	LFSR<14:0>															0000
REFOCON	074E	ROON	—	ROSSLP	ROSEL	RODIV<3:0>				—	—	—	—	—	—	—	—	0000
ACLKCON	0750	ENAPLL	APLLCK	SELACLK	—	—	APSTSCLR<2:0>			ASRCSEL	FRCSEL	—	—	—	—	—	—	0000

Legend: x = unknown value on Reset, — = unimplemented, read as '0'. Reset values are shown in hexadecimal.

Note 1: The RCON register Reset values are dependent on the type of Reset.

2: The OSCCON register Reset values are dependent on the FOSCx Configuration bits and on type of Reset.

TABLE 4-33: NVM REGISTER MAP

File Name	Addr	Bit 15	Bit 14	Bit 13	Bit 12	Bit 11	Bit 10	Bit 9	Bit 8	Bit 7	Bit 6	Bit 5	Bit 4	Bit 3	Bit 2	Bit 1	Bit 0	All Resets
NVMCON	0760	WR	WREN	WRERR	—	—	—	—	—	—	ERASE	—	—	NVMOP<3:0>				0000(1)
NVMKEY	0766	—	—	—	—	—	—	—	—	NVMKEY<7:0>								0000

Legend: x = unknown value on Reset, — = unimplemented, read as '0'. Reset values are shown in hexadecimal.

Note 1: Reset value shown is for POR only. Value on other Reset states is dependent on the state of memory write or erase operations at the time of Reset.

© 2011-2012 Microchip Technology Inc.

TABLE 4-34: PMD REGISTER MAP FOR dsPIC33FJ06GS001

SFR Name	SFR Addr	Bit 15	Bit 14	Bit 13	Bit 12	Bit 11	Bit 10	Bit 9	Bit 8	Bit 7	Bit 6	Bit 5	Bit 4	Bit 3	Bit 2	Bit 1	Bit 0	All Resets
PMD1	0770	—	—	—	T2MD	T1MD	—	PWMMD	—	I2C1MD	—	—	—	—	—	—	ADCMD	0000
PMD3	0774	—	—	—	—	—	CMPMD	—	—	—	—	—	—	—	—	—	—	0000
PMD4	0776	—	—	—	—	—	—	—	—	—	—	—	—	REFOMD	—	—	—	0000
PMD6	077A	—	—	—	—	PWM4MD	—	—	PWM1MD	—	—	—	—	—	—	—	—	0000
PMD7	077C	—	—	—	—	—	—	CMPMD2	CMPMD1	—	—	—	—	—	—	—	—	0000

Legend: x = unknown value on Reset, — = unimplemented, read as '0'. Reset values are shown in hexadecimal.

TABLE 4-35: PMD REGISTER MAP FOR dsPIC33FJ06GS101A

SFR Name	SFR Addr	Bit 15	Bit 14	Bit 13	Bit 12	Bit 11	Bit 10	Bit 9	Bit 8	Bit 7	Bit 6	Bit 5	Bit 4	Bit 3	Bit 2	Bit 1	Bit 0	All Resets
PMD1	0770	—	—	—	T2MD	T1MD	—	PWMMD	—	I2C1MD	—	U1MD	—	SPI1MD	—	—	ADCMD	0000
PMD2	0772	—	—	—	—	—	—	—	—	—	—	—	—	—	—	—	OC1MD	0000
PMD4	0776	—	—	—	—	—	—	—	—	—	—	—	—	REFOMD	—	—	—	0000
PMD6	077A	—	—	—	—	PWM4MD	—	—	PWM1MD	—	—	—	—	—	—	—	—	0000

Legend: x = unknown value on Reset, — = unimplemented, read as '0'. Reset values are shown in hexadecimal.

TABLE 4-36: PMD REGISTER MAP FOR dsPIC33FJ06GS102A

SFR Name	SFR Addr	Bit 15	Bit 14	Bit 13	Bit 12	Bit 11	Bit 10	Bit 9	Bit 8	Bit 7	Bit 6	Bit 5	Bit 4	Bit 3	Bit 2	Bit 1	Bit 0	All Resets
PMD1	0770	—	—	—	T2MD	T1MD	—	PWMMD	—	I2C1MD	—	U1MD	—	SPI1MD	—	—	ADCMD	0000
PMD2	0772	—	—	—	—	—	—	—	—	—	—	—	—	—	—	—	OC1MD	0000
PMD4	0776	—	—	—	—	—	—	—	—	—	—	—	—	REFOMD	—	—	—	0000
PMD6	077A	—	—	—	—	—	—	PWM2MD	PWM1MD	—	—	—	—	—	—	—	—	0000

Legend: x = unknown value on Reset, — = unimplemented, read as '0'. Reset values are shown in hexadecimal.

© 2011-2012 Microchip Technology Inc.

TABLE 4-37: PMD REGISTER MAP FOR dsPIC33FJ06GS202A

SFR Name	SFR Addr	Bit 15	Bit 14	Bit 13	Bit 12	Bit 11	Bit 10	Bit 9	Bit 8	Bit 7	Bit 6	Bit 5	Bit 4	Bit 3	Bit 2	Bit 1	Bit 0	All Resets
PMD1	0770	—	—	—	T2MD	T1MD	—	PWMMD	—	I2C1MD	—	U1MD	—	SPI1MD	—	—	ADCMD	0000
PMD2	0772	—	—	—	—	—	—	—	IC1MD	—	—	—	—	—	—	—	OC1MD	0000
PMD3	0774	—	—	—	—	—	CMPMD	—	—	—	—	—	—	—	—	—	—	0000
PMD4	0776	—	—	—	—	—	—	—	—	—	—	—	—	REFOMD	—	—	—	0000
PMD6	077A	—	—	—	—	—	—	PWM2MD	PWM1MD	—	—	—	—	—	—	—	—	0000
PMD7	077C	—	—	—	—	—	—	CMP2MD	CMP1MD	—	—	—	—	—	—	—	—	0000

Legend: x = unknown value on Reset, — = unimplemented, read as '0'. Reset values are shown in hexadecimal.

TABLE 4-38: PMD REGISTER MAP FOR dsPIC33FJ09GS302

SFR Name	SFR Addr	Bit 15	Bit 14	Bit 13	Bit 12	Bit 11	Bit 10	Bit 9	Bit 8	Bit 7	Bit 6	Bit 5	Bit 4	Bit 3	Bit 2	Bit 1	Bit 0	All Resets
PMD1	0770	—	—	—	T2MD	T1MD	—	PWMMD	—	I2C1MD	—	U1MD	—	SPI1MD	—	—	ADCMD	0000
PMD2	0772	—	—	—	—	—	—	—	IC1MD	—	—	—	—	—	—	—	OC1MD	0000
PMD3	0774	—	—	—	—	—	CMPMD	—	—	—	—	—	—	—	—	—	—	0000
PMD4	0776	—	—	—	—	—	—	—	—	—	—	—	—	REFOMD	—	—	—	0000
PMD6	077A	—	—	—	—	PWM4MD	—	PWM2MD	PWM1MD	—	—	—	—	—	—	—	—	0000
PMD7	077C	—	—	—	—	—	—	CMP2MD	CMP1MD	—	—	—	—	—	—	—	—	0000
PMD8	077E	—	—	—	—	—	—	—	—	—	—	—	—	—	—	CCSMD	—	0000

Legend: x = unknown value on Reset, — = unimplemented, read as '0'. Reset values are shown in hexadecimal.

© 2011-2012 Microchip Technology Inc.

4.3.1 SOFTWARE STACK

In addition to its use as a working register, the W15 register in the devices is also used as a software Stack Pointer. The Stack Pointer always points to the first available free word and grows from lower to higher addresses. It predecrements for stack pops and post-increments for stack pushes, as shown in Figure 4-5. For a PC push during any `CALL` instruction, the MSb of the PC is zero-extended before the push, ensuring that the MSb is always clear.

> **Note:** A PC push during exception processing concatenates the SRL register to the MSb of the PC prior to the push.

The Stack Pointer Limit register (SPLIM) associated with the Stack Pointer sets an upper address boundary for the stack. SPLIM is uninitialized at Reset. As is the case for the Stack Pointer, SPLIM<0> is forced to '`0`' because all stack operations must be word-aligned.

Whenever an EA is generated using W15 as a source or destination pointer, the resulting address is compared with the value in SPLIM. If the contents of the Stack Pointer (W15) and the SPLIM register are equal and a push operation is performed, a stack error trap will not occur. The stack error trap will occur on a subsequent push operation. For example, to cause a stack error trap when the stack grows beyond address 0x1000 in RAM, initialize the SPLIM with the value 0x0FFE.

Similarly, a Stack Pointer underflow (stack error) trap is generated when the Stack Pointer address is found to be less than 0x0800. This prevents the stack from interfering with the Special Function Register (SFR) space.

A write to the SPLIM register should not be immediately followed by an indirect read operation using W15.

FIGURE 4-5: `CALL` STACK FRAME

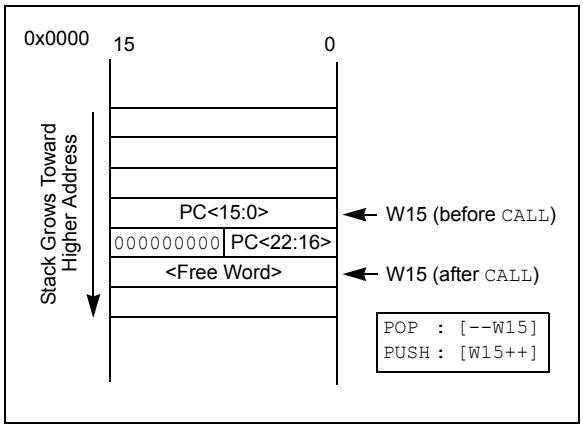

4.4 Instruction Addressing Modes

The addressing modes shown in Table 4-39 form the basis of the addressing modes optimized to support the specific features of individual instructions. The addressing modes provided in the `MAC` class of instructions differ from those in the other instruction types.

4.4.1 FILE REGISTER INSTRUCTIONS

Most file register instructions use a 13-bit address field (f) to directly address data present in the first 8192 bytes of data memory (Near Data Space). Most file register instructions employ a working register, W0, which is denoted as WREG in these instructions. The destination is typically either the same file register or WREG (with the exception of the `MUL` instruction), which writes the result to a register or register pair. The `MOV` instruction allows additional flexibility and can access the entire data space.

4.4.2 MCU INSTRUCTIONS

The three-operand MCU instructions are of the form:

```
Operand 3 = Operand 1 <function> Operand 2
```

where Operand 1 is always a working register (that is, the addressing mode can only be register direct), which is referred to as Wb. Operand 2 can be a W register, fetched from data memory, or a 5-bit literal. The result location can be either a W register or a data memory location. The following addressing modes are supported by MCU instructions:

- Register Direct
- Register Indirect
- Register Indirect Post-Modified
- Register Indirect Pre-Modified
- 5-Bit or 10-Bit Literal

> **Note:** Not all instructions support all of the addressing modes shown above. Individual instructions can support different subsets of these addressing modes.

© 2011-2012 Microchip Technology Inc.

TABLE 4-39: FUNDAMENTAL ADDRESSING MODES SUPPORTED

Addressing Mode	Description
File Register Direct	The address of the File register is specified explicitly.
Register Direct	The contents of a register are accessed directly.
Register Indirect	The contents of Wn forms the Effective Address (EA).
Register Indirect Post-Modified	The contents of Wn forms the EA. Wn is post-modified (incremented or decremented) by a constant value.
Register Indirect Pre-Modified	Wn is pre-modified (incremented or decremented) by a signed constant value to form the EA.
Register Indirect with Register Offset (Register Indexed)	The sum of Wn and Wb forms the EA.
Register Indirect with Literal Offset	The sum of Wn and a literal forms the EA.

4.4.3 MOVE AND ACCUMULATOR INSTRUCTIONS

Move instructions and the DSP accumulator class of instructions provide a greater degree of addressing flexibility than other instructions. In addition to the addressing modes supported by most MCU instructions, move and accumulator instructions also support Register Indirect with Register Offset Addressing mode, also referred to as Register Indexed mode.

> **Note:** For the `MOV` instructions, the addressing mode specified in the instruction can differ for the source and destination EA. However, the 4-bit Wb (register offset) field is shared by both source and destination (but typically only used by one).

In summary, the following addressing modes are supported by move and accumulator instructions:

- Register Direct
- Register Indirect
- Register Indirect Post-modified
- Register Indirect Pre-modified
- Register Indirect with Register Offset (Indexed)
- Register Indirect with Literal Offset
- 8-Bit Literal
- 16-Bit Literal

> **Note:** Not all instructions support all the addressing modes given above. Individual instructions may support different subsets of these addressing modes.

4.4.4 `MAC` INSTRUCTIONS

The dual source operand DSP instructions (`CLR`, `ED`, `EDAC`, `MAC`, `MPY`, `MPY.N`, `MOVSAC` and `MSC`), also referred to as `MAC` instructions, use a simplified set of addressing modes to allow the user application to effectively manipulate the data pointers through register indirect tables.

The two-source operand prefetch registers must be members of the set {W8, W9, W10, W11}. For data reads, W8 and W9 are always directed to the X RAGU, and W10 and W11 are always directed to the Y AGU. The Effective Addresses generated (before and after modification) must, therefore, be valid addresses within X data space for W8 and W9 and Y data space for W10 and W11.

> **Note:** Register Indirect with Register Offset Addressing mode is available only for W9 (in X space) and W11 (in Y space).

In summary, the following addressing modes are supported by the `MAC` class of instructions:

- Register Indirect
- Register Indirect Post-modified by 2
- Register Indirect Post-modified by 4
- Register Indirect Post-modified by 6
- Register Indirect with Register Offset (Indexed)

4.4.5 OTHER INSTRUCTIONS

Besides the addressing modes outlined previously, some instructions use literal constants of various sizes. For example, `BRA` (branch) instructions use 16-bit signed literals to specify the branch destination directly, whereas the `DISI` instruction uses a 14-bit unsigned literal field. In some instructions, such as `ADD Acc`, the source of an operand or result is implied by the opcode itself. Certain operations, such as `NOP`, do not have any operands.

4.5 Modulo Addressing

Modulo Addressing mode is a method used to provide an automated means to support circular data buffers using hardware. The objective is to remove the need for software to perform data address boundary checks when executing tightly looped code, as is typical in many DSP algorithms.

Modulo Addressing can operate in either data or program space (since the data pointer mechanism is essentially the same for both). One circular buffer can be supported in each of the X (which also provides the pointers into program space) and Y data spaces. Modulo Addressing can operate on any W register pointer. However, it is not advisable to use W14 or W15 for Modulo Addressing since these two registers are used as the Stack Frame Pointer and Stack Pointer, respectively.

In general, any particular circular buffer can be configured to operate in only one direction as there are certain restrictions on the buffer start address (for incrementing buffers), or end address (for decrementing buffers), based upon the direction of the buffer.

The only exception to the usage restrictions is for buffers that have a power-of-two length. As these buffers satisfy the start and end address criteria, they can operate in a bidirectional mode (that is, address boundary checks are performed on both the lower and upper address boundaries).

4.5.1 START AND END ADDRESS

The Modulo Addressing scheme requires that a starting and ending address be specified and loaded into the 16-bit Modulo Buffer Address registers: XMODSRT, XMODEND, YMODSRT and YMODEND (see Table 4-1).

Note:	Y space Modulo Addressing EA calculations assume word-sized data (LSb of every EA is always clear).

The length of a circular buffer is not directly specified. It is determined by the difference between the corresponding start and end addresses. The maximum possible length of the circular buffer is 32K words (64 Kbytes).

4.5.2 W ADDRESS REGISTER SELECTION

The Modulo and Bit-Reversed Addressing Control register, MODCON<15:0>, contains enable flags as well as a W register field to specify the W Address registers. The XWM and YWM fields select the registers that will operate with Modulo Addressing:

- If XWM = 15, X RAGU and X WAGU Modulo Addressing is disabled
- If YWM = 15, Y AGU Modulo Addressing is disabled

The X Address Space Pointer W register (XWM), to which Modulo Addressing is to be applied, is stored in MODCON<3:0> (see Table 4-1). Modulo Addressing is enabled for X data space when XWM is set to any value other than ‘15’ and the XMODEN bit is set at MODCON<15>.

The Y Address Space Pointer W register (YWM) to which Modulo Addressing is to be applied is stored in MODCON<7:4>. Modulo Addressing is enabled for Y data space when YWM is set to any value other than ‘15’ and the YMODEN bit is set at MODCON<14>.

FIGURE 4-6: MODULO ADDRESSING OPERATION EXAMPLE

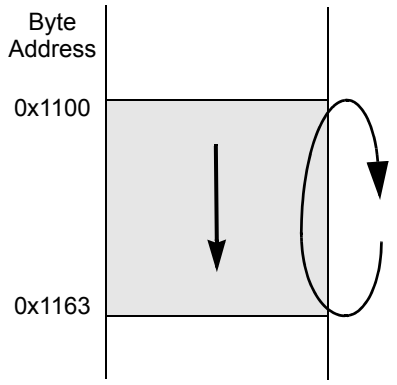


```
MOV     #0x1100, W0
MOV     W0, XMODSRT     ;set modulo start address
MOV     #0x1163, W0
MOV     W0, MODEND      ;set modulo end address
MOV     #0x8001, W0
MOV     W0, MODCON      ;enable W1, X AGU for modulo

MOV     #0x0000, W0     ;W0 holds buffer fill value

MOV     #0x1110, W1     ;point W1 to buffer

DO      AGAIN, #0x31    ;fill the 50 buffer locations
MOV     W0, [W1++]      ;fill the next location
AGAIN:  INC W0, W0      ;increment the fill value
```

Start Addr = 0x1100
End Addr = 0x1163
Length = 32 words

© 2011-2012 Microchip Technology Inc.

4.5.3 MODULO ADDRESSING APPLICABILITY

Modulo Addressing can be applied to the Effective Address (EA) calculation associated with any W register. Address boundaries check for addresses equal to:

- Upper boundary addresses for incrementing buffers
- Lower boundary addresses for decrementing buffers

It is important to realize that the address boundaries check for addresses less than or greater than the upper (for incrementing buffers) and lower (for decrementing buffers) boundary addresses (not just equal to). Address changes can, therefore, jump beyond boundaries and still be adjusted correctly.

Note:	The modulo corrected Effective Address is written back to the register only when Pre-Modify or Post-Modify Addressing mode is used to compute the Effective Address. When an address offset (such as [W7 + W2]) is used, Modulo Addressing correction is performed but the contents of the register remain unchanged.

4.6 Bit-Reversed Addressing

Bit-Reversed Addressing mode is intended to simplify data re-ordering for radix-2 FFT algorithms. It is supported by the X AGU for data writes only.

The modifier, which can be a constant value or register contents, is regarded as having its bit order reversed. The address source and destination are kept in normal order. Thus, the only operand requiring reversal is the modifier.

4.6.1 BIT-REVERSED ADDRESSING IMPLEMENTATION

Bit-Reversed Addressing mode is enabled when all of these conditions are met:

- BWMx bits (W register selection) in the MODCON register are any value other than ‘15’ (the stack cannot be accessed using Bit-Reversed Addressing)
- BREN bit is set in the XBREV register
- Addressing mode used is Register Indirect with Pre-increment or Post-increment

If the length of a bit-reversed buffer is $M = 2^N$ bytes, the last ‘N’ bits of the data buffer start address must be zeros.

XB<14:0> is the Bit-Reversed Address modifier, or ‘pivot point,’ which is typically a constant. In the case of an FFT computation, its value is equal to half of the FFT data buffer size.

Note:	All bit-reversed EA calculations assume word-sized data (LSb of every EA is always clear). The XB value is scaled accordingly to generate compatible (byte) addresses.

When enabled, Bit-Reversed Addressing is executed only for Register Indirect with Pre-Increment or Post-Increment Addressing and word-sized data writes. It will not function for any other addressing mode or for byte-sized data, and normal addresses are generated instead. When Bit-Reversed Addressing is active, the W Address Pointer is always added to the address modifier (XB), and the offset associated with the Register Indirect Addressing mode is ignored. In addition, as word-sized data is a requirement, the LSb of the EA is ignored (and always clear).

Note:	Modulo Addressing and Bit-Reversed Addressing should not be enabled together. If an application attempts to do so, Bit-Reversed Addressing will assume priority when active for the X WAGU and X WAGU; Modulo Addressing will be disabled. However, Modulo Addressing will continue to function in the X RAGU.

If Bit-Reversed Addressing has already been enabled by setting the BREN (XBREV<15>) bit, a write to the XBREV register should not be immediately followed by an indirect read operation using the W register that has been designated as the Bit-Reversed Pointer.

FIGURE 4-7: BIT-REVERSED ADDRESS EXAMPLE

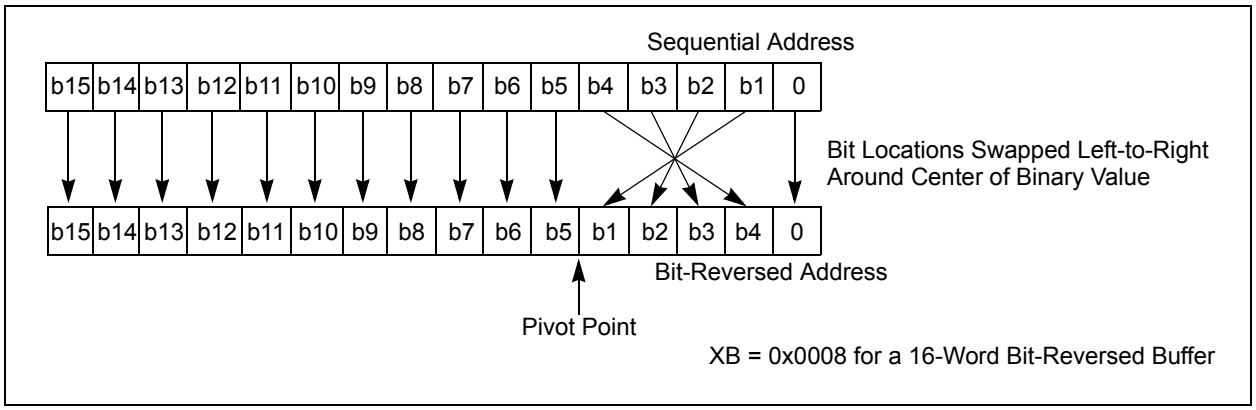

TABLE 4-40: BIT-REVERSED ADDRESS SEQUENCE (16-ENTRY)

Normal Address					Bit-Reversed Address				
A3	A2	A1	A0	Decimal	A3	A2	A1	A0	Decimal
0	0	0	0	0	0	0	0	0	0
0	0	0	1	1	1	0	0	0	8
0	0	1	0	2	0	1	0	0	4
0	0	1	1	3	1	1	0	0	12
0	1	0	0	4	0	0	1	0	2
0	1	0	1	5	1	0	1	0	10
0	1	1	0	6	0	1	1	0	6
0	1	1	1	7	1	1	1	0	14
1	0	0	0	8	0	0	0	1	1
1	0	0	1	9	1	0	0	1	9
1	0	1	0	10	0	1	0	1	5
1	0	1	1	11	1	1	0	1	13
1	1	0	0	12	0	0	1	1	3
1	1	0	1	13	1	0	1	1	11
1	1	1	0	14	0	1	1	1	7
1	1	1	1	15	1	1	1	1	15

© 2011-2012 Microchip Technology Inc.

4.7 Interfacing Program and Data Memory Spaces

The device architecture uses a 24-bit wide program space and a 16-bit wide data space. The architecture is also a modified Harvard scheme, meaning that data can also be present in the program space. To use this data successfully, it must be accessed in a way that preserves the alignment of information in both spaces.

Aside from normal execution, the device architecture provides two methods by which program space can be accessed during operation:

- Using table instructions to access individual bytes or words anywhere in the program space
- Remapping a portion of the program space into the data space (Program Space Visibility)

Table instructions allow an application to read or write to small areas of the program memory. This capability makes the method ideal for accessing data tables that need to be updated periodically. It also allows access to all bytes of the program word. The remapping method allows an application to access a large block of data on a read-only basis, which is ideal for look ups from a large table of static data. The application can only access the least significant word of the program word.

4.7.1 ADDRESSING PROGRAM SPACE

Since the address ranges for the data and program spaces are 16 and 24 bits, respectively, a method is needed to create a 23-bit or 24-bit program address from 16-bit data registers. The solution depends on the interface method to be used.

For table operations, the 8-bit Table Page register (TBLPAG) is used to define a 32K word region within the program space. This is concatenated with a 16-bit EA to arrive at a full 24-bit program space address. In this format, the Most Significant bit of TBLPAG is used to determine if the operation occurs in the user memory (TBLPAG<7> = 0) or the configuration memory (TBLPAG<7> = 1).

For remapping operations, the 8-bit Program Space Visibility Register (PSVPAG) is used to define a 16K word page in the program space. When the Most Significant bit of the EA is '1', PSVPAG is concatenated with the lower 15 bits of the EA to form a 23-bit program space address. Unlike table operations, this limits remapping operations strictly to the user memory area.

Table 4-41 and Figure 4-8 show how the program EA is created for table operations and remapping accesses from the data EA. Here, P<23:0> refers to a program space word, and D<15:0> refers to a data space word.

TABLE 4-41: PROGRAM SPACE ADDRESS CONSTRUCTION

Access Type	Access Space	Program Space Address				
		<23>	<22:16>	<15>	<14:1>	<0>
Instruction Access (Code Execution)	User	0	PC<22:1>			0
		0xx xxxx xxxx xxxx xxxx xxx0				
TBLRD/TBLWT (Byte/Word Read/Write)	User	TBLPAG<7:0>		Data EA<15:0>		
		0xxx xxxx		xxxx xxxx xxxx xxxx		
	Configuration	TBLPAG<7:0>		Data EA<15:0>		
		1xxx xxxx		xxxx xxxx xxxx xxxx		
Program Space Visibility (Block Remap/Read)	User	0	PSVPAG<7:0>		Data EA<14:0>(1)	
		0	xxxx xxxx		xxx xxxx xxxx xxxx	

Note 1: Data EA<15> is always '1' in this case, but is not used in calculating the program space address. Bit 15 of the address is PSVPAG<0>.

FIGURE 4-8: DATA ACCESS FROM PROGRAM SPACE ADDRESS GENERATION

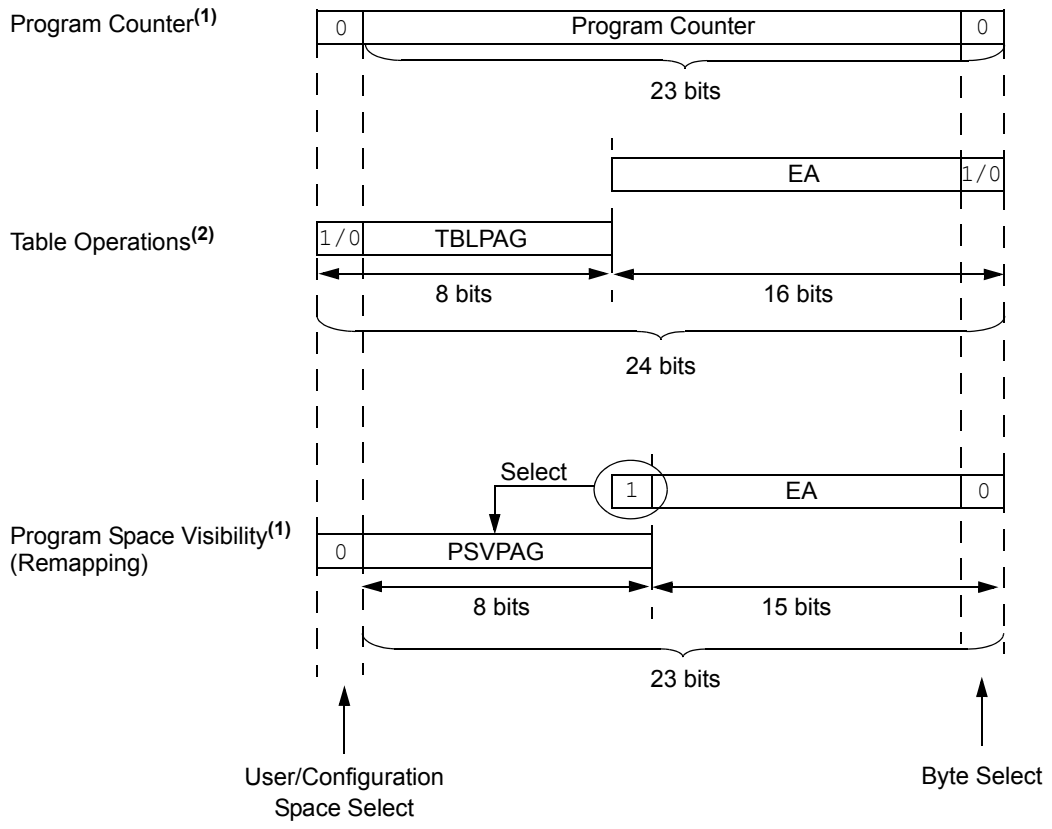

Note 1: The Least Significant bit (LSb) of program space addresses is always fixed as '0' to maintain word alignment of data in the program and data spaces.

2: Table operations are not required to be word-aligned. Table read operations are permitted in the configuration memory space.

© 2011-2012 Microchip Technology Inc.

4.7.2 DATA ACCESS FROM PROGRAM MEMORY USING TABLE INSTRUCTIONS

The TBLRDL and TBLWTL instructions offer a direct method of reading or writing the lower word of any address within the program space without going through data space. The TBLRDH and TBLWTH instructions are the only method to read or write the upper 8 bits of a program space word as data.

The PC is incremented by two for each successive 24-bit program word. This allows program memory addresses to directly map to data space addresses. Program memory can thus be regarded as two 16-bit wide word address spaces, residing side by side, each with the same address range. TBLRDL and TBLWTL access the space that contains the least significant data word. TBLRDH and TBLWTH access the space that contains the upper data byte.

Two table instructions are provided to move byte or word-sized (16-bit) data to and from program space. Both function as either byte or word operations.

- TBLRDL (Table Read Low):
  - In Word mode, this instruction maps the lower word of the program space location (P<15:0>) to a data address (D<15:0>)
  - In Byte mode, either the upper or lower byte of the lower program word is mapped to the lower byte of a data address. The upper byte is selected when byte select is '1'; the lower byte is selected when it is '0'.
- TBLRDH (Table Read High):
  - In Word mode, this instruction maps the entire upper word of a program address (P<23:16>) to a data address. Note that D<15:8>, the 'phantom byte', will always be '0'.
  - In Byte mode, this instruction maps the upper or lower byte of the program word to D<7:0> of the data address, in the TBLRDL instruction. The data is always '0' when the upper 'phantom' byte is selected (Byte Select = 1).

Similarly, two table instructions, TBLWTH and TBLWTL, are used to write individual bytes or words to a program space address. The details of their operation are explained in **Section 5.0 "Flash Program Memory"**.

For all table operations, the area of program memory space to be accessed is determined by the Table Page register (TBLPAG). TBLPAG covers the entire program memory space of the device, including user and configuration spaces. When TBLPAG<7> = 0, the table page is located in the user memory space. When TBLPAG<7> = 1, the page is located in configuration space.

FIGURE 4-9: ACCESSING PROGRAM MEMORY WITH TABLE INSTRUCTIONS

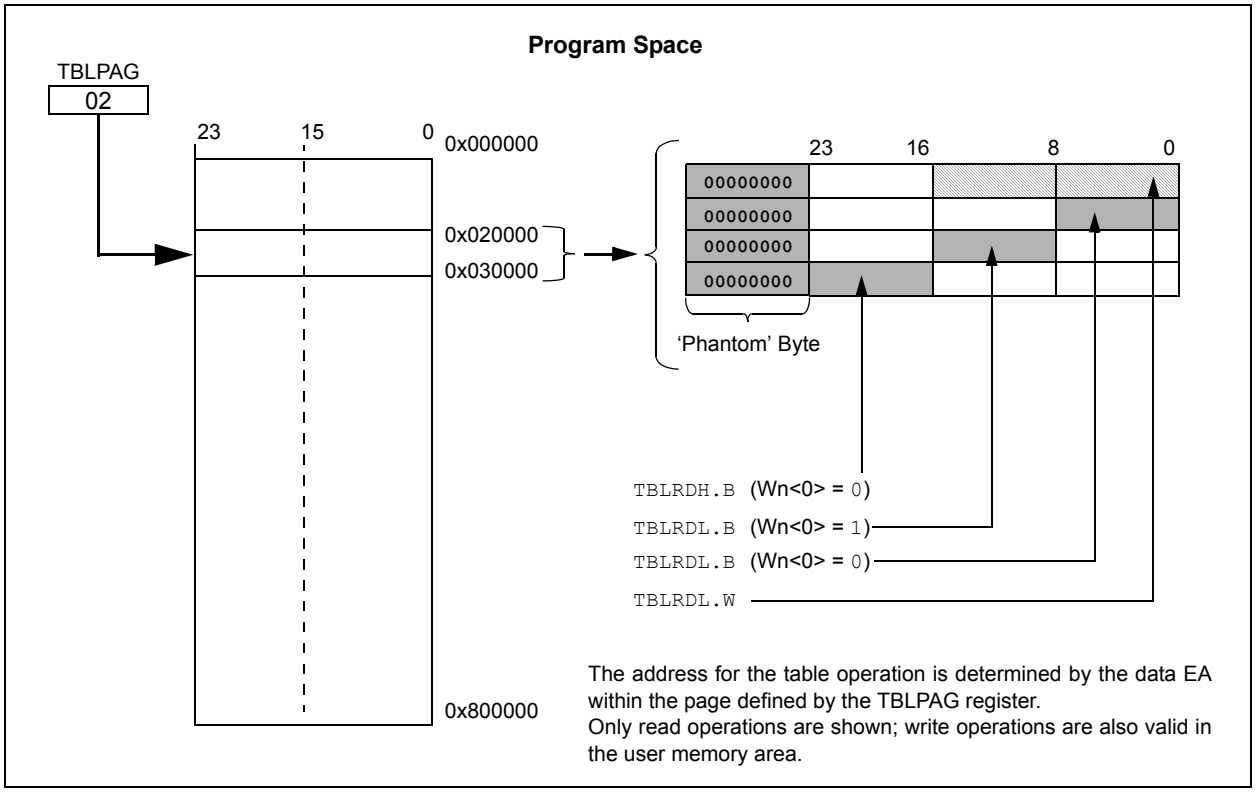

4.7.3 READING DATA FROM PROGRAM MEMORY USING PROGRAM SPACE VISIBILITY

The upper 32 Kbytes of data space may optionally be mapped into any 16K word page of the program space. This option provides transparent access to stored constant data from the data space without the need to use special instructions (such as `TBLRDL` or `TBLRDH`).

Program space access through the data space occurs if the Most Significant bit of the data space EA is '`1`' and program space visibility is enabled by setting the PSV bit in the Core Control register (CORCON<2>). The location of the program memory space to be mapped into the data space is determined by the Program Space Visibility Page register (PSVPAG). This 8-bit register defines any one of 256 possible pages of 16K words in program space. In effect, PSVPAG functions as the upper 8 bits of the program memory address, with the 15 bits of the EA functioning as the lower bits. By incrementing the PC by 2 for each program memory word, the lower 15 bits of data space addresses directly map to the lower 15 bits in the corresponding program space addresses.

Data reads to this area add a cycle to the instruction being executed, since two program memory fetches are required.

Although each data space address 0x8000 and higher maps directly into a corresponding program memory address (see Figure 4-10), only the lower 16 bits of the 24-bit program word are used to contain the data. The upper 8 bits of any program space location used as data should be programmed with '`1111 1111`' or '`0000 0000`' to force a `NOP`. This prevents possible issues should the area of code ever be accidentally executed.

> **Note:** PSV access is temporarily disabled during table reads/writes.

For operations that use PSV and are executed outside a `REPEAT` loop, the `MOV` and `MOV.D` instructions require one instruction cycle in addition to the specified execution time. All other instructions require two instruction cycles in addition to the specified execution time.

For operations that use PSV, and are executed inside a `REPEAT` loop, these instances require two instruction cycles in addition to the specified execution time of the instruction:

- Execution in the first iteration
- Execution in the last iteration
- Execution prior to exiting the loop due to an interrupt
- Execution upon re-entering the loop after an interrupt is serviced

Any other iteration of the `REPEAT` loop will allow the instruction using PSV to access data, to execute in a single cycle.

FIGURE 4-10: PROGRAM SPACE VISIBILITY OPERATION

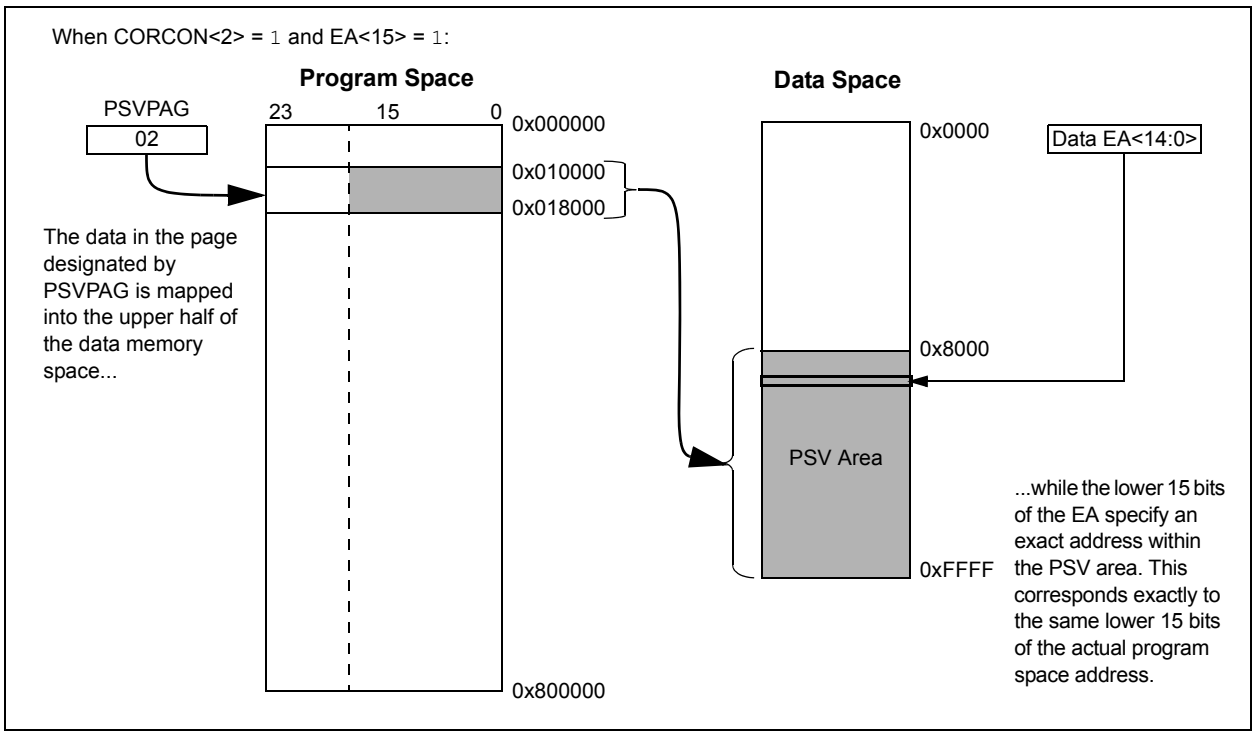

© 2011-2012 Microchip Technology Inc.

5.0 FLASH PROGRAM MEMORY

Note 1: This data sheet summarizes the features of the dsPIC33FJ06GS001/101A/102A/202A and dsPIC33FJ09GS302 families of devices. It is not intended to be a comprehensive reference source. To complement the information in this data sheet, refer to **Section 5. "Flash Programming"** (DS70191) in the "*dsPIC33F/PIC24H Family Reference Manual*", which is available from the Microchip web site (www.microchip.com).

2: Some registers and associated bits described in this section may not be available on all devices. Refer to **Section 4.0 "Memory Organization"** in this data sheet for device-specific register and bit information.

These devices contain internal Flash program memory for storing and executing application code. The memory is readable, writable and erasable during normal operation over the entire VDD range.

Flash memory can be programmed in two ways:

- In-Circuit Serial Programming™ (ICSP™) programming capability
- Run-Time Self-Programming (RTSP)

ICSP allows a dsPIC33FJ06GS001/101A/102A/202A and dsPIC33FJ09GS302 device to be serially programmed while in the end application circuit. This is done with two lines for programming clock and programming data (one of the alternate programming pin pairs: PGECx/PGEDx), and three other lines for power (VDD), ground (VSS) and Master Clear ($\overline{MCLR}$). This allows customers to manufacture boards with unprogrammed devices and then program the digital signal controller just before shipping the product. This also allows the most recent firmware or a custom firmware to be programmed.

RTSP is accomplished using `TBLRD` (table read) and `TBLWT` (table write) instructions. With RTSP, the user application can write a single program memory word at a time, and erase program memory in blocks or 'pages' of 512 instructions (1536 bytes) at a time.

5.1 Table Instructions and Flash Programming

Regardless of the method used, all programming of Flash memory is done with the table read and table write instructions. These allow direct read and write access to the program memory space from the data memory while the device is in normal operating mode. The 24-bit target address in the program memory is formed using bits<7:0> of the TBLPAG register and the Effective Address (EA) from a W register specified in the table instruction, as shown in Figure 5-1.

The `TBLRDL` and the `TBLWTL` instructions are used to read or write to bits<15:0> of program memory. `TBLRDL` and `TBLWTL` can access program memory in both Word and Byte modes.

The `TBLRDH` and `TBLWTH` instructions are used to read or write to bits<23:16> of program memory. `TBLRDH` and `TBLWTH` can also access program memory in Word or Byte mode.

FIGURE 5-1: ADDRESSING FOR TABLE REGISTERS

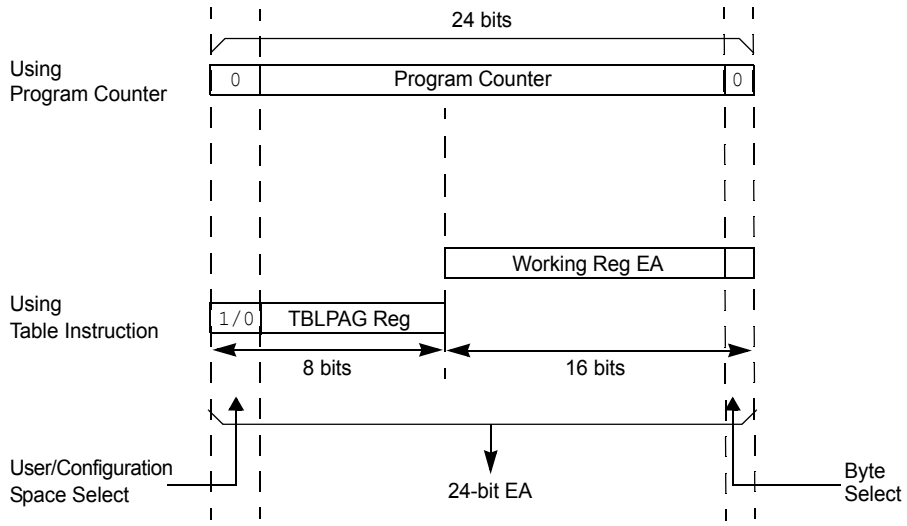

5.2 RTSP Operation

The dsPIC33FJ06GS001/101A/102A/202A and dsPIC33FJ09GS302 Flash program memory array is organized into rows of 64 instructions or 192 bytes. RTSP allows the user application to erase a page of memory, which consists of eight rows (512 instructions) at a time, and to program one row or one word at a time. Table 25-12 shows typical erase and programming times. The 8-row erase pages and single row write rows are edge-aligned from the beginning of program memory, on boundaries of 1536 bytes and 192 bytes, respectively.

The program memory implements holding buffers that can contain 64 instructions of programming data. Prior to the actual programming operation, the write data must be loaded into the buffers sequentially. The instruction words loaded must always be from a group of 64 boundary.

The basic sequence for RTSP programming is to set up a Table Pointer, then do a series of `TBLWT` instructions to load the buffers. Programming is performed by setting the control bits in the NVMCON register. A total of 64 `TBLWTL` and `TBLWTH` instructions are required to load the instructions.

All of the table write operations are single-word writes (two instruction cycles) because only the buffers are written. A programming cycle is required for programming each row.

5.3 Programming Operations

A complete programming sequence is necessary for programming or erasing the internal Flash in RTSP mode. The processor stalls (waits) until the programming operation is finished.

The programming time depends on the FRC accuracy (see Table 25-19) and the value of the FRC Oscillator Tuning register (see Register 8-4). Use the following formula to calculate the minimum and maximum values for the Row Write Time, Page Erase Time and Word Write Cycle Time parameters (see Table 25-12).

EQUATION 5-1: PROGRAMMING TIME

$$\frac{T}{7.37\ MHz \times (FRC\ Accuracy)\% \times (FRC\ Tuning)\%}$$

For example, if the device is operating at +125°C, the FRC accuracy will be ±5%. If the TUN<5:0> bits (see Register 8-4) are set to `'b111111`, the minimum row write time is equal to Equation 5-2.

EQUATION 5-2: MINIMUM PAGE ERASE TIME

$$T_{RW} = \frac{168517\ Cycles}{7.37\ MHz \times (1 + 0.05) \times (1 - 0.00375)} = 21.85ms$$

The maximum row write time is equal to Equation 5-3.

EQUATION 5-3: MAXIMUM PAGE ERASE TIME

$$T_{RW} = \frac{168517\ Cycles}{7.37\ MHz \times (1 - 0.05) \times (1 - 0.00375)} = 24.16ms$$

Setting the WR bit (NVMCON<15>) starts the operation, and the WR bit is automatically cleared when the operation is finished.

5.4 Control Registers

Two SFRs are used to read and write the program Flash memory: NVMCON and NVMKEY.

The NVMCON register (Register 5-1) controls which blocks are to be erased, which memory type is to be programmed and the start of the programming cycle.

NVMKEY is a write-only register that is used for write protection. To start a programming or erase sequence, the user application must consecutively write 0x55 and 0xAA to the NVMKEY register. Refer to **Section 5.3 "Programming Operations"** for further details.

© 2011-2012 Microchip Technology Inc.

5.5 Flash Memory Control Registers

REGISTER 5-1: NVMCON: FLASH MEMORY CONTROL REGISTER

R/SO-0	R/W-0	R/W-0	U-0	U-0	U-0	U-0	U-0
WR(1)	WREN(1)	WRERR(1)	—	—	—	—	—
bit 15							bit 8

U-0	R/W-0	U-0	U-0	R/W-0	R/W-0	R/W-0	R/W-0
—	ERASE(1)	—	—	NVMOP<3:0>(1,2)			
bit 7							bit 0

Legend:	SO = Settable Only bit		
R = Readable bit	W = Writable bit	U = Unimplemented bit, read as ‘0’	
-n = Value at POR	‘1’ = Bit is set	‘0’ = Bit is cleared	x = Bit is unknown

bit 15 **WR:** Write Control bit(1)
- 1 = Initiates a Flash memory program or erase operation. The operation is self-timed and the bit is cleared by hardware once operation is complete. This bit can only be set (not cleared) in software.
- 0 = Program or erase operation is complete and inactive

bit 14 **WREN:** Write Enable bit(1)
- 1 = Enables Flash program/erase operations
- 0 = Inhibits Flash program/erase operations

bit 13 **WRERR:** Write Sequence Error Flag bit(1)
- 1 = An improper program or erase sequence attempt or termination has occurred (bit is set automatically on any set attempt of the WR bit)
- 0 = The program or erase operation completed normally

bit 12-7 **Unimplemented:** Read as ‘0’

bit 6 **ERASE:** Erase/Program Enable bit(1)
- 1 = Performs the erase operation specified by NVMOP<3:0> on the next WR command
- 0 = Performs the program operation specified by NVMOP<3:0> on the next WR command

bit 5-4 **Unimplemented:** Read as ‘0’

bit 3-0 **NVMOP<3:0>:** NVM Operation Select bits(1,2)

If ERASE = 1:
- 1111 = No operation
- 1101 = Erase general segment
- 0011 = No operation
- 0010 = Memory page erase operation
- 0001 = Reserved
- 0000 = Reserved

If ERASE = 0:
- 1111 = No operation
- 1101 = No operation
- 0011 = Memory word program operation
- 0010 = No operation
- 0001 = Reserved
- 0000 = Reserved

Note 1: These bits can only be reset on a Power-on Reset (POR).
2: All other combinations of NVMOP<3:0> are unimplemented.

REGISTER 5-2: NVMKEY: NONVOLATILE MEMORY KEY REGISTER

U-0	U-0	U-0	U-0	U-0	U-0	U-0	U-0
—	—	—	—	—	—	—	—
bit 15							bit 8

W-0	W-0	W-0	W-0	W-0	W-0	W-0	W-0
NVMKEY<7:0>							
bit 7							bit 0

Legend:			
R = Readable bit	W = Writable bit	U = Unimplemented bit, read as ‘0’	
-n = Value at POR	‘1’ = Bit is set	‘0’ = Bit is cleared	x = Bit is unknown

bit 15-8 **Unimplemented:** Read as ‘0’

bit 7-0 **NVMKEY<7:0>:** Key Register bits (write-only)

© 2011-2012 Microchip Technology Inc.

6.0 RESETS

Note 1: This data sheet summarizes the features of the dsPIC33FJ06GS001/101A/102A/202A and dsPIC33FJ09GS302 families of devices. It is not intended to be a comprehensive reference source. To complement the information in this data sheet, refer to **Section 8. "Reset"** (DS70192) in the "*dsPIC33F/PIC24H Family Reference Manual*", which is available from the Microchip web site (www.microchip.com).

2: Some registers and associated bits described in this section may not be available on all devices. Refer to **Section 4.0 "Memory Organization"** in this data sheet for device-specific register and bit information.

The Reset module combines all Reset sources and controls the device Master Reset Signal, $\overline{\text{SYSRST}}$. The following is a list of device Reset sources:

- POR: Power-on Reset
- BOR: Brown-out Reset
- $\overline{\text{MCLR}}$: Master Clear Pin Reset
- SWR: Software `RESET` Instruction
- WDTO: Watchdog Timer Reset
- CM: Configuration Mismatch Reset
- TRAPR: Trap Conflict Reset
- IOPUWR: Illegal Condition Device Reset
  - Illegal Opcode Reset
  - Uninitialized W Register Reset
  - Security Reset

A simplified block diagram of the Reset module is shown in Figure 6-1.

Any active source of Reset will make the $\overline{\text{SYSRST}}$ signal active. On system Reset, some of the registers associated with the CPU and peripherals are forced to a known Reset state, and some are unaffected.

Note: Refer to the specific peripheral section or **Section 3.0 "CPU"** of this data sheet for register Reset states.

All types of device Reset sets a corresponding status bit in the RCON register to indicate the type of Reset (see Register 6-1).

A POR clears all the bits (except for the POR (RCON<0> bit) that are set. The user application can set or clear any bit, at any time, during code execution. The RCON bits only serve as status bits. Setting a particular Reset status bit in software does not cause a device Reset to occur.

The RCON register also has other bits associated with the Watchdog Timer and device power-saving states. The function of these bits is discussed in other sections of this manual.

Note: The status bits in the RCON register should be cleared after they are read so that the next RCON register value after a device Reset is meaningful.

FIGURE 6-1: RESET SYSTEM BLOCK DIAGRAM

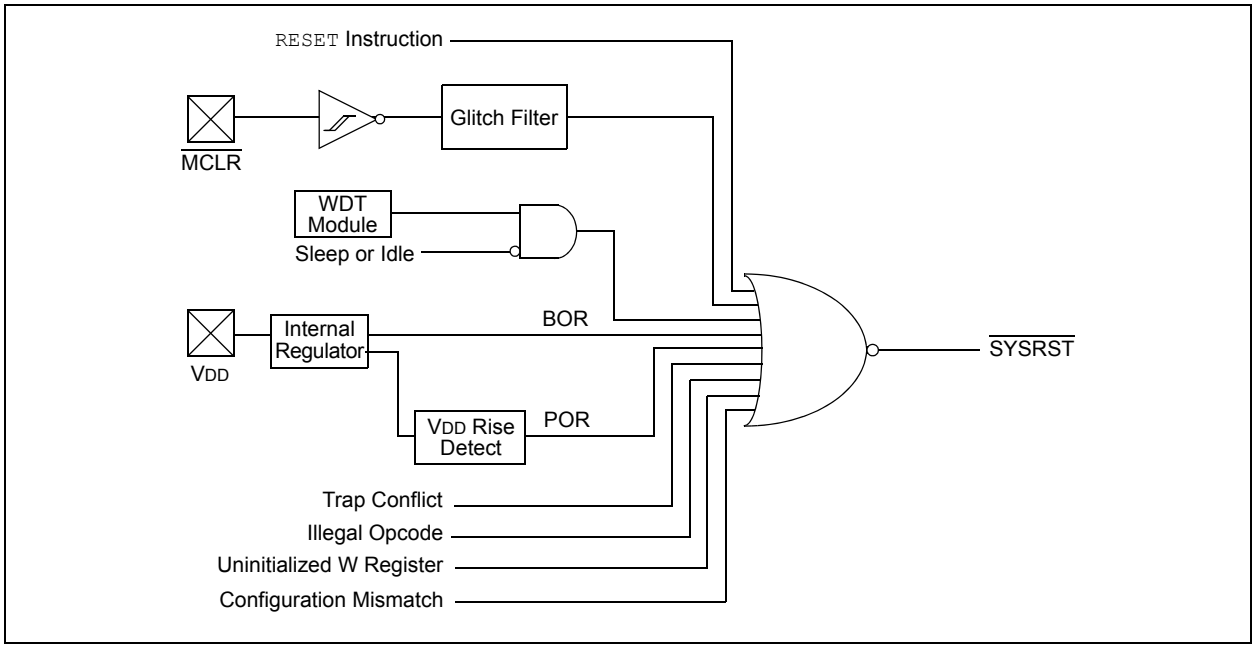

6.1 Reset Control Register

REGISTER 6-1: RCON: RESET CONTROL REGISTER(1)

R/W-0	R/W-0	U-0	U-0	U-0	U-0	R/W-0	R/W-0
TRAPR	IOPUWR	—	—	—	—	CM	VREGS
bit 15							bit 8

R/W-0	R/W-0	R/W-0	R/W-0	R/W-0	R/W-0	R/W-1	R/W-1
EXTR	SWR	SWDTEN(2)	WDTO	SLEEP	IDLE	BOR	POR
bit 7							bit 0

Legend:			
R = Readable bit	W = Writable bit	U = Unimplemented bit, read as ‘0’	
-n = Value at POR	‘1’ = Bit is set	‘0’ = Bit is cleared	x = Bit is unknown

bit 15 **TRAPR:** Trap Reset Flag bit
1 = A Trap Conflict Reset has occurred
0 = A Trap Conflict Reset has not occurred

bit 14 **IOPUWR:** Illegal Opcode or Uninitialized W Access Reset Flag bit
1 = An illegal opcode detection, an illegal address mode or uninitialized W register used as an Address Pointer caused a Reset
0 = An illegal opcode or uninitialized W Reset has not occurred

bit 13-10 **Unimplemented:** Read as ‘0’

bit 9 **CM:** Configuration Mismatch Flag bit
1 = A Configuration Mismatch Reset has occurred
0 = A Configuration Mismatch Reset has NOT occurred

bit 8 **VREGS:** Voltage Regulator Standby During Sleep bit
1 = Voltage regulator is active during Sleep
0 = Voltage regulator goes into Standby mode during Sleep

bit 7 **EXTR:** External Reset Pin ($\overline{\text{MCLR}}$) bit
1 = A Master Clear (pin) Reset has occurred
0 = A Master Clear (pin) Reset has not occurred

bit 6 **SWR:** Software Reset Flag (Instruction) bit
1 = A RESET instruction has been executed
0 = A RESET instruction has not been executed

bit 5 **SWDTEN:** Software Enable/Disable of WDT bit(2)
1 = WDT is enabled
0 = WDT is disabled

bit 4 **WDTO:** Watchdog Timer Time-out Flag bit
1 = WDT time-out has occurred
0 = WDT time-out has not occurred

bit 3 **SLEEP:** Wake-up from Sleep Flag bit
1 = Device has been in Sleep mode
0 = Device has not been in Sleep mode

bit 2 **IDLE:** Wake-up from Idle Flag bit
1 = Device was in Idle mode
0 = Device was not in Idle mode

Note 1: All of the Reset status bits can be set or cleared in software. Setting one of these bits in software does not cause a device Reset.

2: If the FWDTEN Configuration bit is ‘1’ (unprogrammed), the WDT is always enabled, regardless of the SWDTEN bit setting.

© 2011-2012 Microchip Technology Inc.

REGISTER 6-1: RCON: RESET CONTROL REGISTER(1) (CONTINUED)

bit 1 **BOR:** Brown-out Reset Flag bit

1 = A Brown-out Reset has occurred
0 = A Brown-out Reset has not occurred

bit 0 **POR:** Power-on Reset Flag bit

1 = A Power-on Reset has occurred
0 = A Power-on Reset has not occurred

Note 1: All of the Reset status bits can be set or cleared in software. Setting one of these bits in software does not cause a device Reset.

2: If the FWDTEN Configuration bit is '1' (unprogrammed), the WDT is always enabled, regardless of the SWDTEN bit setting.

6.2 System Reset

There are two types of Reset:

- Cold Reset
- Warm Reset

A cold Reset is the result of a Power-on Reset (POR) or a Brown-out Reset (BOR). On a cold Reset, the FNOSC Configuration bits in the FOSC Configuration register select the device clock source.

A warm Reset is the result of all the other Reset sources, including the `RESET` instruction. On warm Reset, the device will continue to operate from the current clock source, as indicated by the Current Oscillator Selection bits (COSC<2:0>) in the Oscillator Control register (OSCCON<14:12>).

The device is kept in a Reset state until the system power supplies have stabilized at appropriate levels and the oscillator clock is ready. The sequence in which this occurs is provided in Figure 6-2.

TABLE 6-1: OSCILLATOR DELAY

Oscillator Mode	Oscillator Start-up Delay	Oscillator Start-up Timer	PLL Lock Time	Total Delay
FRC, FRCDIV16, FRCDIVN	T_{OSCD}(1)	—	—	T_{OSCD}(1)
FRCPLL	T_{OSCD}(1)	—	T_{LOCK}(3)	T_{OSCD} + T_{LOCK}(1,3)
XT	T_{OSCD}(1)	T_{OST}(2)	—	T_{OSCD} + T_{OST}(1,2)
HS	T_{OSCD}(1)	T_{OST}(2)	—	T_{OSCD} + T_{OST}(1,2)
EC	—	—	—	—
XTPLL	T_{OSCD}(1)	T_{OST}(2)	T_{LOCK}(3)	T_{OSCD} + T_{OST} + T_{LOCK}(1,2,3)
HSPLL	T_{OSCD}(1)	T_{OST}(2)	T_{LOCK}(3)	T_{OSCD} + T_{OST} + T_{LOCK}(1,2,3)
ECPLL	—	—	T_{LOCK}(3)	T_{LOCK}(3)
LPRC	T_{OSCD}(1)	—	—	T_{OSCD}(1)

Note 1: T_{OSCD} = Oscillator start-up delay (1.1 μs max. for FRC, 70 μs max. for LPRC). Crystal oscillator start-up times vary with crystal characteristics, load capacitance, etc.

2: T_{OST} = Oscillator Start-up Timer (OST) delay (1024 oscillator clock period). For example, T_{OST} = 102.4 μs for a 10 MHz crystal and T_{OST} = 32 ms for a 32 kHz crystal.

3: T_{LOCK} = PLL lock time (1.5 ms nominal) if PLL is enabled.

© 2011-2012 Microchip Technology Inc.

FIGURE 6-2: SYSTEM RESET TIMING

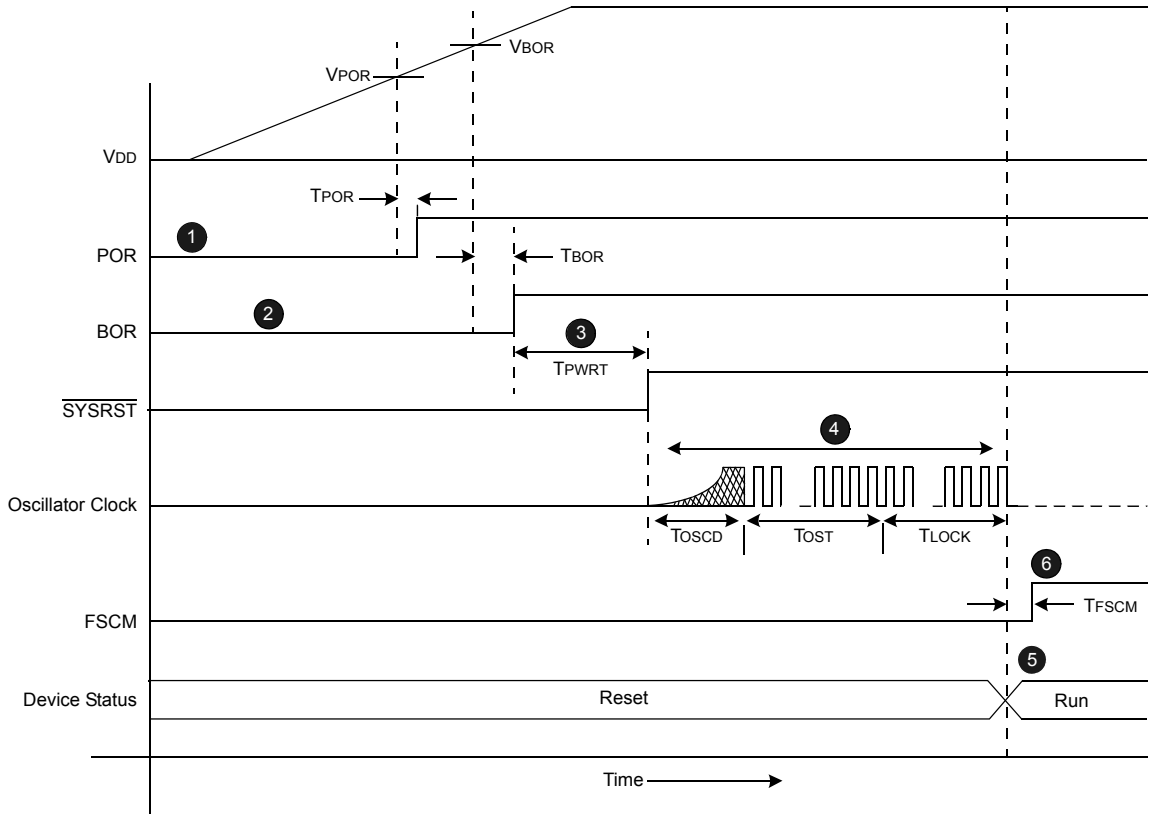

Note 1: **POR:** A POR circuit holds the device in Reset when the power supply is turned on. The POR circuit is active until VDD crosses the VPOR threshold and the delay, TPOR, has elapsed.

2: **BOR:** The on-chip voltage regulator has a BOR circuit that keeps the device in Reset until VDD crosses the VBOR threshold and the delay, TBOR, has elapsed. The delay, TBOR, ensures the voltage regulator output becomes stable.

3: **PWRT Timer:** The programmable Power-up Timer continues to hold the processor in Reset for a specific period of time (TPWRT) after a BOR. The delay, TPWRT, ensures that the system power supplies have stabilized at the appropriate level for full-speed operation. After the delay, TPWRT has elapsed and the SYSRST becomes inactive, which in turn, enables the selected oscillator to start generating clock cycles.

4: **Oscillator Delay:** The total delay for the clock to be ready for various clock source selections is given in Table 6-1. Refer to **Section 8.0 "Oscillator Configuration"** for more information.

5: When the oscillator clock is ready, the processor begins execution from location, 0x000000. The user application programs a `GOTO` instruction at the Reset address, which redirects program execution to the appropriate start-up routine.

6: If the Fail-Safe Clock Monitor (FSCM) is enabled, it begins to monitor the system clock when the system clock is ready and the delay, TFSCM, has elapsed.

TABLE 6-2: OSCILLATOR PARAMETERS

Symbol	Parameter	Value
VPOR	POR threshold	1.8V nominal
TPOR	POR extension time	30 μs maximum
VBOR	BOR threshold	2.65V nominal
TBOR	BOR extension time	100 μs maximum
TPWRT	Programmable Power-up Time delay	0-128 ms nominal
TFSCM	Fail-Safe Clock Monitor delay	900 μs maximum

Note: When the device exits the Reset condition (begins normal operation), the device operating parameters (voltage, frequency, temperature, etc.) must be within their operating ranges; otherwise, the device may not function correctly. The user application must ensure that the delay between the time power is first applied, and the time SYSRST becomes inactive, is long enough to get all operating parameters within the specification.

6.3 Power-on Reset (POR)

A Power-on Reset (POR) circuit ensures the device is reset from power-on. The POR circuit is active until VDD crosses the VPOR threshold and the delay, TPOR, has elapsed. The delay, TPOR, ensures the internal device bias circuits become stable.

The device supply voltage characteristics must meet the specified starting voltage and rise rate requirements to generate the POR. Refer to **Section 25.0 "Electrical Characteristics"** for details.

The POR status (POR) bit in the Reset Control (RCON<0>) register is set to indicate the Power-on Reset.

6.4 Brown-out Reset (BOR) and Power-up Timer (PWRT)

The on-chip regulator has a Brown-out Reset (BOR) circuit that resets the device when the VDD is too low (VDD < VBOR) for proper device operation. The BOR circuit keeps the device in Reset until VDD crosses the VBOR threshold and the delay, TBOR, has elapsed. The delay, TBOR, ensures the voltage regulator output becomes stable.

The BOR status bit in the Reset Control (RCON<1>) register is set to indicate the Brown-out Reset.

The device will not run at full speed after a BOR, as the VDD should rise to acceptable levels for full-speed operation. The PWRT provides a Power-up Time Delay (TPWRT) to ensure that the system power supplies have stabilized at the appropriate levels for full-speed operation before the $\overline{\text{SYSRST}}$ is released.

Figure 6-3 shows the typical brown-out scenarios. The Reset delay (TBOR + TPWRT) is initiated each time VDD rises above the VBOR trip point.

FIGURE 6-3: BROWN-OUT SITUATIONS

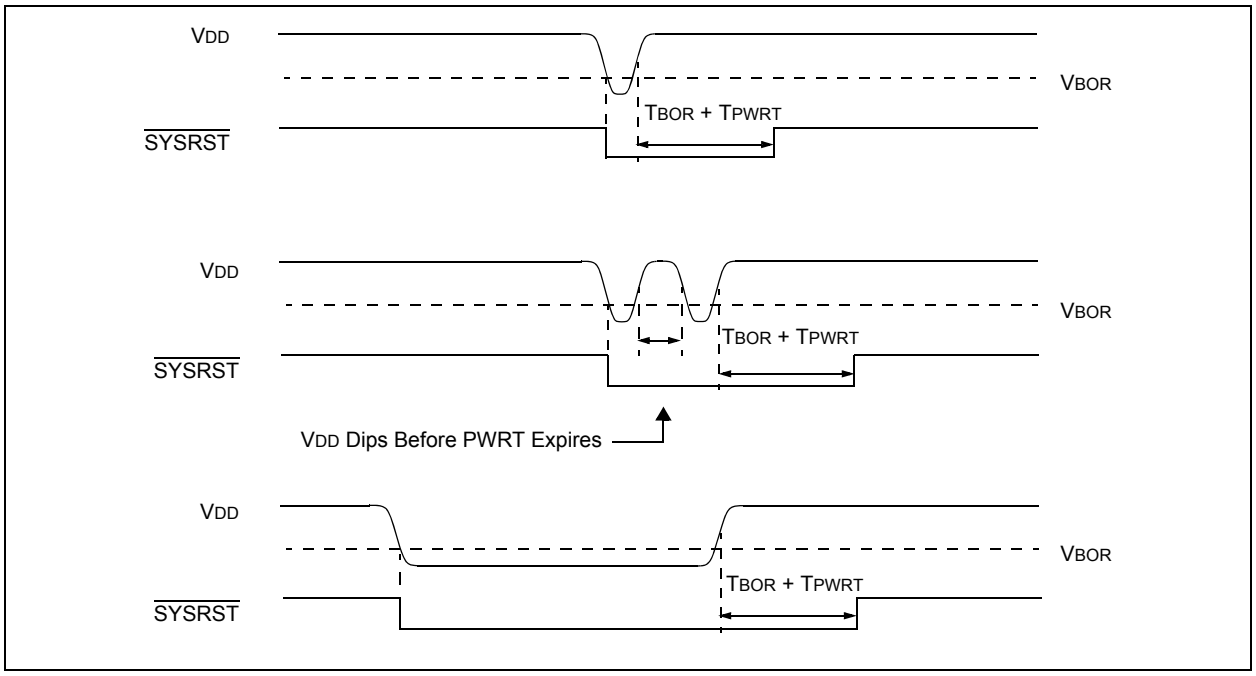

© 2011-2012 Microchip Technology Inc.

6.5 External Reset (EXTR)

The external Reset is generated by driving the $\overline{\text{MCLR}}$ pin low. The $\overline{\text{MCLR}}$ pin is a Schmitt trigger input with an additional glitch filter. Reset pulses that are longer than the minimum pulse width will generate a Reset. Refer to **Section 25.0 "Electrical Characteristics"** for minimum pulse width specifications. The external Reset ($\overline{\text{MCLR}}$) pin (EXTR) bit in the Reset Control (RCON) register is set to indicate the $\overline{\text{MCLR}}$ Reset.

6.5.1 EXTERNAL SUPERVISORY CIRCUIT

Many systems have external supervisory circuits that generate Reset signals to reset multiple devices in the system. This external Reset signal can be directly connected to the $\overline{\text{MCLR}}$ pin to reset the device when the rest of the system is reset.

6.5.2 INTERNAL SUPERVISORY CIRCUIT

When using the internal power supervisory circuit to reset the device, the external Reset pin ($\overline{\text{MCLR}}$) should be tied directly or resistively to VDD. In this case, the $\overline{\text{MCLR}}$ pin will not be used to generate a Reset. The external Reset pin ($\overline{\text{MCLR}}$) does not have an internal pull-up and must not be left unconnected.

6.6 Software RESET Instruction (SWR)

Whenever the RESET instruction is executed, the device will assert $\overline{\text{SYSRST}}$, placing the device in a special Reset state. This Reset state will not re-initialize the clock. The clock source in effect prior to the RESET instruction will still remain. $\overline{\text{SYSRST}}$ is released at the next instruction cycle and the Reset vector fetch will commence.

The Software Reset (SWR) flag (instruction) in the Reset Control register (RCON<6>) is set to indicate the software Reset.

6.7 Watchdog Time-out Reset (WDTO)

Whenever a Watchdog Timer time-out occurs, the device will asynchronously assert $\overline{\text{SYSRST}}$. The clock source will remain unchanged. A WDT time-out during Sleep or Idle mode will wake-up the processor, but will not reset the processor.

The Watchdog Timer Time-out (WDTO) flag in the Reset Control (RCON<4>) register is set to indicate the Watchdog Timer Reset. Refer to **Section 22.4 "Watchdog Timer (WDT)"** for more information on Watchdog Reset.

6.8 Trap Conflict Reset

If a lower priority hard trap occurs, while a higher priority trap is being processed, a hard Trap Conflict Reset occurs. The hard traps include exceptions of Priority Level 13 through Level 15, inclusive. The address error (Level 13) and oscillator error (Level 14) traps fall into this category.

The Trap Reset (TRAPR) flag in the Reset Control register (RCON<15>) is set to indicate the Trap Conflict Reset. Refer to **Section 7.0 "Interrupt Controller"** for more information on Trap Conflict Resets.

6.9 Illegal Condition Device Reset

An illegal condition device Reset occurs due to the following sources:

- Illegal Opcode Reset
- Uninitialized W Register Reset
- Security Reset

The illegal opcode or Uninitialized W Access Reset (IOPUWR) flag in the Reset Control register (RCON<14>) is set to indicate the illegal condition device Reset.

6.9.1 ILLEGAL OPCODE RESET

A device Reset is generated if the device attempts to execute an illegal opcode value that is fetched from program memory.

The Illegal Opcode Reset function can prevent the device from executing program memory sections that are used to store constant data. To take advantage of the Illegal Opcode Reset, use only the lower 16 bits of each program memory section to store the data values. The upper 8 bits should be programmed with 0x3F, which is an illegal opcode value.

6.9.2 UNINITIALIZED W REGISTER RESET

Any attempt to use the uninitialized W register as an Address Pointer will Reset the device. The W register array (with the exception of W15) is cleared during all Resets and is considered uninitialized until written to.

6.10 Using the RCON Status Bits

The user application can read the Reset Control (RCON) register after any device Reset to determine the cause of the Reset.

> **Note:** The status bits in the RCON register should be cleared after they are read so that the next RCON register value, after a device Reset, will be meaningful.

Table 6-3 provides a summary of the Reset flag bit operation.

TABLE 6-3: RESET FLAG BIT OPERATION

Flag Bit	Set by:	Cleared by:
TRAPR (RCON<15>)	Trap conflict event	POR, BOR
IOPWR (RCON<14>)	Illegal opcode or uninitialized W register access or Security Reset	POR, BOR
CM (RCON<9>)	Configuration Mismatch	POR, BOR
EXTR (RCON<7>)	$\overline{\text{MCLR}}$ Reset	POR
SWR (RCON<6>)	`RESET` instruction	POR, BOR
WDTO (RCON<4>)	WDT time-out	`PWRSAV` instruction, `CLRWDT` instruction, POR, BOR
SLEEP (RCON<3>)	`PWRSAV #SLEEP` instruction	POR, BOR
IDLE (RCON<2>)	`PWRSAV #IDLE` instruction	POR, BOR
BOR (RCON<1>)	POR, BOR	—
POR (RCON<0>)	POR	—

Note: All Reset flag bits can be set or cleared by user software.

© 2011-2012 Microchip Technology Inc.

7.0 INTERRUPT CONTROLLER

Note 1: This data sheet summarizes the features of the dsPIC33FJ06GS001/101A/102A/202A and dsPIC33FJ09GS302 families of devices. It is not intended to be a comprehensive reference source. To complement the information in this data sheet, refer to **Section 41. "Interrupts (Part IV)"** (DS70300) in the "*dsPIC33F/PIC24H Family Reference Manual*", which is available on the Microchip web site (www.microchip.com).

2: Some registers and associated bits described in this section may not be available on all devices. Refer to **Section 4.0 "Memory Organization"** in this data sheet for device-specific register and bit information.

The interrupt controller reduces the numerous peripheral interrupt request signals to a single interrupt request signal to the CPU. The controller has the following features:

- Up to eight processor exceptions and software traps
- Seven user-selectable priority levels
- Interrupt Vector Table (IVT) with up to 118 vectors
- A unique vector for each interrupt or exception source
- Fixed priority within a specified user priority level
- Alternate Interrupt Vector Table (AIVT) for debug support
- Fixed interrupt entry and return latencies

7.1 Interrupt Vector Table

The Interrupt Vector Table (IVT) is shown in Figure 7-1. The IVT resides in program memory, starting at location, 000004h. The IVT contains 126 vectors, consisting of eight non-maskable trap vectors, plus up to 118 sources of interrupt. In general, each interrupt source has its own vector. Each interrupt vector contains a 24-bit wide address. The value programmed into each interrupt vector location is the starting address of the associated Interrupt Service Routine (ISR).

Interrupt vectors are prioritized in terms of their natural priority. This priority is linked to their position in the vector table. Lower addresses generally have a higher natural priority. For example, the interrupt associated with Vector 0 will take priority over interrupts at any other vector address.

The devices implement up to 28 unique interrupts and four non-maskable traps. These are summarized in Table 7-1.

7.1.1 ALTERNATE INTERRUPT VECTOR TABLE

The Alternate Interrupt Vector Table (AIVT) is located after the IVT, as shown in Figure 7-1. Access to the AIVT is provided by the ALTIVT control bit (INTCON2<15>). If the ALTIVT bit is set, all interrupt and exception processes use the alternate vectors instead of the default vectors. The alternate vectors are organized in the same manner as the default vectors.

The AIVT supports debugging by providing a means to switch between an application and a support environment without requiring the interrupt vectors to be reprogrammed. This feature also enables switching between applications for evaluation of different software algorithms at run time. If the AIVT is not needed, the AIVT should be programmed with the same addresses used in the IVT.

7.2 Reset Sequence

A device Reset is not a true exception because the interrupt controller is not involved in the Reset process. A device clears its registers in response to a Reset, which forces the PC to zero. The digital signal controller then begins program execution at location, 0x000000. A `GOTO` instruction at the Reset address can redirect program execution to the appropriate start-up routine.

Note: Any unimplemented or unused vector locations in the IVT and AIVT should be programmed with the address of a default interrupt handler routine that contains a `RESET` instruction.

FIGURE 7-1: dsPIC33FJ06GS001/101A/102A/202A and dsPIC33FJ09GS302 INTERRUPT VECTOR TABLE

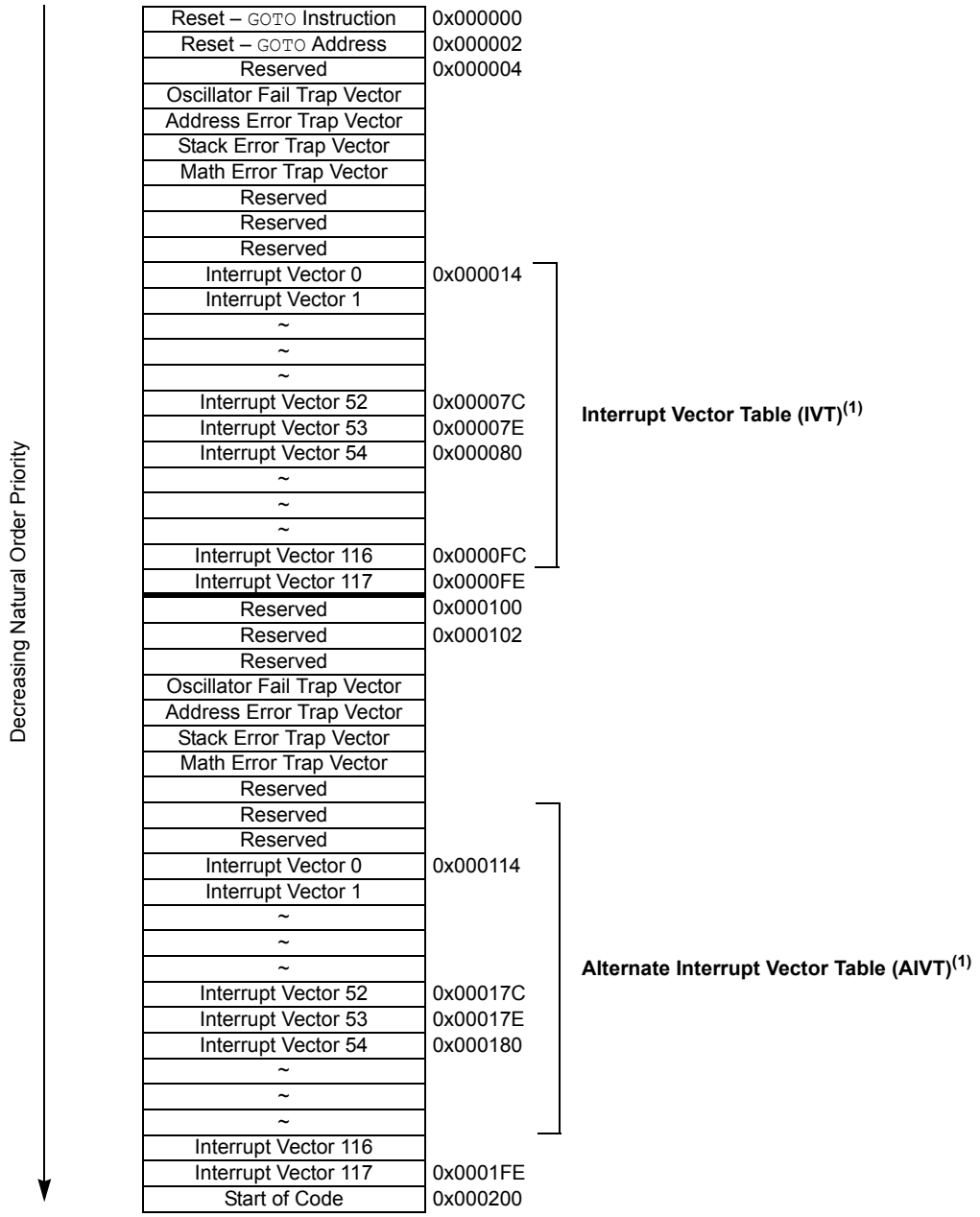

Note 1: See Table 7-1 for the list of implemented interrupt vectors.

© 2011-2012 Microchip Technology Inc.

TABLE 7-1: INTERRUPT VECTORS

Vector Number	Interrupt Request (IQR)	IVT Address	AIVT Address	Interrupt Source
Highest Natural Order Priority				
8	0	0x000014	0x000114	INT0 – External Interrupt 0
9	1	0x000016	0x000116	IC1 – Input Capture 1
10	2	0x000018	0x000118	OC1 – Output Compare 1
11	3	0x00001A	0x00011A	T1 – Timer1
12-14	4-6	0x00001C-0x000020	0x00011C-0x000120	Reserved
15	7	0x000022	0x000122	T2 – Timer2
16	8	0x000024	0x000124	Reserved
17	9	0x000026	0x000126	SPI1E – SPI1 Error
18	10	0x000028	0x000128	SPI1 – SPI1 Transfer Done
19	11	0x00002A	0x00012A	U1RX – UART1 Receiver
20	12	0x00002C	0x00012C	U1TX – UART1 Transmitter
21	13	0x00002E	0x00012E	ADC – ADC Group Convert Done
22	14	0x000030	0x000130	Reserved
23	15	0x000032	0x000132	Reserved
24	16	0x000034	0x000134	SI2C1 – I2C1 Slave Event
25	17	0x000036	0x000136	MI2C1 – I2C1 Master Event
26	18	0x000038	0x000138	CMP1 – Analog Comparator 1 Interrupt
27	19	0x00003A	0x00013A	CN – Input Change Notification Interrupt
28	20	0x00003C	0x00013C	INT1 – External Interrupt 1
29-36	21-28	0x00003E-0x0004C	0x00013E-0x00014C	Reserved
37	29	0x00004E	0x00014E	INT2 – External Interrupt 2
38-64	30-56	0x000050-0x000084	0x000150-0x000184	Reserved
65	57	0x000086	0x000186	PSEM – PWM Special Event Match Interrupt
66-72	58-64	0x000088-0x000094	0x000188-0x000194	Reserved
73	65	0x000096	0x000196	U1E – UART1 Error Interrupt
74-87	66-79	0x000098-0x0000B2	0x000198-0x0001B2	Reserved
88	80	0x0000B4	0x0001B4	JTAG – Data Ready
89-101	81-93	0x0000B6-0x0000CE	0x0001B6-0x0001CE	Reserved
102	94	0x0000D0	0x0001D0	PWM1 – PWM1 Interrupt
103	95	0x0000D2	0x0001D2	PWM2 – PWM2 Interrupt
104	96	0x0000D4	0x0001D4	Reserved
105	97	0x0000D6	0x0001D6	PWM4 – PWM4 Interrupt
106-110	98-102	0x0000D8-0x0000E0	0x0001D8-0x0001E0	Reserved
111	103	0x0000E2	0x00001E2	CMP2 – Analog Comparator 2 Interrupt
112-117	104-109	0x0000E4-0x0000EE	0x0001E4-0x0001EE	Reserved
118	110	0x0000F0	0x0001F0	ADC Pair 0 Convert Done
119	111	0x0000F2	0x0001F2	ADC Pair 1 Convert Done
120	112	0x0000F4	0x0001F4	ADC Pair 2 Convert Done
121	113	0x0000F6	0x0001F6	ADC Pair 3 Convert Done
122	114	0x0000F8	0x0001F8	Reserved
123	115	0x0000FA	0x0001FA	Reserved
124	116	0x0000FC	0x0001FC	ADC Pair 6 Convert Done
125	117	0x0000FE	0x0001FE	Reserved
Lowest Natural Order Priority				

7.3 Interrupt Control and Status Registers

The following registers are implemented for the interrupt controller:

- INTCON1
- INTCON2
- IFSx
- IECx
- IPCx
- INTTREG

7.3.1 INTCON1 AND INTCON2

Global interrupt control functions are controlled from INTCON1 and INTCON2. INTCON1 contains the Interrupt Nesting Disable (NSTDIS) bit as well as the control and status flags for the processor trap sources. The INTCON2 register controls the external interrupt request signal behavior and the use of the Alternate Interrupt Vector Table.

7.3.2 IFSx

The IFSx registers maintain all of the interrupt request flags. Each source of interrupt has a status bit, which is set by the respective peripherals or external signal and is cleared via software.

7.3.3 IECx

The IECx registers maintain all of the interrupt enable bits. These control bits are used to individually enable interrupts from the peripherals or external signals.

7.3.4 IPCx

The IPCx registers are used to set the Interrupt Priority Level (IPL) for each source of interrupt. Each user interrupt source can be assigned to one of eight priority levels.

7.3.5 INTTREG

The INTTREG register contains the associated interrupt vector number and the new CPU Interrupt Priority Level, which are latched into the Vector Number (VECNUM<6:0>) and Interrupt Level (ILR<3:0>) bit fields in the INTTREG register. The new Interrupt Priority Level is the priority of the pending interrupt.

The interrupt sources are assigned to the IFSx, IECx and IPCx registers in the same sequence that they are listed in Table 7-1. For example, the INT0 (External Interrupt 0) is shown as having Vector Number 8 and a natural order priority of 0. Thus, the INT0IF bit is found in IFS0<0>, the INT0IE bit is found in IEC0<0> and the INT0IP bits are found in the first position of IPC0 (IPC0<2:0>).

7.3.6 STATUS/CONTROL REGISTERS

Although they are not specifically part of the interrupt control hardware, two of the CPU Control registers contain bits that control interrupt functionality.

- The CPU STATUS Register, SR, contains the IPL<2:0> bits (SR<7:5>). These bits indicate the current CPU Interrupt Priority Level. The user can change the current CPU priority level by writing to the IPL bits.
- The CORCON register contains the IPL3 bit, which together with IPL<2:0>, indicates the current CPU priority level. IPL3 is a read-only bit so that trap events cannot be masked by the user software.

All Interrupt registers are described in Register 7-1 through Register 7-35.

© 2011-2012 Microchip Technology Inc.

REGISTER 7-1: SR: CPU STATUS REGISTER(1)

R-0	R-0	R/C-0	R/C-0	R-0	R/C-0	R-0	R/W-0
OA	OB	SA	SB	OAB	SAB	DA	DC
bit 15							bit 8

R/W-0(3)	R/W-0(3)	R/W-0(3)	R-0	R/W-0	R/W-0	R/W-0	R/W-0
IPL<2:0>(2)			RA	N	OV	Z	C
bit 7							bit 0

Legend:	C = Clearable bit	U = Unimplemented bit, read as ‘0’
R = Readable bit	W = Writable bit	-n = Value at POR
‘1’ = Bit is set	‘0’ = Bit is cleared	x = Bit is unknown

bit 7-5 **IPL<2:0>:** CPU Interrupt Priority Level Status bits(2,3)

`111` = CPU Interrupt Priority Level is 7 (15), user interrupts are disabled
`110` = CPU Interrupt Priority Level is 6 (14)
`101` = CPU Interrupt Priority Level is 5 (13)
`100` = CPU Interrupt Priority Level is 4 (12)
`011` = CPU Interrupt Priority Level is 3 (11)
`010` = CPU Interrupt Priority Level is 2 (10)
`001` = CPU Interrupt Priority Level is 1 (9)
`000` = CPU Interrupt Priority Level is 0 (8)

Note 1: For complete register details, see Register 3-1.
2: The IPL<2:0> bits are concatenated with the IPL3 bit (CORCON<3>) to form the CPU Interrupt Priority Level. The value in parentheses indicates the IPL if IPL3 = `1`. User interrupts are disabled when IPL3 = `1`.
3: The IPL<2:0> status bits are read-only when NSTDIS (INTCON1<15>) = `1`.

REGISTER 7-2: CORCON: CORE CONTROL REGISTER(1)

U-0	U-0	U-0	R/W-0	R/W-0	R-0	R-0	R-0
—	—	—	US	EDT	DL<2:0>		
bit 15							bit 8

R/W-0	R/W-0	R/W-1	R/W-0	R/C-0	R/W-0	R/W-0	R/W-0
SATA	SATB	SATDW	ACCSAT	IPL3(2)	PSV	RND	IF
bit 7							bit 0

Legend:	C = Clearable bit		
R = Readable bit	W = Writable bit	-n = Value at POR	‘1’ = Bit is set
0’ = Bit is cleared	‘x = Bit is unknown	U = Unimplemented bit, read as ‘0’	

bit 3 **IPL3:** CPU Interrupt Priority Level Status bit 3(2)

`1` = CPU Interrupt Priority Level is greater than 7
`0` = CPU Interrupt Priority Level is 7 or less

Note 1: For complete register details, see Register 3-2.
2: The IPL3 bit is concatenated with the IPL<2:0> bits (SR<7:5>) to form the CPU Interrupt Priority Level.

REGISTER 7-3: INTCON1: INTERRUPT CONTROL REGISTER 1

R/W-0	R/W-0	R/W-0	R/W-0	R/W-0	R/W-0	R/W-0	R/W-0
NSTDIS	OVAERR	OVBERR	COVAERR	COVBERR	OVATE	OVBTE	COVTE
bit 15							bit 8

R/W-0	R/W-0	U-0	R/W-0	R/W-0	R/W-0	R/W-0	U-0
SFTACERR	DIV0ERR	—	MATHERR	ADDRERR	STKERR	OSCFAIL	—
bit 7							bit 0

Legend:			
R = Readable bit	W = Writable bit	U = Unimplemented bit, read as ‘0’	
-n = Value at POR	‘1’ = Bit is set	‘0’ = Bit is cleared	x = Bit is unknown

bit 15 **NSTDIS:** Interrupt Nesting Disable bit
1 = Interrupt nesting is disabled
0 = Interrupt nesting is enabled

bit 14 **OVAERR:** Accumulator A Overflow Trap Flag bit
1 = Trap was caused by overflow of Accumulator A
0 = Trap was not caused by overflow of Accumulator A

bit 13 **OVBERR:** Accumulator B Overflow Trap Flag bit
1 = Trap was caused by overflow of Accumulator B
0 = Trap was not caused by overflow of Accumulator B

bit 12 **COVAERR:** Accumulator A Catastrophic Overflow Trap Flag bit
1 = Trap was caused by catastrophic overflow of Accumulator A
0 = Trap was not caused by catastrophic overflow of Accumulator A

bit 11 **COVBERR:** Accumulator B Catastrophic Overflow Trap Flag bit
1 = Trap was caused by catastrophic overflow of Accumulator B
0 = Trap was not caused by catastrophic overflow of Accumulator B

bit 10 **OVATE:** Accumulator A Overflow Trap Enable bit
1 = Trap overflow of Accumulator A
0 = Trap is disabled

bit 9 **OVBTE:** Accumulator B Overflow Trap Enable bit
1 = Trap overflow of Accumulator B
0 = Trap is disabled

bit 8 **COVTE:** Catastrophic Overflow Trap Enable bit
1 = Trap on catastrophic overflow of Accumulator A or B is enabled
0 = Trap is disabled

bit 7 **SFTACERR:** Shift Accumulator Error Status bit
1 = Math error trap was caused by an invalid accumulator shift
0 = Math error trap was not caused by an invalid accumulator shift

bit 6 **DIV0ERR:** Divide-by-Zero Error Trap Status bit
1 = Math error trap was caused by a divide-by-zero
0 = Math error trap was not caused by a divide-by-zero

bit 5 **Unimplemented:** Read as ‘0’

bit 4 **MATHERR:** Math Error Trap Status bit
1 = Math error trap has occurred
0 = Math error trap has not occurred

bit 3 **ADDRERR:** Address Error Trap Status bit
1 = Address error trap has occurred
0 = Address error trap has not occurred

© 2011-2012 Microchip Technology Inc.

REGISTER 7-3: INTCON1: INTERRUPT CONTROL REGISTER 1 (CONTINUED)

bit 2	**STKERR:** Stack Error Trap Status bit 1 = Stack error trap has occurred 0 = Stack error trap has not occurred
bit 1	**OSCFAIL:** Oscillator Failure Trap Status bit 1 = Oscillator failure trap has occurred 0 = Oscillator failure trap has not occurred
bit 0	**Unimplemented:** Read as ‘0’

REGISTER 7-4: INTCON2: INTERRUPT CONTROL REGISTER 2

R/W-0	R-0	U-0	U-0	U-0	U-0	U-0	U-0
ALTIVT	DISI	—	—	—	—	—	—
bit 15							bit 8

U-0	U-0	U-0	U-0	U-0	R/W-0	R/W-0	R/W-0
—	—	—	—	—	INT2EP	INT1EP	INT0EP
bit 7							bit 0

Legend:			
R = Readable bit	W = Writable bit	U = Unimplemented bit, read as ‘0’	
-n = Value at POR	‘1’ = Bit is set	‘0’ = Bit is cleared	x = Bit is unknown

bit 15 **ALTIVT:** Enable Alternate Interrupt Vector Table bit
`1` = Uses alternate vector table
`0` = Uses standard (default) vector table

bit 14 **DISI:** `DISI` Instruction Status bit
`1` = `DISI` instruction is active
`0` = `DISI` instruction is not active

bit 13-3 **Unimplemented:** Read as ‘`0`’

bit 2 **INT2EP:** External Interrupt 2 Edge Detect Polarity Select bit
`1` = Interrupt on negative edge
`0` = Interrupt on positive edge

bit 1 **INT1EP:** External Interrupt 1 Edge Detect Polarity Select bit
`1` = Interrupt on negative edge
`0` = Interrupt on positive edge

bit 0 **INT0EP:** External Interrupt 0 Edge Detect Polarity Select bit
`1` = Interrupt on negative edge
`0` = Interrupt on positive edge

© 2011-2012 Microchip Technology Inc.

REGISTER 7-5: IFS0: INTERRUPT FLAG STATUS REGISTER 0

U-0	U-0	R/W-0	R/W-0	R/W-0	R/W-0	R/W-0	U-0
—	—	ADIF	U1TXIF(1)	U1RXIF(1)	SPI1IF(1)	SPI1EIF(1)	—
bit 15							bit 8

R/W-0	U-0	U-0	U-0	R/W-0	R/W-0	R/W-0	R/W-0
T2IF	—	—	—	T1IF	OC1IF(1)	IC1IF(2)	INT0IF
bit 7							bit 0

Legend:			
R = Readable bit	W = Writable bit	U = Unimplemented bit, read as ‘0’	
-n = Value at POR	‘1’ = Bit is set	‘0’ = Bit is cleared	x = Bit is unknown

bit 15-14 **Unimplemented:** Read as ‘0’

bit 13 **ADIF:** ADC Group Conversion Complete Interrupt Flag Status bit
1 = Interrupt request has occurred
0 = Interrupt request has not occurred

bit 12 **U1TXIF:** UART1 Transmitter Interrupt Flag Status bit(1)
1 = Interrupt request has occurred
0 = Interrupt request has not occurred

bit 11 **U1RXIF:** UART1 Receiver Interrupt Flag Status bit(1)
1 = Interrupt request has occurred
0 = Interrupt request has not occurred

bit 10 **SPI1IF:** SPI1 Event Interrupt Flag Status bit(1)
1 = Interrupt request has occurred
0 = Interrupt request has not occurred

bit 9 **SPI1EIF:** SPI1 Error Interrupt Flag Status bit(1)
1 = Interrupt request has occurred
0 = Interrupt request has not occurred

bit 8 **Unimplemented:** Read as ‘0’

bit 7 **T2IF:** Timer2 Interrupt Flag Status bit
1 = Interrupt request has occurred
0 = Interrupt request has not occurred

bit 6-4 **Unimplemented:** Read as ‘0’

bit 3 **T1IF:** Timer1 Interrupt Flag Status bit
1 = Interrupt request has occurred
0 = Interrupt request has not occurred

bit 2 **OC1IF:** Output Compare Channel 1 Interrupt Flag Status bit(1)
1 = Interrupt request has occurred
0 = Interrupt request has not occurred

bit 1 **IC1IF:** Input Capture Channel 1 Interrupt Flag Status bit(2)
1 = Interrupt request has occurred
0 = Interrupt request has not occurred

bit 0 **INT0IF:** External Interrupt 0 Flag Status bit
1 = Interrupt request has occurred
0 = Interrupt request has not occurred

Note 1: This bit is not implemented in the dsPIC33FJ06GS001 device.
2: This bit is not implemented in dsPIC33FJ06GS001/101A/102A devices.

REGISTER 7-6: IFS1: INTERRUPT FLAG STATUS REGISTER 1

U-0	U-0	R/W-0	U-0	U-0	U-0	U-0	U-0
—	—	INT2IF	—	—	—	—	—
bit 15							bit 8

U-0	U-0	U-0	R/W-0	R/W-0	R/W-0	R/W-0	R/W-0
—	—	—	INT1IF	CNIF	AC1IF(1	MI2C1IF	SI2C1IF
bit 7							bit 0

Legend:			
R = Readable bit	W = Writable bit	U = Unimplemented bit, read as ‘0’	
-n = Value at POR	‘1’ = Bit is set	‘0’ = Bit is cleared	x = Bit is unknown

bit 15-14 **Unimplemented:** Read as ‘0’

bit 13 **INT2IF:** External Interrupt 2 Flag Status bit
1 = Interrupt request has occurred
0 = Interrupt request has not occurred

bit 12-5 **Unimplemented:** Read as ‘0’

bit 4 **INT1IF:** External Interrupt 1 Flag Status bit
1 = Interrupt request has occurred
0 = Interrupt request has not occurred

bit 3 **CNIF:** Input Change Notification Interrupt Flag Status bit
1 = Interrupt request has occurred
0 = Interrupt request has not occurred

bit 2 **AC1IF:** Analog Comparator 1 Interrupt Flag Status bit(1)
1 = Interrupt request has occurred
0 = Interrupt request has not occurred

bit 1 **MI2C1IF:** I2C1 Master Events Interrupt Flag Status bit
1 = Interrupt request has occurred
0 = Interrupt request has not occurred

bit 0 **SI2C1IF:** I2C1 Slave Events Interrupt Flag Status bit
1 = Interrupt request has occurred
0 = Interrupt request has not occurred

Note 1: This bit is not implemented in dsPIC33FJ06GS101A/102A devices.

© 2011-2012 Microchip Technology Inc.

REGISTER 7-7: IFS3: INTERRUPT FLAG STATUS REGISTER 3

U-0	U-0	U-0	U-0	U-0	U-0	R/W-0	U-0
—	—	—	—	—	—	PSEMIF	—
bit 15							bit 8

U-0	U-0	U-0	U-0	U-0	U-0	U-0	U-0
—	—	—	—	—	—	—	—
bit 7							bit 0

Legend:			
R = Readable bit	W = Writable bit	U = Unimplemented bit, read as ‘0’	
-n = Value at POR	‘1’ = Bit is set	‘0’ = Bit is cleared	x = Bit is unknown

bit 15-10 **Unimplemented:** Read as ‘0’

bit 9 **PSEMIF:** PWM Special Event Match Interrupt Flag Status bit
1 = Interrupt request has occurred
0 = Interrupt request has not occurred

bit 8-0 **Unimplemented:** Read as ‘0’

REGISTER 7-8: IFS4: INTERRUPT FLAG STATUS REGISTER 4

U-0	U-0	U-0	U-0	U-0	U-0	U-0	U-0
—	—	—	—	—	—	—	—
bit 15							bit 8

U-0	U-0	U-0	U-0	U-0	U-0	R/W-0	U-0
—	—	—	—	—	—	U1EIF(1)	—
bit 7							bit 0

Legend:			
R = Readable bit	W = Writable bit	U = Unimplemented bit, read as ‘0’	
-n = Value at POR	‘1’ = Bit is set	‘0’ = Bit is cleared	x = Bit is unknown

bit 15-2 **Unimplemented:** Read as ‘0’

bit 1 **U1EIF:** UART1 Error Interrupt Flag Status bit(1)
1 = Interrupt request has occurred
0 = Interrupt request has not occurred

bit 0 **Unimplemented:** Read as ‘0’

Note 1: This bit is not implemented in the dsPIC33FJ06GS001 device.

REGISTER 7-9: IFS5: INTERRUPT FLAG STATUS REGISTER 5

R/W-0	R/W-0	U-0	U-0	U-0	U-0	U-0	U-0
PWM2IF(1)	PWM1IF	—	—	—	—	—	—
bit 15							bit 8

U-0	U-0	U-0	U-0	U-0	U-0	U-0	R/W-0
—	—	—	—	—	—	—	JTAGIF
bit 7							bit 0

Legend:			
R = Readable bit	W = Writable bit	U = Unimplemented bit, read as ‘0’	
-n = Value at POR	‘1’ = Bit is set	‘0’ = Bit is cleared	x = Bit is unknown

bit 15 **PWM2IF:** PWM2 Interrupt Flag Status bit(1)
1 = Interrupt request has occurred
0 = Interrupt request has not occurred

bit 14 **PWM1IF:** PWM1 Interrupt Flag Status bit
1 = Interrupt request has occurred
0 = Interrupt request has not occurred

bit 13-1 **Unimplemented:** Read as ‘0’

bit 0 **JTAGIF:** JTAG Interrupt Flag Status bit
1 = Interrupt request has occurred
0 = Interrupt request has not occurred

Note 1: This bit is not implemented in dsPIC33FJ06GS001/101A devices.

© 2011-2012 Microchip Technology Inc.

REGISTER 7-10: IFS6: INTERRUPT FLAG STATUS REGISTER 6

R/W-0	R/W-0	U-0	U-0	U-0	U-0	U-0	U-0
ADCP1IF	ADCP0IF	—	—	—	—	—	—
bit 15							bit 8

R/W-0	U-0	U-0	U-0	U-0	U-0	R/W-0	U-0
AC2IF(1)	—	—	—	—	—	PWM4IF(2)	—
bit 7							bit 0

Legend:			
R = Readable bit	W = Writable bit	U = Unimplemented bit, read as ‘0’	
-n = Value at POR	‘1’ = Bit is set	‘0’ = Bit is cleared	x = Bit is unknown

bit 15 **ADCP1IF:** ADC Pair 1 Conversion Done Interrupt Flag Status bit
1 = Interrupt request has occurred
0 = Interrupt request has not occurred

bit 14 **ADCP0IF:** ADC Pair 0 Conversion Done Interrupt Flag Status bit
1 = Interrupt request has occurred
0 = Interrupt request has not occurred

bit 13-8 **Unimplemented:** Read as ‘0’

bit 7 **AC2IF:** Analog Comparator 2 Interrupt Flag Status bit(1)
1 = Interrupt request has occurred
0 = Interrupt request has not occurred

bit 6-2 **Unimplemented:** Read as ‘0’

bit 1 **PWM4IF:** PWM4 Interrupt Flag Status bit(2)
1 = Interrupt request has occurred
0 = Interrupt request has not occurred

bit 0 **Unimplemented:** Read as ‘0’

Note 1: This bit is not implemented in dsPIC33FJ06GS101A/102A devices.
2: This bit is not implemented in dsPIC33FJ06GS102A/202A devices.

REGISTER 7-11: IFS7: INTERRUPT FLAG STATUS REGISTER 7

U-0	U-0	U-0	U-0	U-0	U-0	U-0	U-0
—	—	—	—	—	—	—	—
bit 15							bit 8

U-0	U-0	U-0	R/W-0	U-0	U-0	R/W-0	R/W-0
—	—	—	ADCP6IF	—	—	ADCP3IF(1)	ADCP2IF(2)
bit 7							bit 0

Legend:			
R = Readable bit	W = Writable bit	U = Unimplemented bit, read as ‘0’	
-n = Value at POR	‘1’ = Bit is set	‘0’ = Bit is cleared	x = Bit is unknown

bit 15-5 **Unimplemented:** Read as ‘0’

bit 4 **ADCP6IF:** ADC Pair 6 Conversion Done Interrupt Flag Status bit
1 = Interrupt request has occurred
0 = Interrupt request has not occurred

bit 3-2 **Unimplemented:** Read as ‘0’

bit 1 **ADCP3IF:** ADC Pair 3 Conversion Done Interrupt Flag Status bit(1)
1 = Interrupt request has occurred
0 = Interrupt request has not occurred

bit 0 **ADCP2IF:** ADC Pair 2 Conversion Done Interrupt Flag Status bit(2)
1 = Interrupt request has occurred
0 = Interrupt request has not occurred

Note 1: This bit is not implemented in dsPIC33FJ06GS102A/202A devices.
2: This bit is not implemented in dsPIC33FJ06GS001/101A devices.

© 2011-2012 Microchip Technology Inc.

REGISTER 7-12: IEC0: INTERRUPT ENABLE CONTROL REGISTER 0

U-0	U-0	R/W-0	R/W-0	R/W-0	R/W-0	R/W-0	U-0
—	—	ADIE	U1TXIE(1)	U1RXIE(1)	SPI1IE(1)	SPI1EIE(1)	—
bit 15							bit 8

R/W-0	U-0	U-0	U-0	R/W-0	R/W-0	R/W-0	R/W-0
T2IE	—	—	—	T1IE	OC1IE(1)	IC1IE(2)	INT0IE
bit 7							bit 0

Legend:			
R = Readable bit	W = Writable bit	U = Unimplemented bit, read as ‘0’	
-n = Value at POR	‘1’ = Bit is set	‘0’ = Bit is cleared	x = Bit is unknown

bit 15-14 **Unimplemented:** Read as ‘0’

bit 13 **ADIE:** ADC1 Conversion Complete Interrupt Enable bit
1 = Interrupt request is enabled
0 = Interrupt request is not enabled

bit 12 **U1TXIE:** UART1 Transmitter Interrupt Enable bit(1)
1 = Interrupt request is enabled
0 = Interrupt request is not enabled

bit 11 **U1RXIE:** UART1 Receiver Interrupt Enable bit(1)
1 = Interrupt request is enabled
0 = Interrupt request is not enabled

bit 10 **SPI1IE:** SPI1 Event Interrupt Enable bit(1)
1 = Interrupt request is enabled
0 = Interrupt request is not enabled

bit 9 **SPI1EIE:** SPI1 Event Interrupt Enable bit(1)
1 = Interrupt request is enabled
0 = Interrupt request is not enabled

bit 8 **Unimplemented:** Read as ‘0’

bit 7 **T2IE:** Timer2 Interrupt Enable bit
1 = Interrupt request is enabled
0 = Interrupt request is not enabled

bit 6-4 **Unimplemented:** Read as ‘0’

bit 3 **T1IE:** Timer1 Interrupt Enable bit
1 = Interrupt request is enabled
0 = Interrupt request is not enabled

bit 2 **OC1IE:** Output Compare Channel 1 Interrupt Enable bit(1)
1 = Interrupt request is enabled
0 = Interrupt request is not enabled

bit 1 **IC1IE:** Input Capture Channel 1 Interrupt Enable bit(2)
1 = Interrupt request is enabled
0 = Interrupt request not enabled

bit 0 **INT0IE:** External Interrupt 0 Enable bit
1 = Interrupt request is enabled
0 = Interrupt request is not enabled

Note 1: This bit is not implemented in dsPIC33FJ06GS001/101A/102A devices.
2: This bit is not implemented in the dsPIC33FJ06GS001 device.

REGISTER 7-13: IEC1: INTERRUPT ENABLE CONTROL REGISTER 1

U-0	U-0	R/W-0	U-0	U-0	U-0	U-0	U-0
—	—	INT2IE	—	—	—	—	—
bit 15							bit 8

U-0	U-0	U-0	R/W-0	R/W-0	R/W-0	R/W-0	R/W-0
—	—	—	INT1IE	CNIE	AC1IE(1)	MI2C1IE	SI2C1IE
bit 7							bit 0

Legend:			
R = Readable bit	W = Writable bit	U = Unimplemented bit, read as ‘0’	
-n = Value at POR	‘1’ = Bit is set	‘0’ = Bit is cleared	x = Bit is unknown

bit 15-14 **Unimplemented:** Read as ‘0’

bit 13 **INT2IE:** External Interrupt 2 Enable bit
1 = Interrupt request is enabled
0 = Interrupt request is not enabled

bit 12-5 **Unimplemented:** Read as ‘0’

bit 4 **INT1IE:** External Interrupt 1 Enable bit
1 = Interrupt request is enabled
0 = Interrupt request is not enabled

bit 3 **CNIE:** Input Change Notification Interrupt Enable bit
1 = Interrupt request is enabled
0 = Interrupt request is not enabled

bit 2 **AC1IE:** Analog Comparator 1 Interrupt Enable bit(1)
1 = Interrupt request is enabled
0 = Interrupt request is not enabled

bit 1 **MI2C1IE:** I2C1 Master Events Interrupt Enable bit
1 = Interrupt request is enabled
0 = Interrupt request is not enabled

bit 0 **SI2C1IE:** I2C1 Slave Events Interrupt Enable bit
1 = Interrupt request is enabled
0 = Interrupt request is not enabled

Note 1: This bit is not implemented in dsPIC33FJ06GS101A/102A devices.

© 2011-2012 Microchip Technology Inc.

REGISTER 7-14: IEC3: INTERRUPT ENABLE CONTROL REGISTER 3

U-0	U-0	U-0	U-0	U-0	U-0	R/W-0	U-0
—	—	—	—	—	—	PSEMIE	—
bit 15							bit 8

U-0	U-0	U-0	U-0	U-0	U-0	U-0	U-0
—	—	—	—	—	—	—	—
bit 7							bit 0

Legend:			
R = Readable bit	W = Writable bit	U = Unimplemented bit, read as ‘0’	
-n = Value at POR	‘1’ = Bit is set	‘0’ = Bit is cleared	x = Bit is unknown

bit 15-10 **Unimplemented:** Read as ‘0’

bit 9 **PSEMIE:** PWM Special Event Match Interrupt Enable bit
1 = Interrupt request is enabled
0 = Interrupt request is not enabled

bit 8-0 **Unimplemented:** Read as ‘0’

REGISTER 7-15: IEC4: INTERRUPT ENABLE CONTROL REGISTER 4

U-0	U-0	U-0	U-0	U-0	U-0	U-0	U-0
—	—	—	—	—	—	—	—
bit 15							bit 8

U-0	U-0	U-0	U-0	U-0	U-0	R/W-0	U-0
—	—	—	—	—	—	U1EIE(1)	—
bit 7							bit 0

Legend:			
R = Readable bit	W = Writable bit	U = Unimplemented bit, read as ‘0’	
-n = Value at POR	‘1’ = Bit is set	‘0’ = Bit is cleared	x = Bit is unknown

bit 15-2 **Unimplemented:** Read as ‘0’

bit 1 **U1EIE:** UART1 Error Interrupt Enable bit(1)
1 = Interrupt request is enabled
0 = Interrupt request is not enabled

bit 0 **Unimplemented:** Read as ‘0’

Note 1: This bit is not implemented in the dsPIC33FJ06GS001 device.

REGISTER 7-16: IEC5: INTERRUPT ENABLE CONTROL REGISTER 5

R/W-0	R/W-0	U-0	U-0	U-0	U-0	U-0	U-0
PWM2IE[1]	PWM1IE	—	—	—	—	—	—
bit 15							bit 8

U-0	U-0	U-0	U-0	U-0	U-0	U-0	R/W-0
—	—	—	—	—	—	—	JTAGIE
bit 7							bit 0

Legend:			
R = Readable bit	W = Writable bit	U = Unimplemented bit, read as ‘0’	
-n = Value at POR	‘1’ = Bit is set	‘0’ = Bit is cleared	x = Bit is unknown

bit 15 **PWM2IE:** PWM2 Interrupt Enable bit[1]
1 = Interrupt request is enabled
0 = Interrupt request is not enabled

bit 14 **PWM1IE:** PWM1 Interrupt Enable bit
1 = Interrupt request is enabled
0 = Interrupt request is not enabled

bit 13-1 **Unimplemented:** Read as ‘0’

bit 0 **JTAGIE:** JTAG Interrupt Enable bit
1 = Interrupt request is enabled
0 = Interrupt request is not enabled

Note 1: This bit is not implemented in dsPIC33FJ06GS001/101A devices.

© 2011-2012 Microchip Technology Inc.

REGISTER 7-17: IEC6: INTERRUPT ENABLE CONTROL REGISTER 6

R/W-0	R/W-0	U-0	U-0	U-0	U-0	U-0	U-0
ADCP1IE	ADCP0IE	—	—	—	—	—	—
bit 15							bit 8

R/W-0	U-0	U-0	U-0	U-0	U-0	R/W-0	U-0
AC2IE(1)	—	—	—	—	—	PWM4IE(2)	—
bit 7							bit 0

Legend:			
R = Readable bit	W = Writable bit	U = Unimplemented bit, read as ‘0’	
-n = Value at POR	‘1’ = Bit is set	‘0’ = Bit is cleared	x = Bit is unknown

bit 15 **ADCP1IE:** ADC Pair 1 Conversion Done Interrupt Enable bit
1 = Interrupt request is enabled
0 = Interrupt request is not enabled

bit 14 **ADCP0IE:** ADC Pair 0 Conversion Done Interrupt Enable bit
1 = Interrupt request is enabled
0 = Interrupt request is not enabled

bit 13-8 **Unimplemented:** Read as ‘0

bit 7 **AC2IE:** Analog Comparator 2 Interrupt Enable bit(1)
1 = Interrupt request is enabled
0 = Interrupt request is not enabled

bit 6-2 **Unimplemented:** Read as ‘0’

bit 1 **PWM4IE:** PWM4 Interrupt Enable bit(2)
1 = Interrupt request is enabled
0 = Interrupt request is not enabled

bit 0 **Unimplemented:** Read as ‘0’

Note 1: This bit is not implemented in dsPIC33FJ06GS101A/102A devices.
2: This bit is not implemented in dsPIC33FJ06GS102A/202A devices.

REGISTER 7-18: IEC7: INTERRUPT ENABLE CONTROL REGISTER 7

U-0	U-0	U-0	U-0	U-0	U-0	U-0	U-0
—	—	—	—	—	—	—	—
bit 15							bit 8

U-0	U-0	U-0	R/W-0	U-0	U-0	R/W-0	R/W-0
—	—	—	ADCP6IE	—	—	ADCP3IE(1)	ADCP2IE(2)
bit 7							bit 0

Legend:			
R = Readable bit	W = Writable bit	U = Unimplemented bit, read as ‘0’	
-n = Value at POR	‘1’ = Bit is set	‘0’ = Bit is cleared	x = Bit is unknown

bit 15-5 **Unimplemented:** Read as ‘0’

bit 4 **ADCP6IE:** ADC Pair 6 Conversion Done Interrupt Enable bit
1 = Interrupt request is enabled
0 = Interrupt request is not enabled

bit 3-2 **Unimplemented:** Read as ‘0’

bit 1 **ADCP3IE:** ADC Pair 3 Conversion Done Interrupt Enable bit(1)
1 = Interrupt request is enabled
0 = Interrupt request is not enabled

bit 0 **ADCP2IE:** ADC Pair 2 Conversion Done Interrupt Enable bit(2)
1 = Interrupt request is enabled
0 = Interrupt request is not enabled

Note 1: This bit is not implemented in dsPIC33FJ06GS102A/202A devices.
2: This bit is not implemented in dsPIC33FJ06GS001/101A devices.

© 2011-2012 Microchip Technology Inc.

REGISTER 7-19: IPC0: INTERRUPT PRIORITY CONTROL REGISTER 0

U-0	R/W-1	R/W-0	R/W-0	U-0	R/W-1	R/W-0	R/W-0
—	T1IP<2:0>			—	OC1IP<2:0>(1)		
bit 15							bit 8

U-0	R/W-1	R/W-0	R/W-0	U-0	R/W-1	R/W-0	R/W-0
—	IC1IP<2:0>(2)			—	INT0IP<2:0>		
bit 7							bit 0

Legend:			
R = Readable bit	W = Writable bit	U = Unimplemented bit, read as ‘0’	
-n = Value at POR	‘1’ = Bit is set	‘0’ = Bit is cleared	x = Bit is unknown

bit 15 **Unimplemented:** Read as ‘0’

bit 14-12 **T1IP<2:0>:** Timer1 Interrupt Priority bits
111 = Interrupt is Priority 7 (highest priority interrupt)
•
•
•
001 = Interrupt is Priority 1
000 = Interrupt source is disabled

bit 11 **Unimplemented:** Read as ‘0’

bit 10-8 **OC1IP<2:0>:** Output Compare Channel 1 Interrupt Priority bits(1)
111 = Interrupt is Priority 7 (highest priority interrupt)
•
•
•
001 = Interrupt is Priority 1
000 = Interrupt source is disabled

bit 7 **Unimplemented:** Read as ‘0’

bit 6-4 **IC1IP<2:0>:** Input Capture Channel 1 Interrupt Priority bits(2)
111 = Interrupt is Priority 7 (highest priority interrupt)
•
•
•
001 = Interrupt is Priority 1
000 = Interrupt source is disabled

bit 3 **Unimplemented:** Read as ‘0’

bit 2-0 **INT0IP<2:0>:** External Interrupt 0 Priority bits
111 = Interrupt is Priority 7 (highest priority interrupt)
•
•
•
001 = Interrupt is Priority 1
000 = Interrupt source is disabled

Note 1: These bits are not implemented in the dsPIC33FJ06GS001 device.
2: These bits are not implemented in dsPIC33FJ06GS001/101A/102A devices.

REGISTER 7-20: IPC1: INTERRUPT PRIORITY CONTROL REGISTER 1

U-0	R/W-1	R/W-0	R/W-0	U-0	U-0	U-0	U-0
—	T2IP<2:0>			—	—	—	—
bit 15							bit 8

U-0	U-0	U-0	U-0	U-0	U-0	U-0	U-0
—	—	—	—	—	—	—	—
bit 7							bit 0

Legend:			
R = Readable bit	W = Writable bit	U = Unimplemented bit, read as ‘0’	
-n = Value at POR	‘1’ = Bit is set	‘0’ = Bit is cleared	x = Bit is unknown

bit 15 **Unimplemented:** Read as ‘0’

bit 14-12 **T2IP<2:0>:** Timer2 Interrupt Priority bits
111 = Interrupt is Priority 7 (highest priority interrupt)
•
•
•
001 = Interrupt is Priority 1
000 = Interrupt source is disabled

bit 11-0 **Unimplemented:** Read as ‘0’

© 2011-2012 Microchip Technology Inc.

REGISTER 7-21: IPC2: INTERRUPT PRIORITY CONTROL REGISTER 2

U-0	R/W-1	R/W-0	R/W-0	U-0	R/W-1	R/W-0	R/W-0
—	U1RXIP<2:0>(1)			—	SPI1IP<2:0>(1)		
bit 15							bit 8

U-0	R/W-1	R/W-0	R/W-0	U-0	U-0	U-0	U-0
—	SPI1EIP<2:0>(1)			—	—	—	—
bit 7							bit 0

Legend:			
R = Readable bit	W = Writable bit	U = Unimplemented bit, read as ‘0’	
-n = Value at POR	‘1’ = Bit is set	‘0’ = Bit is cleared	x = Bit is unknown

bit 15 **Unimplemented:** Read as ‘0’

bit 14-12 **U1RXIP<2:0>:** UART1 Receiver Interrupt Priority bits(1)
111 = Interrupt is Priority 7 (highest priority interrupt)
•
•
•
001 = Interrupt is Priority 1
000 = Interrupt source is disabled

bit 11 **Unimplemented:** Read as ‘0’

bit 10-8 **SPI1IP<2:0>:** SPI1 Event Interrupt Priority bits(1)
111 = Interrupt is Priority 7 (highest priority interrupt)
•
•
•
001 = Interrupt is Priority 1
000 = Interrupt source is disabled

bit 7 **Unimplemented:** Read as ‘0’

bit 6-4 **SPI1EIP<2:0>:** SPI1 Error Interrupt Priority bits(1)
111 = Interrupt is Priority 7 (highest priority interrupt)
•
•
•
001 = Interrupt is Priority 1
000 = Interrupt source is disabled

bit 3-0 **Unimplemented:** Read as ‘0’

Note 1: These bits are not implemented in the dsPIC33FJ06GS001 device.

REGISTER 7-22: IPC3: INTERRUPT PRIORITY CONTROL REGISTER 3

U-0	U-0	U-0	U-0	U-0	U-0	U-0	U-0
—	—	—	—	—	—	—	—
bit 15							bit 8

U-0	R/W-1	R/W-0	R/W-0	U-0	R/W-1	R/W-0	R/W-0
—	ADIP<2:0>			—	U1TXIP<2:0>(1)		
bit 7							bit 0

Legend:			
R = Readable bit	W = Writable bit	U = Unimplemented bit, read as ‘0’	
-n = Value at POR	‘1’ = Bit is set	‘0’ = Bit is cleared	x = Bit is unknown

bit 15-7 **Unimplemented:** Read as ‘0’

bit 6-4 **ADIP<2:0>:** ADC1 Conversion Complete Interrupt Priority bits
111 = Interrupt is Priority 7 (highest priority interrupt)
•
•
•
001 = Interrupt is Priority 1
000 = Interrupt source is disabled

bit 3 **Unimplemented:** Read as ‘0’

bit 2-0 **U1TXIP<2:0>:** UART1 Transmitter Interrupt Priority bits(1)
111 = Interrupt is Priority 7 (highest priority interrupt)
•
•
•
001 = Interrupt is Priority 1
000 = Interrupt source is disabled

Note 1: These bits are not implemented in the dsPIC33FJ06GS001 device.

© 2011-2012 Microchip Technology Inc.

REGISTER 7-23: IPC4: INTERRUPT PRIORITY CONTROL REGISTER 4

U-0	R/W-1	R/W-0	R/W-0	U-0	R/W-1	R/W-0	R/W-0
—	CNIP<2:0>			—	AC1IP<2:0>(1)		
bit 15							bit 8

U-0	R/W-1	R/W-0	R/W-0	U-0	R/W-1	R/W-0	R/W-0
—	MI2C1IP<2:0>			—	SI2C1IP<2:0>		
bit 7							bit 0

Legend:			
R = Readable bit	W = Writable bit	U = Unimplemented bit, read as ‘0’	
-n = Value at POR	‘1’ = Bit is set	‘0’ = Bit is cleared	x = Bit is unknown

bit 15 **Unimplemented:** Read as ‘0’

bit 14-12 **CNIP<2:0>:** Change Notification Interrupt Priority bits
111 = Interrupt is Priority 7 (highest priority interrupt)
•
•
•
001 = Interrupt is Priority 1
000 = Interrupt source is disabled

bit 11 **Unimplemented:** Read as ‘0’

bit 10-8 **AC1IP<2:0>:** Analog Comparator 1 Interrupt Priority bits(1)
111 = Interrupt is Priority 7 (highest priority interrupt)
•
•
•
001 = Interrupt is Priority 1
000 = Interrupt source is disabled

bit 7 **Unimplemented:** Read as ‘0’

bit 6-4 **MI2C1IP<2:0>:** I2C1 Master Events Interrupt Priority bits
111 = Interrupt is Priority 7 (highest priority interrupt)
•
•
•
001 = Interrupt is Priority 1
000 = Interrupt source is disabled

bit 3 **Unimplemented:** Read as ‘0’

bit 2-0 **SI2C1IP<2:0>:** I2C1 Slave Events Interrupt Priority bits
111 = Interrupt is Priority 7 (highest priority interrupt)
•
•
•
001 = Interrupt is Priority 1
000 = Interrupt source is disabled

Note 1: These bits are not implemented in dsPIC33FJ06GS101A/102A devices.

REGISTER 7-24: IPC5: INTERRUPT PRIORITY CONTROL REGISTER 5

U-0	U-0	U-0	U-0	U-0	U-0	U-0	U-0
—	—	—	—	—	—	—	—
bit 15							bit 8

U-0	U-0	U-0	U-0	U-0	R/W-1	R/W-0	R/W-0
—	—	—	—	—	INT1IP<2:0>		
bit 7							bit 0

Legend:			
R = Readable bit	W = Writable bit	U = Unimplemented bit, read as ‘0’	
-n = Value at POR	‘1’ = Bit is set	‘0’ = Bit is cleared	x = Bit is unknown

bit 15-3 **Unimplemented:** Read as ‘0’

bit 2-0 **INT1IP<2:0>:** External Interrupt 1 Priority bits
111 = Interrupt is Priority 7 (highest priority interrupt)
•
•
•
001 = Interrupt is Priority 1
000 = Interrupt source is disabled

REGISTER 7-25: IPC7: INTERRUPT PRIORITY CONTROL REGISTER 7

U-0	U-1	U-0	U-0	U-0	U-0	U-0	U-0
—	—	—	—	—	—	—	—
bit 15							bit 8

U-0	R/W-1	R/W-0	R/W-0	U-0	U-0	U-0	U-0
—	INT2IP<2:0>			—	—	—	—
bit 7							bit 0

Legend:			
R = Readable bit	W = Writable bit	U = Unimplemented bit, read as ‘0’	
-n = Value at POR	‘1’ = Bit is set	‘0’ = Bit is cleared	x = Bit is unknown

bit 15-7 **Unimplemented:** Read as ‘0’

bit 6-4 **INT2IP<2:0>:** External Interrupt 2 Priority bits
111 = Interrupt is Priority 7 (highest priority interrupt)
•
•
•
001 = Interrupt is Priority 1
000 = Interrupt source is disabled

bit 3-0 **Unimplemented:** Read as ‘0’

© 2011-2012 Microchip Technology Inc.

REGISTER 7-26: IPC14: INTERRUPT PRIORITY CONTROL REGISTER 14

U-0	U-0	U-0	U-0	U-0	U-0	U-0	U-0
—	—	—	—	—	—	—	—
bit 15							bit 8

U-0	R/W-1	R/W-0	R/W-0	U-0	U-0	U-0	U-0
—	PSEMIP<2:0>			—	—	—	—
bit 7							bit 0

Legend:			
R = Readable bit	W = Writable bit	U = Unimplemented bit, read as ‘0’	
-n = Value at POR	‘1’ = Bit is set	‘0’ = Bit is cleared	x = Bit is unknown

bit 15-7 **Unimplemented:** Read as ‘0’

bit 6-4 **PSEMIP<2:0>:** PWM Special Event Match Interrupt Priority bits
111 = Interrupt is Priority 7 (highest priority interrupt)
•
•
•
001 = Interrupt is Priority 1
000 = Interrupt source is disabled

bit 3-0 **Unimplemented:** Read as ‘0’

REGISTER 7-27: IPC16: INTERRUPT PRIORITY CONTROL REGISTER 16

U-0	U-0	U-0	U-0	U-0	U-0	U-0	U-0
—	—	—	—	—	—	—	—
bit 15							bit 8

U-0	R/W-1	R/W-0	R/W-0	U-0	U-0	U-0	U-0
—	U1EIP<2:0>(1)			—	—	—	—
bit 7							bit 0

Legend:			
R = Readable bit	W = Writable bit	U = Unimplemented bit, read as ‘0’	
-n = Value at POR	‘1’ = Bit is set	‘0’ = Bit is cleared	x = Bit is unknown

bit 15-7 **Unimplemented:** Read as ‘0’

bit 6-4 **U1EIP<2:0>:** UART1 Error Interrupt Priority bits(1)
111 = Interrupt is Priority 7 (highest priority interrupt)
•
•
•
001 = Interrupt is Priority 1
000 = Interrupt source is disabled

bit 3-0 **Unimplemented:** Read as ‘0’

Note 1: These bits are not implemented in the dsPIC33FJ06GS001 device.

REGISTER 7-28: IPC20: INTERRUPT PRIORITY CONTROL REGISTER 20

U-0	U-0	U-0	U-0	U-0	U-0	U-0	U-0
—	—	—	—	—	—	—	—
bit 15							bit 8

U-0	U-0	U-0	U-0	U-0	R/W-1	R/W-0	R/W-0
—	—	—	—	—	JTAGIP<2:0>		
bit 7							bit 0

Legend:			
R = Readable bit	W = Writable bit	U = Unimplemented bit, read as ‘0’	
-n = Value at POR	‘1’ = Bit is set	‘0’ = Bit is cleared	x = Bit is unknown

bit 15-3 **Unimplemented:** Read as ‘0’

bit 2-0 **JTAGIP<2:0>:** JTAG Interrupt Priority bits

111 = Interrupt is Priority 7 (highest priority interrupt)

•

•

•

001 = Interrupt is Priority 1

000 = Interrupt source is disabled

© 2011-2012 Microchip Technology Inc.

REGISTER 7-29: IPC23: INTERRUPT PRIORITY CONTROL REGISTER 23

U-0	R/W-1	R/W-0	R/W-0	U-0	R/W-1	R/W-0	R/W-0
—	PWM2IP[1]			—	PWM1IP<2:0>		
bit 15							bit 8

U-0	U-0	U-0	U-0	U-0	U-0	U-0	U-0
—	—	—	—	—	—	—	—
bit 7							bit 0

Legend:			
R = Readable bit	W = Writable bit	U = Unimplemented bit, read as ‘0’	
-n = Value at POR	‘1’ = Bit is set	‘0’ = Bit is cleared	x = Bit is unknown

bit 15 **Unimplemented:** Read as ‘0’

bit 14-12 **PWM2IP<2:0>:** PWM2 Interrupt Priority bits[1]
111 = Interrupt is Priority 7 (highest priority)
•
•
•
001 = Interrupt is Priority 1
000 = Interrupt source is disabled

bit 11 **Unimplemented:** Read as ‘0’

bit 10-8 **PWM1IP<2:0>:** PWM1 Interrupt Priority bits
111 = Interrupt is Priority 7 (highest priority)
•
•
•
001 = Interrupt is Priority 1
000 = Interrupt source is disabled

bit 7-0 **Unimplemented:** Read as ‘0’

Note 1: These bits are not implemented in dsPIC33FJ06GS001/101A devices.

REGISTER 7-30: IPC24: INTERRUPT PRIORITY CONTROL REGISTER 24

U-0	U-0	U-0	U-0	U-0	U-0	U-0	U-0
—	—	—	—	—	—	—	—
bit 15							bit 8

U-0	R/W-1	R/W-0	R/W-0	U-0	U-0	U-0	U-0
—	PWM4IP(1)			—	—	—	—
bit 7							bit 0

Legend:			
R = Readable bit	W = Writable bit	U = Unimplemented bit, read as ‘0’	
-n = Value at POR	‘1’ = Bit is set	‘0’ = Bit is cleared	x = Bit is unknown

bit 15-7 **Unimplemented:** Read as ‘0’

bit 6-4 **PWM4IP<2:0>:** PWM4 Interrupt Priority bits(1)

111 = Interrupt is Priority 7 (highest priority)

•

•

•

001 = Interrupt is Priority 1

000 = Interrupt source is disabled

bit 3-0 **Unimplemented:** Read as ‘0’

Note 1: These bits are not implemented in dsPIC33FJ06GS102A/202A devices.

© 2011-2012 Microchip Technology Inc.

REGISTER 7-31: IPC25: INTERRUPT PRIORITY CONTROL REGISTER 25

U-0	R/W-1	R/W-0	R/W-0	U-0	U-0	U-0	U-0
—	AC2IP<2:0>(1)			—	—	—	—
bit 15							bit 8

U-0	U-0	U-0	U-0	U-0	U-0	U-0	U-0
—	—	—	—	—	—	—	—
bit 7							bit 0

Legend:			
R = Readable bit	W = Writable bit	U = Unimplemented bit, read as ‘0’	
-n = Value at POR	‘1’ = Bit is set	‘0’ = Bit is cleared	x = Bit is unknown

bit 15 **Unimplemented:** Read as ‘0’

bit 14-12 **AC2IP<2:0>:** Analog Comparator 2 Interrupt Priority bits(1)

111 = Interrupt is Priority 7 (highest priority)

•

•

•

001 = Interrupt is Priority 1

000 = Interrupt source is disabled

bit 11-0 **Unimplemented:** Read as ‘0’

Note 1: These bits are not implemented in dsPIC33FJ06GS101A/102A devices.

REGISTER 7-32: IPC27: INTERRUPT PRIORITY CONTROL REGISTER 27

U-0	R/W-1	R/W-0	R/W-0	U-0	R/W-1	R/W-0	R/W-0
—	ADCP1IP<2:0>			—	ADCP0IP<2:0>		
bit 15							bit 8

U-0	U-0	U-0	U-0	U-0	U-0	U-0	U-0
—	—	—	—	—	—	—	—
bit 7							bit 0

Legend:			
R = Readable bit	W = Writable bit	U = Unimplemented bit, read as ‘0’	
-n = Value at POR	‘1’ = Bit is set	‘0’ = Bit is cleared	x = Bit is unknown

bit 15 **Unimplemented:** Read as ‘0’

bit 14-12 **ADCP1IP<2:0>:** ADC Pair 1 Conversion Done Interrupt Priority bits
111 = Interrupt is Priority 7 (highest priority interrupt)
•
•
•
001 = Interrupt is Priority 1
000 = Interrupt source is disabled

bit 11 **Unimplemented:** Read as ‘0’

bit 10-8 **ADCP0IP<2:0>:** ADC Pair 0 Conversion Done Interrupt Priority bits
111 = Interrupt is Priority 7 (highest priority interrupt)
•
•
•
001 = Interrupt is Priority 1
000 = Interrupt source is disabled

bit 7-0 **Unimplemented:** Read as ‘0’

© 2011-2012 Microchip Technology Inc.

REGISTER 7-33: IPC28: INTERRUPT PRIORITY CONTROL REGISTER 28

U-0	U-0	U-0	U-0	U-0	U-0	U-0	U-0
—	—	—	—	—	—	—	—
bit 15							bit 8

U-0	R/W-1	R/W-0	R/W-0	U-0	R/W-1	R/W-0	R/W-0
—	ADCP3IP<2:0>(1)			—	ADCP2IP<2:0>(2)		
bit 7							bit 0

Legend:			
R = Readable bit	W = Writable bit	U = Unimplemented bit, read as ‘0’	
-n = Value at POR	‘1’ = Bit is set	‘0’ = Bit is cleared	x = Bit is unknown

bit 15-7 **Unimplemented:** Read as ‘0’

bit 6-4 **ADCP3IP<2:0>:** ADC Pair 3 Conversion Done Interrupt Priority bits(1)
111 = Interrupt is Priority 7 (highest priority interrupt)
•
•
•
001 = Interrupt is Priority 1
000 = Interrupt source is disabled

bit 3 **Unimplemented:** Read as ‘0’

bit 2-0 **ADCP2IP<2:0>:** ADC Pair 2 Conversion Done Interrupt Priority bits(2)
111 = Interrupt is Priority 7 (highest priority interrupt)
•
•
•
001 = Interrupt is Priority 1
000 = Interrupt source is disabled

Note 1: These bits are not implemented in dsPIC33FJ06GS102A/202A devices.
2: These bits are not implemented in dsPIC33FJ06GS001/101A devices.

REGISTER 7-34: IPC29: INTERRUPT PRIORITY CONTROL REGISTER 29

U-0	U-0	U-0	U-0	U-0	U-0	U-0	U-0
—	—	—	—	—	—	—	—
bit 15							bit 8

U-0	U-0	U-0	U-0	U-0	R/W-1	R/W-0	R/W-0
—	—	—	—	—	ADCP6IP<2:0>		
bit 7							bit 0

Legend:			
R = Readable bit	W = Writable bit	U = Unimplemented bit, read as ‘0’	
-n = Value at POR	‘1’ = Bit is set	‘0’ = Bit is cleared	x = Bit is unknown

bit 15-3 **Unimplemented:** Read as ‘0’

bit 2-0 **ADCP6IP<2:0>:** ADC Pair 6 Conversion Done Interrupt Priority bits

111 = Interrupt is Priority 7 (highest priority interrupt)
•
•
•
001 = Interrupt is Priority 1
000 = Interrupt source is disabled

© 2011-2012 Microchip Technology Inc.

REGISTER 7-35: INTTREG: INTERRUPT CONTROL AND STATUS REGISTER

U-0	U-0	U-0	U-0	R-0	R-0	R-0	R-0
—	—	—	—	ILR<3:0>			
bit 15							bit 8

U-0	R-0	R-0	R-0	R-0	R-0	R-0	R-0
—	VECNUM<6:0>						
bit 7							bit 0

Legend:			
R = Readable bit	W = Writable bit	U = Unimplemented bit, read as ‘0’	
-n = Value at POR	‘1’ = Bit is set	‘0’ = Bit is cleared	x = Bit is unknown

bit 15-12 **Unimplemented:** Read as ‘0’

bit 11-8 **ILR<3:0>:** New CPU Interrupt Priority Level bits
1111 = CPU Interrupt Priority Level is 15
•
•
•
0001 = CPU Interrupt Priority Level is 1
0000 = CPU Interrupt Priority Level is 0

bit 7 **Unimplemented:** Read as ‘0’

bit 6-0 **VECNUM<6:0>:** Vector Number of Pending Interrupt bits
0111111 = Interrupt vector pending is Number 135
•
•
•
0000001 = Interrupt vector pending is Number 9
0000000 = Interrupt vector pending is Number 8

7.4 Interrupt Setup Procedures

7.4.1 INITIALIZATION

Complete the following steps to configure an interrupt source at initialization:

1. Set the NSTDIS bit (INTCON1<15>) if nested interrupts are not desired.
2. Select the user-assigned priority level for the interrupt source by writing the control bits in the appropriate IPCx register. The priority level will depend on the specific application and type of interrupt source. If multiple priority levels are not desired, the IPCx register control bits for all enabled interrupt sources can be programmed to the same non-zero value.

Note:	At a device Reset, the IPCx registers are initialized such that all user interrupt sources are assigned to Priority Level 4.

3. Clear the interrupt flag status bit associated with the peripheral in the associated IFSx register.
4. Enable the interrupt source by setting the interrupt enable control bit associated with the source in the appropriate IECx register.

7.4.2 INTERRUPT SERVICE ROUTINE

The method used to declare an ISR and initialize the IVT with the correct vector address depends on the programming language (C or assembler) and the language development toolsuite used to develop the application.

In general, the user application must clear the interrupt flag in the appropriate IFSx register for the source of the interrupt that the ISR handles; otherwise, the program will re-enter the ISR immediately after exiting the routine. If the ISR is coded in assembly language, it must be terminated using a `RETFIE` instruction to unstack the saved PC value, SRL value and the old CPU priority level.

7.4.3 TRAP SERVICE ROUTINE

A Trap Service Routine (TSR) is coded like an ISR, except that the appropriate trap status flag in the INTCON1 register must be cleared to avoid re-entry into the TSR.

7.4.4 INTERRUPT DISABLE

The following steps outline the procedure to disable all user interrupts:

1. Push the current SR value onto the software stack using the `PUSH` instruction.
2. Force the CPU to Priority Level 7 by inclusive ORing the value, 0xE0 with SRL.

To enable user interrupts, the `POP` instruction can be used to restore the previous SR value.

Note:	Only user interrupts with a priority level of 7 or lower can be disabled. Trap sources (Level 8-Level 15) cannot be disabled.

The `DISI` instruction provides a convenient way to disable interrupts of Priority Levels 1-6 for a fixed period of time. Level 7 interrupt sources are not disabled by the `DISI` instruction.

© 2011-2012 Microchip Technology Inc.

8.0 OSCILLATOR CONFIGURATION

Note 1: This data sheet summarizes the features of the dsPIC33FJ06GS001/101A/102A/202A and dsPIC33FJ09GS302 families of devices. It is not intended to be a comprehensive reference source. To complement the information in this data sheet, refer to **Section 42. "Oscillator (Part IV)"** (DS70307) in the *"dsPIC33F/PIC24H Family Reference Manual"*, which is available from the Microchip web site (www.microchip.com).

2: Some registers and associated bits described in this section may not be available on all devices. Refer to **Section 4.0 "Memory Organization"** in this data sheet for device-specific register and bit information.

The oscillator system provides:

- External and internal oscillator options as clock sources
- An on-chip Phase Lock Loop (PLL) to scale the internal operating frequency to the required system clock frequency
- An internal FRC oscillator that can also be used with the PLL, thereby allowing full-speed operation without any external clock generation hardware
- Clock switching between various clock sources
- Programmable clock postscaler for system power savings
- A Fail-Safe Clock Monitor (FSCM) that detects clock failure and takes fail-safe measures
- An Oscillator Control register (OSCCON)
- Nonvolatile Configuration bits for main oscillator selection
- An auxiliary PLL for ADC and PWM

A simplified diagram of the oscillator system is shown in Figure 8-1.

FIGURE 8-1: OSCILLATOR SYSTEM DIAGRAM

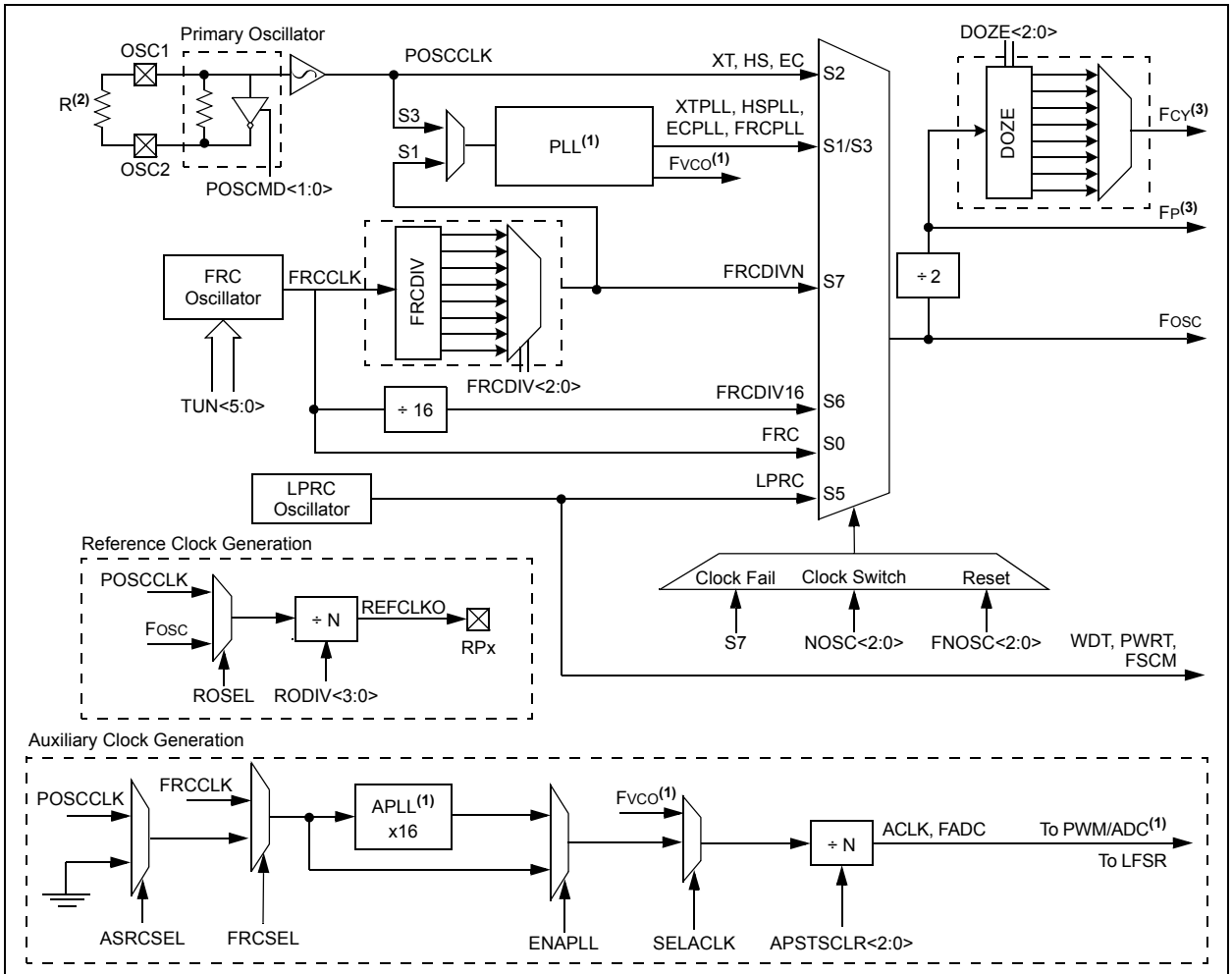

Note 1: See **Section 8.1.3 "PLL Configuration"** and **Section 8.2 "Auxiliary Clock Generation"** for configuration restrictions.

2: If the oscillator is used with XT or HS modes, an external parallel resistor with the value of 1 MΩ must be connected.

3: The term, FP, refers to the clock source for all the peripherals, while FCY refers to the clock source for the CPU. Throughout this document, FP and FCY are used interchangeably, except in the case of Doze mode. FP and FCY will be different when Doze mode is used in any ratio other than 1:1, which is the default.

8.1 CPU Clocking System

The devices provide six system clock options:

- Fast RC (FRC) Oscillator
- FRC Oscillator with PLL
- Primary (XT, HS or EC) Oscillator
- Primary Oscillator with PLL
- Low-Power RC (LPRC) Oscillator
- FRC Oscillator with Postscaler

8.1.1 SYSTEM CLOCK SOURCES

The Fast RC (FRC) internal oscillator runs at a nominal frequency of 7.37 MHz. User software can tune the FRC frequency. User software can optionally specify a factor (ranging from 1:2 to 1:256) by which the FRC clock frequency is divided. This factor is selected using the FRCDIV<2:0> (CLKDIV<10:8>) bits.

The primary oscillator can use one of the following as its clock source:

- XT (Crystal): Crystals and ceramic resonators in the range of 3 MHz to 10 MHz. The crystal is connected to the OSC1 and OSC2 pins.
- HS (High-Speed Crystal): Crystals in the range of 10 MHz to 32 MHz. The crystal is connected to the OSC1 and OSC2 pins.
- EC (External Clock): The external clock signal is directly applied to the OSC1 pin.

The LPRC internal oscIllator runs at a nominal frequency of 32.768 kHz. It is also used as a reference clock by the Watchdog Timer (WDT) and Fail-Safe Clock Monitor (FSCM).

The clock signals generated by the FRC and primary oscillators can be optionally applied to an on-chip Phase Lock Loop (PLL) to provide a wide range of output frequencies for device operation. PLL configuration is described in **Section 8.1.3 "PLL Configuration"**.

The FRC frequency depends on the FRC accuracy (see Table 25-20) and the value of the FRC Oscillator Tuning register (see Register 8-4).

8.1.2 SYSTEM CLOCK SELECTION

The oscillator source used at a device Power-on Reset event is selected using Configuration bit settings. The Oscillator Configuration bit settings are located in the Configuration registers in the program memory. (Refer to **Section 22.1 "Configuration Bits"** for further details.) The initial Oscillator Selection Configuration bits, FNOSC<2:0> (FOSCSEL<2:0>), and the Primary Oscillator Mode Select Configuration bits, POSCMD<1:0> (FOSC<1:0>), select the oscillator source that is used at a Power-on Reset. The FRC primary oscillator is the default (unprogrammed) selection.

The Configuration bits allow users to choose among 12 different clock modes, shown in Table 8-1.

The output of the oscillator (or the output of the PLL if a PLL mode has been selected), F_{OSC}, is divided by 2 to generate the device instruction clock (F_{CY}) and the peripheral clock time base (F_P). F_{CY} defines the operating speed of the device and speeds up to 40 MHz are supported by the device architecture.

Instruction execution speed or device operating frequency, F_{CY}, is given by Equation 8-1.

EQUATION 8-1: DEVICE OPERATING FREQUENCY

$$F_{CY} = F_{OSC}/2$$

TABLE 8-1: CONFIGURATION BIT VALUES FOR CLOCK SELECTION

Oscillator Mode	Oscillator Source	POSCMD<1:0>	FNOSC<2:0>	See Note
Fast RC Oscillator with Divide-by-N (FRCDIVN)	Internal	xx	111	1, 2
Fast RC Oscillator with Divide-by-16 (FRCDIV16)	Internal	xx	110	1
Low-Power RC Oscillator (LPRC)	Internal	xx	101	1
Reserved	Reserved	xx	100	—
Primary Oscillator (HS) with PLL (HSPLL)	Primary	10	011	—
Primary Oscillator (XT) with PLL (XTPLL)	Primary	01	011	—
Primary Oscillator (EC) with PLL (ECPLL)	Primary	00	011	1
Primary Oscillator (HS)	Primary	10	010	—
Primary Oscillator (XT)	Primary	01	010	—
Primary Oscillator (EC)	Primary	00	010	1
Fast RC Oscillator with PLL (FRCPLL)	Internal	xx	001	1
Fast RC Oscillator (FRC)	Internal	xx	000	1

Note 1: OSC2 pin function is determined by the OSCIOFNC Configuration bit.

2: This is the default oscillator mode for an unprogrammed (erased) device.

© 2011-2012 Microchip Technology Inc.

8.1.3 PLL CONFIGURATION

The primary oscillator and internal FRC oscillator can optionally use an on-chip PLL to obtain higher speeds of operation. The PLL provides significant flexibility in selecting the device operating speed. A block diagram of the PLL is shown in Figure 8-2.

The output of the primary oscillator or FRC, denoted as 'FIN', is divided down by a prescale factor (N1) of 2, 3, ... or 33 before being provided to the PLL's Voltage Controlled Oscillator (VCO). The input to the VCO must be selected in the range of 0.8 MHz to 8 MHz. The prescale factor, 'N1', is selected using the PLLPRE<4:0> bits (CLKDIV<4:0>).

The PLL Feedback Divisor, selected using the PLLDIV<8:0> bits (PLLFBD<8:0>), provides a factor, 'M', by which the input to the VCO is multiplied. This factor must be selected such that the resulting VCO output frequency is in the range of 100 MHz to 200 MHz.

The VCO output is further divided by a postscale factor, 'N2'. This factor is selected using the PLLPOST<1:0> bits (CLKDIV<7:6>). 'N2' can be either 2, 4, or 8, and must be selected such that the PLL output frequency (FOSC) is in the range of 12.5 MHz to 80 MHz, which generates device operating speeds of 6.25-40 MIPS.

For a primary oscillator or FRC oscillator, output 'FIN', the PLL output 'FOSC', is given by Equation 8-2.

EQUATION 8-2: FOSC CALCULATION

$$F_{OSC} = F_{IN} * \left(\frac{M}{N1 * N2}\right)$$

For example, suppose a 10 MHz crystal is being used with the selected oscillator mode of XT with PLL (see Equation 8-3).

- If PLLPRE<4:0> = 0, then N1 = 2. This yields a VCO input of 10/2 = 5 MHz, which is within the acceptable range of 0.8-8 MHz.
- If PLLDIV<8:0> = 0x1E, then M = 32. This yields a VCO output of 5 x 32 = 160 MHz, which is within the 100-200 MHz ranged needed.
- If PLLPOST<1:0> = 00, then N2 = 2. This provides a FOSC of 160/2 = 80 MHz. The resultant device operating speed is 80/2 = 40 MIPS.

EQUATION 8-3: XT WITH PLL MODE EXAMPLE

$$F_{CY} = \frac{F_{OSC}}{2} = \frac{1}{2}\left(\frac{10000000 * 32}{2 * 2}\right) = 40\ MIPS$$

8.2 Auxiliary Clock Generation

The auxiliary clock generation is used for a peripherals that need to operate at a frequency unrelated to the system clock, such as a PWM or ADC.

The primary oscillator and internal FRC oscillator sources can be used with an auxiliary PLL to obtain the auxiliary clock. The auxiliary PLL has a fixed 16x multiplication factor.

The auxiliary clock has the following configuration restrictions:

- For proper PWM operation, auxiliary clock generation must be configured for 120 MHz (see Parameter OS56 in Table 25-18 in **Section 25.0 "Electrical Characteristics"**). If a slower frequency is desired, the PWM Input Clock Prescaler (Divider) Select bits (PCLKDIV<2:0>) should be used.
- To achieve 1.04 ns PWM resolution, the auxiliary clock must use the 16x auxiliary PLL (APLL). All other clock sources will have a minimum PWM resolution of 8 ns.
- If the primary PLL is used as a source for the auxiliary clock, the primary PLL should be configured up to a maximum operation of 30 MIPS or less

8.3 Reference Clock Generation

The reference clock output logic provides the user with the ability to output a clock signal based on the system clock or the crystal oscillator on a device pin. The user application can specify a wide range of clock scaling prior to outputting the reference clock.

FIGURE 8-2: dsPIC33FJ06GS001/101A/102A/202A and dsPIC33FJ09GS302 PLL BLOCK DIAGRAM

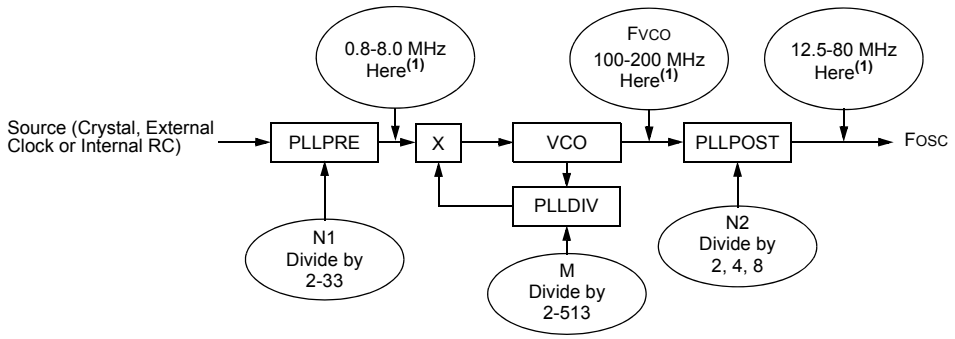

Note 1: This frequency range must be satisfied at all times.

8.4 Oscillator Control Registers

REGISTER 8-1: OSCCON: OSCILLATOR CONTROL REGISTER(1,3)

U-0	R-0	R-0	R-0	U-0	R/W-y	R/W-y	R/W-y
—	COSC<2:0>			—	NOSC<2:0>(2)		
bit 15							bit 8

R/W-0	R/W-0	R-0	U-0	R/C-0	U-0	U-0	R/W-0
CLKLOCK	IOLOCK	LOCK	—	CF	—	—	OSWEN
bit 7							bit 0

Legend:	y = Value set from Configuration bits on POR		
R = Readable bit	W = Writable bit	U = Unimplemented bit, read as ‘0’	
-n = Value at POR	‘1’ = Bit is set	‘0’ = Bit is cleared	x = Bit is unknown

bit 15 **Unimplemented:** Read as ‘0’

bit 14-12 **COSC<2:0>:** Current Oscillator Selection bits (read-only)
111 = Fast RC Oscillator (FRC) with divide-by-n
110 = Fast RC Oscillator (FRC) with divide-by-16
101 = Low-Power RC Oscillator (LPRC)
100 = Reserved
011 = Primary Oscillator (XT, HS, EC) with PLL
010 = Primary Oscillator (XT, HS, EC)
001 = Fast RC Oscillator (FRC) with PLL
000 = Fast RC Oscillator (FRC)

bit 11 **Unimplemented:** Read as ‘0’

bit 10-8 **NOSC<2:0>:** New Oscillator Selection bits(2)
111 = Fast RC Oscillator (FRC) with divide-by-n
110 = Fast RC Oscillator (FRC) with divide-by-16
101 = Low-Power RC Oscillator (LPRC)
100 = Reserved
011 = Primary Oscillator (XT, HS, EC) with PLL
010 = Primary Oscillator (XT, HS, EC)
001 = Fast RC Oscillator (FRC) with PLL
000 = Fast RC Oscillator (FRC)

bit 7 **CLKLOCK:** Clock Lock Enable bit
If clock switching is enabled and FSCM is disabled, FCKSM<1:0> (FOSC<7:6>) bits = 0b01):
1 = Clock switching is disabled, system clock source is locked
0 = Clock switching is enabled, system clock source can be modified by clock switching

bit 6 **IOLOCK:** Peripheral Pin Select Lock bit
1 = Peripherial Pin Select is locked, write to Peripheral Pin Select registers is not allowed
0 = Peripherial Pin Select is not locked, write to Peripheral Pin Select registers is allowed

bit 5 **LOCK:** PLL Lock Status bit (read-only)
1 = Indicates that PLL is in lock or PLL start-up timer is satisfied
0 = Indicates that PLL is out of lock, start-up timer is in progress or PLL is disabled

Note 1: Writes to this register require an unlock sequence. Refer to **Section 42. “Oscillator (Part IV)”** (DS70307) in the *“dsPIC33F/PIC24H Family Reference Manual”* for details.

2: Direct clock switches between any Primary Oscillator mode with PLL and FRCPLL mode are not permitted. This applies to clock switches in either direction. In these instances, the application must switch to FRC mode as a transition clock source between the two PLL modes.

3: This register is reset only on a Power-on Reset (POR).

© 2011-2012 Microchip Technology Inc.

REGISTER 8-1: OSCCON: OSCILLATOR CONTROL REGISTER(1,3) (CONTINUED)

bit 4	**Unimplemented:** Read as '0'
bit 3	**CF:** Clock Fail Detect bit (read/clear by application) 1 = FSCM has detected clock failure 0 = FSCM has not detected clock failure
bit 2-1	**Unimplemented:** Read as '0'
bit 0	**OSWEN:** Oscillator Switch Enable bit 1 = Request oscillator switch to selection specified by NOSC<2:0> bits 0 = Oscillator switch is complete

Note 1: Writes to this register require an unlock sequence. Refer to **Section 42. "Oscillator (Part IV)"** (DS70307) in the *"dsPIC33F/PIC24H Family Reference Manual"* for details.

2: Direct clock switches between any Primary Oscillator mode with PLL and FRCPLL mode are not permitted. This applies to clock switches in either direction. In these instances, the application must switch to FRC mode as a transition clock source between the two PLL modes.

3: This register is reset only on a Power-on Reset (POR).

REGISTER 8-2: CLKDIV: CLOCK DIVISOR REGISTER(2)

R/W-0	R/W-0	R/W-1	R/W-1	R/W-0	R/W-0	R/W-0	R/W-0
ROI	DOZE<2:0>			DOZEN(1)	FRCDIV<2:0>		
bit 15							bit 8

R/W-0	R/W-1	U-0	R/W-0	R/W-0	R/W-0	R/W-0	R/W-0
PLLPOST<1:0>		—	PLLPRE<4:0>				
bit 7							bit 0

Legend:			
R = Readable bit	W = Writable bit	U = Unimplemented bit, read as ‘0’	
-n = Value at POR	‘1’ = Bit is set	‘0’ = Bit is cleared	x = Bit is unknown

bit 15 **ROI:** Recover on Interrupt bit
1 = Interrupts will clear the DOZEN bit and the processor clock/peripheral clock ratio is set to 1:1
0 = Interrupts have no effect on the DOZEN bit

bit 14-12 **DOZE<2:0>:** Processor Clock Reduction Select bits
111 = FCY/128
110 = FCY/64
101 = FCY/32
100 = FCY/16
011 = FCY/8 (default)
010 = FCY/4
001 = FCY/2
000 = FCY/1

bit 11 **DOZEN:** Doze Mode Enable bit(1)
1 = DOZE<2:0> field specifies the ratio between the peripheral clocks and the processor clocks
0 = Processor clock/peripheral clock ratio is forced to 1:1

bit 10-8 **FRCDIV<2:0>:** Internal Fast RC Oscillator Postscaler bits
111 = FRC divide-by-256
110 = FRC divide-by-64
101 = FRC divide-by-32
100 = FRC divide-by-16
011 = FRC divide-by-8
010 = FRC divide-by-4
001 = FRC divide-by-2
000 = FRC divide-by-1 (default)

bit 7-6 **PLLPOST<1:0>:** PLL VCO Output Divider Select bits (also denoted as ‘N2’, PLL postscaler)
11 = Output/8
10 = Reserved
01 = Output/4 (default)
00 = Output/2

bit 5 **Unimplemented:** Read as ‘0’

bit 4-0 **PLLPRE<4:0>:** PLL Phase Detector Input Divider bits (also denoted as ‘N1’, PLL prescaler)
11111 = Input/33
•
•
•
00001 = Input/3
00000 = Input/2 (default)

Note 1: This bit is cleared when the ROI bit is set and an interrupt occurs.
2: This register is reset only on a Power-on Reset (POR).

© 2011-2012 Microchip Technology Inc.

REGISTER 8-3: PLLFBD: PLL FEEDBACK DIVISOR REGISTER(1)

U-0	U-0	U-0	U-0	U-0	U-0	U-0	R/W-0
—	—	—	—	—	—	—	PLLDIV8
bit 15							bit 8

R/W-0	R/W-0	R/W-1	R/W-1	R/W-0	R/W-0	R/W-0	R/W-0
PLLDIV<7:0>							
bit 7							bit 0

Legend:			
R = Readable bit	W = Writable bit	U = Unimplemented bit, read as ‘0’	
-n = Value at POR	‘1’ = Bit is set	‘0’ = Bit is cleared	x = Bit is unknown

bit 15-9 **Unimplemented:** Read as ‘0’

bit 8-0 **PLLDIV<8:0>:** PLL Feedback Divisor bits (also denoted as ‘M’, PLL multiplier)

111111111 = 513
•
•
•
000110000 = 50 (default)
•
•
•
000000010 = 4
000000001 = 3
000000000 = 2

Note 1: This register is reset only on a Power-on Reset (POR).

REGISTER 8-4: OSCTUN: FRC OSCILLATOR TUNING REGISTER(2)

U-0	U-0	U-0	U-0	U-0	U-0	U-0	U-0
—	—	—	—	—	—	—	—
bit 15							bit 8

U-0	U-0	R/W-0	R/W-0	R/W-0	R/W-0	R/W-0	R/W-0
—	—	TUN<5:0>(1)					
bit 7							bit 0

Legend:			
R = Readable bit	W = Writable bit	U = Unimplemented bit, read as ‘0’	
-n = Value at POR	‘1’ = Bit is set	‘0’ = Bit is cleared	x = Bit is unknown

bit 15-6 **Unimplemented:** Read as ‘0’

bit 5-0 **TUN<5:0>:** FRC Oscillator Tuning bits(1)

011111 = Center frequency + 11.625% (8.23 MHz)
011110 = Center frequency + 11.25% (8.20 MHz)
•
•
•
000001 = Center frequency + 0.375% (7.40 MHz)
000000 = Center frequency (7.37 MHz nominal)
111111 = Center frequency – 0.375% (7.345 MHz)
•
•
•
100001 = Center frequency – 11.625% (6.52 MHz)
100000 = Center frequency – 12% (6.49 MHz)

Note 1: OSCTUN functionality has been provided to help customers compensate for temperature effects on the FRC frequency over a wide range of temperatures. The tuning step size is an approximation and is neither characterized nor tested.

2: This register is reset only on a Power-on Reset (POR).

© 2011-2012 Microchip Technology Inc.

REGISTER 8-5: ACLKCON: AUXILIARY CLOCK DIVISOR CONTROL REGISTER(1)

R/W-0	R-0	R/W-1	U-0	U-0	R/W-1	R/W-1	R/W-1
ENAPLL	APLLCK	SELACLK	—	—	APSTSCLR<2:0>(2)		
bit 15							bit 8

R/W-0	R/W-0	U-0	U-0	U-0	U-0	U-0	U-0
ASRCSEL	FRCSEL	—	—	—	—	—	—
bit 7							bit 0

Legend:			
R = Readable bit	W = Writable bit	U = Unimplemented bit, read as ‘0’	
-n = Value at POR	‘1’ = Bit is set	‘0’ = Bit is cleared	x = Bit is unknown

bit 15 **ENAPLL:** Auxiliary PLL Enable bit
1 = APLL is enabled
0 = APLL is disabled

bit 14 **APLLCK:** APLL Locked Status bit (read-only)
1 = Indicates that auxiliary PLL is in lock
0 = Indicates that auxiliary PLL is not in lock

bit 13 **SELACLK:** Select Auxiliary Clock Source for Auxiliary Clock Divider bit
1 = Auxiliary oscillators provides the source clock for auxiliary clock divider
0 = Primary PLL (FVCO) provides the source clock for auxiliary clock divider

bit 12-11 **Unimplemented:** Read as ‘0’

bit 10-8 **APSTSCLR<2:0>:** Auxiliary Clock Output Divider bits(2)
111 = Divided by 1
110 = Divided by 2
101 = Divided by 4
100 = Divided by 8
011 = Divided by 16
010 = Divided by 32
001 = Divided by 64
000 = Divided by 256

bit 7 **ASRCSEL:** Select Reference Clock Source for Auxiliary Clock bit
1 = Primary oscillator is the clock source
0 = No clock input is selected

bit 6 **FRCSEL:** Select Reference Clock Source for Auxiliary PLL bit
1 = Selects FRC clock for auxiliary PLL
0 = Input clock source is determined by ASRCSEL bit setting

bit 5-0 **Unimplemented:** Read as ‘0’

Note 1: This register is reset only on a Power-on Reset (POR).
2: The auxiliary clock postscaler must be configured to divide-by-1 (APSTSCLR<2:0> = 111) for proper operation of the PWM module.

REGISTER 8-6: REFOCON: REFERENCE OSCILLATOR CONTROL REGISTER

R/W-0	U-0	R/W-0	R/W-0	R/W-0	R/W-0	R/W-0	R/W-0
ROON	—	ROSSLP	ROSEL	RODIV<3:0>(1)			
bit 15							bit 8

U-0	U-0	U-0	U-0	U-0	U-0	U-0	U-0
—	—	—	—	—	—	—	—
bit 7							bit 0

Legend:			
R = Readable bit	W = Writable bit	U = Unimplemented bit, read as ‘0’	
-n = Value at POR	‘1’ = Bit is set	‘0’ = Bit is cleared	x = Bit is unknown

bit 15 **ROON:** Reference Oscillator Output Enable bit
1 = Reference oscillator output is enabled on REFCLK0 pin(2)
0 = Reference oscillator output is disabled

bit 14 **Unimplemented:** Read as ‘0’

bit 13 **ROSSLP:** Reference Oscillator Run in Sleep bit
1 = Reference oscillator output continues to run in Sleep
0 = Reference oscillator output is disabled in Sleep

bit 12 **ROSEL:** Reference Oscillator Source Select bit
1 = Oscillator crystal used as the reference clock
0 = System clock used as the reference clock

bit 11-8 **RODIV<3:0>:** Reference Oscillator Divider bits(1)
1111 = Reference clock divided by 32,768
1110 = Reference clock divided by 16,384
1101 = Reference clock divided by 8,192
1100 = Reference clock divided by 4,096
1011 = Reference clock divided by 2,048
1010 = Reference clock divided by 1,024
1001 = Reference clock divided by 512
1000 = Reference clock divided by 256
0111 = Reference clock divided by 128
0110 = Reference clock divided by 64
0101 = Reference clock divided by 32
0100 = Reference clock divided by 16
0011 = Reference clock divided by 8
0010 = Reference clock divided by 4
0001 = Reference clock divided by 2
0000 = Reference clock

bit 7-0 **Unimplemented:** Read as ‘0’

Note 1: The reference oscillator output must be disabled (ROON = 0) before writing to these bits.
2: This pin is remappable; refer to **Section 10.6 “Peripheral Pin Select (PPS)”** for more information.

© 2011-2012 Microchip Technology Inc.

REGISTER 8-7: LFSR: LINEAR FEEDBACK SHIFT REGISTER

U-0	R/W-0	R/W-0	R/W-0	R/W-0	R/W-0	R/W-0	R/W-0
—	LFSR<14:8>						
bit 15							bit 8

R/W-0	R/W-0	R/W-0	R/W-0	R/W-0	R/W-0	R/W-0	R/W-0
LFSR<7:0>							
bit 7							bit 0

Legend:			
R = Readable bit	W = Writable bit	U = Unimplemented bit, read as ‘0’	
-n = Value at POR	‘1’ = Bit is set	‘0’ = Bit is cleared	x = Bit is unknown

bit 15 **Unimplemented:** Read as ‘0’

bit 14-0 **LFSR<14:0>:** Pseudo Random FRC Trim Value bits

8.5 Clock Switching Operation

Applications are free to switch among any of the four clock sources (primary, LP, FRC and LPRC) under software control at any time. To limit the possible side effects of this flexibility, devices have a safeguard lock built into the switch process.

Note: Primary Oscillator mode has three different submodes (XT, HS and EC), which are determined by the POSCMD<1:0> Configuration bits. While an application can switch to and from Primary Oscillator mode in software, it cannot switch among the different primary submodes without reprogramming the device.

8.5.1 ENABLING CLOCK SWITCHING

To enable clock switching, the FCKSM1 Configuration bit in the FOSC Configuration register must be programmed to '0'. (Refer to **Section 22.1 "Configuration Bits"** for further details.) If the FCKSM1 Configuration bit is unprogrammed ('1'), the clock switching function and Fail-Safe Clock Monitor function are disabled. This is the default setting.

The NOSC<2:0> control bits (OSCCON<10:8>) do not control the clock selection when clock switching is disabled. However, the COSC<2:0> bits (OSCCON<14:12>) reflect the clock source selected by the FNOSC Configuration bits.

The OSWEN control bit (OSCCON<0>) has no effect when clock switching is disabled. It is held at '0' at all times.

8.5.2 OSCILLATOR SWITCHING SEQUENCE

To perform a clock switch, the following basic sequence is required:

1. If desired, read the COSC<2:0> bits to determine the current oscillator source.
2. Perform the unlock sequence to allow a write to the OSCCON register high byte.
3. Write the appropriate value to the NOSC<2:0> control bits for the new oscillator source.
4. Perform the unlock sequence to allow a write to the OSCCON register low byte.
5. Set the OSWEN bit (OSCCON<0>) to initiate the oscillator switch.

Once the basic sequence is completed, the system clock hardware responds automatically as follows:

1. The clock switching hardware compares the COSC<2:0> status bits with the new value of the NOSC<2:0> control bits. If they are the same, the clock switch is a redundant operation. In this case, the OSWEN bit is cleared automatically and the clock switch is aborted.
2. If a valid clock switch has been initiated, the LOCK (OSCCON<5>) and the CF (OSCCON<3>) status bits are cleared.
3. The new oscillator is turned on by the hardware if it is not currently running. If a crystal oscillator must be turned on, the hardware waits until the Oscillator Start-up Timer (OST) expires. If the new source is using the PLL, the hardware waits until a PLL lock is detected (LOCK = 1).
4. The hardware waits for 10 clock cycles from the new clock source and then performs the clock switch.
5. The hardware clears the OSWEN bit to indicate a successful clock transition. In addition, the NOSC<2:0> bit values are transferred to the COSC<2:0> status bits.
6. The old clock source is turned off at this time, with the exception of LPRC (if WDT or FSCM is enabled).

Note 1: The processor continues to execute code throughout the clock switching sequence. Timing-sensitive code should not be executed during this time.

2: Direct clock switches between any Primary Oscillator mode with PLL and FRCPLL mode are not permitted. This applies to clock switches in either direction. In these instances, the application must switch to FRC mode as a transition clock source between the two PLL modes.

3: Refer to **Section 42. "Oscillator (Part IV)"** (DS70307) in the *"dsPIC33F/PIC24H Family Reference Manual"* for details.

© 2011-2012 Microchip Technology Inc.

8.6 Fail-Safe Clock Monitor (FSCM)

The Fail-Safe Clock Monitor (FSCM) allows the device to continue to operate, even in the event of an oscillator failure. The FSCM function is enabled by programming. If the FSCM function is enabled, the LPRC internal oscillator runs at all times (except during Sleep mode) and is not subject to control by the Watchdog Timer.

In the event of an oscillator failure, the FSCM generates a clock failure trap event and switches the system clock over to the FRC oscillator. Then, the application program can either attempt to restart the oscillator or execute a controlled shutdown. The trap can be treated as a warm Reset by simply loading the Reset address into the oscillator fail trap vector.

If the PLL multiplier is used to scale the system clock, the internal FRC is also multiplied by the same factor on clock failure. Essentially, the device switches to FRC with PLL on a clock failure.

8.7 Pseudo-Random Generator

The pseudo-random generator is implemented with a 15-bit Linear Feedback Shift Register (LFSR), which is a shift register with a few exclusive OR gates. The shift register is clocked by the PWM clock and is a read-only register. The purpose of this feature is to provide the ability to randomly change the period or the active portion of the PWM.

A firmware routine can be used to read “n” random bits from the LFSR register and combine them, by either summing or performing another logical operation with the PWM period of the Duty Cycle registers. The result will be a PWM signal whose nominal period (or duty cycle) is the desired one, but whose effective value changes randomly. This capability will help in reducing the EMI/EMC emissions by spreading the power over a wider frequency range.

Figure 8-3 provides a block diagram of the LFSR.

FIGURE 8-3: LFSR BLOCK DIAGRAM

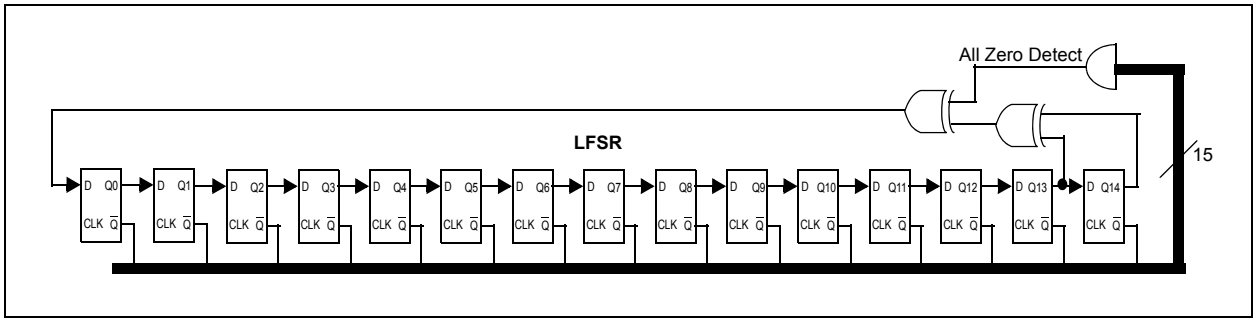

NOTES:

© 2011-2012 Microchip Technology Inc.

9.0 POWER-SAVING FEATURES

Note 1: This data sheet summarizes the features of the dsPIC33FJ06GS001/101A/102A/202A and dsPIC33FJ09GS302 families of devices. It is not intended to be a comprehensive reference source. To complement the information in this data sheet, refer to **Section 9. "Watchdog Timer (WDT) and Power-Saving Modes"** (DS70196) in the *"dsPIC33F/PIC24H Family Reference Manual"*, which is available from the Microchip web site (www.microchip.com).

2: Some registers and associated bits described in this section may not be available on all devices. Refer to **Section 4.0 "Memory Organization"** in this data sheet for device-specific register and bit information.

These devices provide the ability to manage power consumption by selectively managing clocking to the CPU and the peripherals. In general, a lower clock frequency and a reduction in the number of circuits being clocked constitutes lower consumed power. Devices can manage power consumption in four different ways:

- Clock Frequency
- Instruction-Based Sleep and Idle modes
- Software Controlled Doze mode
- Selective Peripheral Control in Software

Combinations of these methods can be used to selectively tailor an application's power consumption while still maintaining critical application features, such as timing-sensitive communications.

9.1 Clock Frequency and Clock Switching

These devices allow a wide range of clock frequencies to be selected under application control. If the system clock configuration is not locked, users can choose low-power or high-precision oscillators by simply changing the NOSC<2:0> bits (OSCCON<10:8>). The process of changing a system clock during operation, as well as limitations to the process, are discussed in more detail in **Section 8.0 "Oscillator Configuration"**.

9.2 Instruction-Based Power-Saving Modes

The devices have two special power-saving modes that are entered through the execution of a special `PWRSAV` instruction. Sleep mode stops clock operation and halts all code execution. Idle mode halts the CPU and code execution, but allows peripheral modules to continue operation. The assembler syntax of the `PWRSAV` instruction is shown in Example 9-1.

Note: `SLEEP_MODE` and `IDLE_MODE` are constants defined in the assembler include file for the selected device.

Sleep and Idle modes can be exited as a result of an enabled interrupt, WDT time-out or a device Reset. When the device exits these modes, it is said to wake-up.

9.2.1 SLEEP MODE

The following occur in Sleep mode:

- The system clock source is shut down. If an on-chip oscillator is used, it is turned off.
- The device current consumption is reduced to a minimum, provided that no I/O pin is sourcing current.
- The Fail-Safe Clock Monitor does not operate since the system clock source is disabled.
- The LPRC clock continues to run in Sleep mode if the WDT is enabled.
- The WDT, if enabled, is automatically cleared prior to entering Sleep mode.
- Some device features or peripherals may continue to operate. This includes items, such as the Input Change Notification (ICN) on the I/O ports or peripherals that use an external clock input.
- Any peripheral that requires the system clock source for its operation is disabled.

The device will wake-up from Sleep mode on any of these events:

- Any interrupt source that is individually enabled
- Any form of device Reset
- A WDT time-out

On wake-up from Sleep mode, the processor restarts with the same clock source that was active when Sleep mode was entered.

EXAMPLE 9-1: `PWRSAV` INSTRUCTION SYNTAX

```
PWRSAV  #SLEEP_MODE    ; Put the device into SLEEP mode
PWRSAV  #IDLE_MODE     ; Put the device into IDLE mode
```

9.2.2 IDLE MODE

The following occur in Idle mode:

- The CPU stops executing instructions.
- The WDT is automatically cleared.
- The system clock source remains active. By default, all peripheral modules continue to operate normally from the system clock source, but can also be selectively disabled (see **Section 9.4 "Peripheral Module Disable"**).
- If the WDT or FSCM is enabled, the LPRC also remains active.

The device will wake-up from Idle mode on any of these events:

- Any interrupt that is individually enabled
- Any device Reset
- A WDT time-out

On wake-up from Idle mode, the clock is reapplied to the CPU and instruction execution will begin (2-4 clock cycles later), starting with the instruction following the `PWRSAV` instruction, or the first instruction in the ISR.

9.2.3 INTERRUPTS COINCIDENT WITH POWER SAVE INSTRUCTIONS

Any interrupt that coincides with the execution of a `PWRSAV` instruction is held off until entry into Sleep or Idle mode has completed. The device then wakes up from Sleep or Idle mode.

9.3 Doze Mode

The preferred strategies for reducing power consumption are changing clock speed and invoking one of the power-saving modes. In some circumstances, this may not be practical. For example, it may be necessary for an application to maintain uninterrupted synchronous communication, even while it is doing nothing else. Reducing system clock speed can introduce communication errors, while using a power-saving mode can stop communications completely.

Doze mode is a simple and effective alternative method to reduce power consumption while the device is still executing code. In this mode, the system clock continues to operate from the same source and at the same speed. Peripheral modules continue to be clocked at the same speed, while the CPU clock speed is reduced. Synchronization between the two clock domains is maintained, allowing the peripherals to access the SFRs while the CPU executes code at a slower rate.

Doze mode is enabled by setting the DOZEN bit (CLKDIV<11>). The ratio between peripheral and core clock speed is determined by the DOZE<2:0> bits (CLKDIV<14:12>). There are eight possible configurations, from 1:1 to 1:128, with 1:1 being the default setting.

Programs can use Doze mode to selectively reduce power consumption in event-driven applications. This allows clock-sensitive functions, such as synchronous communications, to continue without interruption while the CPU Idles, waiting for something to invoke an interrupt routine. An automatic return to full-speed CPU operation on interrupts can be enabled by setting the ROI bit (CLKDIV<15>). By default, interrupt events have no effect on Doze mode operation.

9.4 Peripheral Module Disable

The Peripheral Module Disable (PMD) registers provide a method to disable a peripheral module by stopping all clock sources supplied to that module. When a peripheral is disabled using the appropriate PMD control bit, the peripheral is in a minimum power consumption state. The control and status registers associated with the peripheral are also disabled, so writes to those registers will have no effect and read values will be invalid.

A peripheral module is enabled only if both the associated bit in the PMD register is cleared and the peripheral is supported by the specific dsPIC® DSC variant. If the peripheral is present in the device, it is enabled in the PMD register by default.

Note:	If a PMD bit is set, the corresponding module is disabled after a delay of one instruction cycle. Similarly, if a PMD bit is cleared, the corresponding module is enabled after a delay of one instruction cycle (assuming the module control registers are already configured to enable module operation).

© 2011-2012 Microchip Technology Inc.

9.5 PMD Control Registers

REGISTER 9-1: PMD1: PERIPHERAL MODULE DISABLE CONTROL REGISTER 1

U-0	U-0	U-0	R/W-0	R/W-0	U-0	R/W-0	U-0
—	—	—	T2MD	T1MD	—	PWMMD(1)	—
bit 15							bit 8

R/W-0	U-0	R/W-0	U-0	R/W-0	U-0	U-0	R/W-0
I2C1MD	—	U1MD(2)	—	SPI1MD(2)	—	—	ADCMD
bit 7							bit 0

Legend:			
R = Readable bit	W = Writable bit	U = Unimplemented bit, read as ‘0’	
-n = Value at POR	‘1’ = Bit is set	‘0’ = Bit is cleared	x = Bit is unknown

bit 15-13 **Unimplemented:** Read as ‘0’

bit 12 **T2MD:** Timer2 Module Disable bit
1 = Timer2 module is disabled
0 = Timer2 module is enabled

bit 11 **T1MD:** Timer1 Module Disable bit
1 = Timer1 module is disabled
0 = Timer1 module is enabled

bit 10 **Unimplemented:** Read as ‘0’

bit 9 **PWMMD:** PWM Module Disable bit(1)
1 = PWM module is disabled
0 = PWM module is enabled

bit 8 **Unimplemented:** Read as ‘0’

bit 7 **I2C1MD:** I2C1 Module Disable bit
1 = I2C1 module is disabled
0 = I2C1 module is enabled

bit 6 **Unimplemented:** Read as ‘0’

bit 5 **U1MD:** UART1 Module Disable bit(2)
1 = UART1 module is disabled
0 = UART1 module is enabled

bit 4 **Unimplemented:** Read as ‘0’

bit 3 **SPI1MD:** SPI1 Module Disable bit(2)
1 = SPI1 module is disabled
0 = SPI1 module is enabled

bit 2-1 **Unimplemented:** Read as ‘0’

bit 0 **ADCMD:** ADC Module Disable bit
1 = ADC module is disabled
0 = ADC module is enabled

Note 1: Once the PWM module is re-enabled (PWMMD is set to ‘1’ and then set to ‘0’), all PWM registers must be re-initialized.

2: This bit is not implemented in the dsPIC33FJ06GS001 device.

REGISTER 9-2: PMD2: PERIPHERAL MODULE DISABLE CONTROL REGISTER 2

U-0	U-0	U-0	U-0	U-0	U-0	U-0	R/W-0
—	—	—	—	—	—	—	IC1MD(1)
bit 15							bit 8

U-0	U-0	U-0	U-0	U-0	U-0	U-0	R/W-0
—	—	—	—	—	—	—	OC1MD(2)
bit 7							bit 0

Legend:			
R = Readable bit	W = Writable bit	U = Unimplemented bit, read as ‘0’	
-n = Value at POR	‘1’ = Bit is set	‘0’ = Bit is cleared	x = Bit is unknown

bit 15-9 **Unimplemented:** Read as ‘0’

bit 8 **IC1MD:** Input Capture 1 Module Disable bit(1)
1 = Input Capture 1 module is disabled
0 = Input Capture 1 module is enabled

bit 7-1 **Unimplemented:** Read as ‘0’

bit 0 **OC1MD:** Output Compare 1 Module Disable bit(2)
1 = Output Compare 1 module is disabled
0 = Output Compare 1 module is enabled

Note 1: This bit is not implemented in dsPIC33FJ06GS001/101A/102A devices.
2: This bit is not implemented in the dsPIC33FJ06GS001 device.

© 2011-2012 Microchip Technology Inc.

REGISTER 9-3: PMD3: PERIPHERAL MODULE DISABLE CONTROL REGISTER 3

U-0	U-0	U-0	U-0	U-0	R/W-0	U-0	U-0
—	—	—	—	—	CMPMD(1)	—	—
bit 15							bit 8

U-0	U-0	U-0	U-0	U-0	U-0	U-0	U-0
—	—	—	—	—	—	—	—
bit 7							bit 0

Legend:			
R = Readable bit	W = Writable bit	U = Unimplemented bit, read as ‘0’	
-n = Value at POR	‘1’ = Bit is set	‘0’ = Bit is cleared	x = Bit is unknown

bit 15-11 **Unimplemented:** Read as ‘0’

bit 10 **CMPMD:** Analog Comparator Module Disable bit(1)
1 = Analog comparator module is disabled
0 = Analog comparator module is enabled

bit 9-0 **Unimplemented:** Read as ‘0’

Note 1: This bit is not implemented in dsPIC33FJ06GS101A/102A devices.

REGISTER 9-4: PMD4: PERIPHERAL MODULE DISABLE CONTROL REGISTER 4

U-0	U-0	U-0	U-0	U-0	U-0	U-0	U-0
—	—	—	—	—	—	—	—
bit 15							bit 8

U-0	U-0	U-0	U-0	R/W-0	U-0	U-0	U-0
—	—	—	—	REFOMD	—	—	—
bit 7							bit 0

Legend:			
R = Readable bit	W = Writable bit	U = Unimplemented bit, read as ‘0’	
-n = Value at POR	‘1’ = Bit is set	‘0’ = Bit is cleared	x = Bit is unknown

bit 15-4 **Unimplemented:** Read as ‘0’

bit 3 **REFOMD:** Reference Clock Generator Module Disable bit
1 = Reference clock generator module is disabled
0 = Reference clock generator module is enabled

bit 2-0 **Unimplemented:** Read as ‘0’

REGISTER 9-5: PMD6: PERIPHERAL MODULE DISABLE CONTROL REGISTER 6

U-0	U-0	U-0	U-0	R/W-0	U-0	R/W-0	R/W-0
—	—	—	—	PWM4MD(1)	—	PWM2MD(2)	PWM1MD
bit 15							bit 8

U-0	U-0	U-0	U-0	U-0	U-0	U-0	U-0
—	—	—	—	—	—	—	—
bit 7							bit 0

Legend:			
R = Readable bit	W = Writable bit	U = Unimplemented bit, read as ‘0’	
-n = Value at POR	‘1’ = Bit is set	‘0’ = Bit is cleared	x = Bit is unknown

bit 15-12 **Unimplemented:** Read as ‘0’

bit 11 **PWM4MD:** PWM Generator 4 Module Disable bit(1)
1 = PWM Generator 4 module is disabled
0 = PWM Generator 4 module is enabled

bit 10 **Unimplemented:** Read as ‘0’

bit 9 **PWM2MD:** PWM Generator 2 Module Disable bit(2)
1 = PWM Generator 2 module is disabled
0 = PWM Generator 2 module is enabled

bit 8 **PWM1MD:** PWM Generator 1 Module Disable bit
1 = PWM Generator 1 module is disabled
0 = PWM Generator 1 module is enabled

bit 7-0 **Unimplemented:** Read as ‘0’

Note 1: This bit is not implemented in dsPIC33FJ06GS102A/202A devices.
2: This bit is not implemented in dsPIC33FJ06GS001/101A devices.

© 2011-2012 Microchip Technology Inc.

REGISTER 9-6: PMD7: PERIPHERAL MODULE DISABLE CONTROL REGISTER 7

U-0	U-0	U-0	U-0	U-0	U-0	R/W-0	R/W-0
—	—	—	—	—	—	CMP2MD(1)	CMP1MD(1)
bit 15							bit 8

U-0	U-0	U-0	U-0	U-0	U-0	U-0	U-0
—	—	—	—	—	—	—	—
bit 7							bit 0

Legend:			
R = Readable bit	W = Writable bit	U = Unimplemented bit, read as ‘0’	
-n = Value at POR	‘1’ = Bit is set	‘0’ = Bit is cleared	x = Bit is unknown

bit 15-10 **Unimplemented:** Read as ‘0’

bit 9 **CMP2MD:** Analog Comparator 2 Module Disable bit(1)
1 = Analog Comparator 2 module is disabled
0 = Analog Comparator 2 module is enabled

bit 8 **CMP1MD:** Analog Comparator 1 Module Disable bit(1)
1 = Analog Comparator 1 module is disabled
0 = Analog Comparator 1 module is enabled

bit 7-0 **Unimplemented:** Read as ‘0’

Note 1: This bit is not implemented in dsPIC33FJ06GS101A/102A devices.

REGISTER 9-7: PMD8: PERIPHERAL MODULE DISABLE CONTROL REGISTER 8

U-0	U-0	U-0	U-0	U-0	U-0	U-0	U-0
—	—	—	—	—	—	—	—
bit 15							bit 8

U-0	U-0	U-0	U-0	U-0	U-0	R/W-0	U-0
—	—	—	—	—	—	CCSMD(1)	—
bit 7							bit 0

Legend:			
R = Readable bit	W = Writable bit	U = Unimplemented bit, read as ‘0’	
-n = Value at POR	‘1’ = Bit is set	‘0’ = Bit is cleared	x = Bit is unknown

bit 15-2 **Unimplemented:** Read as ‘0’

bit 1 **CCSMD:** Constant Current Source Module Disable bit(1)
1 = Constant current source module is disabled
0 = Constant current source module is enabled

bit 0 **Unimplemented:** Read as ‘0’

Note 1: This bit is not implemented in dsPIC33FJ06GS101A/102A/202A devices.

© 2011-2012 Microchip Technology Inc.

10.0 I/O PORTS

Note 1: This data sheet summarizes the features of the dsPIC33FJ06GS001/101A/102A/202A and dsPIC33FJ09GS302 family of devices. It is not intended to be a comprehensive reference source. To complement the information in this data sheet, refer to **Section 10. "I/O Ports"** (DS70193) in the *"dsPIC33F/PIC24H Family Reference Manual"*, which is available on the Microchip web site (www.microchip.com).

2: Some registers and associated bits described in this section may not be available on all devices. Refer to **Section 4.0 "Memory Organization"** in this data sheet for device-specific register and bit information.

All of the device pins (except VDD, VSS, $\overline{\text{MCLR}}$ and OSC1/CLKI) are shared among the peripherals and the parallel I/O ports. All I/O input ports feature Schmitt Trigger inputs for improved noise immunity.

10.1 Parallel I/O (PIO) Ports

Generally a parallel I/O port that shares a pin with a peripheral is subservient to the peripheral. The peripheral's output buffer data and control signals are provided to a pair of multiplexers. The multiplexers select whether the peripheral or the associated port has ownership of the output data and control signals of the I/O pin. The logic also prevents "loop through", in which a port's digital output can drive the input of a peripheral that shares the same pin. Figure 10-1 shows how ports are shared with other peripherals and the associated I/O pin to which they are connected.

When a peripheral is enabled and the peripheral is actively driving an associated pin, the use of the pin as a general purpose output pin is disabled. The I/O pin can be read, but the output driver for the parallel port bit is disabled. If a peripheral is enabled, but the peripheral is not actively driving a pin, that pin can be driven by a port.

All port pins have three registers directly associated with their operation as digital I/O. The Data Direction register (TRISx) determines whether the pin is an input or an output. If the data direction bit is '1', then the pin is an input. All port pins are defined as inputs after a Reset. Reads from the latch (LATx) read the latch. Writes to the latch write the latch. Reads from the port (PORTx) read the port pins, while writes to the port pins write the latch.

Any bit and its associated data and control registers that are not valid for a particular device will be disabled. That means the corresponding LATx and TRISx registers and the port pin will read as zeros.

When a pin is shared with another peripheral or function that is defined as an input only, it is nevertheless regarded as a dedicated port because there is no other competing source of outputs.

FIGURE 10-1: BLOCK DIAGRAM OF A TYPICAL SHARED PORT STRUCTURE

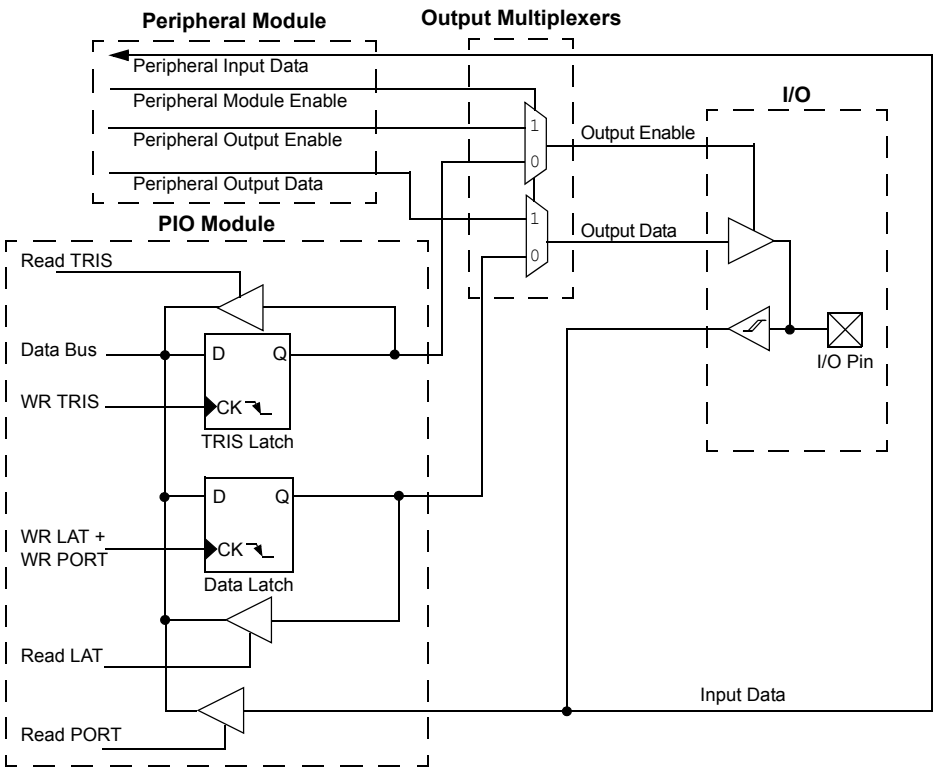

© 2011-2012 Microchip Technology Inc.

10.2 Open-Drain Configuration

In addition to the PORT, LAT and TRIS registers for data control, some digital only port pins can also be individually configured for either digital or open-drain output. This is controlled by the Open-Drain Control register, ODCx, associated with each port. Setting any of the bits configures the corresponding pin to act as an open-drain output.

The open-drain feature allows the generation of outputs higher than VDD (for example, 5V), on any desired 5V tolerant pins, by using external pull-up resistors. The maximum open-drain voltage allowed is the same as the maximum VIH specification.

Refer to the **"Pin Diagrams"** section for the available pins and their functionality.

10.3 Configuring Analog Port Pins

The ADPCFG and TRIS registers control the operation of the Analog-to-Digital port pins. The port pins that are to function as analog inputs must have their corresponding TRIS bit set (input). If the TRIS bit is cleared (output), the digital output level (VOH or VOL) will be converted.

The ADPCFG register has a default value of 0x0000; therefore, all pins that share ANx functions are analog (not digital) by default.

When the PORT register is read, all pins configured as analog input channels will read as cleared (a low level).

Pins configured as digital inputs will not convert an analog input. Analog levels on any pin, defined as a digital input (including the ANx pins), can cause the input buffer to consume current that exceeds the device specifications.

10.4 I/O Port Write/Read Timing

One instruction cycle is required between a port direction change or port write operation and a read operation of the same port. Typically, this instruction would be a NOP. An example is shown in Example 10-1.

10.5 Input Change Notification

The Input Change Notification function of the I/O ports allows devices to generate interrupt requests to the processor in response to a Change-of-State (COS) on selected input pins. This feature can detect input Change-of-States (COS), even in Sleep mode when the clocks are disabled. Depending on the device pin count, up to 16 external signals (CNx pin) can be selected (enabled) for generating an interrupt request on a Change-of-State.

Four control registers are associated with the CN module. The CNEN1 register contains the interrupt enable control bits for each of the CN input pins. Setting any of these bits enables a CN interrupt for the corresponding pin.

Each CN pin also has a weak pull-up connected to it. The pull-ups act as a current source connected to the pin and eliminate the need for external resistors when the push button or keypad devices are connected. The pull-ups are enabled separately, using the CNPU1 register, which contains the control bits for each of the CN pins. Setting any of the control bits enables the weak pull-ups for the corresponding pins.

Note:	Pull-ups on change notification pins should always be disabled when the port pin is configured as a digital output.

EXAMPLE 10-1: PORT WRITE/READ EXAMPLE

```
MOV   0xFF00, W0          ; Configure PORTB<15:8> as inputs
MOV   W0, TRISBB          ; and PORTB<7:0> as outputs
NOP                       ; Delay 1 cycle
BTSS  PORTB, #13          ; Next Instruction
```

10.6 Peripheral Pin Select (PPS)

Peripheral Pin Select configuration enables peripheral set selection and placement on a wide range of I/O pins. By increasing the pinout options available on a particular device, programmers can better tailor the microcontroller to their entire application, rather than trimming the application to fit the device.

The Peripheral Pin Select configuration feature operates over a fixed subset of digital I/O pins. Programmers can independently map the input and/or output of most digital peripherals to any one of these I/O pins. Peripheral Pin Select is performed in software and generally does not require the device to be reprogrammed. Hardware safeguards are included that prevent accidental or spurious changes to the peripheral mapping once it has been established.

10.6.1 AVAILABLE PINS

The Peripheral Pin Select feature is used with a range of up to 16 pins. The number of available pins depends on the particular device and its pin count. Pins that support the Peripheral Pin Select feature include the designation, “RPn”, in their full pin designation, where “RP” designates a remappable peripheral and “n” is the remappable pin number.

10.6.2 CONTROLLING PERIPHERAL PIN SELECT

Peripheral Pin Select features are controlled through two sets of Special Function Registers: one to map peripheral inputs and one to map outputs. Because they are separately controlled, a particular peripheral’s input and output (if the peripheral has both) can be placed on any selectable function pin without constraint.

The association of a peripheral to a peripheral selectable pin is handled in two different ways, depending on whether an input or output is being mapped.

10.6.2.1 Input Mapping

The inputs of the Peripheral Pin Select options are mapped on the basis of the peripheral. A control register associated with a peripheral dictates the pin it will be mapped to. The RPINRx registers are used to configure peripheral input mapping (see Register 10-1 through Register 10-15). Each register contains sets of 6-bit fields, with each set associated with one of the remappable peripherals. Programming a given peripheral’s bit field with an appropriate 6-bit value maps the RPn pin with that value to that peripheral. For any given device, the valid range of values for any bit field corresponds to the maximum number of Peripheral Pin Selections supported by the device.

Figure 10-2 illustrates the remappable pin selection for the U1RX input.

Note: For input mapping only, the Peripheral Pin Select (PPS) functionality does not have priority over the TRISx settings. Therefore, when configuring the RPx pin for input, the corresponding bit in the TRISx register must also be configured for input (i.e., set to ‘1’).

FIGURE 10-2: REMAPPABLE MUX INPUT FOR U1RX

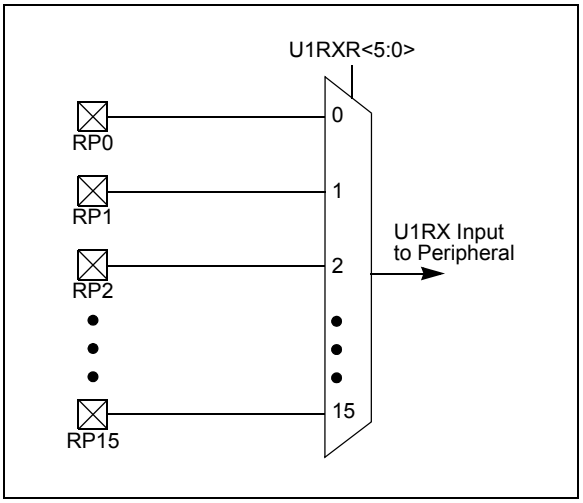

© 2011-2012 Microchip Technology Inc.

TABLE 10-1: SELECTABLE INPUT SOURCES (MAPS INPUT TO FUNCTION)

Input Name	Function Name	Register	Configuration Bits
External Interrupt 1	INT1	RPINR0	INT1R<5:0>
External Interrupt 2	INT2	RPINR1	INT2R<5:0>
Timer1 External Clock	T1CK	RPINR2	T1CKR<5:0>
Timer2 External Clock	T2CK	RPINR3	T2CKR<5:0>
Input Capture 1	IC1	RPINR7	IC1R<5:0>
Output Compare Fault A	OCFA	RPINR11	OCFAR<5:0>
UART1 Receive	U1RX	RPINR18	U1RXR<5:0>
UART1 Clear-to-Send	$\overline{\text{U1CTS}}$	RPINR18	U1CTSR<5:0>
SPI Data Input 1	SDI1	RPINR20	SDI1R<5:0>
SPI Clock Input 1	SCK1	RPINR20	SCK1R<5:0>
SPI Slave Select Input 1	$\overline{\text{SS1}}$	RPINR21	SS1R<5:0>
PWM Fault Input	FLT1	RPINR29	FLT1R<5:0>
PWM Fault Input	FLT2	RPINR30	FLT2R<5:0>
PWM Fault Input	FLT3	RPINR30	FLT3R<5:0>
PWM Fault Input	FLT4	RPINR31	FLT4R<5:0>
PWM Fault Input	FLT5	RPINR31	FLT5R<5:0>
PWM Fault Input	FLT6	RPINR32	FLT6R<5:0>
PWM Fault Input	FLT7	RPINR32	FLT7R<5:0>
PWM Fault Input	FLT8	RPINR33	FLT8R<5:0>
External Synchronization Signal to PWM Master Time Base	SYNCI1	RPINR33	SYNCI1R<5:0>
External Synchronization Signal to PWM Master Time Base	SYNCI2	RPINR34	SYNCI2R<5:0>

10.6.2.2 Output Mapping

In contrast to inputs, the outputs of the Peripheral Pin Select options are mapped on the basis of the pin. In this case, a control register associated with a particular pin dictates the peripheral output to be mapped. The RPORx registers are used to control output mapping. Like the RPINRx registers, each register contains sets of 6-bit fields, with each set associated with one RPn pin (see Register 10-16 through Register 10-25). The value of the bit field corresponds to one of the peripherals and that peripheral's output is mapped to the pin (see Table 10-2 and Figure 10-3).

The list of peripherals for output mapping also includes a null value of '00000' because of the mapping technique. This permits any given pin to remain unconnected from the output of any of the pin selectable peripherals.

FIGURE 10-3: MULTIPLEXING OF REMAPPABLE OUTPUT FOR RPn

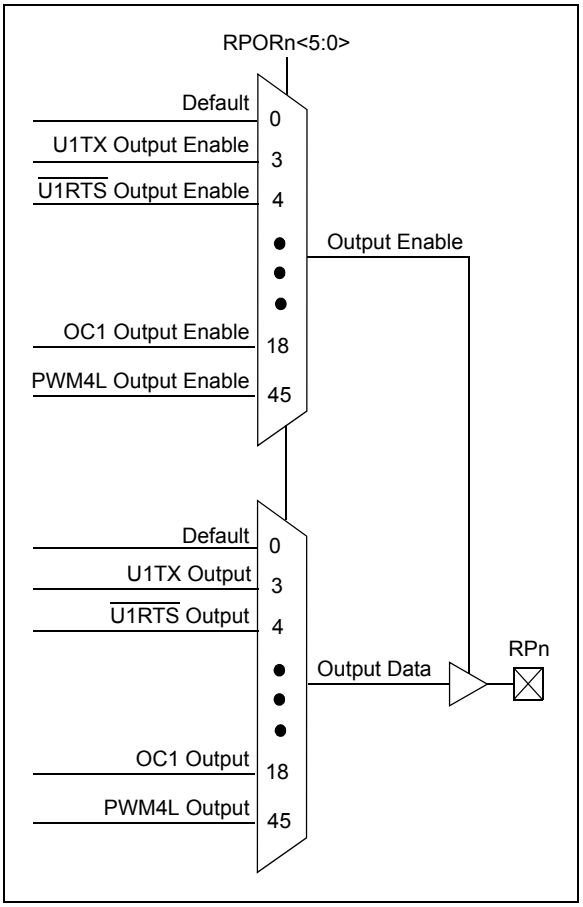

TABLE 10-2: OUTPUT SELECTION FOR REMAPPABLE PIN (RPn)

Function	RPORn<5:0>	Output Name
NULL	000000	RPn tied to default port pin
U1TX	000011	RPn tied to UART1 transmit
$\overline{\text{U1RTS}}$	000100	RPn tied to UART1 Ready-to-Send
SDO1	000111	RPn tied to SPI1 data output
SCK1	001000	RPn tied to SPI1 clock output
$\overline{\text{SS1}}$	001001	RPn tied to SPI1 slave select output
OC1	010010	RPn tied to Output Compare 1
SYNCO1	100101	RPn tied to external device synchronization signal via PWM master time base
REFCLKO	100110	REFCLK output signal
ACMP1	100111	RPn tied to Analog Comparator 1 output
ACMP2	101000	RPn tied to Analog Comparator 2 output
PWM4H	101100	RPn tied to PWM output pins associated with PWM Generator 4
PWM4L	101101	RPn tied to PWM output pins associated with PWM Generator 4

© 2011-2012 Microchip Technology Inc.

10.6.2.3 Virtual Pins

Four virtual RPn pins (RP32, RP33, RP34 and RP35) are supported, which are identical in functionality to all other RPn pins, with the exception of pinouts. These four pins are internal to the devices and are not connected to a physical device pin.

These pins provide a simple way for inter-peripheral connection without utilizing a physical pin. For example, the output of the analog comparator can be connected to RP32 and the PWM Fault input can be configured for RP32 as well. This configuration allows the analog comparator to trigger PWM Faults without the use of an actual physical pin on the device.

10.6.3 CONTROLLING CONFIGURATION CHANGES

Because peripheral remapping can be changed during run time, some restrictions on peripheral remapping are needed to prevent accidental configuration changes. dsPIC33F devices include three features to prevent alterations to the peripheral map:

- Control register lock sequence
- Continuous state monitoring
- Configuration bit pin select lock

10.6.3.1 Control Register Lock

Under normal operation, writes to the RPINRx and RPORx registers are not allowed. Attempted writes appear to execute normally, but the contents of the registers remain unchanged. To change these registers, they must be unlocked in hardware. The register lock is controlled by the IOLOCK bit (OSCCON<6>). Setting IOLOCK prevents writes to the control registers; clearing IOLOCK allows writes.

To set or clear IOLOCK, a specific command sequence must be executed:

1. Write 0x46 to OSCCON<7:0>.
2. Write 0x57 to OSCCON<7:0>.
3. Clear (or set) IOLOCK as a single operation.

> **Note:** MPLAB® C30 provides built-in C language functions for unlocking the OSCCON register:
>
> ```
> __builtin_write_OSCCONL(value)
> __builtin_write_OSCCONH(value)
> ```
>
> See the MPLAB C30 Help files for more information.

Unlike the similar sequence with the oscillator's LOCK bit, IOLOCK remains in one state until changed. This allows all of the Peripheral Pin Selects to be configured with a single unlock sequence, followed by an update to all control registers, then locked with a second lock sequence.

10.6.3.2 Continuous State Monitoring

In addition to being protected from direct writes, the contents of the RPINRx and RPORx registers are constantly monitored in hardware by shadow registers. If an unexpected change in any of the registers occurs (such as cell disturbances caused by ESD or other external events), a Configuration Mismatch Reset will be triggered.

10.6.3.3 Configuration Bit Pin Select Lock

As an additional level of safety, the device can be configured to prevent more than one write session to the RPINRx and RPORx registers. The IOL1WAY (FOSC<5>) Configuration bit blocks the IOLOCK bit from being cleared, after it has been set once. If IOLOCK remains set, the register unlock procedure will not execute and the Peripheral Pin Select Control registers cannot be written to. The only way to clear the bit and re-enable peripheral remapping is to perform a device Reset.

In the default (unprogrammed) state, IOL1WAY is set, restricting users to one write session. Programming IOL1WAY allows user applications unlimited access (with the proper use of the unlock sequence) to the Peripheral Pin Select registers.

10.7 I/O Helpful Tips

1. In some cases, certain pins, as defined in Table 25-9 under “Injection Current”, have internal protection diodes to VDD and VSS. The term, “Injection Current”, is also referred to as “Clamp Current”. On designated pins, with sufficient external current limiting precautions by the user, I/O pin input voltages are allowed to be greater or less than the data sheet absolute maximum ratings with respect to the VSS and VDD supplies. Note that when the user application forward biases either of the high or low side internal input clamp diodes, that the resulting current being injected into the device that is clamped internally by the VDD and VSS power rails, may affect the ADC accuracy by four to six counts.
2. I/O pins that are shared with any analog input pin (i.e., ANx) are always analog pins by default after any Reset. Consequently, any pin(s) configured as an analog input pin, automatically disables the digital input pin buffer. As such, any attempt to read a digital input pin will always return a ‘0’, regardless of the digital logic level on the pin if the analog pin is configured. To use a pin as a digital I/O pin on a shared ANx pin, the user application needs to configure the Analog Pin register in the ADC module (i.e., ADPCFG) by setting the appropriate bit that corresponds to that I/O port pin to a ‘1’. On devices with more than one ADC, both analog pin configurations for both ADC modules must be configured as a digital I/O pin for that pin to function as a digital I/O pin.

Note:	Although it is not possible to use a digital input pin when its analog function is enabled, it is possible to use the digital I/O output function, TRISx = 0x0, while the analog function is also enabled. However, this is not recommended, particularly if the analog input is connected to an external analog voltage source, which would create signal contention between the analog signal and the output pin driver.

3. Most I/O pins have multiple functions. Referring to the device pin diagrams in the data sheet, the priorities of the functions allocated to any pins are indicated by reading the pin name from left-to-right. The left most function name takes precedence over any function to its right in the naming convention; for example: AN2/CMP1C/CMP2A/RA2. This indicates that AN2 is the highest priority in this example and will supersede all other functions to its right in the list. Those other functions to its right, even if enabled, would not work as long as any other function to its left was enabled. This rule applies to all of the functions listed for a given pin.
4. Each CN pin has a configurable internal weak pull-up resistor. The pull-ups act as a current source connected to the pin and eliminates the need for external resistors in certain applications. The internal pull-up is to ~(VDD – 0.8), not VDD. This is still above the minimum VIH of CMOS and TTL devices.
5. When driving LEDs directly, the I/O pin can source or sink more current than what is specified in the VOH/IOH and VOL/IOL DC Characteristics specification. The respective IOH and IOL current rating only applies to maintaining the corresponding output at or above the VOH, and at or below the VOL levels. However, for LEDs, unlike digital inputs of an externally connected device, they are not governed by the same minimum VIH/VIL levels. An I/O pin output can safely sink or source any current less than that listed in the **“Absolute Maximum Ratings(1)”** in **Section 25.0, Electrical Characteristics** of this data sheet. For example:

   VOH = 2.4V @ IOL = -6 mA and VDD = 3.3V

   The maximum output current sourced by any 4x I/O pin = 15 mA.

LED source current <15 mA is technically permitted. Refer to the VOH/IOH graphs in **Section 26.0 “DC and AC Device Characteristics Graphs”** for additional information.

10.8 I/O Resources

Many useful resources related to I/O are provided on the Microchip web site (www.microchip.com).

10.8.1 KEY RESOURCES

- *“dsPIC33F/PIC24H Family Reference Manual”*, **Section 10. “I/O Ports”** (DS70193)
- Code Samples
- Application Notes
- Software Libraries
- Webinars
- All related “*dsPIC33F/PIC24H Family Reference Manual”* Sections
- Development Tools

© 2011-2012 Microchip Technology Inc.

10.9 Peripheral Pin Select Registers

The following registers are implemented for remappable peripheral configuration:

- 15 Input Remappable Peripheral Registers
- 19 Output Remappable Peripheral Registers

> **Note:** Input and output register values can only be changed if IOLOCK (OSCCON<6>) = 0. See **Section 10.6.3.1 "Control Register Lock"** for a specific command sequence.

Not all Output Remappable Peripheral registers are implemented on all devices. See the register description of the specific register for further details.

REGISTER 10-1: RPINR0: PERIPHERAL PIN SELECT INPUT REGISTER 0

U-0	U-0	R/W-1	R/W-1	R/W-1	R/W-1	R/W-1	R/W-1
—	—	INT1R<5:0>					
bit 15							bit 8

U-0	U-0	U-0	U-0	U-0	U-0	U-0	U-0
—	—	—	—	—	—	—	—
bit 7							bit 0

Legend:			
R = Readable bit	W = Writable bit	U = Unimplemented bit, read as '0'	
-n = Value at POR	'1' = Bit is set	'0' = Bit is cleared	x = Bit is unknown

bit 15-14 **Unimplemented:** Read as '0'

bit 13-8 **INT1R<5:0>:** Assign External Interrupt 1 (INTR1) to the Corresponding RPn Pin bits

111111 = Input tied to Vss
100011 = Input tied to RP35
100010 = Input tied to RP34
100001 = Input tied to RP33
100000 = Input tied to RP32
•
•
•
00000 = Input tied to RP0

bit 7-0 **Unimplemented:** Read as '0'

REGISTER 10-2: RPINR1: PERIPHERAL PIN SELECT INPUT REGISTER 1

U-0	U-0	U-0	U-0	U-0	U-0	U-0	U-0
—	—	—	—	—	—	—	—
bit 15							bit 8

U-0	U-0	R/W-1	R/W-1	R/W-1	R/W-1	R/W-1	R/W-1
—	—	INT2R<5:0>					
bit 7							bit 0

Legend:			
R = Readable bit	W = Writable bit	U = Unimplemented bit, read as ‘0’	
-n = Value at POR	‘1’ = Bit is set	‘0’ = Bit is cleared	x = Bit is unknown

bit 15-6 **Unimplemented:** Read as ‘0’

bit 5-0 **INT2R<5:0>:** Assign External Interrupt 2 (INTR2) to the Corresponding RPn Pin bits

111111 = Input tied to Vss
100011 = Input tied to RP35
100010 = Input tied to RP34
100001 = Input tied to RP33
100000 = Input tied to RP32
•
•
•
00000 = Input tied to RP0

© 2011-2012 Microchip Technology Inc.

REGISTER 10-3: RPINR2: PERIPHERAL PIN SELECT INPUT REGISTER 2

U-0	U-0	R/W-1	R/W-1	R/W-1	R/W-1	R/W-1	R/W-1
—	—	T1CKR<5:0>					
bit 15							bit 8

U-0	U-0	U-0	U-0	U-0	U-0	U-0	U-0
—	—	—	—	—	—	—	—
bit 7							bit 0

Legend:			
R = Readable bit	W = Writable bit	U = Unimplemented bit, read as ‘0’	
-n = Value at POR	‘1’ = Bit is set	‘0’ = Bit is cleared	x = Bit is unknown

bit 15-14 **Unimplemented:** Read as ‘0’

bit 13-8 **T1CKR<5:0>:** Assign Timer1 External Clock (T1CK) to the Corresponding RPn Pin bits

111111 = Input tied to Vss
100011 = Input tied to RP35
100010 = Input tied to RP34
100001 = Input tied to RP33
100000 = Input tied to RP32
•
•
•
00000 = Input tied to RP0

bit 7-0 **Unimplemented:** Read as ‘0’

REGISTER 10-4: RPINR3: PERIPHERAL PIN SELECT INPUT REGISTER 3

U-0	U-0	U-0	U-0	U-0	U-0	U-0	U-0
—	—	—	—	—	—	—	—
bit 15							bit 8

U-0	U-0	R/W-1	R/W-1	R/W-1	R/W-1	R/W-1	R/W-1
—	—	T2CKR<5:0>					
bit 7							bit 0

Legend:			
R = Readable bit	W = Writable bit	U = Unimplemented bit, read as ‘0’	
-n = Value at POR	‘1’ = Bit is set	‘0’ = Bit is cleared	x = Bit is unknown

bit 15-6 **Unimplemented:** Read as ‘0’

bit 5-0 **T2CKR<5:0>:** Assign Timer2 External Clock (T2CK) to the Corresponding RPn Pin bits

111111 = Input tied to Vss
100011 = Input tied to RP35
100010 = Input tied to RP34
100001 = Input tied to RP33
100000 = Input tied to RP32
•
•
•
00000 = Input tied to RP0

© 2011-2012 Microchip Technology Inc.

REGISTER 10-5: RPINR7: PERIPHERAL PIN SELECT INPUT REGISTER 7

U-0	U-0	U-0	U-0	U-0	U-0	U-0	U-0
—	—	—	—	—	—	—	—
bit 15							bit 8

U-0	U-0	R/W-1	R/W-1	R/W-1	R/W-1	R/W-1	R/W-1
—	—	IC1R<5:0>(1)					
bit 7							bit 0

Legend:			
R = Readable bit	W = Writable bit	U = Unimplemented bit, read as ‘0’	
-n = Value at POR	‘1’ = Bit is set	‘0’ = Bit is cleared	x = Bit is unknown

bit 15-6 **Unimplemented:** Read as ‘0’

bit 5-0 **IC1R<5:0>:** Assign Input Capture 1 (IC1) to the Corresponding RPn Pin bits(1)

111111 = Input tied to Vss
100011 = Input tied to RP35
100010 = Input tied to RP34
100001 = Input tied to RP33
100000 = Input tied to RP32
•
•
•
00000 = Input tied to RP0

Note 1: These bits are not implemented in dsPIC33FJ06GS001/101A/102A devices.

REGISTER 10-6: RPINR11: PERIPHERAL PIN SELECT INPUT REGISTER 11

U-0	U-0	U-0	U-0	U-0	U-0	U-0	U-0
—	—	—	—	—	—	—	—
bit 15							bit 8

U-0	U-0	R/W-1	R/W-1	R/W-1	R/W-1	R/W-1	R/W-1
—	—	OCFAR<5:0>(1)					
bit 7							bit 0

Legend:			
R = Readable bit	W = Writable bit	U = Unimplemented bit, read as ‘0’	
-n = Value at POR	‘1’ = Bit is set	‘0’ = Bit is cleared	x = Bit is unknown

bit 15-6 **Unimplemented:** Read as ‘0’

bit 5-0 **OCFAR<5:0>:** Assign Output Compare A (OCFA) to the Corresponding RPn Pin bits(1)

111111 = Input tied to Vss
100011 = Input tied to RP35
100010 = Input tied to RP34
100001 = Input tied to RP33
100000 = Input tied to RP32
•
•
•
00000 = Input tied to RP0

Note 1: These bits are not implemented in the dsPIC33FJ06GS001 device.

© 2011-2012 Microchip Technology Inc.

REGISTER 10-7: RPINR18: PERIPHERAL PIN SELECT INPUT REGISTER 18

U-0	U-0	R/W-1	R/W-1	R/W-1	R/W-1	R/W-1	R/W-1
—	—	U1CTSR<5:0>(1)					
bit 15							bit 8

U-0	U-0	R/W-1	R/W-1	R/W-1	R/W-1	R/W-1	R/W-1
—	—	U1RXR<5:0>(1)					
bit 7							bit 0

Legend:			
R = Readable bit	W = Writable bit	U = Unimplemented bit, read as ‘0’	
-n = Value at POR	‘1’ = Bit is set	‘0’ = Bit is cleared	x = Bit is unknown

bit 15-14 **Unimplemented:** Read as ‘0’

bit 13-8 **U1CTSR<5:0>:** Assign UART1 Clear-to-Send ($\overline{\text{U1CTS}}$) to the Corresponding RPn Pin bits(1)

111111 = Input tied to Vss
100011 = Input tied to RP35
100010 = Input tied to RP34
100001 = Input tied to RP33
100000 = Input tied to RP32
•
•
•
00000 = Input tied to RP0

bit 7-6 **Unimplemented:** Read as ‘0’

bit 5-0 **U1RXR<5:0>:** Assign UART1 Receive (U1RX) to the Corresponding RPn Pin bits(1)

111111 = Input tied to Vss
100011 = Input tied to RP35
100010 = Input tied to RP34
100001 = Input tied to RP33
100000 = Input tied to RP32
•
•
•
00000 = Input tied to RP0

Note 1: These bits are not implemented in the dsPIC33FJ06GS001 device.

REGISTER 10-8: RPINR20: PERIPHERAL PIN SELECT INPUT REGISTER 20

U-0	U-0	R/W-1	R/W-1	R/W-1	R/W-1	R/W-1	R/W-1
—	—	SCK1R<5:0>(1)					
bit 15							bit 8

U-0	U-0	R/W-1	R/W-1	R/W-1	R/W-1	R/W-1	R/W-1
—	—	SDI1R<5:0>(1)					
bit 7							bit 0

Legend:			
R = Readable bit	W = Writable bit	U = Unimplemented bit, read as ‘0’	
-n = Value at POR	‘1’ = Bit is set	‘0’ = Bit is cleared	x = Bit is unknown

bit 15-14 **Unimplemented:** Read as ‘0’

bit 13-8 **SCK1R<5:0>:** Assign SPI1 Clock Input (SCK1) to the Corresponding RPn Pin bits(1)

111111 = Input tied to Vss
100011 = Input tied to RP35
100010 = Input tied to RP34
100001 = Input tied to RP33
100000 = Input tied to RP32
•
•
•
00000 = Input tied to RP0

bit 7-6 **Unimplemented:** Read as ‘0’

bit 5-0 **SDI1R<5:0>:** Assign SPI1 Data Input (SDI1) to the Corresponding RPn Pin bits(1)

111111 = Input tied to Vss
100011 = Input tied to RP35
100010 = Input tied to RP34
100001 = Input tied to RP33
100000 = Input tied to RP32
•
•
•
00000 = Input tied to RP0

Note 1: These bits are not implemented in the dsPIC33FJ06GS001 device.

© 2011-2012 Microchip Technology Inc.

REGISTER 10-9: RPINR21: PERIPHERAL PIN SELECT INPUT REGISTER 21

U-0	U-0	U-0	U-0	U-0	U-0	U-0	U-0
—	—	—	—	—	—	—	—
bit 15							bit 8

U-0	U-0	R/W-1	R/W-1	R/W-1	R/W-1	R/W-1	R/W-1
—	—	SS1R<5:0>(1)					
bit 7							bit 0

Legend:			
R = Readable bit	W = Writable bit	U = Unimplemented bit, read as ‘0’	
-n = Value at POR	‘1’ = Bit is set	‘0’ = Bit is cleared	x = Bit is unknown

bit 15-6 **Unimplemented:** Read as ‘0’

bit 5-0 **SS1R<5:0>:** Assign SPI1 Slave Select Input ($\overline{SS1}$) to the Corresponding RPn Pin bits(1)

111111 = Input tied to Vss
100011 = Input tied to RP35
100010 = Input tied to RP34
100001 = Input tied to RP33
100000 = Input tied to RP32
•
•
•
00000 = Input tied to RP0

Note 1: These bits are not implemented in the dsPIC33FJ06GS001 device.

REGISTER 10-10: RPINR29: PERIPHERAL PIN SELECT INPUT REGISTER 29

U-0	U-0	R/W-1	R/W-1	R/W-1	R/W-1	R/W-1	R/W-1
—	—	FLT1R<5:0>					
bit 15							bit 8

U-0	U-0	U-0	U-0	U-0	U-0	U-0	U-0
—	—	—	—	—	—	—	—
bit 7							bit 0

Legend:			
R = Readable bit	W = Writable bit	U = Unimplemented bit, read as ‘0’	
-n = Value at POR	‘1’ = Bit is set	‘0’ = Bit is cleared	x = Bit is unknown

bit 15-14 **Unimplemented:** Read as ‘0’

bit 13-8 **FLT1R<5:0>:** Assign PWM Fault Input 1 (FLT1) to the Corresponding RPn Pin bits

111111 = Input tied to VSS
100011 = Input tied to RP35
100010 = Input tied to RP34
100001 = Input tied to RP33
100000 = Input tied to RP32
•
•
•
00000 = Input tied to RP0

bit 7-0 **Unimplemented:** Read as ‘0’

© 2011-2012 Microchip Technology Inc.

REGISTER 10-11: RPINR30: PERIPHERAL PIN SELECT INPUT REGISTER 30

U-0	U-0	R/W-1	R/W-1	R/W-1	R/W-1	R/W-1	R/W-1
—	—	FLT3R<5:0>					
bit 15							bit 8

U-0	U-0	R/W-1	R/W-1	R/W-1	R/W-1	R/W-1	R/W-1
—	—	FLT2R<5:0>					
bit 7							bit 0

Legend:			
R = Readable bit	W = Writable bit	U = Unimplemented bit, read as ‘0’	
-n = Value at POR	‘1’ = Bit is set	‘0’ = Bit is cleared	x = Bit is unknown

bit 15-14 **Unimplemented:** Read as ‘0’

bit 13-8 **FLT3R<5:0>:** Assign PWM Fault Input 3 (FLT3) to the Corresponding RPn Pin bits

111111 = Input tied to Vss
100011 = Input tied to RP35
100010 = Input tied to RP34
100001 = Input tied to RP33
100000 = Input tied to RP32
•
•
•
00000 = Input tied to RP0

bit 7-6 **Unimplemented:** Read as ‘0’

bit 5-0 **FLT2R<5:0>:** Assign PWM Fault Input 2 (FLT2) to the Corresponding RPn Pin bits

111111 = Input tied to Vss
100011 = Input tied to RP35
100010 = Input tied to RP34
100001 = Input tied to RP33
100000 = Input tied to RP32
•
•
•
00000 = Input tied to RP0

REGISTER 10-12: RPINR31: PERIPHERAL PIN SELECT INPUT REGISTER 31

U-0	U-0	R/W-1	R/W-1	R/W-1	R/W-1	R/W-1	R/W-1
—	—	FLT5R<5:0>					
bit 15							bit 8

U-0	U-0	R/W-1	R/W-1	R/W-1	R/W-1	R/W-1	R/W-1
—	—	FLT4R<5:0>					
bit 7							bit 0

Legend:			
R = Readable bit	W = Writable bit	U = Unimplemented bit, read as ‘0’	
-n = Value at POR	‘1’ = Bit is set	‘0’ = Bit is cleared	x = Bit is unknown

bit 15-14 **Unimplemented:** Read as ‘0’

bit 13-8 **FLT5R<5:0>:** Assign PWM Fault Input 5 (FLT5) to the Corresponding RPn Pin bits

111111 = Input tied to Vss
100011 = Input tied to RP35
100010 = Input tied to RP34
100001 = Input tied to RP33
100000 = Input tied to RP32
•
•
•
00000 = Input tied to RP0

bit 7-6 **Unimplemented:** Read as ‘0’

bit 5-0 **FLT4R<5:0>:** Assign PWM Fault Input 4 (FLT4) to the Corresponding RPn Pin bits

111111 = Input tied to Vss
100011 = Input tied to RP35
100010 = Input tied to RP34
100001 = Input tied to RP33
100000 = Input tied to RP32
•
•
•
00000 = Input tied to RP0

© 2011-2012 Microchip Technology Inc.

REGISTER 10-13: RPINR32: PERIPHERAL PIN SELECT INPUT REGISTER 32

U-0	U-0	R/W-1	R/W-1	R/W-1	R/W-1	R/W-1	R/W-1
—	—	FLT7R<5:0>					
bit 15							bit 8

U-0	U-0	R/W-1	R/W-1	R/W-1	R/W-1	R/W-1	R/W-1
—	—	FLT6R<5:0>					
bit 7							bit 0

Legend:			
R = Readable bit	W = Writable bit	U = Unimplemented bit, read as ‘0’	
-n = Value at POR	‘1’ = Bit is set	‘0’ = Bit is cleared	x = Bit is unknown

bit 15-14 **Unimplemented:** Read as ‘0’

bit 13-8 **FLT7R<5:0>:** Assign PWM Fault Input 7 (FLT7) to the Corresponding RPn Pin bits

111111 = Input tied to Vss
100011 = Input tied to RP35
100010 = Input tied to RP34
100001 = Input tied to RP33
100000 = Input tied to RP32
•
•
•
00000 = Input tied to RP0

bit 7-6 **Unimplemented:** Read as ‘0’

bit 5-0 **FLT6R<5:0>:** Assign PWM Fault Input 6 (FLT6) to the Corresponding RPn Pin bits

111111 = Input tied to Vss
100011 = Input tied to RP35
100010 = Input tied to RP34
100001 = Input tied to RP33
100000 = Input tied to RP32
•
•
•
00000 = Input tied to RP0

REGISTER 10-14: RPINR33: PERIPHERAL PIN SELECT INPUT REGISTER 33

U-0	U-0	R/W-1	R/W-1	R/W-1	R/W-1	R/W-1	R/W-1
—	—	SYNCI1R<5:0>					
bit 15							bit 8

U-0	U-0	R/W-1	R/W-1	R/W-1	R/W-1	R/W-1	R/W-1
—	—	FLT8R<5:0>					
bit 7							bit 0

Legend:			
R = Readable bit	W = Writable bit	U = Unimplemented bit, read as ‘0’	
-n = Value at POR	‘1’ = Bit is set	‘0’ = Bit is cleared	x = Bit is unknown

bit 15-14 **Unimplemented:** Read as ‘0’

bit 13-8 **SYNCI1R<5:0>:** Assign PWM Master Time Base External Synchronization Signal to the Corresponding RPn Pin bits

111111 = Input tied to Vss
100011 = Input tied to RP35
100010 = Input tied to RP34
100001 = Input tied to RP33
100000 = Input tied to RP32
•
•
•
00000 = Input tied to RP0

bit 7-6 **Unimplemented:** Read as ‘0’

bit 5-0 **FLT8R<5:0>:** Assign PWM Fault Input 8 (FLT8) to the Corresponding RPn Pin bits

111111 = Input tied to Vss
100011 = Input tied to RP35
100010 = Input tied to RP34
100001 = Input tied to RP33
100000 = Input tied to RP32
•
•
•
00000 = Input tied to RP0

© 2011-2012 Microchip Technology Inc.

REGISTER 10-15: RPINR34: PERIPHERAL PIN SELECT INPUT REGISTER 34

U-0	U-0	U-0	U-0	U-0	U-0	U-0	U-0
—	—	—	—	—	—	—	—
bit 15							bit 8

U-0	U-0	R/W-1	R/W-1	R/W-1	R/W-1	R/W-1	R/W-1
—	—	SYNCI2R<5:0>					
bit 7							bit 0

Legend:			
R = Readable bit	W = Writable bit	U = Unimplemented bit, read as ‘0’	
-n = Value at POR	‘1’ = Bit is set	‘0’ = Bit is cleared	x = Bit is unknown

bit 15-6 **Unimplemented:** Read as ‘0’

bit 5-0 **SYNCI2R<5:0>:** Assign PWM Master Time Base External Synchronization Signal to the Corresponding RPn Pin bits

111111 = Input tied to Vss
100011 = Input tied to RP35
100010 = Input tied to RP34
100001 = Input tied to RP33
100000 = Input tied to RP32
•
•
•
00000 = Input tied to RP0

REGISTER 10-16: RPOR0: PERIPHERAL PIN SELECT OUTPUT REGISTER 0

U-0	U-0	R/W-0	R/W-0	R/W-0	R/W-0	R/W-0	R/W-0
—	—	RP1R<5:0>					
bit 15							bit 8

U-0	U-0	R/W-0	R/W-0	R/W-0	R/W-0	R/W-0	R/W-0
—	—	RP0R<5:0>					
bit 7							bit 0

Legend:			
R = Readable bit	W = Writable bit	U = Unimplemented bit, read as ‘0’	
-n = Value at POR	‘1’ = Bit is set	‘0’ = Bit is cleared	x = Bit is unknown

bit 15-14 **Unimplemented:** Read as ‘0’

bit 13-8 **RP1R<5:0>:** Peripheral Output Function is Assigned to RP1 Output Pin bits (see Table 10-2 for peripheral function numbers)

bit 7-6 **Unimplemented:** Read as ‘0’

bit 5-0 **RP0R<5:0>:** Peripheral Output Function is Assigned to RP0 Output Pin bits (see Table 10-2 for peripheral function numbers)

REGISTER 10-17: RPOR1: PERIPHERAL PIN SELECT OUTPUT REGISTER 1

U-0	U-0	R/W-0	R/W-0	R/W-0	R/W-0	R/W-0	R/W-0
—	—	RP3R<5:0>					
bit 15							bit 8

U-0	U-0	R/W-0	R/W-0	R/W-0	R/W-0	R/W-0	R/W-0
—	—	RP2R<5:0>					
bit 7							bit 0

Legend:			
R = Readable bit	W = Writable bit	U = Unimplemented bit, read as ‘0’	
-n = Value at POR	‘1’ = Bit is set	‘0’ = Bit is cleared	x = Bit is unknown

bit 15-14 **Unimplemented:** Read as ‘0’

bit 13-8 **RP3R<5:0>:** Peripheral Output Function is Assigned to RP3 Output Pin bits (see Table 10-2 for peripheral function numbers)

bit 7-6 **Unimplemented:** Read as ‘0’

bit 5-0 **RP2R<5:0>:** Peripheral Output Function is Assigned to RP2 Output Pin bits (see Table 10-2 for peripheral function numbers)

© 2011-2012 Microchip Technology Inc.

REGISTER 10-18: RPOR2: PERIPHERAL PIN SELECT OUTPUT REGISTER 2

U-0	U-0	R/W-0	R/W-0	R/W-0	R/W-0	R/W-0	R/W-0
—	—	RP5R<5:0>					
bit 15							bit 8

U-0	U-0	R/W-0	R/W-0	R/W-0	R/W-0	R/W-0	R/W-0
—	—	RP4R<5:0>					
bit 7							bit 0

Legend:			
R = Readable bit	W = Writable bit	U = Unimplemented bit, read as ‘0’	
-n = Value at POR	‘1’ = Bit is set	‘0’ = Bit is cleared	x = Bit is unknown

bit 15-14 **Unimplemented:** Read as ‘0’

bit 13-8 **RP5R<5:0>:** Peripheral Output Function is Assigned to RP5 Output Pin bits (see Table 10-2 for peripheral function numbers)

bit 7-6 **Unimplemented:** Read as ‘0’

bit 5-0 **RP4R<5:0>:** Peripheral Output Function is Assigned to RP4 Output Pin bits (see Table 10-2 for peripheral function numbers)

REGISTER 10-19: RPOR3: PERIPHERAL PIN SELECT OUTPUT REGISTER 3

U-0	U-0	R/W-0	R/W-0	R/W-0	R/W-0	R/W-0	R/W-0
—	—	RP7R<5:0>					
bit 15							bit 8

U-0	U-0	R/W-0	R/W-0	R/W-0	R/W-0	R/W-0	R/W-0
—	—	RP6R<5:0>					
bit 7							bit 0

Legend:			
R = Readable bit	W = Writable bit	U = Unimplemented bit, read as ‘0’	
-n = Value at POR	‘1’ = Bit is set	‘0’ = Bit is cleared	x = Bit is unknown

bit 15-14 **Unimplemented:** Read as ‘0’

bit 13-8 **RP7R<5:0>:** Peripheral Output Function is Assigned to RP7 Output Pin bits (see Table 10-2 for peripheral function numbers)

bit 7-6 **Unimplemented:** Read as ‘0’

bit 5-0 **RP6R<5:0>:** Peripheral Output Function is Assigned to RP6 Output Pin bits (see Table 10-2 for peripheral function numbers)

REGISTER 10-20: RPOR4: PERIPHERAL PIN SELECT OUTPUT REGISTER 4

U-0	U-0	R/W-0	R/W-0	R/W-0	R/W-0	R/W-0	R/W-0
—	—	RP9R<5:0>(1)					
bit 15							bit 8

U-0	U-0	R/W-0	R/W-0	R/W-0	R/W-0	R/W-0	R/W-0
—	—	RP8R<5:0>(1)					
bit 7							bit 0

Legend:			
R = Readable bit	W = Writable bit	U = Unimplemented bit, read as ‘0’	
-n = Value at POR	‘1’ = Bit is set	‘0’ = Bit is cleared	x = Bit is unknown

bit 15-14 **Unimplemented:** Read as ‘0’

bit 13-8 **RP9R<5:0>:** Peripheral Output Function is Assigned to RP9 Output Pin bits(1)
(see Table 10-2 for peripheral function numbers)

bit 7-6 **Unimplemented:** Read as ‘0’

bit 5-0 **RP8R<5:0>:** Peripheral Output Function is Assigned to RP8 Output Pin bits(1)
(see Table 10-2 for peripheral function numbers)

Note 1: These bits are not implemented in dsPIC33FJ06GS001/101A devices.

REGISTER 10-21: RPOR5: PERIPHERAL PIN SELECT OUTPUT REGISTER 5

U-0	U-0	R/W-0	R/W-0	R/W-0	R/W-0	R/W-0	R/W-0
—	—	RP11R<5:0>(1)					
bit 15							bit 8

U-0	U-0	R/W-0	R/W-0	R/W-0	R/W-0	R/W-0	R/W-0
—	—	RP10R<5:0>(1)					
bit 7							bit 0

Legend:			
R = Readable bit	W = Writable bit	U = Unimplemented bit, read as ‘0’	
-n = Value at POR	‘1’ = Bit is set	‘0’ = Bit is cleared	x = Bit is unknown

bit 15-14 **Unimplemented:** Read as ‘0’

bit 13-8 **RP11R<5:0>:** Peripheral Output Function is Assigned to RP11 Output Pin bits(1)
(see Table 10-2 for peripheral function numbers)

bit 7-6 **Unimplemented:** Read as ‘0’

bit 5-0 **RP10R<5:0>:** Peripheral Output Function is Assigned to RP10 Output Pin bits(1)
(see Table 10-2 for peripheral function numbers)

Note 1: These bits are not implemented in dsPIC33FJ06GS001/101A devices.

© 2011-2012 Microchip Technology Inc.

REGISTER 10-22: RPOR6: PERIPHERAL PIN SELECT OUTPUT REGISTER 6

U-0	U-0	R/W-0	R/W-0	R/W-0	R/W-0	R/W-0	R/W-0
—	—	RP13R<5:0>(1)					
bit 15							bit 8

U-0	U-0	R/W-0	R/W-0	R/W-0	R/W-0	R/W-0	R/W-0
—	—	RP12R<5:0>(1)					
bit 7							bit 0

Legend:			
R = Readable bit	W = Writable bit	U = Unimplemented bit, read as ‘0’	
-n = Value at POR	‘1’ = Bit is set	‘0’ = Bit is cleared	x = Bit is unknown

bit 15-14 **Unimplemented:** Read as ‘0’

bit 13-8 **RP13R<5:0>:** Peripheral Output Function is Assigned to RP13 Output Pin bits(1)
(see Table 10-2 for peripheral function numbers)

bit 7-6 **Unimplemented:** Read as ‘0’

bit 5-0 **RP12R<5:0>:** Peripheral Output Function is Assigned to RP12 Output Pin bits(1)
(see Table 10-2 for peripheral function numbers)

Note 1: These bits are not implemented in dsPIC33FJ06GS001/101A devices.

REGISTER 10-23: RPOR7: PERIPHERAL PIN SELECT OUTPUT REGISTER 7

U-0	U-0	R/W-0	R/W-0	R/W-0	R/W-0	R/W-0	R/W-0
—	—	RP15R<5:0>(1)					
bit 15							bit 8

U-0	U-0	R/W-0	R/W-0	R/W-0	R/W-0	R/W-0	R/W-0
—	—	RP14R<5:0>(1)					
bit 7							bit 0

Legend:			
R = Readable bit	W = Writable bit	U = Unimplemented bit, read as ‘0’	
-n = Value at POR	‘1’ = Bit is set	‘0’ = Bit is cleared	x = Bit is unknown

bit 15-14 **Unimplemented:** Read as ‘0’

bit 13-8 **RP15R<5:0>:** Peripheral Output Function is Assigned to RP15 Output Pin bits(1)
(see Table 10-2 for peripheral function numbers)

bit 7-6 **Unimplemented:** Read as ‘0’

bit 5-0 **RP14R<5:0>:** Peripheral Output Function is Assigned to RP14 Output Pin bits(1)
(see Table 10-2 for peripheral function numbers)

Note 1: These bits are not implemented in dsPIC33FJ06GS001/101A devices.

REGISTER 10-24: RPOR16: PERIPHERAL PIN SELECT OUTPUT REGISTER 16

U-0	U-0	R/W-0	R/W-0	R/W-0	R/W-0	R/W-0	R/W-0
—	—	RP33R<5:0>					
bit 15							bit 8

U-0	U-0	R/W-0	R/W-0	R/W-0	R/W-0	R/W-0	R/W-0
—	—	RP32R<5:0>					
bit 7							bit 0

Legend:			
R = Readable bit	W = Writable bit	U = Unimplemented bit, read as ‘0’	
-n = Value at POR	‘1’ = Bit is set	‘0’ = Bit is cleared	x = Bit is unknown

bit 15-14 **Unimplemented:** Read as ‘0’

bit 13-8 **RP33R<5:0>:** Peripheral Output Function is Assigned to RP33 Output Pin bits (see Table 10-2 for peripheral function numbers)

bit 7-6 **Unimplemented:** Read as ‘0’

bit 5-0 **RP32R<5:0>:** Peripheral Output Function is Assigned to RP32 Output Pin bits (see Table 10-2 for peripheral function numbers)

REGISTER 10-25: RPOR17: PERIPHERAL PIN SELECT OUTPUT REGISTER 17

U-0	U-0	R/W-0	R/W-0	R/W-0	R/W-0	R/W-0	R/W-0
—	—	RP35R<5:0>					
bit 15							bit 8

U-0	U-0	R/W-0	R/W-0	R/W-0	R/W-0	R/W-0	R/W-0
—	—	RP34R<5:0>					
bit 7							bit 0

Legend:			
R = Readable bit	W = Writable bit	U = Unimplemented bit, read as ‘0’	
-n = Value at POR	‘1’ = Bit is set	‘0’ = Bit is cleared	x = Bit is unknown

bit 15-14 **Unimplemented:** Read as ‘0’

bit 13-8 **RP35R<5:0>:** Peripheral Output Function is Assigned to RP35 Output Pin bits (see Table 10-2 for peripheral function numbers)

bit 7-6 **Unimplemented:** Read as ‘0’

bit 5-0 **RP34R<5:0>:** Peripheral Output Function is Assigned to RP34 Output Pin bits (see Table 10-2 for peripheral function numbers)

© 2011-2012 Microchip Technology Inc.

11.0 TIMER1

Note 1: This data sheet summarizes the features of the dsPIC33FJ06GS001/101A/102A/202A and dsPIC33FJ09GS302 families of devices. It is not intended to be a comprehensive reference source. To complement the information in this data sheet, refer to **Section 11. "Timers"** (DS70205) in the *"dsPIC33F/PIC24H Family Reference Manual"*, which is available from the Microchip web site (www.microchip.com).

2: Some registers and associated bits described in this section may not be available on all devices. Refer to **Section 4.0 "Memory Organization"** in this data sheet for device-specific register and bit information.

The Timer1 module is a 16-bit timer, which can serve as a time counter for the Real-Time Clock (RTC) or operate as a free-running interval timer/counter.

The Timer1 module has the following unique features over other timers:

- Can be operated from the low-power 32 kHz crystal oscillator available on the device
- Can be operated in Asynchronous Counter mode from an external clock source
- The Timer1 External Clock Input (T1CK) can optionally be synchronized to the internal device clock and the clock synchronization is performed after the prescaler

The unique features of Timer1 allow it to be used for Real-Time Clock applications. A block diagram of Timer1 is shown in Figure 11-1.

The Timer1 module can operate in one of the following modes:

- Timer mode
- Gated Timer mode
- Synchronous Counter mode
- Asynchronous Counter mode

In Timer and Gated Timer modes, the input clock is derived from the internal instruction cycle clock (FCY). In Synchronous and Asynchronous Counter modes, the input clock is derived from the external clock input at the T1CK pin.

The Timer1 modes are determined by the following bits:

- Timer1 Clock Source Control bit: TCS (T1CON<1>)
- Timer1 Synchronization Control bit: TSYNC (T1CON<2>)
- Timer1 Gate Control bit: TGATE (T1CON<6>)

The Timer1 control bit settings for different operating modes are given in the Table 11-1.

TABLE 11-1: TIMER1 MODE SETTINGS

Mode	TCS	TGATE	TSYNC
Timer1	0	0	x
Gated Timer1	0	1	x
Synchronous Counter	1	x	1
Asynchronous Counter	1	x	0

FIGURE 11-1: 16-BIT TIMER1 MODULE BLOCK DIAGRAM

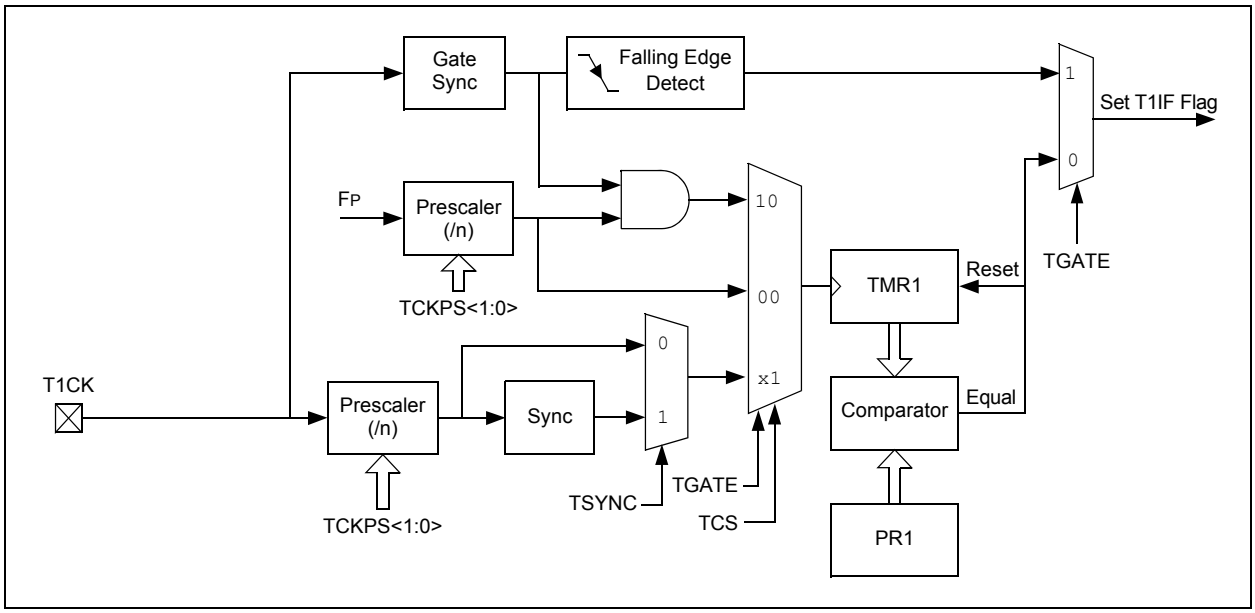

11.1 Timer1 Control Register

REGISTER 11-1: T1CON: TIMER1 CONTROL REGISTER

R/W-0	U-0	R/W-0	U-0	U-0	U-0	U-0	U-0
TON	—	TSIDL	—	—	—	—	—
bit 15							bit 8

U-0	R/W-0	R/W-0	R/W-0	U-0	R/W-0	R/W-0	U-0
—	TGATE	TCKPS<1:0>		—	TSYNC	TCS	—
bit 7							bit 0

Legend:			
R = Readable bit	W = Writable bit	U = Unimplemented bit, read as ‘0’	
-n = Value at POR	‘1’ = Bit is set	‘0’ = Bit is cleared	x = Bit is unknown

bit 15 **TON:** Timer1 On bit
1 = Starts 16-bit Timer1
0 = Stops 16-bit Timer1

bit 14 **Unimplemented:** Read as ‘0’

bit 13 **TSIDL:** Stop in Idle Mode bit
1 = Discontinues module operation when device enters Idle mode
0 = Continues module operation in Idle mode

bit 12-7 **Unimplemented:** Read as ‘0’

bit 6 **TGATE:** Timer1 Gated Time Accumulation Enable bit
When TCS = 1:
This bit is ignored.
When TCS = 0:
1 = Gated time accumulation is enabled
0 = Gated time accumulation is disabled

bit 5-4 **TCKPS<1:0>:** Timer1 Input Clock Prescale Select bits
11 = 1:256
10 = 1:64
01 = 1:8
00 = 1:1

bit 3 **Unimplemented:** Read as ‘0’

bit 2 **TSYNC:** Timer1 External Clock Input Synchronization Select bit
When TCS = 1:
1 = Synchronizes external clock input
0 = Does not synchronize external clock input
When TCS = 0:
This bit is ignored.

bit 1 **TCS:** Timer1 Clock Source Select bit
1 = External clock from T1CK pin (on the rising edge)
0 = Internal clock (FCY)

bit 0 **Unimplemented:** Read as ‘0’

© 2011-2012 Microchip Technology Inc.

12.0 TIMER2 FEATURES

Note 1: This data sheet summarizes the features of the dsPIC33FJ06GS001/101A/102A/202A and dsPIC33FJ09GS302 families of devices. It is not intended to be a comprehensive reference source. To complement the information in this data sheet, refer to **Section 11. "Timers"** (DS70205) in the *"dsPIC33F/PIC24H Family Reference Manual"*, which is available on the Microchip web site (www.microchip.com).

2: Some registers and associated bits described in this section may not be available on all devices. Refer to **Section 4.0 "Memory Organization"** in this data sheet for device-specific register and bit information.

Timer2 is a Type B timer with an external clock input (TxCK) that is always synchronized to the internal device clock and the clock synchronization is performed after the prescaler.

The Timer2 module can operate in one of the following modes:

- Timer mode
- Gated Timer mode
- Synchronous Counter mode

In Timer and Gated Timer modes, the input clock is derived from the internal instruction cycle clock (FCY). In Synchronous Counter mode, the input clock is derived from the external clock input at the TxCK pin.

The Timer modes are determined by the following bits:

- TCS (TxCON<1>): Timer Clock Source Control bit
- TGATE (TxCON<6>): Timer Gate Control bit

The Timer control bit settings for different operating modes are given in Table 12-1.

TABLE 12-1: TIMER MODE SETTINGS

Mode	TCS	TGATE
Timer	0	0
Gated Timer	0	1
Synchronous Counter	1	x

12.1 16-Bit Operation

To configure any of the timers for individual 16-bit operation:

1. Select the timer prescaler ratio using the TCKPS<1:0> bits.
2. Set the Clock and Gating modes using the TCS and TGATE bits.
3. Load the Timer Period value into the PRx register.
4. If interrupts are required, set the Timerx Interrupt Enable bit, TxIE. Use the priority bits, TxIP<2:0>, to set the interrupt priority.
5. Set the TON bit.

FIGURE 12-1: TYPE B TIMER BLOCK DIAGRAM (x = 2)

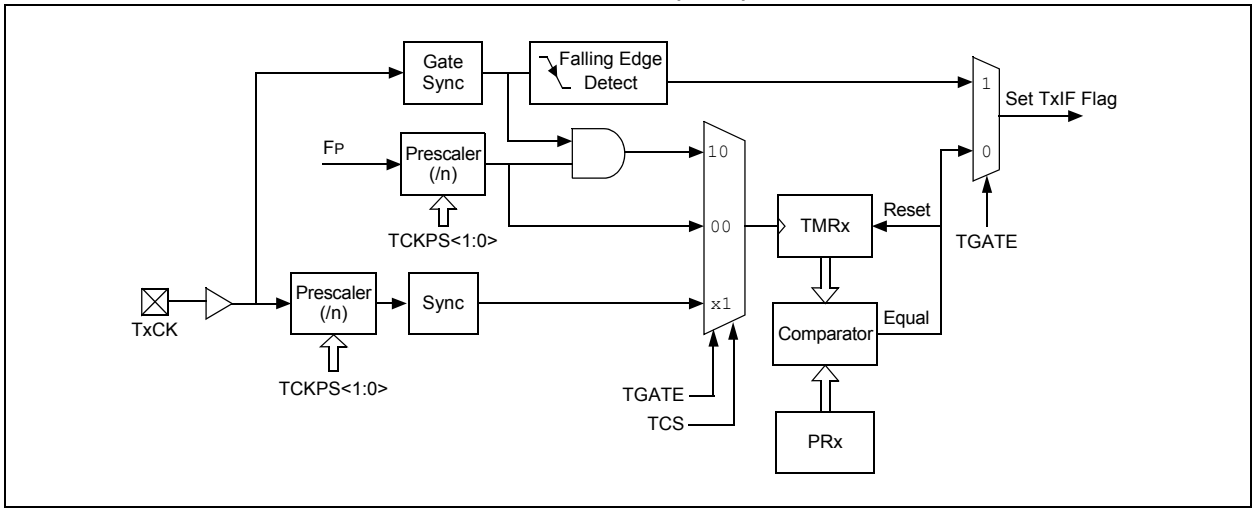

12.2 Timer2 Control Register

REGISTER 12-1: T2CON: TIMER2 CONTROL REGISTER

R/W-0	U-0	R/W-0	U-0	U-0	U-0	U-0	U-0
TON	—	TSIDL	—	—	—	—	—
bit 15							bit 8

U-0	R/W-0	R/W-0	R/W-0	U-0	U-0	R/W-0	U-0
—	TGATE	TCKPS<1:0>		—	—	TCS	—
bit 7							bit 0

Legend:			
R = Readable bit	W = Writable bit	U = Unimplemented bit, read as ‘0’	
-n = Value at POR	‘1’ = Bit is set	‘0’ = Bit is cleared	x = Bit is unknown

bit 15 **TON:** Timerx On bit
1 = Starts 16-bit timer
0 = Stops 16-bit timer

bit 14 **Unimplemented:** Read as ‘0’

bit 13 **TSIDL:** Stop in Idle Mode bit
1 = Discontinues timer operation when device enters Idle mode
0 = Continues timer operation in Idle mode

bit 12-7 **Unimplemented:** Read as ‘0’

bit 6 **TGATE:** Timerx Gated Time Accumulation Enable bit
When TCS = 1:
This bit is ignored.
When TCS = 0:
1 = Gated time accumulation is enabled
0 = Gated time accumulation is disabled

bit 5-4 **TCKPS<1:0>:** Timerx Input Clock Prescale Select bits
11 = 1:256 prescale value
10 = 1:64 prescale value
01 = 1:8 prescale value
00 = 1:1 prescale value

bit 3-2 **Unimplemented:** Read as ‘0’

bit 1 **TCS:** Timerx Clock Source Select bit
1 = External clock from T2CK pin
0 = Internal clock (FOSC/2)

bit 0 **Unimplemented:** Read as ‘0’

© 2011-2012 Microchip Technology Inc.

13.0 INPUT CAPTURE

Note 1: This data sheet summarizes the features of the dsPIC33FJ06GS001/101A/102A/202A and dsPIC33FJ09GS302 families of devices. It is not intended to be a comprehensive reference source. To complement the information in this data sheet, refer to **Section 12. "Input Capture"** (DS70198) in the *"dsPIC33F/PIC24H Family Reference Manual"*, which is available on the Microchip web site (www.microchip.com).

2: Some registers and associated bits described in this section may not be available on all devices. Refer to **Section 4.0 "Memory Organization"** in this data sheet for device-specific register and bit information.

The input capture module is useful in applications requiring frequency (period) and pulse measurement.

The input capture module captures the 16-bit value of the selected Time Base register when an event occurs at the IC1 pin. The events that cause a capture event are listed below in three categories:

- Simple Capture Event modes:
  - Capture timer value on every falling edge of input at IC1 pin
  - Capture timer value on every rising edge of input at IC1 pin
- Capture timer value on every edge (rising and falling)
- Prescaler Capture Event modes:
  - Capture timer value on every 4th rising edge of input at IC1 pin
  - Capture timer value on every 16th rising edge of input at IC1 pin

The input capture module uses the Timer2 module as its timer; however, it can use either an internal or external clock.

Other operational features include:

- Device wake-up from capture pin during CPU Sleep and Idle modes
- Interrupt on input capture event
- 4-word FIFO buffer for capture values:
  - Interrupt optionally generated after 1, 2, 3 or 4 buffer locations are filled
- Use of input capture to provide additional sources of external interrupts

FIGURE 13-1: INPUT CAPTURE BLOCK DIAGRAM

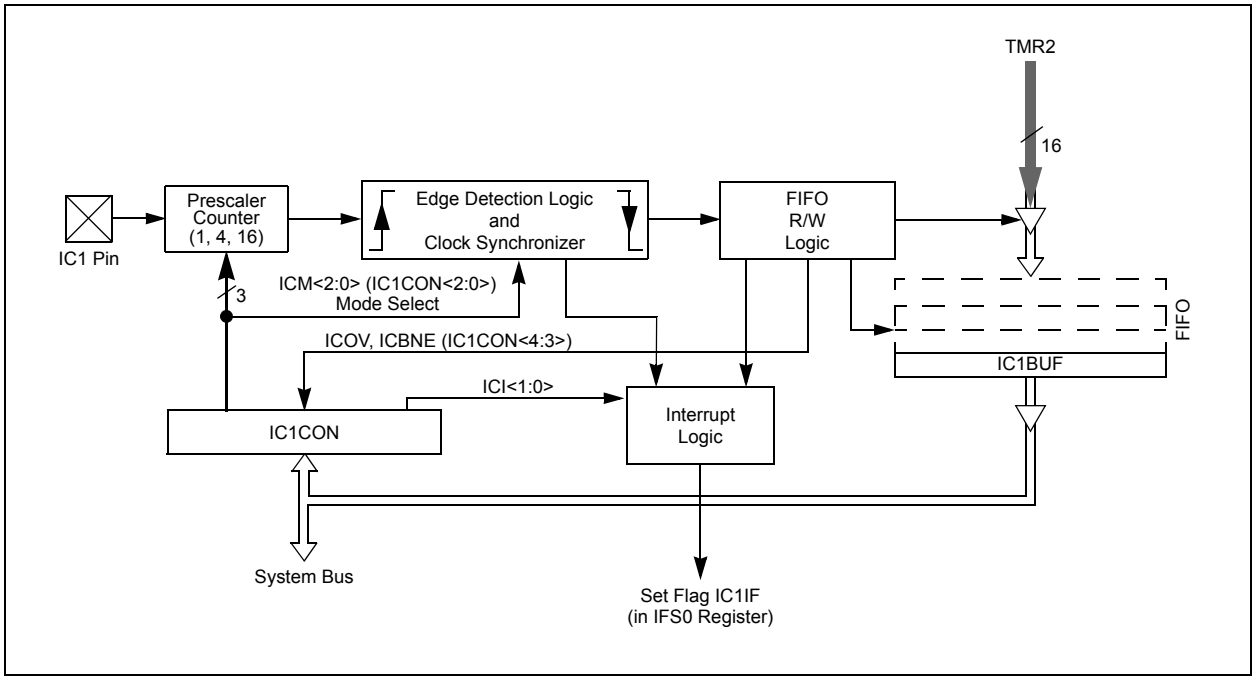

13.1 Input Capture Registers

REGISTER 13-1: IC1CON: INPUT CAPTURE 1 CONTROL REGISTER

U-0	U-0	R/W-0	U-0	U-0	U-0	U-0	U-0
—	—	ICSIDL	—	—	—	—	—
bit 15							bit 8

R/W-0	R/W-0	R/W-0	R-0, HC	R-0, HC	R/W-0	R/W-0	R/W-0
ICTMR[1]	ICI<1:0>		ICOV	ICBNE	ICM<2:0>		
bit 7							bit 0

Legend:	HC = Hardware Clearable bit		
R = Readable bit	W = Writable bit	U = Unimplemented bit, read as ‘0’	
-n = Value at POR	‘1’ = Bit is set	‘0’ = Bit is cleared	x = Bit is unknown

bit 15-14 **Unimplemented:** Read as ‘0’

bit 13 **ICSIDL:** Input Capture Module Stop in Idle Control bit
1 = Input capture module halts in CPU Idle mode
0 = Input capture module continues to operate in CPU Idle mode

bit 12-8 **Unimplemented:** Read as ‘0’

bit 7 **ICTMR:** Input Capture Timer Select bit[1]
1 = TMR2 contents are captured on capture event
0 = Reserved

bit 6-5 **ICI<1:0>:** Select Number of Captures per Interrupt bits
11 = Interrupt on every fourth capture event
10 = Interrupt on every third capture event
01 = Interrupt on every second capture event
00 = Interrupt on every capture event

bit 4 **ICOV:** Input Capture Overflow Status Flag bit (read-only)
1 = Input capture overflow occurred
0 = No input capture overflow occurred

bit 3 **ICBNE:** Input Capture Buffer Empty Status bit (read-only)
1 = Input capture buffer is not empty, at least one more capture value can be read
0 = Input capture buffer is empty

bit 2-0 **ICM<2:0>:** Input Capture Mode Select bits
111 = Input capture functions as interrupt pin only when device is in Sleep or Idle mode. Rising edge detect only; all other control bits are not applicable.
110 = Unused (module disabled)
101 = Capture mode, every 16th rising edge
100 = Capture mode, every 4th rising edge
011 = Capture mode, every rising edge
010 = Capture mode, every falling edge
001 = Capture mode, every edge (rising and falling). ICI<1:0> bits do not control interrupt generation for this mode.
000 = Input capture module is turned off

Note 1: This bit is not available in dsPIC33FJ06GS001/101A/102A devices.

© 2011-2012 Microchip Technology Inc.

14.0 OUTPUT COMPARE

Note 1: This data sheet summarizes the features of the dsPIC33FJ06GS001/101A/102A/202A and dsPIC33FJ09GS302 families of devices. It is not intended to be a comprehensive reference source. To complement the information in this data sheet, refer to **Section 13. "Output Compare"** (DS70209) in the *"dsPIC33F/PIC24H Family Reference Manual"*, which is available on the Microchip web site (www.microchip.com).

2: Some registers and associated bits described in this section may not be available on all devices. Refer to **Section 4.0 "Memory Organization"** in this data sheet for device-specific register and bit information.

The output compare module can select either Timer1 or Timer2 for its time base. The module compares the value of the timer with the value of one or two Compare registers, depending on the operating mode selected. The state of the output pin changes when the timer value matches the Output Compare register value. The output compare module generates either a single output pulse, or a sequence of output pulses, by changing the state of the output pin on the compare match events. The output compare module can also generate interrupts on compare match events.

The output compare module has multiple operating modes:

- Active-Low One-Shot mode
- Active-High One-Shot mode
- Toggle mode
- Delayed One-Shot mode
- Continuous Pulse mode
- PWM mode without Fault Protection
- PWM mode with Fault Protection

Note: The output compare module is not implemented in the dsPIC33FJ06GS001 device.

If a Fault condition is detected on the OCFA pin, the output pin(s) of the output compare module are placed in tri-state. The user may elect to use a pull-down or pull-up resistor on the PWM pin to provide for a desired state if a Fault condition occurs.

FIGURE 14-1: OUTPUT COMPARE MODULE BLOCK DIAGRAM

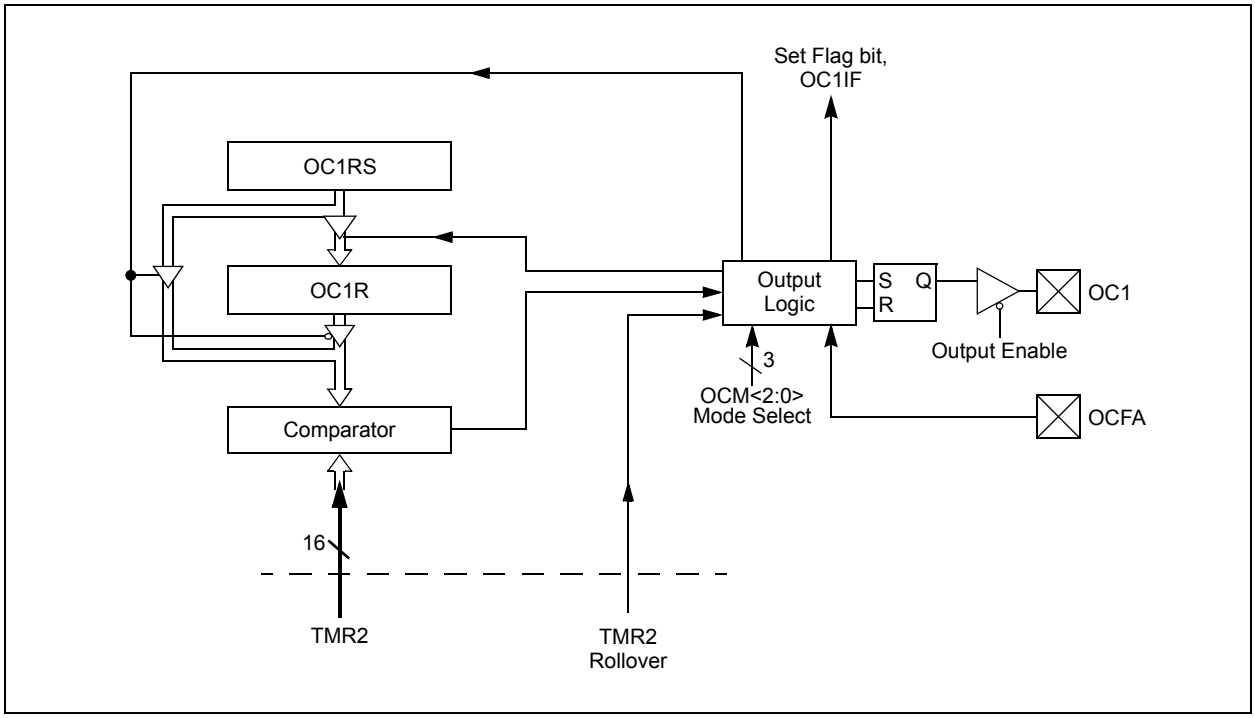

14.1 Output Compare Modes

Configure the Output Compare modes by setting the appropriate Output Compare Mode (OCM<2:0>) bits in the Output Compare Control (OC1CON<2:0>) register. Table 14-1 lists the different bit settings for the Output Compare modes. Figure 14-2 illustrates the output compare operation for various modes. The user application must disable the associated timer when writing to the Output Compare Control registers to avoid malfunctions.

> **Note:** Refer to **Section 13. "Output Compare"** (DS70209) in the *"dsPIC33F/PIC24H Family Reference Manual"* for OC1R and OC1RS register restrictions.

TABLE 14-1: OUTPUT COMPARE MODES

OCM<2:0>	Mode	OC1 Pin Initial State	OC1 Interrupt Generation
000	Module Disabled	Controlled by GPIO register	—
001	Active-Low One-Shot	0	OC1 rising edge
010	Active-High One-Shot	1	OC1 falling edge
011	Toggle	Current output is maintained	OC1 rising and falling edge
100	Delayed One-Shot	0	OC1 falling edge
101	Continuous Pulse	0	OC1 falling edge
110	PWM without Fault Protection	'0' if OC1R is zero, '1' if OC1R is non-zero	No interrupt
111	PWM with Fault Protection	'0' if OC1R is zero, '1' if OC1R is non-zero	OCFA falling edge for OC1 to OC4

FIGURE 14-2: OUTPUT COMPARE OPERATION

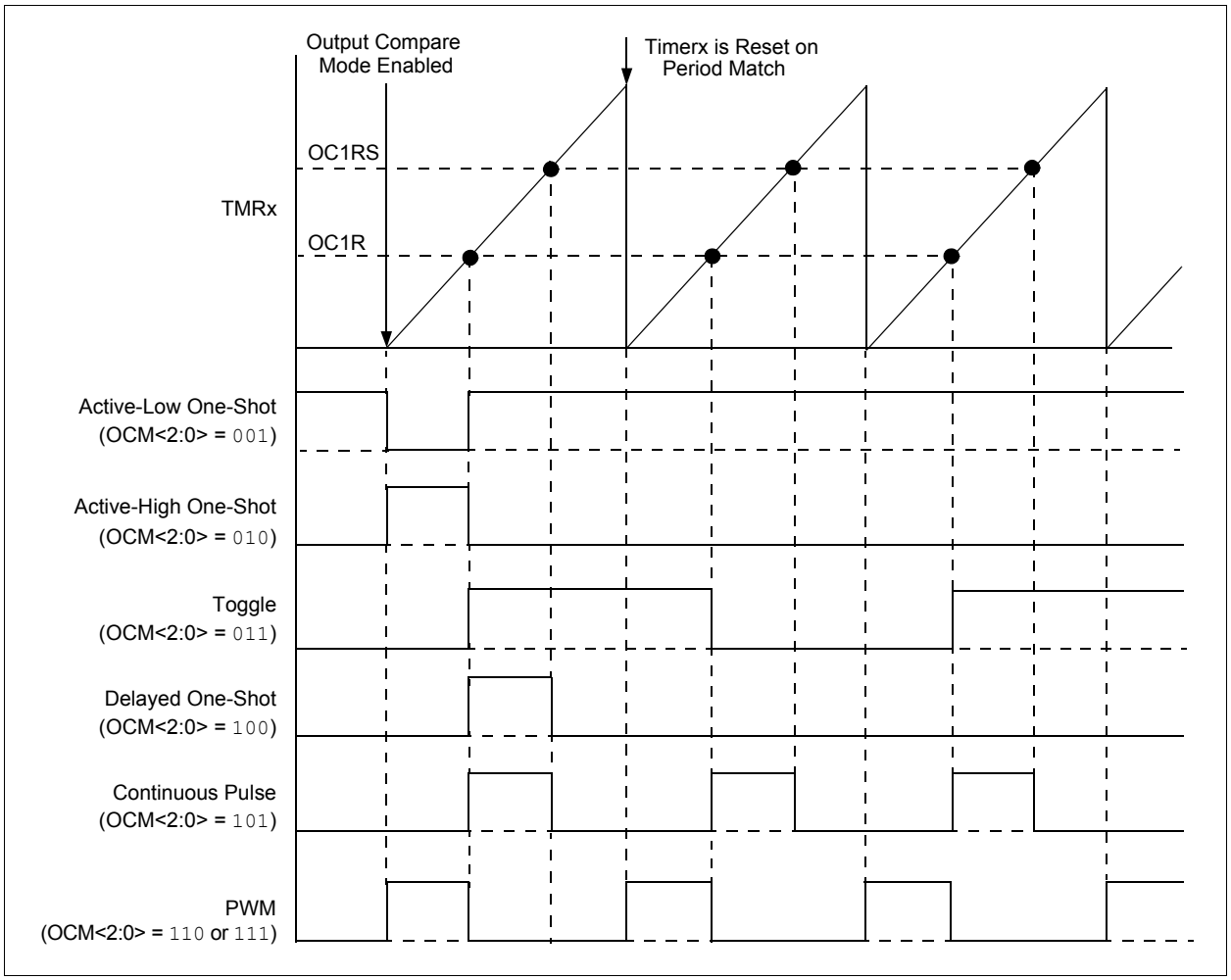

© 2011-2012 Microchip Technology Inc.

14.2 Output Compare Control Registers

REGISTER 14-1: OC1CON: OUTPUT COMPARE 1 CONTROL REGISTER

U-0	U-0	R/W-0	U-0	U-0	U-0	U-0	U-0
—	—	OCSIDL	—	—	—	—	—
bit 15							bit 8

U-0	U-0	U-0	R-0, HC	U-0	R/W-0	R/W-0	R/W-0
—	—	—	OCFLT	—	OCM<2:0>		
bit 7							bit 0

Legend:	HC = Hardware Clearable bit		
R = Readable bit	W = Writable bit	U = Unimplemented bit, read as ‘0’	
-n = Value at POR	‘1’ = Bit is set	‘0’ = Bit is cleared	x = Bit is unknown

bit 15-14 **Unimplemented:** Read as ‘0’

bit 13 **OCSIDL:** Stop Output Compare in Idle Mode Control bit
1 = Output Compare 1 halts in CPU Idle mode
0 = Output Compare 1 continues to operate in CPU Idle mode

bit 12-5 **Unimplemented:** Read as ‘0’

bit 4 **OCFLT:** PWM Fault Condition Status bit
1 = PWM Fault condition has occurred (cleared in hardware only)
0 = No PWM Fault condition has occurred (this bit is only used when OCM<2:0> = 111)

bit 3 **Unimplemented:** Read as ‘0’

bit 2-0 **OCM<2:0>:** Output Compare Mode Select bits
111 = PWM mode on OC1, Fault pin is enabled
110 = PWM mode on OC1, Fault pin is disabled
101 = Initializes OC1 pin low, generates continuous output pulses on OC1 pin
100 = Initializes OC1 pin low, generates single output pulse on OC1 pin
011 = Compare event toggles OC1 pin
010 = Initializes OC1 pin high, compare event forces OC1 pin low
001 = Initializes OC1 pin low, compare event forces OC1 pin high
000 = Output compare channel is disabled

NOTES:

© 2011-2012 Microchip Technology Inc.

15.0 HIGH-SPEED PWM

Note 1: This data sheet summarizes the features of the dsPIC33FJ06GS001/101A/102A/202A and dsPIC33FJ09GS302 families of devices. It is not intended to be a comprehensive reference source. To complement the information in this data sheet, refer to **Section 43. "High-Speed PWM"** (DS70323) in the *"dsPIC33F/PIC24H Family Reference Manual"*, which is available on the Microchip web site (www.microchip.com).

2: Some registers and associated bits described in this section may not be available on all devices. Refer to **Section 4.0 "Memory Organization"** in this data sheet for device-specific register and bit information.

The high-speed PWM module supports a wide variety of PWM modes and output formats. This PWM module is ideal for power conversion applications, such as:

- AC/DC Converters
- DC/DC Converters
- Power Factor Correction (PFC)
- Uninterruptible Power Supply (UPS)
- Inverters
- Battery Chargers
- Digital Lighting

15.1 Features Overview

The high-speed PWM module incorporates the following features:

- Two to three PWM generators with four to six outputs
- Individual time base and duty cycle for each of the six PWM outputs
- Dead time for rising and falling edges:
- Duty cycle resolution of 1.04 ns(1,2)
- Dead-time resolution of 1.04 ns(1,2)
- Phase-shift resolution of 1.04 ns(1,2)
- Frequency resolution of 1.04 ns(1,2)

Note 1: Resolution is 8.32 ns in Center-Aligned PWM mode.

2: Resolution is 8.32 ns for dsPIC33FJ06GS001 devices.

- Supported PWM modes:
  - Standard Edge-Aligned
  - True Independent Output
  - Complementary
  - Center-Aligned
  - Push-Pull
  - Multiphase
  - Variable Phase
  - Fixed Off Time
  - Current Reset
  - Current Limit
- Independent Fault/Current-Limit inputs for each of the six PWM outputs
- Output override control
- Special Event Trigger
- PWM capture feature
- Prescaler for input clock
- Dual trigger from PWM to ADC
- PWMxH, PWMxL output pin swapping
- Remappable PWM4H, PWM4L pins
- On-the-fly PWM frequency, duty cycle and phase-shift changes
- Disabling of individual PWM generators to reduce power consumption
- Leading-Edge Blanking (LEB) functionality
- PWM output chopping (see **Note 1**)

Note 1: The chopping function performs a logical AND of the PWM outputs with a very high-frequency clock signal. The chopping frequency is typically hundreds or thousands of time higher in frequency, as compared to the PWM frequency. Chopping a PWM signal constrains the use of a pulse transformer to cross the isolation barrier.

Figure 15-1 conceptualizes the PWM module in a simplified block diagram. Figure 15-2 illustrates how the module hardware is partitioned for each PWM output pair for the Complementary PWM mode. Each functional unit of the PWM module is discussed in subsequent sections.

The PWM module contains three PWM generators. The module has up to six PWM output pins: PWM1H, PWM1L, PWM2H, PWM2L, PWM4H and PWM4L. For complementary outputs, these six I/O pins are grouped into H/L pairs.

15.2 Feature Description

The PWM module is designed for applications that require:

- High-resolution at high PWM frequencies
- The ability to drive Standard, Edge-Aligned, Center-Aligned Complementary mode, and Push-Pull mode outputs
- The ability to create multiphase PWM outputs

For Center-Aligned mode, the duty cycle, period, phase and dead-time resolutions will be 8.32 ns.

Two common, medium power converter topologies are push-pull and half-bridge. These designs require the PWM output signal to be switched between alternate pins, as provided by the Push-Pull PWM mode.

A phase-shifted PWM describes the situation where each PWM generator provides outputs, but the phase relationship between the generator outputs is specifiable and changeable.

A multiphase PWM is often used to improve DC/DC Converter load transient response, and reduce the size of output filter capacitors and inductors. Multiple DC/DC Converters are often operated in parallel, but phase-shifted in time. A single PWM output, operating at 250 kHz, has a period of 4 μs, but an array of four PWM channels staggered by 1 μs each, yields an effective switching frequency of 1 MHz. Multiphase PWM applications typically use a fixed-phase relationship.

A variable phase PWM is useful in Zero Voltage Transition (ZVT) power converters. Here, the PWM duty cycle is always 50%, and the power flow is controlled by varying the relative phase-shift between the two PWM generators.

© 2011-2012 Microchip Technology Inc.

FIGURE 15-1: SIMPLIFIED CONCEPTUAL BLOCK DIAGRAM OF HIGH-SPEED PWM

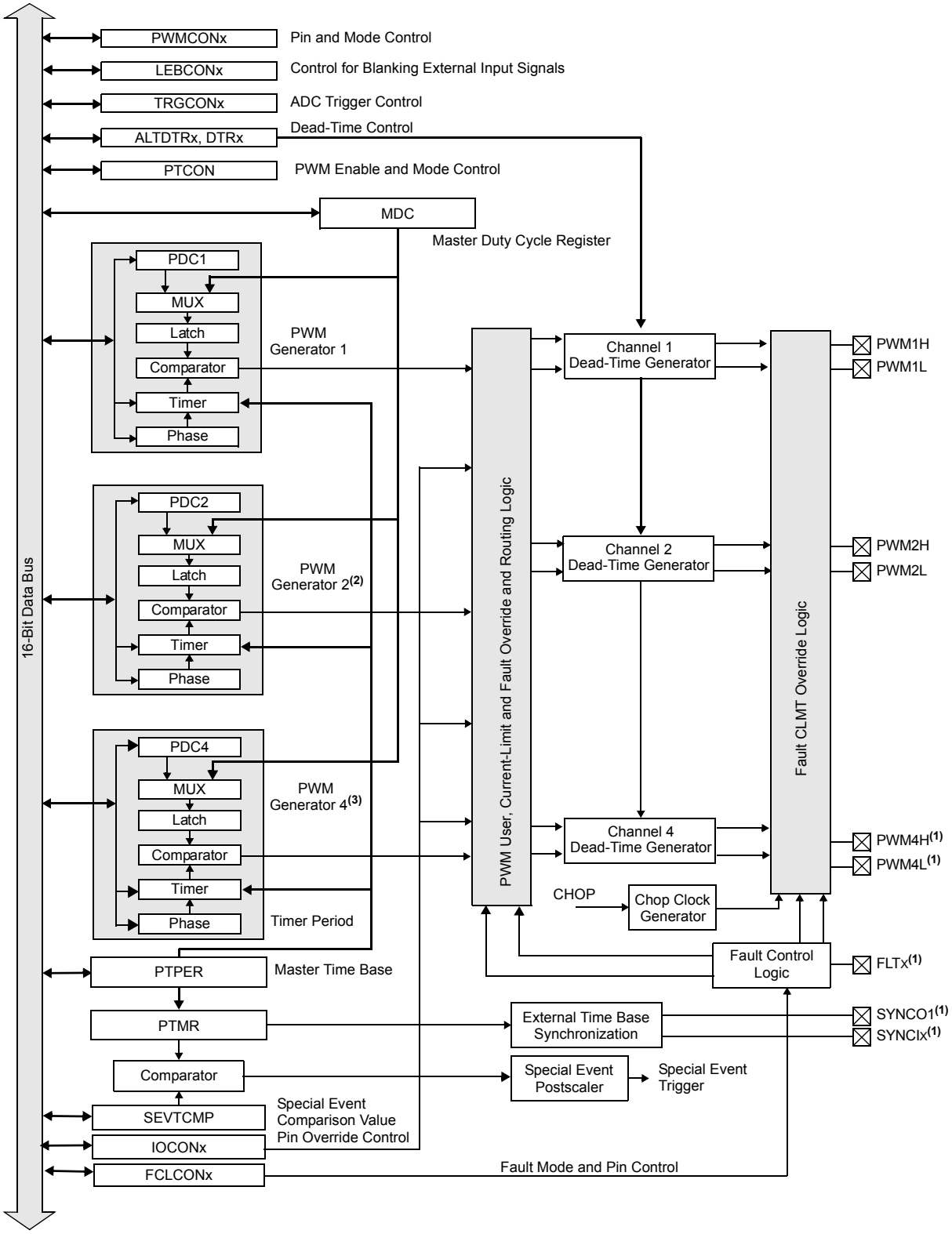

Note 1: These pins are remappable.

2: This PWM generator is not available in dsPIC33FJ06GS001/101A devices.

3: This PWM generator is only available in dsPIC33FJ06GS001/101A and dsPIC33FJ09GS302A devices.

FIGURE 15-2: PARTITIONED OUTPUT PAIR, COMPLEMENTARY PWM MODE

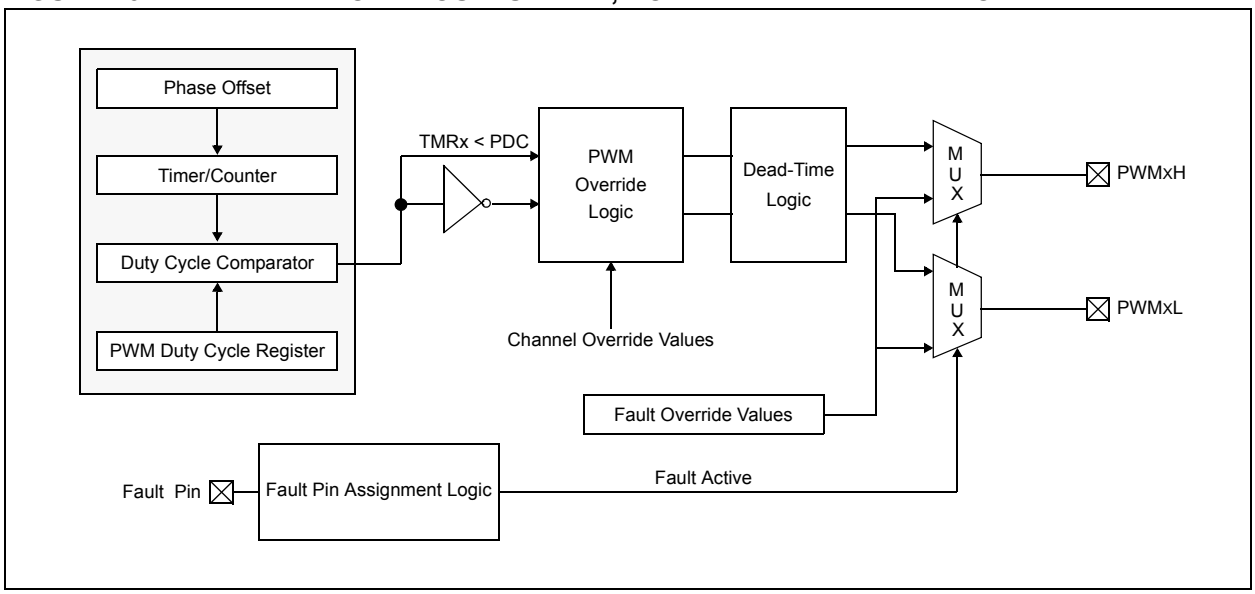

15.3 PWM Control Registers

The following registers control the operation of the high-speed PWM module.

- PTCON: PWM Time Base Control Register
- PTCON2: PWM Clock Divider Select Register 2
- PTPER: PWM Master Time Base Register(1)
- SEVTCMP: PWM Special Event Compare Register
- MDC: PWM Master Duty Cycle Register
- PWMCONx: PWMx Control Register
- PDCx: PWMx Generator Duty Cycle Register(1)
- PHASEx: PWMx Primary Phase Shift Register
- DTRx: PWMx Dead-Time Register
- ALTDTRx: PWMx Alternate Dead-Time Register
- SDCx: PWMx Secondary Duty Cycle Register(1)
- SPHASEx: PWMx Secondary Phase Shift Register
- TRGCONx: PWMx Trigger Control Register
- IOCONx: PWMx I/O Control Register
- FCLCONx: PWMx Fault Current-Limit Control Register
- TRIGx: PWMx Primary Trigger Compare Value Register
- STRIGx: PWMx Secondary Trigger Compare Value Register
- LEBCONx: PWMx Leading-Edge Blanking Control Register
- PWMCAPx: Primary PWMx Time Base Capture Register
- CHOP: PWM Chop Clock Generator Register
- AUXCONx: PWMx Auxiliary Control Register

© 2011-2012 Microchip Technology Inc.

REGISTER 15-1: PTCON: PWM TIME BASE CONTROL REGISTER

R/W-0	U-0	R/W-0	HS/HC-0	R/W-0	R/W-0	R/W-0	R/W-0
PTEN	—	PTSIDL	SESTAT	SEIEN	EIPU(1)	SYNCPOL(1)	SYNCOEN(1)
bit 15							bit 8

R/W-0	U-0	R/W-0	R/W-0	R/W-0	R/W-0	R/W-0	R/W-0
SYNCEN(1)	—	SYNCSRC<1:0>(1)		SEVTPS<3:0>(1)			
bit 7							bit 0

Legend:	HC = Hardware Clearable bit	HS = Hardware Settable bit	
R = Readable bit	W = Writable bit	U = Unimplemented bit, read as ‘0’	
-n = Value at POR	‘1’ = Bit is set	‘0’ = Bit is cleared	x = Bit is unknown

bit 15 **PTEN:** PWM Module Enable bit
1 = PWM module is enabled
0 = PWM module is disabled

bit 14 **Unimplemented:** Read as ‘0’

bit 13 **PTSIDL:** PWM Time Base Stop in Idle Mode bit
1 = PWM time base halts in CPU Idle mode
0 = PWM time base runs in CPU Idle mode

bit 12 **SESTAT:** Special Event Interrupt Status bit
1 = Special event interrupt is pending
0 = Special event interrupt is not pending

bit 11 **SEIEN:** Special Event Interrupt Enable bit
1 = Special event interrupt is enabled
0 = Special event interrupt is disabled

bit 10 **EIPU:** Enable Immediate Period Updates bit(1)
1 = Active Period register is updated immediately
0 = Active Period register updates occur on PWM cycle boundaries

bit 9 **SYNCPOL:** Synchronization Input/Output Polarity bit(1)
1 = SYNCIx and SYNCO1 polarity is inverted (active-low)
0 = SYNCIx and SYNCO1 are active-high

bit 8 **SYNCOEN:** Primary Time Base Sync Enable bit(1)
1 = SYNCO1 output is enabled
0 = SYNCO1 output is disabled

bit 7 **SYNCEN:** External Time Base Synchronization Enable bit(1)
1 = External synchronization of primary time base is enabled
0 = External synchronization of primary time base is disabled

bit 6 **Unimplemented:** Read as ‘0’

bit 5-4 **SYNCSRC<1:0>:** Synchronous Source Selection bits(1)
11 = Reserved
10 = Reserved
01 = SYNCI2
00 = SYNCI1

bit 3-0 **SEVTPS<3:0>:** PWM Special Event Trigger Output Postscaler Select bits(1)
1111 = 1:16 Postscaler generates a Special Event Trigger on every sixteenth compare match event
•
•
•
0001 = 1:2 Postscaler generates a Special Event Trigger on every second compare match event
0000 = 1:1 Postscaler generates a Special Event Trigger on every compare match event

Note 1: These bits should be changed only when PTEN = 0. In addition, when using the SYNCIx feature, the user application must program the Period register with a value that is slightly larger than the expected period of the external synchronization input signal.

REGISTER 15-2: PTCON2: PWM CLOCK DIVIDER SELECT REGISTER 2

U-0	U-0	U-0	U-0	U-0	U-0	U-0	U-0
—	—	—	—	—	—	—	—
bit 15							bit 8

U-0	U-0	U-0	U-0	U-0	R/W-0	R/W-0	R/W-0
—	—	—	—	—	PCLKDIV<2:0>(1)		
bit 7							bit 0

Legend:			
R = Readable bit	W = Writable bit	U = Unimplemented bit, read as ‘0’	
-n = Value at POR	‘1’ = Bit is set	‘0’ = Bit is cleared	x = Bit is unknown

bit 15-3 **Unimplemented:** Read as ‘0’

bit 2-0 **PCLKDIV<2:0>:** PWM Input Clock Prescaler (Divider) Select bits(1)
- 111 = Reserved
- 110 = Divide-by-64, maximum PWM timing resolution
- 101 = Divide-by-32, maximum PWM timing resolution
- 100 = Divide-by-16, maximum PWM timing resolution
- 011 = Divide-by-8, maximum PWM timing resolution
- 010 = Divide-by-4, maximum PWM timing resolution
- 001 = Divide-by-2, maximum PWM timing resolution
- 000 = Divide-by-1, maximum PWM timing resolution (power-on default)

Note 1: These bits should be changed only when PTEN = 0. Changing the clock selection during operation will yield unpredictable results.

REGISTER 15-3: PTPER: PWM MASTER TIME BASE REGISTER(1)

R/W-1	R/W-1	R/W-1	R/W-1	R/W-1	R/W-1	R/W-1	R/W-1
PTPER <15:8>							
bit 15							bit 8

R/W-1	R/W-1	R/W-1	R/W-1	R/W-1	R/W-0	R/W-0	R/W-0
PTPER <7:0>							
bit 7							bit 0

Legend:			
R = Readable bit	W = Writable bit	U = Unimplemented bit, read as ‘0’	
-n = Value at POR	‘1’ = Bit is set	‘0’ = Bit is cleared	x = Bit is unknown

bit 15-0 **PTPER<15:0>:** PWM Master Time Base (PMTMR) Period Value bits

Note 1: The minimum value that can be loaded into the PTPER register is 0x0010 and the maximum value is 0xFFF8.

© 2011-2012 Microchip Technology Inc.

REGISTER 15-4: SEVTCMP: PWM SPECIAL EVENT COMPARE REGISTER

R/W-0	R/W-0	R/W-0	R/W-0	R/W-0	R/W-0	R/W-0	R/W-0
SEVTCMP <15:8>							
bit 15							bit 8

R/W-0	R/W-0	R/W-0	R/W-0	R/W-0	U-0	U-0	U-0
SEVTCMP <7:3>					—	—	—
bit 7							bit 0

Legend:			
R = Readable bit	W = Writable bit	U = Unimplemented bit, read as ‘0’	
-n = Value at POR	‘1’ = Bit is set	‘0’ = Bit is cleared	x = Bit is unknown

bit 15-3 **SEVTCMP<15:3>:** Special Event Compare Count Value bits

bit 2-0 **Unimplemented:** Read as ‘0’

REGISTER 15-5: MDC: PWM MASTER DUTY CYCLE REGISTER

R/W-0	R/W-0	R/W-0	R/W-0	R/W-0	R/W-0	R/W-0	R/W-0
MDC<15:8>(1,2)							
bit 15							bit 8

R/W-0	R/W-0	R/W-0	R/W-0	R/W-0	R/W-0	R/W-0	R/W-0
MDC<7:0>(1,2)							
bit 7							bit 0

Legend:			
R = Readable bit	W = Writable bit	U = Unimplemented bit, read as ‘0’	
-n = Value at POR	‘1’ = Bit is set	‘0’ = Bit is cleared	x = Bit is unknown

bit 15-0 **MDC<15:0>:** Master PWM Duty Cycle Value bits(1,2)

Note 1: The smallest pulse width that can be generated on the PWM output corresponds to a value of 0x0009, while the maximum pulse width generated corresponds to a value of Period – 0x0008.

2: As the duty cycle gets closer to 0% or 100% of the PWM period (0 ns-40 ns, depending on the mode of operation), the PWM duty cycle resolution will degrade from 1 LSb to 3 LSbs.

REGISTER 15-6: PWMCONx: PWMx CONTROL REGISTER

HS/HC-0	HS/HC-0	HS/HC-0	R/W-0	R/W-0	R/W-0	R/W-0	R/W-0
FLTSTAT(1)	CLSTAT(1)	TRGSTAT	FLTIEN	CLIEN	TRGIEN	ITB(3)	MDCS(3)
bit 15							bit 8

R/W-0	R/W-0	U-0	U-0	U-0	R/W-0	R/W-0	R/W-0
DTC<1:0>		—	—	—	CAM(2,3)	XPRES(4)	IUE
bit 7							bit 0

Legend:	HC = Hardware Clearable bit	HS = Hardware Settable bit	
R = Readable bit	W = Writable bit	U = Unimplemented bit, read as ‘0’	
-n = Value at POR	‘1’ = Bit is set	‘0’ = Bit is cleared	x = Bit is unknown

bit 15 **FLTSTAT:** Fault Interrupt Status bit(1)
1 = Fault interrupt is pending
0 = No Fault interrupt is pending; this bit is cleared by setting FLTIEN = 0

bit 14 **CLSTAT:** Current-Limit Interrupt Status bit(1)
1 = Current-limit interrupt is pending
0 = No current-limit interrupt is pending; this bit is cleared by setting CLIEN = 0

bit 13 **TRGSTAT:** Trigger Interrupt Status bit
1 = Trigger interrupt is pending
0 = No trigger interrupt is pending; this bit is cleared by setting TRGIEN = 0

bit 12 **FLTIEN:** Fault Interrupt Enable bit
1 = Fault interrupt is enabled
0 = Fault interrupt is disabled and the FLTSTAT bit is cleared

bit 11 **CLIEN:** Current-Limit Interrupt Enable bit
1 = Current-limit interrupt is enabled
0 = Current-limit interrupt is disabled and the CLSTAT bit is cleared

bit 10 **TRGIEN:** Trigger Interrupt Enable bit
1 = A trigger event generates an interrupt request
0 = Trigger event interrupts are disabled and the TRGSTAT bit is cleared

bit 9 **ITB:** Independent Time Base Mode bit(3)
1 = PHASEx/SPHASEx register provides time base period for this PWM generator
0 = PTPER register provides timing for this PWM generator

bit 8 **MDCS:** Master Duty Cycle Register Select bit(3)
1 = MDC register provides duty cycle information for this PWM generator
0 = PDCx/SDCx register provides duty cycle information for this PWM generator

bit 7-6 **DTC<1:0>:** Dead-Time Control bits
11 = Reserved
10 = Dead-time function is disabled
01 = Negative dead time actively applied for all output modes
00 = Positive dead time actively applied for all output modes

bit 5-3 **Unimplemented:** Read as ‘0’

Note 1: Software must clear the interrupt status here and the corresponding IFSx bit in the interrupt controller.

2: The Independent Time Base mode (ITB = 1) must be enabled to use Center-Aligned mode. If ITB = 0, the CAM bit is ignored.

3: These bits should be changed only when PTEN = 0. Changing the clock selection during operation will yield unpredictable results.

4: To operate in External Period Reset mode, configure the CLMOD (FCLCONx<8>) bit = 0 and ITB (PWMCONx<9>) bit = 1.

© 2011-2012 Microchip Technology Inc.

REGISTER 15-6: PWMCONx: PWMx CONTROL REGISTER (CONTINUED)

bit 2 **CAM:** Center-Aligned Mode Enable bit(2,3)
1 = Center-Aligned mode is enabled
0 = Center-Aligned mode is disabled

bit 1 **XPRES:** External PWM Reset Control bit(4)
1 = Current-limit source resets time base for this PWM generator if it is in Independent Time Base mode
0 = External pins do not affect PWM time base

bit 0 **IUE:** Immediate Update Enable bit
1 = Updates to the active MDC/PDCx/SDCx registers are immediate
0 = Updates to the active MDC/PDCx/SDCx registers are synchronized to the PWM time base

Note 1: Software must clear the interrupt status here and the corresponding IFSx bit in the interrupt controller.

2: The Independent Time Base mode (ITB = 1) must be enabled to use Center-Aligned mode. If ITB = 0, the CAM bit is ignored.

3: These bits should be changed only when PTEN = 0. Changing the clock selection during operation will yield unpredictable results.

4: To operate in External Period Reset mode, configure the CLMOD (FCLCONx<8>) bit = 0 and ITB (PWMCONx<9>) bit = 1.

REGISTER 15-7: PDCx: PWMx GENERATOR DUTY CYCLE REGISTER(1)

R/W-0	R/W-0	R/W-0	R/W-0	R/W-0	R/W-0	R/W-0	R/W-0
PDCx<15:8>(2)							
bit 15							bit 8

R/W-0	R/W-0	R/W-0	R/W-0	R/W-0	R/W-0	R/W-0	R/W-0
PDCx<7:0>(2)							
bit 7							bit 0

Legend:			
R = Readable bit	W = Writable bit	U = Unimplemented bit, read as ‘0’	
-n = Value at POR	‘1’ = Bit is set	‘0’ = Bit is cleared	x = Bit is unknown

bit 15-0 **PDCx<15:0>:** PWMx Generator # Duty Cycle Value bits(2)

Note 1: In Independent PWM mode, the PDCx register controls the PWMxH duty cycle only. In Complementary, Redundant and Push-Pull PWM modes, the PDCx register controls the duty cycle of both the PWMxH and PWMxL. The smallest pulse width that can be generated on the PWM output corresponds to a value of 0x0009, while the maximum pulse width generated corresponds to a value of Period-0x0008.

2: As the duty cycle gets closer to 0% or 100% of the PWM period (0 ns-40 ns, depending on the mode of operation), the PWM duty cycle resolution will degrade from 1 LSB to 3 LSBs.

REGISTER 15-8: SDCx: PWMx SECONDARY DUTY CYCLE REGISTER(1)

R/W-0	R/W-0	R/W-0	R/W-0	R/W-0	R/W-0	R/W-0	R/W-0
SDCx<15:8>(2)							
bit 15							bit 8

R/W-0	R/W-0	R/W-0	R/W-0	R/W-0	R/W-0	R/W-0	R/W-0
SDCx<7:0>(2)							
bit 7							bit 0

Legend:			
R = Readable bit	W = Writable bit	U = Unimplemented bit, read as ‘0’	
-n = Value at POR	‘1’ = Bit is set	‘0’ = Bit is cleared	x = Bit is unknown

bit 15-0 **SDCx<15:0>:** Secondary Duty Cycle for PWMxL Output Pin bits(2)

Note 1: The SDCx register is used in Independent PWM mode only. When used in Independent PWM mode, the SDCx register controls the PWMxL duty cycle. The smallest pulse width that can be generated on the PWM output corresponds to a value of 0x0009, while the maximum pulse width generated corresponds to a value of Period-0x0008.

2: As the duty cycle gets closer to 0% or 100% of the PWM period (0 ns-40 ns, depending on the mode of operation), the PWM duty cycle resolution will degrade from 1 LSB to 3 LSBs.

© 2011-2012 Microchip Technology Inc.

REGISTER 15-9: PHASEx: PWMx PRIMARY PHASE SHIFT REGISTER

R/W-0	R/W-0	R/W-0	R/W-0	R/W-0	R/W-0	R/W-0	R/W-0
PHASEx<15:8>(1,2)							
bit 15							bit 8

R/W-0	R/W-0	R/W-0	R/W-0	R/W-0	R/W-0	R/W-0	R/W-0
PHASEx<7:0>(1,2)							
bit 7							bit 0

Legend:			
R = Readable bit	W = Writable bit	U = Unimplemented bit, read as ‘0’	
-n = Value at POR	‘1’ = Bit is set	‘0’ = Bit is cleared	x = Bit is unknown

bit 15-0 **PHASEx<15:0>:** PWMx Phase Shift Value or Independent Time Base Period for PWM Generator bits(1,2)

Note 1: If the ITB (PWMCONx<9>) bit = 0, the following applies based on the mode of operation:
- Complementary, Redundant and Push-Pull Output mode (PMOD<1:0> (IOCONx<11:10>) = 00, 01 or 10), PHASEx<15:0> = Phase shift value for PWMxH and PWMxL outputs.
- True Independent Output mode PMOD<1:0> (IOCONx<11:10>) = 11), PHASEx<15:0> = Phase shift value for PWMxL only.

2: If the ITB (PWMCONx<9>) bit = 1, the following applies based on the mode of operation:
- Complementary, Redundant and Push-Pull Output mode (PMOD<1:0> (IOCONx<11:10>) = 00, 01 or 10), PHASEx<15:0> = Independent time base period value for PWMxH and PWMxL.
- True Independent Output mode PMOD<1:0> (IOCONx<11:10>) = 11), PHASEx<15:0> = Independent time base period value for PWMxL only.
- The smallest pulse width that can be generated on the PWM output corresponds to a value of 0x0008, while the maximum pulse width generated corresponds to a value of Period-0x0008.

REGISTER 15-10: SPHASEx: PWMx SECONDARY PHASE SHIFT REGISTER

R/W-0	R/W-0	R/W-0	R/W-0	R/W-0	R/W-0	R/W-0	R/W-0
SPHASEx<15:8>(1,2)							
bit 15							bit 8

R/W-0	R/W-0	R/W-0	R/W-0	R/W-0	R/W-0	R/W-0	R/W-0
SPHASEx<7:0>(1,2)							
bit 7							bit 0

Legend:			
R = Readable bit	W = Writable bit	U = Unimplemented bit, read as ‘0’	
-n = Value at POR	‘1’ = Bit is set	‘0’ = Bit is cleared	x = Bit is unknown

bit 15-0 **SPHASEx<15:0>:** Secondary Phase Offset for PWMxL Output Pin bits(1,2) (used in Independent PWM mode only)

Note 1: If the ITB (PWMCONx<9>) bit = `0`, the following applies based on the mode of operation:
- Complementary, Redundant and Push-Pull Output mode (PMOD<1:0> (IOCONx<11:10>) = `00`, `01` or `10`), SPHASEx<15:0> = Not used.
- True Independent Output mode PMOD<1:0> (IOCONx<11:10>) = `11`), PHASEx<15:0> = Phase shift value for PWMxL only.

2: If the ITB (PWMCONx<9>) bit = `1`, the following applies based on the mode of operation:
- Complementary, Redundant and Push-Pull Output mode (PMOD<1:0> (IOCONx<11:10>) = `00`, `01` or `10`), SPHASEx<15:0> = Not used.
- True Independent Output mode PMOD<1:0> (IOCONx<11:10>) = `11`), PHASEx<15:0> = Independent time base period value for PWMxL only.

© 2011-2012 Microchip Technology Inc.

REGISTER 15-11: DTRx: PWMx DEAD-TIME REGISTER

U-0	U-0	R/W-0	R/W-0	R/W-0	R/W-0	R/W-0	R/W-0
—	—	DTRx<13:8>					
bit 15							bit 8

R/W-0	R/W-0	R/W-0	R/W-0	R/W-0	R/W-0	R/W-0	R/W-0
DTRx<7:0>							
bit 7							bit 0

Legend:			
R = Readable bit	W = Writable bit	U = Unimplemented bit, read as ‘0’	
-n = Value at POR	‘1’ = Bit is set	‘0’ = Bit is cleared	x = Bit is unknown

bit 15-14 **Unimplemented:** Read as ‘0’

bit 13-0 **DTRx<13:0>:** Unsigned 14-Bit Dead-Time Value for PWMx Dead-Time Unit bits

REGISTER 15-12: ALTDTRx: PWMx ALTERNATE DEAD-TIME REGISTER

U-0	U-0	R/W-0	R/W-0	R/W-0	R/W-0	R/W-0	R/W-0
—	—	ALTDTRx<13:8>					
bit 15							bit 8

R/W-0	R/W-0	R/W-0	R/W-0	R/W-0	R/W-0	R/W-0	R/W-0
ALTDTR <7:0>							
bit 7							bit 0

Legend:			
R = Readable bit	W = Writable bit	U = Unimplemented bit, read as ‘0’	
-n = Value at POR	‘1’ = Bit is set	‘0’ = Bit is cleared	x = Bit is unknown

bit 15-14 **Unimplemented:** Read as ‘0’

bit 13-0 **ALTDTRx<13:0>:** Unsigned 14-Bit Dead-Time Value for PWMx Dead-Time Unit bits

REGISTER 15-13: TRGCONx: PWMx TRIGGER CONTROL REGISTER

R/W-0	R/W-0	R/W-0	R/W-0	U-0	U-0	U-0	U-0
TRGDIV<3:0>				—	—	—	—
bit 15							bit 8

R/W-0	U-0	R/W-0	R/W-0	R/W-0	R/W-0	R/W-0	R/W-0
DTM(1)	—	TRGSTRT<5:0>					
bit 7							bit 0

Legend:			
R = Readable bit	W = Writable bit	U = Unimplemented bit, read as ‘0’	
-n = Value at POR	‘1’ = Bit is set	‘0’ = Bit is cleared	x = Bit is unknown

bit 15-12 **TRGDIV<3:0>:** Trigger # Output Divider bits

1111 = Trigger output for every 16th trigger event
1110 = Trigger output for every 15th trigger event
1101 = Trigger output for every 14th trigger event
1100 = Trigger output for every 13th trigger event
1011 = Trigger output for every 12th trigger event
1010 = Trigger output for every 11th trigger event
1001 = Trigger output for every 10th trigger event
1000 = Trigger output for every 9th trigger event
0111 = Trigger output for every 8th trigger event
0110 = Trigger output for every 7th trigger event
0101 = Trigger output for every 6th trigger event
0100 = Trigger output for every 5th trigger event
0011 = Trigger output for every 4th trigger event
0010 = Trigger output for every 3rd trigger event
0001 = Trigger output for every 2nd trigger event
0000 = Trigger output for every trigger event

bit 11-8 **Unimplemented:** Read as ‘0’

bit 7 **DTM:** Dual Trigger Mode bit(1)

1 = Secondary trigger event is combined with the primary trigger event to create the PWM trigger.
0 = Secondary trigger event is not combined with the primary trigger event to create the PWM trigger; two separate PWM triggers are generated

bit 6 **Unimplemented:** Read as ‘0’

bit 5-0 **TRGSTRT<5:0>:** Trigger Postscaler Start Enable Select bits

111111 = Wait 63 PWM cycles before generating the first trigger event after the module is enabled
•
•
•
000010 = Wait 2 PWM cycles before generating the first trigger event after the module is enabled
000001 = Wait 1 PWM cycle before generating the first trigger event after the module is enabled
000000 = Wait 0 PWM cycle before generating the first trigger event after the module is enabled

Note 1: The secondary generator cannot generate PWM trigger interrupts.

© 2011-2012 Microchip Technology Inc.

REGISTER 15-14: IOCONx: PWMx I/O CONTROL REGISTER

R/W-0	R/W-0	R/W-0	R/W-0	R/W-0	R/W-0	R/W-0	R/W-0
PENH	PENL	POLH	POLL	PMOD<1:0>(1)		OVRENH	OVRENL
bit 15							bit 8

R/W-0	R/W-0	R/W-0	R/W-0	R/W-0	R/W-0	R/W-0	R/W-0
OVRDAT<1:0>		FLTDAT<1:0>(2)		CLDAT<1:0>(2)		SWAP	OSYNC
bit 7							bit 0

Legend:			
R = Readable bit	W = Writable bit	U = Unimplemented bit, read as ‘0’	
-n = Value at POR	‘1’ = Bit is set	‘0’ = Bit is cleared	x = Bit is unknown

bit 15 **PENH:** PWMxH Output Pin Ownership bit
1 = PWM module controls PWMxH pin
0 = GPIO module controls PWMxH pin

bit 14 **PENL:** PWMxL Output Pin Ownership bit
1 = PWM module controls PWMxL pin
0 = GPIO module controls PWMxL pin

bit 13 **POLH:** PWMxH Output Pin Polarity bit
1 = PWMxH pin is active-low
0 = PWMxH pin is active-high

bit 12 **POLL:** PWMxL Output Pin Polarity bit
1 = PWMxL pin is active-low
0 = PWMxL pin is active-high

bit 11-10 **PMOD<1:0>:** PWMx I/O Pin Mode bits(1)
11 = PWM I/O pin pair is in the True Independent Output mode
10 = PWM I/O pin pair is in the Push-Pull Output mode
01 = PWM I/O pin pair is in the Redundant Output mode
00 = PWM I/O pin pair is in the Complementary Output mode

bit 9 **OVRENH:** Override Enable for PWMxH Pin bit
1 = OVRDAT<1> provides data for output on PWMxH pin
0 = PWM generator provides data for PWMxH pin

bit 8 **OVRENL:** Override Enable for PWMxL Pin bit
1 = OVRDAT<0> provides data for output on PWMxL pin
0 = PWM generator provides data for PWMxL pin

bit 7-6 **OVRDAT<1:0>:** Data for PWMxH and PWMxL Pins if Override is Enabled bits
If OVERENH = 1 then OVRDAT<1> provides data for PWMxH.
If OVERENL = 1 then OVRDAT<0> provides data for PWMxL.

bit 5-4 **FLTDAT<1:0>:** State for PWMxH and PWMxL Pins if FLTMOD is Enabled bits(2)
IFLTMOD (FCLCONx<15>) = 0, Normal Fault mode:
If Fault is active, then FLTDAT<1> provides the state for PWMxH.
If Fault is active, then FLTDAT<0> provides the state for PWMxL.
IFLTMOD (FCLCONx<15>) = 1, Independent Fault mode:
If current-limit is active, then FLTDAT<1> provides the state for PWMxH.
If Fault is active, then FLTDAT<0> provides the state for PWMxL.

Note 1: These bits should be changed only when PTEN = 0. Changing the clock selection during operation will yield unpredictable results.

2: State represents the active/inactive state of the PWM module depending on the POLH and POLL bit settings.

REGISTER 15-14: IOCONx: PWMx I/O CONTROL REGISTER (CONTINUED)

bit 3-2 **CLDAT<1:0>:** State for PWMxH and PWMxL Pins if CLMODE is Enabled bits(2)

IFLTMOD (FCLCONx<15>) = 0, Normal Fault mode:
If current-limit is active, then CLDAT<1> provides the state for PWMxH.
If current-limit is active, then CLDAT<0> provides the state for PWMxL.

IFLTMOD (FCLCONx<15>) = 1, Independent Fault mode:
CLDAT<1:0> is ignored.

bit 1 **SWAP<1:0>:** SWAP PWMxH and PWMxL pins

1 = PWMxH output signal is connected to PWMxL pin and PWMxL signal is connected to PWMxH pins
0 = PWMxH and PWMxL pins are mapped to their respective pins

bit 0 **OSYNC:** Output Override Synchronization bit

1 = Output overrides via the OVRDAT<1:0> bits are synchronized to the PWM time base
0 = Output overrides via the OVRDAT<1:0> bits occur on next CPU clock boundary

Note 1: These bits should be changed only when PTEN = 0. Changing the clock selection during operation will yield unpredictable results.

2: State represents the active/inactive state of the PWM module depending on the POLH and POLL bit settings.

© 2011-2012 Microchip Technology Inc.

REGISTER 15-15: FCLCONx: PWMx FAULT CURRENT-LIMIT CONTROL REGISTER

R/W-0	R/W-0	R/W-0	R/W-0	R/W-0	R/W-0	R/W-0	R/W-0
IFLTMOD	CLSRC<4:0>(2,3)					CLPOL(1)	CLMOD
bit 15							bit 8

R/W-0	R/W-0	R/W-0	R/W-0	R/W-0	R/W-0	R/W-0	R/W-0
FLTSRC<4:0>(2,3)					FLTPOL(1)	FLTMOD<1:0>	
bit 7							bit 0

Legend:			
R = Readable bit	W = Writable bit	U = Unimplemented bit, read as ‘0’	
-n = Value at POR	‘1’ = Bit is set	‘0’ = Bit is cleared	x = Bit is unknown

bit 15 **IFLTMOD:** Independent Fault Mode Enable bit
1 = Independent Fault mode: Current-limit input maps FLTDAT<1> to PWMxH output and Fault input maps FLTDAT<0> to PWMxL output. The CLDAT<1:0> bits are not used for override functions.
0 = Normal Fault mode: Current-limit feature maps CLDAT<1:0> bits to the PWMxH and PWMxL outputs. The PWM Fault feature maps FLTDAT<1:0> to the PWMxH and PWMxL outputs.

bit 14-10 **CLSRC<4:0>:** Current-Limit Control Signal Source Select for PWMx # Generator bits(2,3)
11111 = Reserved
•
•
•
01000 = Reserved

00111 = Fault 8
00110 = Fault 7
00101 = Fault 6
00100 = Fault 5
00011 = Fault 4
00010 = Fault 3
00001 = Fault 2
00000 = Fault 1

bit 9 **CLPOL:** Current-Limit Polarity for PWMx Generator # bit(1)
1 = The selected current-limit source is active-low
0 = The selected current-limit source is active-high

bit 8 **CLMOD:** Current-Limit Mode Enable bit for PWMx Generator # bit
1 = Current-limit function is enabled
0 = Current-limit function is disabled

Note 1: These bits should be changed only when PTEN = 0. Changing the clock selection during operation will yield unpredictable results.

2: When Independent Fault mode is enabled (IFLTMOD<1:0> = 1), and Fault 1 is used for Current-Limit mode (CLSRC<4:0> = b0000), the Fault Control Source Select bits (FLTSRC<4:0>) should be set to an unused Fault source to prevent Fault 1 from disabling both the PWMxL and PWMxH outputs.

3: When Independent Fault mode is enabled (IFLTMOD<1:0> = 1) and Fault 1 is used for Fault mode (FLTSRC<4:0> = b0000), the Current-Limit Control Source Select bits (CLSRC<4:0>) should be set to an unused current-limit source to prevent the current-limit source from disabling both the PWMxH and PWMxL outputs.

REGISTER 15-15: FCLCONx: PWMx FAULT CURRENT-LIMIT CONTROL REGISTER (CONTINUED)

bit 7-3 **FLTSRC<4:0>:** Fault Control Signal Source Select for PWM Generator # bits[2,3]

11111 = Reserved
•
•
•
01000 = Reserved

00111 = Fault 8
00110 = Fault 7
00101 = Fault 6
00100 = Fault 5
00011 = Fault 4
00010 = Fault 3
00001 = Fault 2
00000 = Fault 1

bit 2 **FLTPOL:** Fault Polarity for PWMx Generator # bit[1]

1 = The selected Fault source is active-low
0 = The selected Fault source is active-high

bit 1-0 **FLTMOD<1:0>:** Fault Mode for PWMx Generator # bits

11 = Fault input is disabled
10 = Reserved
01 = The selected Fault source forces PWMxH, PWMxL pins to FLTDAT values (cycle)
00 = The selected Fault source forces PWMxH, PWMxL pins to FLTDAT values (latched condition)

Note 1: These bits should be changed only when PTEN = 0. Changing the clock selection during operation will yield unpredictable results.

2: When Independent Fault mode is enabled (IFLTMOD<1:0> = 1), and Fault 1 is used for Current-Limit mode (CLSRC<4:0> = b0000), the Fault Control Source Select bits (FLTSRC<4:0>) should be set to an unused Fault source to prevent Fault 1 from disabling both the PWMxL and PWMxH outputs.

3: When Independent Fault mode is enabled (IFLTMOD<1:0> = 1) and Fault 1 is used for Fault mode (FLTSRC<4:0> = b0000), the Current-Limit Control Source Select bits (CLSRC<4:0>) should be set to an unused current-limit source to prevent the current-limit source from disabling both the PWMxH and PWMxL outputs.

© 2011-2012 Microchip Technology Inc.

REGISTER 15-16: TRIGx: PWMx PRIMARY TRIGGER COMPARE VALUE REGISTER

R/W-0	R/W-0	R/W-0	R/W-0	R/W-0	R/W-0	R/W-0	R/W-0
TRGCMP<15:8>							
bit 15							bit 8

R/W-0	R/W-0	R/W-0	R/W-0	R/W-0	U-0	U-0	U-0
TRGCMP<7:3>					—	—	—
bit 7							bit 0

Legend:			
R = Readable bit	W = Writable bit	U = Unimplemented bit, read as ‘0’	
-n = Value at POR	‘1’ = Bit is set	‘0’ = Bit is cleared	x = Bit is unknown

bit 15-3 **TRGCMP<15:3>:** Trigger Control Value bits
When primary PWM functions in local time base, this register contains the compare values that can trigger the ADC module.

bit 2-0 **Unimplemented:** Read as ‘0’

REGISTER 15-17: STRIGx: PWMx SECONDARY TRIGGER COMPARE VALUE REGISTER

R/W-0	R/W-0	R/W-0	R/W-0	R/W-0	R/W-0	R/W-0	R/W-0
STRGCMP<15:8>							
bit 15							bit 8

R/W-0	R/W-0	R/W-0	R/W-0	R/W-0	U-0	U-0	U-0
STRGCMP<7:3>					—	—	—
bit 7							bit 0

Legend:			
R = Readable bit	W = Writable bit	U = Unimplemented bit, read as ‘0’	
-n = Value at POR	‘1’ = Bit is set	‘0’ = Bit is cleared	x = Bit is unknown

bit 15-3 **STRGCMP<15:3>:** Secondary Trigger Control Value bits
When secondary PWM functions in local time base, this register contains the compare values that can trigger the ADC module.

bit 2-0 **Unimplemented:** Read as ‘0’

REGISTER 15-18: LEBCONx: PWMx LEADING-EDGE BLANKING CONTROL REGISTER

R/W-0	R/W-0	R/W-0	R/W-0	R/W-0	R/W-0	R/W-0	R/W-0
PHR	PHF	PLR	PLF	FLTLEBEN	CLLEBEN	LEB<6:5>	
bit 15							bit 8

R/W-0	R/W-0	R/W-0	R/W-0	R/W-0	U-0	U-0	U-0
LEB<4:0>					—	—	—
bit 7							bit 0

Legend:			
R = Readable bit	W = Writable bit	U = Unimplemented bit, read as ‘0’	
-n = Value at POR	‘1’ = Bit is set	‘0’ = Bit is cleared	x = Bit is unknown

bit 15 **PHR:** PWMxH Rising Edge Trigger Enable bit
1 = Rising edge of PWMxH will trigger LEB counter
0 = LEB ignores rising edge of PWMxH

bit 14 **PHF:** PWMxH Falling Edge Trigger Enable bit
1 = Falling edge of PWMxH will trigger LEB counter
0 = LEB ignores falling edge of PWMxH

bit 13 **PLR:** PWMxL Rising Edge Trigger Enable bit
1 = Rising edge of PWMxL will trigger LEB counter
0 = LEB ignores rising edge of PWMxL

bit 12 **PLF:** PWMxL Falling Edge Trigger Enable bit
1 = Falling edge of PWMxL will trigger LEB counter
0 = LEB ignores falling edge of PWMxL

bit 11 **FLTLEBEN:** Fault Input LEB Enable bit
1 = Leading-edge blanking is applied to selected Fault input
0 = Leading-edge blanking is not applied to selected Fault input

bit 10 **CLLEBEN:** Current-Limit LEB Enable bit
1 = Leading-edge blanking is applied to selected current-limit input
0 = Leading-edge blanking is not applied to selected current-limit input

bit 9-3 **LEB<6:0>:** Leading-Edge Blanking for Current-Limit and Fault Inputs bits
The value is 8.32 nsec increments.

bit 2-0 **Unimplemented:** Read as ‘0’

© 2011-2012 Microchip Technology Inc.

REGISTER 15-19: PWMCAPx: PRIMARY PWMx TIME BASE CAPTURE REGISTER

R-0	R-0	R-0	R-0	R-0	R-0	R-0	R-0
PWMCAP<15:8>(1,2)							
bit 15							bit 8

R-0	R-0	R-0	R-0	R-0	U-0	U-0	U-0
PWMCAP<7:3>(1,2)					—	—	—
bit 7							bit 0

Legend:			
R = Readable bit	W = Writable bit	U = Unimplemented bit, read as ‘0’	
-n = Value at POR	‘1’ = Bit is set	‘0’ = Bit is cleared	x = Bit is unknown

bit 15-3 **PWMCAP<15:3>:** Captured PWM Time Base Value bits(1,2)
The value in this register represents the captured PWM time base value when a leading edge is detected on the current-limit input.

bit 2-0 **Unimplemented:** Read as ‘0’

Note 1: The capture feature is only available on primary output (PWMxH).
2: This feature is active only after LEB processing on the current-limit input signal is complete.

REGISTER 15-20: CHOP: PWM CHOP CLOCK GENERATOR REGISTER

R/W-0	U-0	U-0	U-0	U-0	U-0	R/W-0	R/W-0
CHPCLKEN	—	—	—	—	—	CHOPCLK<6:5>	
bit 15							bit 8

R/W-0	R/W-0	R/W-0	R/W-0	R/W-0	U-0	U-0	U-0
CHOPCLK<4:0>					—	—	—
bit 7							bit 0

Legend:			
R = Readable bit	W = Writable bit	U = Unimplemented bit, read as ‘0’	
-n = Value at POR	‘1’ = Bit is set	‘0’ = Bit is cleared	x = Bit is unknown

bit 15 **CHPCLKEN:** Enable Chop Clock Generator bit
1 = Chop clock generator is enabled
0 = Chop clock generator is disabled

bit 14-10 **Unimplemented:** Read as ‘0’

bit 9-3 **CHOPCLK<6:0>:** Chop Clock Divider bits
The frequency of the chop clock signal is given by the following expression:
Chop Frequency = 1/(16.64 * (CHOPCLK<6:0> + 1) * Primary Master PWM Input Clock/PCLKDIV<2:0>)

bit 2-0 **Unimplemented:** Read as ‘0’

REGISTER 15-21: AUXCONx: PWMx AUXILIARY CONTROL REGISTER

R/W-0	R/W-0	U-0	U-0	U-0	U-0	U-0	UW-0
HRPDIS	HRDDIS	—	—	—	—	—	—
bit 15							bit 8

U-0	U-0	R/W-0	R/W-0	R/W-0	R/W-0	R/W-0	R/W-0
—	—	CHOPSEL<3:0>				CHOPHEN	CHOPLEN
bit 7							bit 0

Legend:			
R = Readable bit	W = Writable bit	U = Unimplemented bit, read as ‘0’	
-n = Value at POR	‘1’ = Bit is set	‘0’ = Bit is cleared	x = Bit is unknown

bit 15 **HRPDIS:** High-Resolution PWMx Period Disable bit
1 = High-resolution PWMx period is enabled
0 = High-resolution PWMx period is disabled

bit 14 **HRDDIS:** High-Resolution PWMx Duty Cycle Disable bit
1 = High-resolution PWMx duty cycle is enabled
0 = High-resolution PWMx duty cycle is disabled

bit 13-6 **Unimplemented:** Read as ‘0’

bit 5-2 **CHOPSEL<3:0>:** PWMx Chop Clock Source Select bits
The selected signal will enable and disable (CHOP) the selected PWMx outputs.
1001 = Reserved
1000 = Reserved
0111 = Reserved
0110 = Reserved
0101 = Reserved
0100 = PWM4H is selected as CHOP clock source
0011 = Reserved
0010 = PWM2H is selected as CHOP clock source
0001 = PWM1H is selected as CHOP clock source
0000 = Chop clock generator is selected as CHOP clock source

bit 1 **CHOPHEN:** PWMxH Output Chopping Enable bit
1 = PWMxH chopping function is enabled
0 = PWMxH chopping function is disabled

bit 0 **CHOPLEN:** PWMxL Output Chopping Enable bit
1 = PWMxL chopping function is enabled
0 = PWMxL chopping function is disabled

© 2011-2012 Microchip Technology Inc.

16.0 SERIAL PERIPHERAL INTERFACE (SPI)

Note 1: This data sheet summarizes the features of the dsPIC33FJ06GS001/101A/102A/202A and dsPIC33FJ09GS302 family of devices. It is not intended to be a comprehensive reference source. To complement the information in this data sheet, refer to **Section 18. "Serial Peripheral Interface (SPI)"** (DS70206) of the "*dsPIC33F/PIC24H Family Reference Manual*", which is available from the Microchip web site (www.microchip.com).

2: Some registers and associated bits described in this section may not be available on all devices. Refer to **Section 4.0 "Memory Organization"** in this data sheet for device-specific register and bit information.

The Serial Peripheral Interface (SPI) module is a synchronous serial interface useful for communicating with other peripheral or microcontroller devices. These peripheral devices can be serial EEPROMs, shift registers, display drivers, Analog-to-Digital Converters, etc. The SPI module is compatible with Motorola® SPI and SIOP.

Each SPI module consists of a 16-bit shift register, SPIxSR (where x = 1 or 2), used for shifting data in and out, and a buffer register, SPIxBUF. A control register, SPIxCON, configures the module. Additionally, a status register, SPIxSTAT, indicates status conditions.

The serial interface consists of 4 pins:

- SDIx (serial data input)
- SDOx (serial data output)
- SCKx (shift clock input or output)
- $\overline{\text{SSx}}$ (active-low slave select)

In Master mode operation, SCKx is a clock output; in Slave mode, it is a clock input.

FIGURE 16-1: SPI MODULE BLOCK DIAGRAM

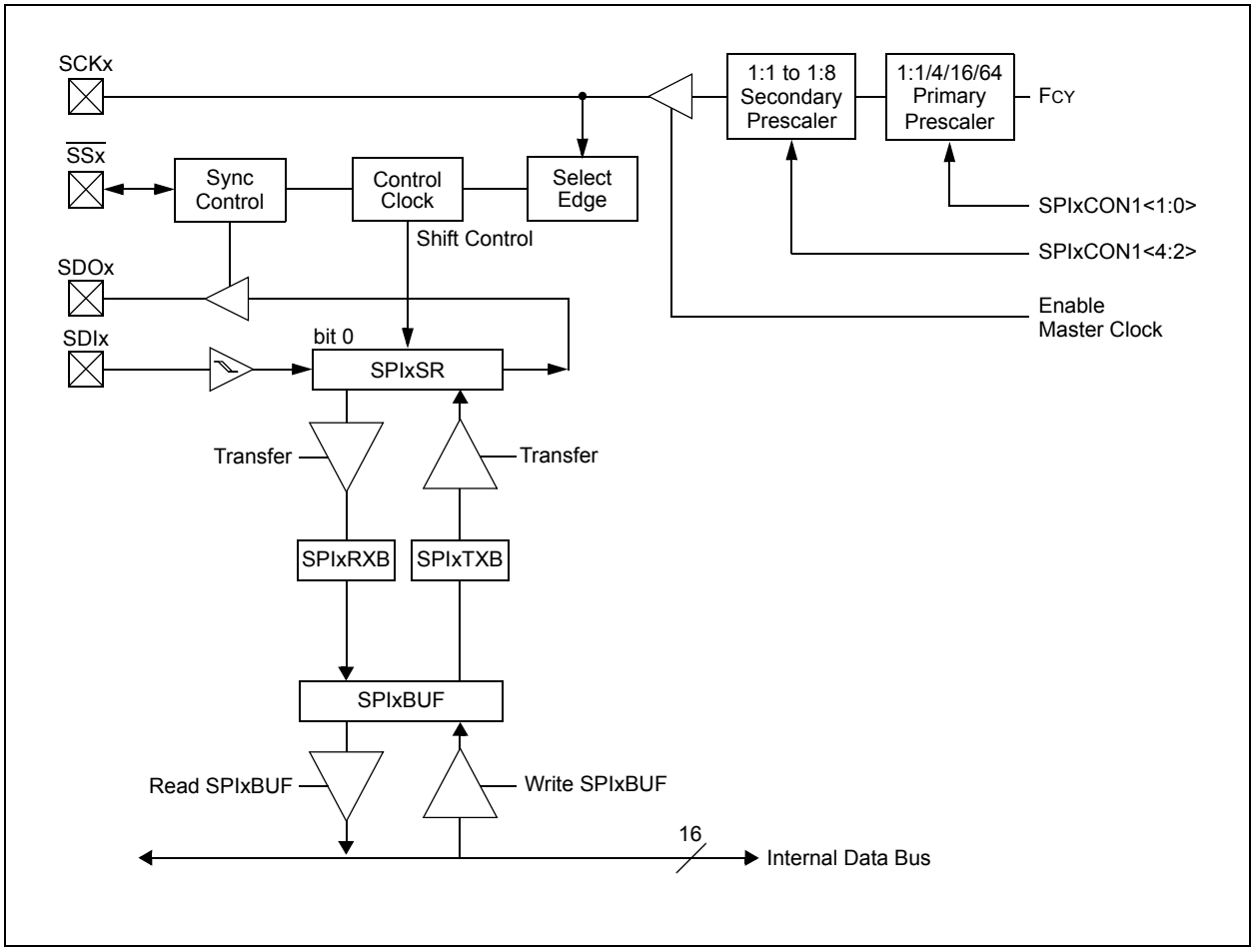

16.1 SPI Helpful Tips

1. In Frame mode, if there is a possibility that the master may not be initialized before the slave:
   a) If FRMPOL (SPIxCON2<13>) = 1, use a pull-down resistor on SSx.
   b) If FRMPOL = 0, use a pull-up resistor on SSx.

Note:	This insures that the first frame transmission after initialization is not shifted or corrupted.

2. In Non-Framed 3-Wire mode, (i.e., not using SSx from a master):
   a) If CKP (SPIxCON1<6>) = 1, always place a pull-up resistor on SSx.
   b) If CKP = 0, always place a pull-down resistor on SSx.

Note:	This will insure that during power-up and initialization the master/slave will not lose Sync due to an errant SCK transition that would cause the slave to accumulate data shift errors for both transmit and receive appearing as corrupted data.

3. FRMEN (SPIxCON2<15>) = 1 and SSEN (SPIxCON1<7>) = 1 are exclusive and invalid. In Frame mode, SCKx is continuous and the Frame Sync pulse is active on the SSx pin, which indicates the start of a data frame.

Note:	Not all third-party devices support Frame mode timing. Refer to the SPI electrical characteristics for details.

4. In Master mode only, set the SMP bit (SPIxCON1<9>) to a '1' for the fastest SPI data rate possible. The SMP bit can only be set at the same time or after the MSTEN bit (SPIxCON1<5>) is set.

To avoid invalid slave read data to the master, the user's master software must ensure enough time for slave software to fill its write buffer before the user application initiates a master write/read cycle. It is always advisable to preload the SPIxBUF Transmit register in advance of the next master transaction cycle. SPIxBUF is transferred to the SPI Shift register and is empty once the data transmission begins.

16.2 SPI Resources

Many useful resources related to SPI are provided on the Microchip web site (www.microchip.com).

16.2.1 KEY RESOURCES

- **Section 18. "Serial Peripheral Interface (SPI)"** (DS70206)
- Code Samples
- Application Notes
- Software Libraries
- Webinars
- All related *"dsPIC33F/PIC24H Family Reference Manual"* Sections
- Development Tools

© 2011-2012 Microchip Technology Inc.

16.3 SPI Control Registers

REGISTER 16-1: SPIxSTAT: SPIx STATUS AND CONTROL REGISTER

R/W-0	U-0	R/W-0	U-0	U-0	U-0	U-0	U-0
SPIEN	—	SPISIDL	—	—	—	—	—
bit 15							bit 8

U-0	R/C-0	U-0	U-0	U-0	U-0	R-0	R-0
—	SPIROV	—	—	—	—	SPITBF	SPIRBF
bit 7							bit 0

Legend:	C = Clearable bit		
R = Readable bit	W = Writable bit	U = Unimplemented bit, read as ‘0’	
-n = Value at POR	‘1’ = Bit is set	‘0’ = Bit is cleared	x = Bit is unknown

bit 15 **SPIEN:** SPIx Enable bit
1 = Enables module and configures SCKx, SDOx, SDIx and $\overline{SSx}$ as serial port pins
0 = Disables module

bit 14 **Unimplemented:** Read as ‘0’

bit 13 **SPISIDL:** Stop in Idle Mode bit
1 = Discontinues module operation when device enters Idle mode
0 = Continues module operation in Idle mode

bit 12-7 **Unimplemented:** Read as ‘0’

bit 6 **SPIROV:** Receive Overflow Flag bit
1 = A new byte/word is completely received and discarded; the user software has not read the previous data in the SPIxBUF register
0 = No overflow has occurred

bit 5-2 **Unimplemented:** Read as ‘0’

bit 1 **SPITBF:** SPIx Transmit Buffer Full Status bit
1 = Transmit not yet started, SPIxTXB is full
0 = Transmit started, SPIxTXB is empty
Automatically set in hardware when the CPU writes to the SPIxBUF location, loading SPIxTXB.
Automatically cleared in hardware when the SPIx module transfers data from SPIxTXB to SPIxSR.

bit 0 **SPIRBF:** SPIx Receive Buffer Full Status bit
1 = Receive is complete, SPIxRXB is full
0 = Receive is not complete, SPIxRXB is empty
Automatically set in hardware when SPIx transfers data from SPIxSR to SPIxRXB.
Automatically cleared in hardware when core reads the SPIxBUF location, reading SPIxRXB.

REGISTER 16-2: SPIxCON1: SPIx CONTROL REGISTER 1

U-0	U-0	U-0	R/W-0	R/W-0	R/W-0	R/W-0	R/W-0
—	—	—	DISSCK	DISSDO	MODE16	SMP	CKE(1)
bit 15							bit 8

R/W-0	R/W-0	R/W-0	R/W-0	R/W-0	R/W-0	R/W-0	R/W-0
SSEN(3)	CKP	MSTEN	SPRE<2:0>(2)			PPRE<1:0>(2)	
bit 7							bit 0

Legend:			
R = Readable bit	W = Writable bit	U = Unimplemented bit, read as ‘0’	
-n = Value at POR	‘1’ = Bit is set	‘0’ = Bit is cleared	x = Bit is unknown

bit 15-13 **Unimplemented:** Read as ‘0’

bit 12 **DISSCK:** Disable SCKx Pin bit (SPI Master modes only)
1 = Internal SPI clock is disabled; pin functions as I/O
0 = Internal SPI clock is enabled

bit 11 **DISSDO:** Disable SDOx Pin bit
1 = SDOx pin is not used by module; pin functions as I/O
0 = SDOx pin is controlled by the module

bit 10 **MODE16:** Word/Byte Communication Select bit
1 = Communication is word-wide (16 bits)
0 = Communication is byte-wide (8 bits)

bit 9 **SMP:** SPIx Data Input Sample Phase bit
Master mode:
1 = Input data is sampled at end of data output time
0 = Input data is sampled at middle of data output time
Slave mode:
SMP must be cleared when SPIx is used in Slave mode.

bit 8 **CKE:** SPIx Clock Edge Select bit(1)
1 = Serial output data changes on transition from active clock state to Idle clock state (see bit 6)
0 = Serial output data changes on transition from Idle clock state to active clock state (see bit 6)

bit 7 **SSEN:** Slave Select Enable bit (Slave mode)(3)
1 = $\overline{SSx}$ pin is used for Slave mode
0 = SSx pin is not used by module; pin is controlled by port function

bit 6 **CKP:** Clock Polarity Select bit
1 = Idle state for clock is a high level; active state is a low level
0 = Idle state for clock is a low level; active state is a high level

bit 5 **MSTEN:** Master Mode Enable bit
1 = Master mode
0 = Slave mode

Note 1: This bit is not used in Framed SPI modes. Program this bit to ‘0’ for the Framed SPI modes (FRMEN = 1).
2: Do not set both Primary and Secondary prescalers to a value of 1:1.
3: This bit must be cleared when FRMEN = 1.

© 2011-2012 Microchip Technology Inc.

REGISTER 16-2: SPIxCON1: SPIx CONTROL REGISTER 1 (CONTINUED)

bit 4-2 **SPRE<2:0>:** Secondary Prescale bits (Master mode)[2]

111 = Secondary prescale 1:1
110 = Secondary prescale 2:1
•
•
•
000 = Secondary prescale 8:1

bit 1-0 **PPRE<1:0>:** Primary Prescale bits (Master mode)[2]

11 = Primary prescale 1:1
10 = Primary prescale 4:1
01 = Primary prescale 16:1
00 = Primary prescale 64:1

Note 1: This bit is not used in Framed SPI modes. Program this bit to '0' for the Framed SPI modes (FRMEN = 1).

2: Do not set both Primary and Secondary prescalers to a value of 1:1.

3: This bit must be cleared when FRMEN = 1.

REGISTER 16-3: SPIxCON2: SPIx CONTROL REGISTER 2

R/W-0	R/W-0	R/W-0	U-0	U-0	U-0	U-0	U-0
FRMEN	SPIFSD	FRMPOL	—	—	—	—	—
bit 15							bit 8

U-0	U-0	U-0	U-0	U-0	U-0	R/W-0	U-0
—	—	—	—	—	—	FRMDLY	—
bit 7							bit 0

Legend:			
R = Readable bit	W = Writable bit	U = Unimplemented bit, read as ‘0’	
-n = Value at POR	‘1’ = Bit is set	‘0’ = Bit is cleared	x = Bit is unknown

bit 15 **FRMEN:** Framed SPIx Support bit
1 = Framed SPIx support enabled ($\overline{SSx}$ pin used as Frame Sync pulse input/output)
0 = Framed SPIx support disabled

bit 14 **SPIFSD:** Frame Sync Pulse Direction Control bit
1 = Frame Sync pulse input (slave)
0 = Frame Sync pulse output (master)

bit 13 **FRMPOL:** Frame Sync Pulse Polarity bit
1 = Frame Sync pulse is active-high
0 = Frame Sync pulse is active-low

bit 12-2 **Unimplemented:** Read as ‘0’

bit 1 **FRMDLY:** Frame Sync Pulse Edge Select bit
1 = Frame Sync pulse coincides with first bit clock
0 = Frame Sync pulse precedes first bit clock

bit 0 **Unimplemented:** This bit must not be set to ‘1’ by the user application

© 2011-2012 Microchip Technology Inc.

17.0 INTER-INTEGRATED CIRCUIT™ (I^2C™)

Note 1: This data sheet summarizes the features of the dsPIC33FJ06GS001/101A/102A/202A and dsPIC33FJ09GS302 families of devices. It is not intended to be a comprehensive reference source. To complement the information in this data sheet, refer to **Section 19. "Inter-Integrated Circuit (I^2C™)"** (DS70195) in the *"dsPIC33F/PIC24H Family Reference Manual"*, which is available on the Microchip web site (www.microchip.com).

2: Some registers and associated bits described in this section may not be available on all devices. Refer to **Section 4.0 "Memory Organization"** in this data sheet for device-specific register and bit information.

The Inter-Integrated Circuit™ (I^2C™) module provides complete hardware support for both Slave and Multi-Master modes of the I^2C serial communication standard with a 16-bit interface.

The I^2C module has a 2-pin interface:

- The SCL1 pin is the clock
- The SDA1 pin is data

The I^2C module offers the following key features:

- I^2C interface supporting both Master and Slave modes of operation
- I^2C Slave mode supports 7-bit and 10-bit addressing
- I^2C Master mode supports 7-bit and 10-bit addressing
- I^2C port allows bidirectional transfers between master and slaves
- Serial clock synchronization for I^2C port can be used as a handshake mechanism to suspend and resume serial transfer (SCLREL control)
- I^2C supports multi-master operation, detects bus collision and arbitrates accordingly

17.1 Operating Modes

The hardware fully implements all the master and slave functions of the I^2C Standard and Fast mode specifications, as well as 7-bit and 10-bit addressing.

The I^2C module can operate either as a slave or a master on an I^2C bus.

The following types of I^2C operation are supported:

- I^2C slave operation with 7-bit addressing
- I^2C slave operation with 10-bit addressing
- I^2C master operation with 7-bit or 10-bit addressing

For details about the communication sequence in each of these modes, please see the Microchip web site (www.microchip.com) for the latest *"dsPIC33F/PIC24H Family Reference Manual"* sections.

FIGURE 17-1: I²C™ BLOCK DIAGRAM

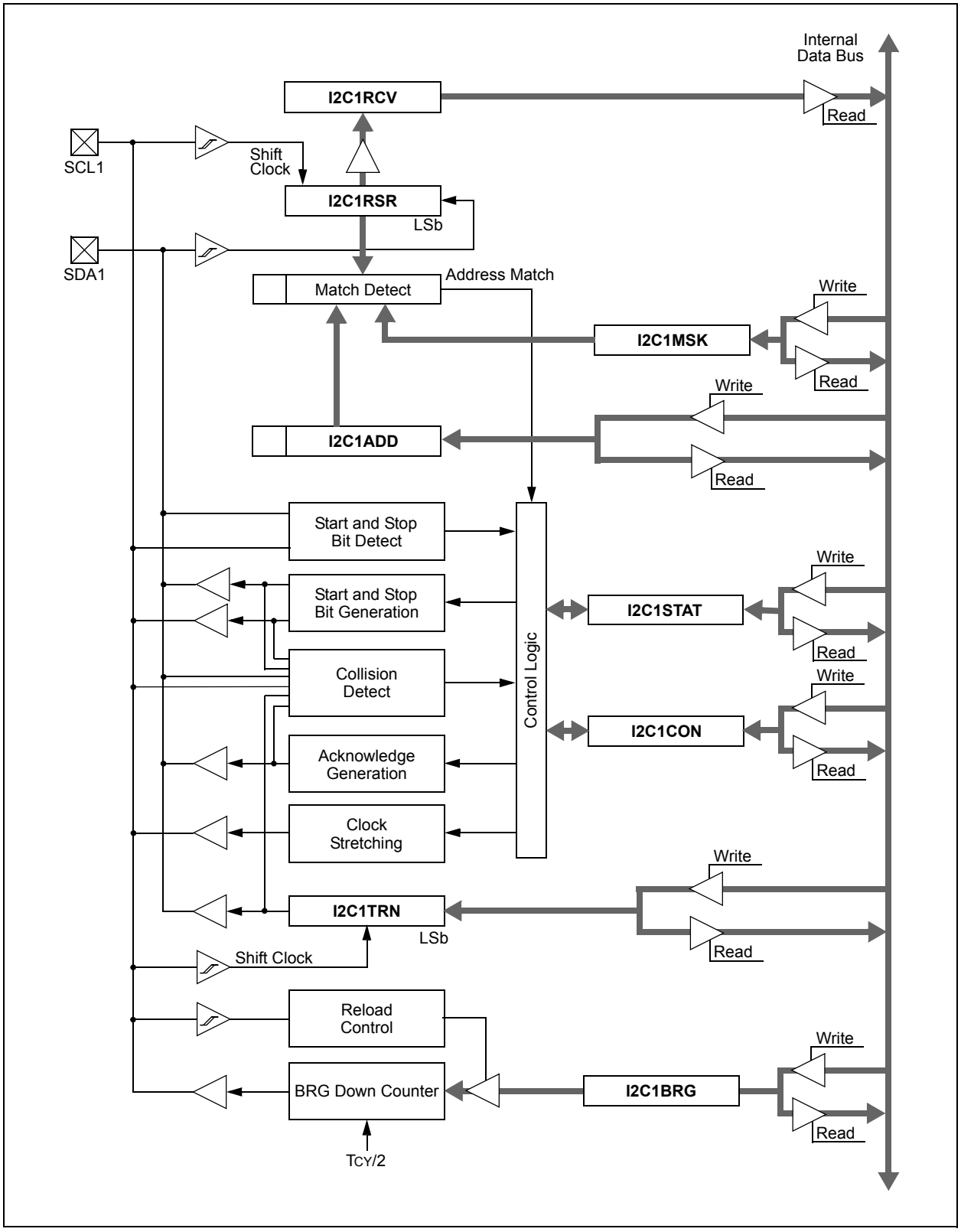

© 2011-2012 Microchip Technology Inc.

17.2 I²C Registers

I2C1CON and I2C1STAT are control and status registers, respectively. The I2C1CON register is readable and writable. The lower six bits of I2C1STAT are read-only. The remaining bits of the I2CSTAT are read/write:

- I2C1RSR is the shift register used for shifting data internal to the module and the user application has no access to it
- I2C1RCV is the receive buffer and the register to which data bytes are written, or from which data bytes are read
- I2C1TRN is the transmit register to which bytes are written during a transmit operation
- The I2C1ADD register holds the slave address
- A status bit, ADD10, indicates 10-Bit Address mode
- The I2C1BRG acts as the Baud Rate Generator (BRG) reload value

In receive operations, I2C1RSR and I2C1RCV together form a double-buffered receiver. When I2C1RSR receives a complete byte, it is transferred to I2C1RCV, and an interrupt pulse is generated.

REGISTER 17-1: I2C1CON: I2C1 CONTROL REGISTER

R/W-0	U-0	R/W-0	R/W-1, HC	R/W-0	R/W-0	R/W-0	R/W-0
I2CEN	—	I2CSIDL	SCLREL	IPMIEN	A10M	DISSLW	SMEN
bit 15							bit 8

R/W-0	R/W-0	R/W-0	R/W-0, HC	R/W-0, HC	R/W-0, HC	R/W-0, HC	R/W-0, HC
GCEN	STREN	ACKDT	ACKEN	RCEN	PEN	RSEN	SEN
bit 7							bit 0

Legend:	HC = Hardware Clearable bit		
R = Readable bit	W = Writable bit	U = Unimplemented bit, read as ‘0’	
-n = Value at POR	‘1’ = Bit is set	‘0’ = Bit is cleared	x = Bit is unknown

bit 15 **I2CEN:** I2C1 Enable bit
1 = Enables the I2C1 module and configures the SDA1 and SCL1 pins as serial port pins
0 = Disables the I2C1 module; all I²C pins are controlled by port functions

bit 14 **Unimplemented:** Read as ‘0’

bit 13 **I2CSIDL:** Stop in Idle Mode bit
1 = Discontinues module operation when device enters an Idle mode
0 = Continues module operation in Idle mode

bit 12 **SCLREL:** SCL1 Release Control bit (when operating as I²C slave)
1 = Releases SCL1 clock
0 = Holds SCL1 clock low (clock stretch)
If STREN = 1:
Bit is R/W (i.e., software can write ‘0’ to initiate stretch and write ‘1’ to release clock). Hardware is clear at beginning of slave transmission. Hardware is clear at end of slave reception.
If STREN = 0:
Bit is R/S (i.e., software can only write ‘1’ to release clock). Hardware is clear at beginning of slave transmission.

bit 11 **IPMIEN:** Intelligent Peripheral Management Interface (IPMI) Enable bit
1 = IPMI mode is enabled; all addresses Acknowledged
0 = IPMI mode is disabled

bit 10 **A10M:** 10-Bit Slave Address bit
1 = I2C1ADD is a 10-bit slave address
0 = I2C1ADD is a 7-bit slave address

bit 9 **DISSLW:** Disable Slew Rate Control bit
1 = Slew rate control is disabled
0 = Slew rate control is enabled

REGISTER 17-1: I2C1CON: I2C1 CONTROL REGISTER (CONTINUED)

bit 8 **SMEN:** SMBus Input Levels bit
1 = Enables I/O pin thresholds compliant with SMBus specification
0 = Disables SMBus input thresholds

bit 7 **GCEN:** General Call Enable bit (when operating as I^2C slave)
1 = Enables interrupt when a general call address is received in the I2C1RSR (module is enabled for reception)
0 = General call address is disabled

bit 6 **STREN:** SCL1 Clock Stretch Enable bit (when operating as I^2C slave)
Used in conjunction with SCLREL bit.
1 = Enables software or receives clock stretching
0 = Disables software or receives clock stretching

bit 5 **ACKDT:** Acknowledge Data bit (when operating as I^2C master, applicable during master receive)
Value that is transmitted when the software initiates an Acknowledge sequence.
1 = Sends NACK during Acknowledge
0 = Sends ACK during Acknowledge

bit 4 **ACKEN:** Acknowledge Sequence Enable bit
(when operating as I^2C master, applicable during master receive)
1 = Initiates Acknowledge sequence on SDA1 and SCL1 pins and transmits ACKDT data bit. Hardware is clear at end of master Acknowledge sequence.
0 = Acknowledge sequence is not in progress

bit 3 **RCEN:** Receive Enable bit (when operating as I^2C master)
1 = Enables Receive mode for I^2C. Hardware is clear at end of eighth bit of master receive data byte.
0 = Receive sequence is not in progress

bit 2 **PEN:** Stop Condition Enable bit (when operating as I^2C master)
1 = Initiates Stop condition on SDA1 and SCL1 pins. Hardware is clear at end of master Stop sequence.
0 = Stop condition is not in progress

bit 1 **RSEN:** Repeated Start Condition Enable bit (when operating as I^2C master)
1 = Initiates Repeated Start condition on SDA1 and SCL1 pins. Hardware is clear at end of master Repeated Start sequence.
0 = Repeated Start condition is not in progress

bit 0 **SEN:** Start Condition Enable bit (when operating as I^2C master)
1 = Initiates Start condition on SDA1 and SCL1 pins. Hardware is clear at end of master Start sequence.
0 = Start condition is not in progress

© 2011-2012 Microchip Technology Inc.

REGISTER 17-2: I2C1STAT: I2C1 STATUS REGISTER

R-0, HSC	R-0, HSC	U-0	U-0	U-0	R/C-0, HSC	R-0, HSC	R-0, HSC
ACKSTAT	TRSTAT	—	—	—	BCL	GCSTAT	ADD10
bit 15							bit 8

R/C-0, HS	R/C-0, HS	R-0, HSC	R/C-0, HSC	R/C-0, HSC	R-0, HSC	R-0, HSC	R-0, HSC
IWCOL	I2COV	D_A	P	S	R_W	RBF	TBF
bit 7							bit 0

Legend:	HS = Hardware Settable bit'	HSC = Hardware Settable/Clearable bit	
R = Readable bit	W = Writable bit	U = Unimplemented bit, read as '0'	C = Clearable bit
-n = Value at POR	'1' = Bit is set	'0' = Bit is cleared	x = Bit is unknown

bit 15 **ACKSTAT:** Acknowledge Status bit
(when operating as I^2C master, applicable to master transmit operation)
1 = NACK is received from slave
0 = ACK is received from slave
Hardware is set or clear at end of slave Acknowledge.

bit 14 **TRSTAT:** Transmit Status bit (when operating as I^2C master, applicable to master transmit operation)
1 = Master transmit is in progress (8 bits + ACK)
0 = Master transmit is not in progress
Hardware is set at beginning of master transmission. Hardware is clear at end of slave Acknowledge.

bit 13-11 **Unimplemented:** Read as '0'

bit 10 **BCL:** Master Bus Collision Detect bit
1 = A bus collision has been detected during a master operation
0 = No collision
Hardware is set at detection of bus collision.

bit 9 **GCSTAT:** General Call Status bit
1 = General call address was received
0 = General call address was not received
Hardware is set when address matches general call address. Hardware is clear at Stop detection.

bit 8 **ADD10:** 10-Bit Address Status bit
1 = 10-bit address was matched
0 = 10-bit address was not matched
Hardware is set at match of 2nd byte of matched 10-bit address. Hardware is clear at Stop detection.

bit 7 **IWCOL:** Write Collision Detect bit
1 = An attempt to write to the I2C1TRN register failed because the I^2C module is busy
0 = No collision
Hardware is set at occurrence of write to I2C1TRN while busy (cleared by software).

bit 6 **I2COV:** Receive Overflow Flag bit
1 = A byte was received while the I2C1RCV register is still holding the previous byte
0 = No overflow
Hardware is set at attempt to transfer I2C1RSR to I2C1RCV (cleared by software).

bit 5 **D_A:** Data/Address bit (when operating as I^2C slave)
1 = Indicates that the last byte received was data
0 = Indicates that the last byte received was the device address
Hardware is clear at device address match. Hardware is set by reception of slave byte.

bit 4 **P:** Stop bit
1 = Indicates that a Stop bit has been detected last
0 = Stop bit was not detected last
Hardware is set or clear when Start, Repeated Start or Stop is detected.

REGISTER 17-2: I2C1STAT: I2C1 STATUS REGISTER (CONTINUED)

bit 3 **S:** Start bit

1 = Indicates that a Start (or Repeated Start) bit has been detected last
0 = Start bit was not detected last
Hardware is set or clear when Start, Repeated Start or Stop is detected.

bit 2 **R_W:** Read/Write Information bit (when operating as I^2C slave)

1 = Read – indicates data transfer is output from slave
0 = Write – indicates data transfer is input to slave
Hardware is set or clear after reception of I^2C device address byte.

bit 1 **RBF:** Receive Buffer Full Status bit

1 = Receive is complete, I2C1RCV is full
0 = Receive is not complete, I2C1RCV is empty
Hardware is set when I2C1RCV is written with received byte. Hardware is clear when software reads I2C1RCV.

bit 0 **TBF:** Transmit Buffer Full Status bit

1 = Transmit is in progress, I2C1TRN is full
0 = Transmit is complete, I2C1TRN is empty
Hardware is set when software writes I2C1TRN. Hardware is clear at completion of data transmission.

© 2011-2012 Microchip Technology Inc.

REGISTER 17-3: I2C1MSK: I2C1 SLAVE MODE ADDRESS MASK REGISTER

U-0	U-0	U-0	U-0	U-0	U-0	R/W-0	R/W-0
—	—	—	—	—	—	AMSK<9:8>	
bit 15							bit 8

R/W-0	R/W-0	R/W-0	R/W-0	R/W-0	R/W-0	R/W-0	R/W-0
AMSK<7:0>							
bit 7							bit 0

Legend:			
R = Readable bit	W = Writable bit	U = Unimplemented bit, read as ‘0’	
-n = Value at POR	‘1’ = Bit is set	‘0’ = Bit is cleared	x = Bit is unknown

bit 15-10 **Unimplemented:** Read as ‘0’

bit 9-0 **AMSK<9:0>:** Mask for Address bit x Select bits

1 = Enables masking for bit x of incoming message address; bit match not required in this position
0 = Disables masking for bit x; bit match required in this position

NOTES:

© 2011-2012 Microchip Technology Inc.

18.0 UNIVERSAL ASYNCHRONOUS RECEIVER TRANSMITTER (UART)

Note 1: This data sheet summarizes the features of the dsPIC33FJ06GS001/101A/102A/202A and dsPIC33FJ09GS302 family of devices. It is not intended to be a comprehensive reference source. To complement the information in this data sheet, refer to **Section 17. "UART"** (DS70188) in the *"dsPIC33F/PIC24H Family Reference Manual"*, which is available on the Microchip web site (www.microchip.com).

2: Some registers and associated bits described in this section may not be available on all devices. Refer to **Section 4.0 "Memory Organization"** in this data sheet for device-specific register and bit information.

The Universal Asynchronous Receiver Transmitter (UART) module is a serial I/O module. The UART is a full-duplex, asynchronous system that can communicate with peripheral devices, such as personal computers, LIN/J2602, RS-232 and RS-485 interfaces. The module also supports a hardware flow control option with the $\overline{\text{U1CTS}}$ and $\overline{\text{U1RTS}}$ pins, and also includes an IrDA® encoder and decoder.

Note: The dsPIC33FJ06GS001 device does not have a UART module.

The primary features of the UART module are:

- Full-duplex, 8-bit or 9-bit data transmission through the U1TX and U1RX pins
- Even, Odd or No Parity options (for 8-bit data)
- One or two Stop bits
- Hardware flow control option with $\overline{\text{U1CTS}}$ and $\overline{\text{U1RTS}}$ pins
- Fully integrated Baud Rate Generator (BRG) with 16-bit prescaler
- Baud rates ranging from 10 Mbps to 38 bps at 40 MIPS
- 4-deep First-In First-Out (FIFO) transmit data buffer
- 4-deep FIFO receive data buffer
- Parity, framing and buffer overrun error detection
- Support for 9-bit mode with address detect (9th bit = 1)
- Transmit and Receive interrupts
- Separate interrupt for all UART error conditions
- Loopback mode for diagnostic support
- Support for Sync and Break characters
- Support for automatic baud rate detection
- IrDA encoder and decoder logic
- 16x baud clock output for IrDA® support

A simplified block diagram of the UART module is shown in Figure 18-1. The UART module consists of these key hardware elements:

- BRG
- Asynchronous transmitter
- Asynchronous receiver

FIGURE 18-1: UART SIMPLIFIED BLOCK DIAGRAM

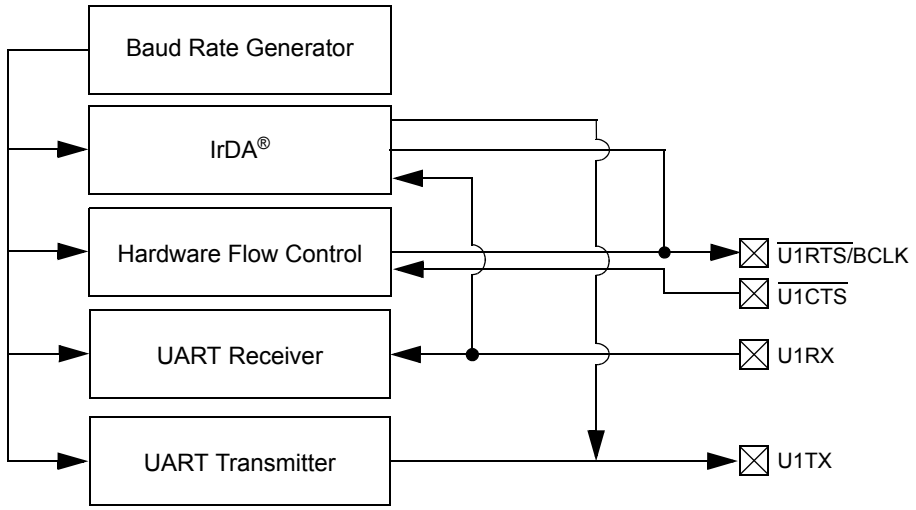

18.1 UART Helpful Tips

1. In multinode, direct-connect UART networks, UART receive inputs react to the complementary logic level defined by the URXINV bit (U1MODE<4>), which defines the Idle state, the default of which is logic high, (i.e., URXINV = `0`). Because remote devices do not initialize at the same time, it is likely that one of the devices, because the RX line is floating, will trigger a Start bit detection and will cause the first byte received after the device has been initialized to be invalid. To avoid this situation, the user should use a pull-up or pull-down resistor on the RX pin, depending on the value of the URXINV bit.
   a) If URXINV = `0`, use a pull-up resistor on the RX pin.
   b) If URXINV = `1`, use a pull-down resistor on the RX pin.
2. The first character received on a wake-up from Sleep mode, caused by activity on the UxRX pin of the UART module, will be invalid. In Sleep mode, peripheral clocks are disabled. By the time the oscillator system has restarted and stabilized from Sleep mode, the baud rate bit sampling clock, relative to the incoming UxRX bit timing, is no longer synchronized. This results in the first character being invalid; this is to be expected.

18.2 UART Resources

Many useful resources related to UART are provided on the Microchip web site (www.microchip.com).

18.2.1 KEY RESOURCES

- **Section 17. "UART"** (DS70188) in the *"dsPIC33F/PIC24H Family Reference Manual"*
- Code Samples
- Application Notes
- Software Libraries
- Webinars
- All related *"dsPIC33F/PIC24H Family Reference Manual"* Sections
- Development Tools

© 2011-2012 Microchip Technology Inc.

18.3 UART Registers

REGISTER 18-1: U1MODE: UART1 MODE REGISTER

R/W-0	U-0	R/W-0	R/W-0	R/W-0	U-0	R/W-0	R/W-0
UARTEN(1,3)	—	USIDL(3)	IREN(2,3)	RTSMD(3)	—	UEN<1:0>(3)	
bit 15							bit 8

R/W-0, HC	R/W-0	R/W-0, HC	R/W-0	R/W-0	R/W-0	R/W-0	R/W-0
WAKE(3)	LPBACK(3)	ABAUD(3)	URXINV(3)	BRGH(3)	PDSEL<1:0>(3)		STSEL(3)
bit 7							bit 0

Legend:	HC = Hardware Clearable bit		
R = Readable bit	W = Writable bit	U = Unimplemented bit, read as ‘0’	
-n = Value at POR	‘1’ = Bit is set	‘0’ = Bit is cleared	x = Bit is unknown

bit 15 **UARTEN:** UART1 Enable bit(1,3)
- 1 = UART1 is enabled; all UART1 pins are controlled by UART1, as defined by UEN<1:0>
- 0 = UART1 is disabled; all UART1 pins are controlled by port latches; UART1 power consumption is minimal

bit 14 **Unimplemented:** Read as ‘0’

bit 13 **USIDL:** Stop in Idle Mode bit(3)
- 1 = Discontinues module operation when device enters Idle mode
- 0 = Continues module operation in Idle mode

bit 12 **IREN:** IrDA® Encoder and Decoder Enable bit(2,3)
- 1 = IrDA® encoder and decoder are enabled
- 0 = IrDA® encoder and decoder are disabled

bit 11 **RTSMD:** Mode Selection for $\overline{\text{U1RTS}}$ Pin bit(3)
- 1 = $\overline{\text{U1RTS}}$ pin is in Simplex mode
- 0 = $\overline{\text{U1RTS}}$ pin is in Flow Control mode

bit 10 **Unimplemented:** Read as ‘0’

bit 9-8 **UEN<1:0>:** UART1 Pin Enable bits(3)
- 11 = U1TX, U1RX and BCLK pins are enabled and used; $\overline{\text{U1CTS}}$ pin is controlled by port latches
- 10 = U1TX, U1RX, $\overline{\text{U1CTS}}$ and $\overline{\text{U1RTS}}$ pins are enabled and used
- 01 = U1TX, U1RX and $\overline{\text{U1RTS}}$ pins are enabled and used; $\overline{\text{U1CTS}}$ pin is controlled by port latches
- 00 = U1TX and U1RX pins are enabled and used; $\overline{\text{U1CTS}}$ and $\overline{\text{U1RTS}}$/BCLK pins are controlled by port latches

bit 7 **WAKE:** Wake-up on Start bit Detect During Sleep Mode Enable bit(3)
- 1 = UART1 will continue to sample the U1RX pin; interrupt is generated on falling edge; bit is cleared in hardware on following rising edge
- 0 = No wake-up is enabled

bit 6 **LPBACK:** UART1 Loopback Mode Select bit(3)
- 1 = Enable Loopback mode
- 0 = Loopback mode is disabled

bit 5 **ABAUD:** Auto-Baud Enable bit(3)
- 1 = Enable baud rate measurement on the next character – requires reception of a Sync field (0x55) before other data; cleared in hardware upon completion
- 0 = Baud rate measurement is disabled or completed

Note 1: Refer to **Section 17. “UART”** (DS70188) in the *“dsPIC33F/PIC24H Family Reference Manual”* for information on enabling the UART module for receive or transmit operation.

2: This feature is only available for the 16x BRG mode (BRGH = 0).

3: This bit is not available in the dsPIC33FJ06GS001 device.

REGISTER 18-1: U1MODE: UART1 MODE REGISTER (CONTINUED)

bit 4 **URXINV:** Receive Polarity Inversion bit(3)
1 = U1RX Idle state is '0'
0 = U1RX Idle state is '1'

bit 3 **BRGH:** High Baud Rate Enable bit(3)
1 = BRG generates 4 clocks per bit period (4x baud clock, High-Speed mode)
0 = BRG generates 16 clocks per bit period (16x baud clock, Standard mode)

bit 2-1 **PDSEL<1:0>:** Parity and Data Selection bits(3)
11 = 9-bit data, no parity
10 = 8-bit data, odd parity
01 = 8-bit data, even parity
00 = 8-bit data, no parity

bit 0 **STSEL:** Stop Bit Selection bit(3)
1 = Two Stop bits
0 = One Stop bit

Note 1: Refer to **Section 17. "UART"** (DS70188) in the *"dsPIC33F/PIC24H Family Reference Manual"* for information on enabling the UART module for receive or transmit operation.

2: This feature is only available for the 16x BRG mode (BRGH = 0).

3: This bit is not available in the dsPIC33FJ06GS001 device.

© 2011-2012 Microchip Technology Inc.

REGISTER 18-2: U1STA: UART1 STATUS AND CONTROL REGISTER

R/W-0	R/W-0	R/W-0	U-0	R/W-0, HC	R/W-0	R-0	R-1
UTXISEL1(2)	UTXINV(2)	UTXISEL0(2)	—	UTXBRK(2)	UTXEN(1,2)	UTXBF(2)	TRMT(2)
bit 15							bit 8

R/W-0	R/W-0	R/W-0	R-1	R-0	R-0	R/C-0	R-0
URXISEL<1:0>(2)		ADDEN(2)	RIDLE(2)	PERR(2)	FERR(2)	OERR(2)	URXDA(2)
bit 7							bit 0

Legend:	HC = Hardware Clearable bit	C = Clearable bit	
R = Readable bit	W = Writable bit	U = Unimplemented bit, read as ‘0’	
-n = Value at POR	‘1’ = Bit is set	‘0’ = Bit is cleared	x = Bit is unknown

bit 15,13 **UTXISEL<1:0>:** Transmission Interrupt Mode Selection bits(2)
- 11 = Reserved; do not use
- 10 = Interrupt when a character is transferred to the Transmit Shift Register (TSR), and as a result, the transmit buffer becomes empty
- 01 = Interrupt when the last character is shifted out of the Transmit Shift Register; all transmit operations are completed
- 00 = Interrupt when a character is transferred to the Transmit Shift Register (this implies that there is at least one character open in the transmit buffer)

bit 14 **UTXINV:** Transmit Polarity Inversion bit(2)

If IREN = 0:
- 1 = U1TX Idle state is ‘0’
- 0 = U1TX Idle state is ‘1’

If IREN = 1:
- 1 = IrDA® encoded U1TX Idle state is ‘1’
- 0 = IrDA encoded U1TX Idle state is ‘0’

bit 12 **Unimplemented:** Read as ‘0’

bit 11 **UTXBRK:** Transmit Break bit(2)
- 1 = Send Sync Break on next transmission – Start bit, followed by twelve ‘0’ bits, followed by Stop bit; cleared by hardware upon completion
- 0 = Sync Break transmission is disabled or completed

bit 10 **UTXEN:** Transmit Enable bit(1,2)
- 1 = Transmit is enabled, U1TX pin is controlled by UART1
- 0 = Transmit is disabled, any pending transmission is aborted and buffer is reset; U1TX pin is controlled by port

bit 9 **UTXBF:** Transmit Buffer Full Status bit (read-only)(2)
- 1 = Transmit buffer is full
- 0 = Transmit buffer is not full; at least one more character can be written

bit 8 **TRMT:** Transmit Shift Register Empty bit (read-only)(2)
- 1 = Transmit Shift Register is empty and transmit buffer is empty (the last transmission has completed)
- 0 = Transmit Shift Register is not empty, a transmission is in progress or queued

Note 1: Refer to **Section 17. “UART”** (DS70188) in the *“dsPIC33F/PIC24H Family Reference Manual”* for information on enabling the UART module for transmit operation.

2: This bit is not available in the dsPIC33FJ06GS001 device.

REGISTER 18-2: U1STA: UART1 STATUS AND CONTROL REGISTER (CONTINUED)

bit 7-6 **URXISEL<1:0>:** Receive Interrupt Mode Selection bits[2]

11 = Interrupt is set on U1RSR transfer, making the receive buffer full (i.e., has 4 data characters)
10 = Interrupt is set on U1RSR transfer, making the receive buffer 3/4 full (i.e., has 3 data characters)
0x = Interrupt is set when any character is received and transferred from the U1RSR to the receive buffer; receive buffer has one or more characters

bit 5 **ADDEN:** Address Character Detect bit (bit 8 of received data = 1)[2]

1 = Address Detect mode is enabled; if 9-bit mode is not selected, this does not take effect
0 = Address Detect mode is disabled

bit 4 **RIDLE:** Receiver Idle bit (read-only)[2]

1 = Receiver is Idle
0 = Receiver is active

bit 3 **PERR:** Parity Error Status bit (read-only)[2]

1 = Parity error has been detected for the current character (character at the top of the receive FIFO)
0 = Parity error has not been detected

bit 2 **FERR:** Framing Error Status bit (read-only)[2]

1 = Framing error has been detected for the current character (character at the top of the receive FIFO)
0 = Framing error has not been detected

bit 1 **OERR:** Receive Buffer Overrun Error Status bit (clear/read-only)[2]

1 = Receive buffer has overflowed
0 = Receive buffer has not overflowed. Clearing a previously set OERR bit (1 → 0 transition) will reset the receiver buffer and the U1RSR to the empty state.

bit 0 **URXDA:** Receive Buffer Data Available bit (read-only)[2]

1 = Receive buffer has data, at least one more character can be read
0 = Receive buffer is empty

Note 1: Refer to **Section 17. "UART"** (DS70188) in the *"dsPIC33F/PIC24H Family Reference Manual"* for information on enabling the UART module for transmit operation.

2: This bit is not available in the dsPIC33FJ06GS001 device.

© 2011-2012 Microchip Technology Inc.

19.0 HIGH-SPEED 10-BIT ANALOG-TO-DIGITAL CONVERTER (ADC)

Note 1: This data sheet summarizes the features of the dsPIC33FJ06GS001/101A/102A/202A and dsPIC33FJ09GS302 families of devices. It is not intended to be a comprehensive reference source. To complement the information in this data sheet, refer to **Section 44. "High-Speed 10-Bit ADC"** (DS70321) in the *"dsPIC33F/PIC24H Family Reference Manual"*, which is available on the Microchip web site (www.microchip.com).

2: Some registers and associated bits described in this section may not be available on all devices. Refer to **Section 4.0 "Memory Organization"** in this data sheet for device-specific register and bit information.

The dsPIC33FJ06GS001/101A/102A/202A and dsPIC33FJ09GS302 family of devices provides high-speed successive approximation, Analog-to-Digital conversions to support applications such as AC-to-DC and DC-to-DC Power Converters.

19.1 Features Overview

The ADC module comprises the following features:

- 10-bit resolution
- Unipolar inputs
- One Successive Approximation Register (SAR)
- Up to eight external input channels
- Up to two internal analog inputs
- Dedicated result register for each analog input
- ±1 LSB accuracy at 3.3V
- Single supply operation
- 2 Msps conversion rate at 3.3V
- Low-power CMOS technology

19.2 Module Description

This ADC module is designed for applications that require low latency between the request for conversion and the resultant output data. Typical applications include:

- AC/DC Power Supplies
- DC/DC Converters
- Power Factor Correction (PFC)

This ADC works with the high-speed PWM module in power control applications that require high-frequency control loops. This small conversion delay reduces the "phase lag" between measurement and control system response.

Up to three inputs may be sampled at a time (two inputs from the dedicated Sample-and-Hold circuits and one from the shared Sample-and-Hold circuit). If multiple inputs request conversion, the ADC will convert them in a sequential manner, starting with the lowest order input.

This ADC design provides each pair of analog inputs (AN1, AN0), (AN3, AN2),..., the ability to specify its own trigger source out of a maximum of sixteen different trigger sources. This capability allows this ADC to sample and convert analog inputs that are associated with PWM generators operating on independent time bases.

The user application typically requires synchronization between analog data sampling and PWM output to the application circuit. The very high-speed operation of this ADC module allows "data on demand".

In addition, several hardware features have been added to the peripheral interface to improve real-time performance in a typical DSP-based application:

- Result alignment options
- Automated sampling
- External conversion start control
- Two internal inputs to monitor INTREF and EXTREF input signals (not available in dsPIC33FJ06GS101A/102A devices)

Block diagrams of the ADC module are shown in Figure 19-1 through Figure 19-5.

19.3 Module Functionality

The high-speed, 10-bit ADC module is designed to support power conversion applications when used with the high-speed PWM module. The ADC has one SAR and only one conversion can be processed at a time, yielding a conversion rate of 2 Msps or the equivalent of one 10-bit conversion, in half a microsecond (0.5 µs).

The ADC module supports up to eight external analog inputs and two internal analog inputs. To monitor reference voltage, two internal inputs, AN12 and AN13, are connected to the EXTREF and INTREF voltages, respectively.

Note: The dsPIC33FJ06GS101A/102A devices do not have the internal connection to EXTREF.

The analog reference voltage is defined as the device supply voltage (AV_{DD}/AV_{SS}).

FIGURE 19-1: ADC BLOCK DIAGRAM FOR THE dsPIC33FJ06GS001 DEVICE

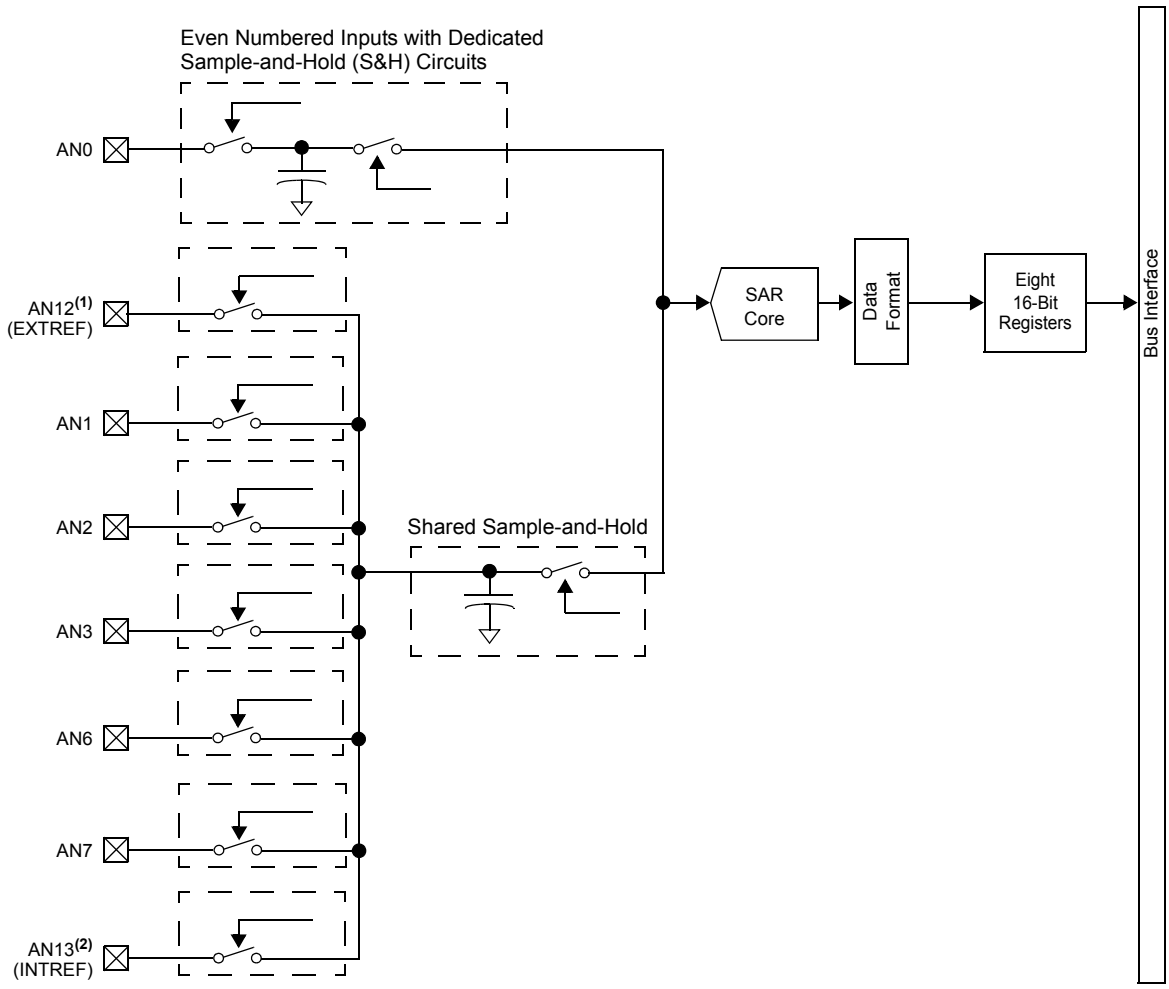

Note 1: To measure the voltage at AN12 (EXTREF), an analog comparator must be enabled and EXTREF must be selected as the comparator reference.

2: AN13 (INTREF) is an internal analog input and is not available on a pin.

© 2011-2012 Microchip Technology Inc.

FIGURE 19-2: ADC BLOCK DIAGRAM FOR THE dsPIC33FJ06GS101A DEVICE

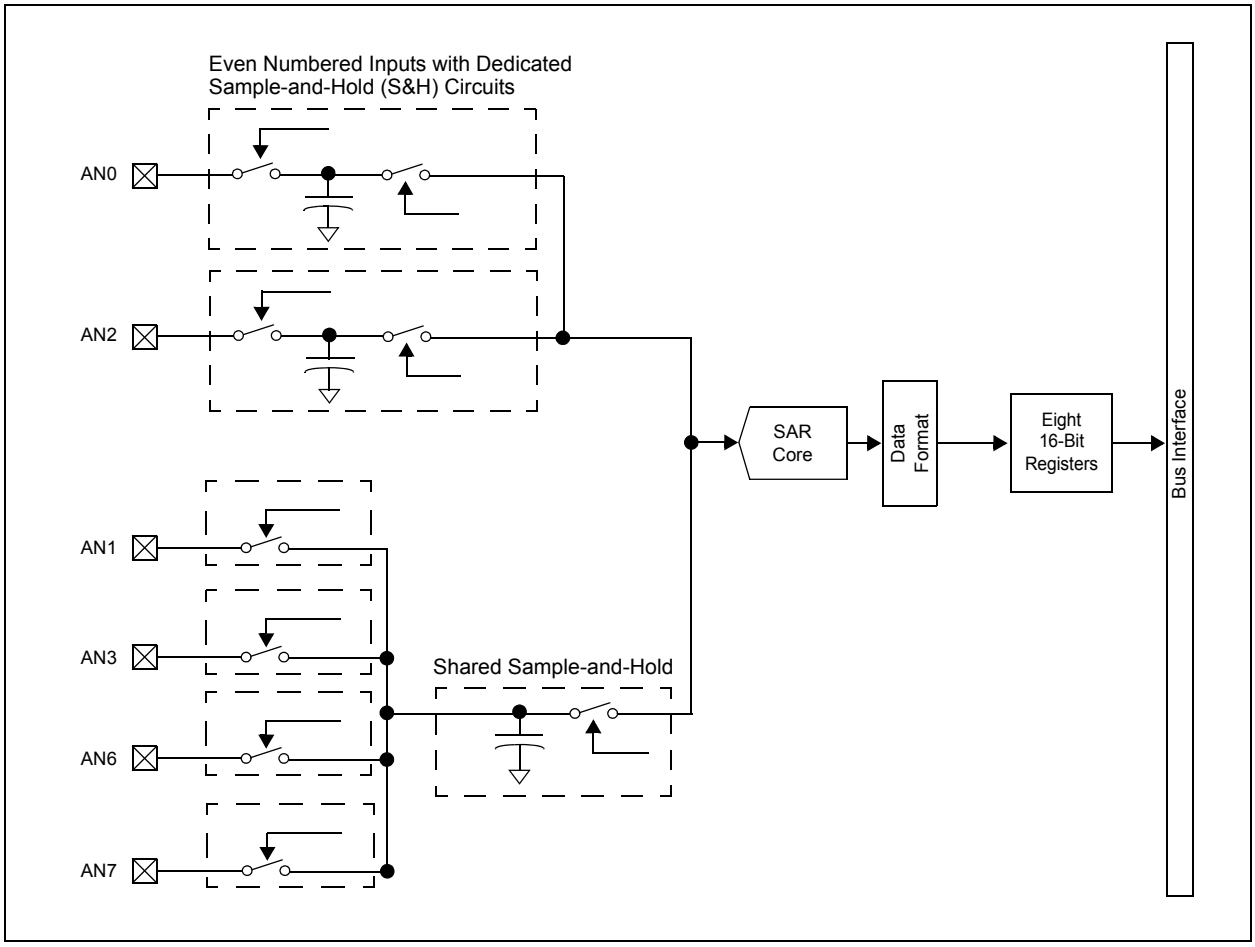

FIGURE 19-3: ADC BLOCK DIAGRAM FOR dsPIC33FJ06GS102A DEVICE

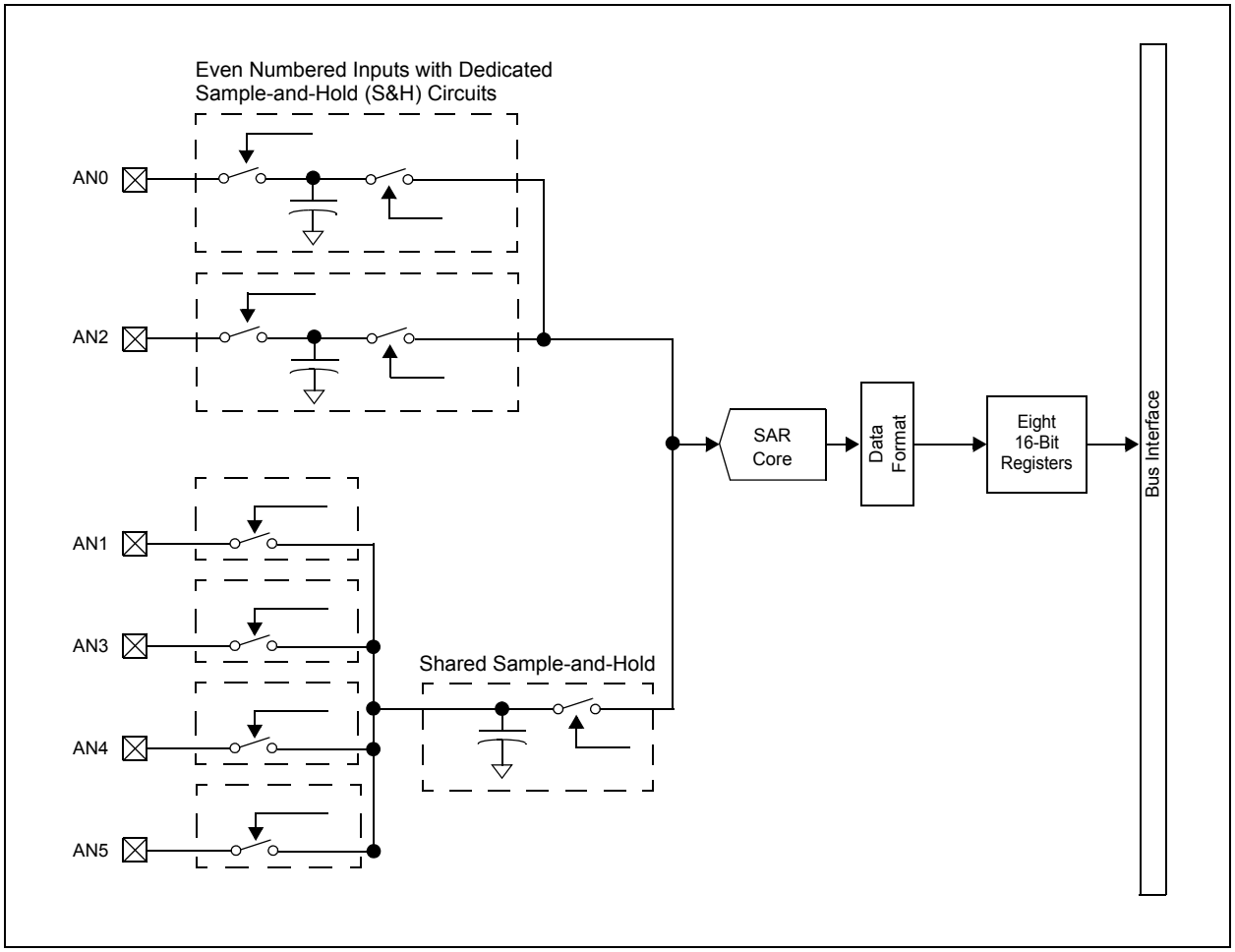

© 2011-2012 Microchip Technology Inc.

FIGURE 19-4: ADC BLOCK DIAGRAM FOR dsPIC33FJ06GS202A DEVICE

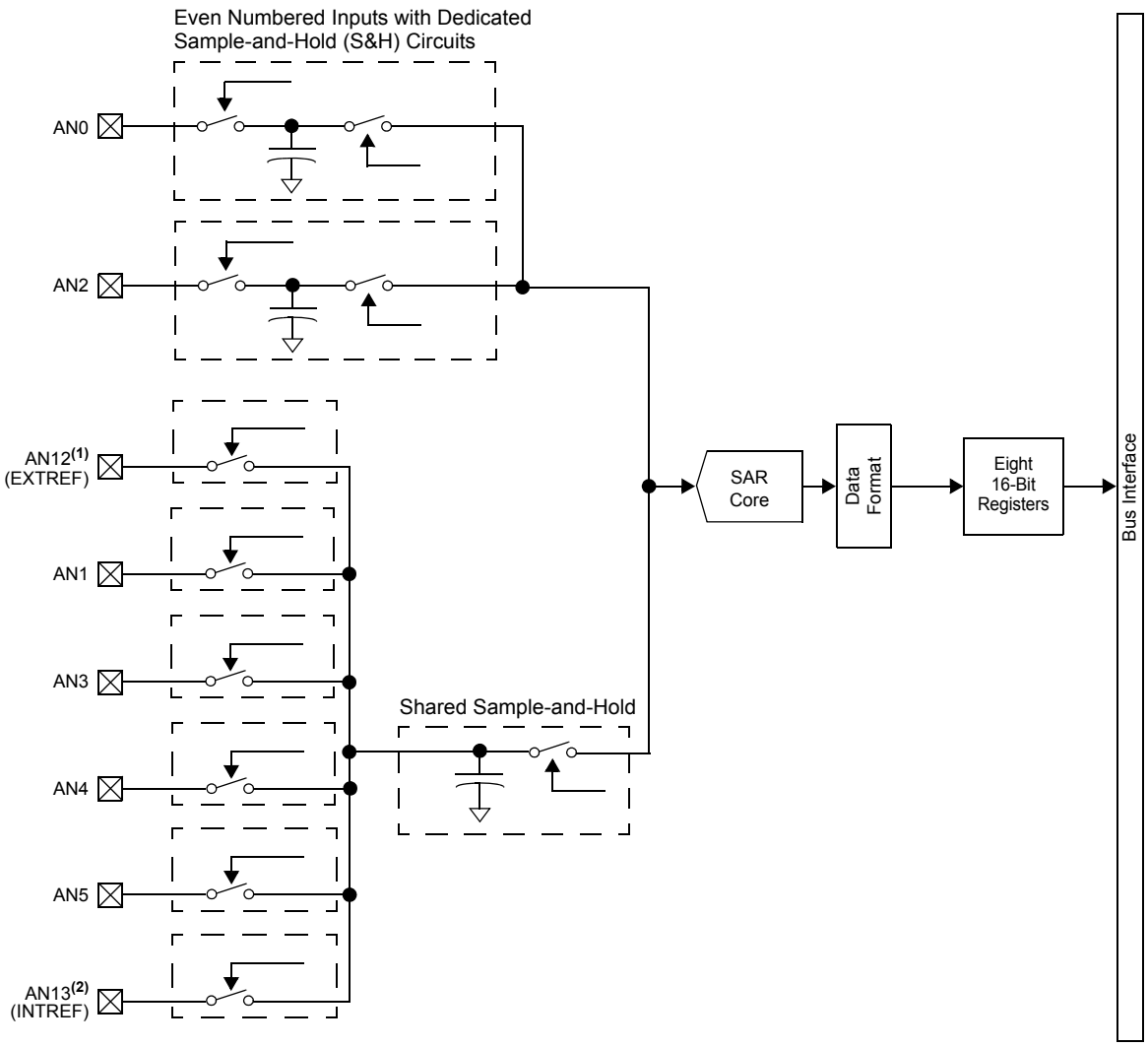

Note 1: To measure the voltage at AN12 (EXTREF), an analog comparator must be enabled and EXTREF must be selected as the comparator reference.

2: AN13 (INTREF) is an internal analog input and is not available on a pin.

FIGURE 19-5: ADC BLOCK DIAGRAM FOR dsPIC33FJ09GS302 DEVICE

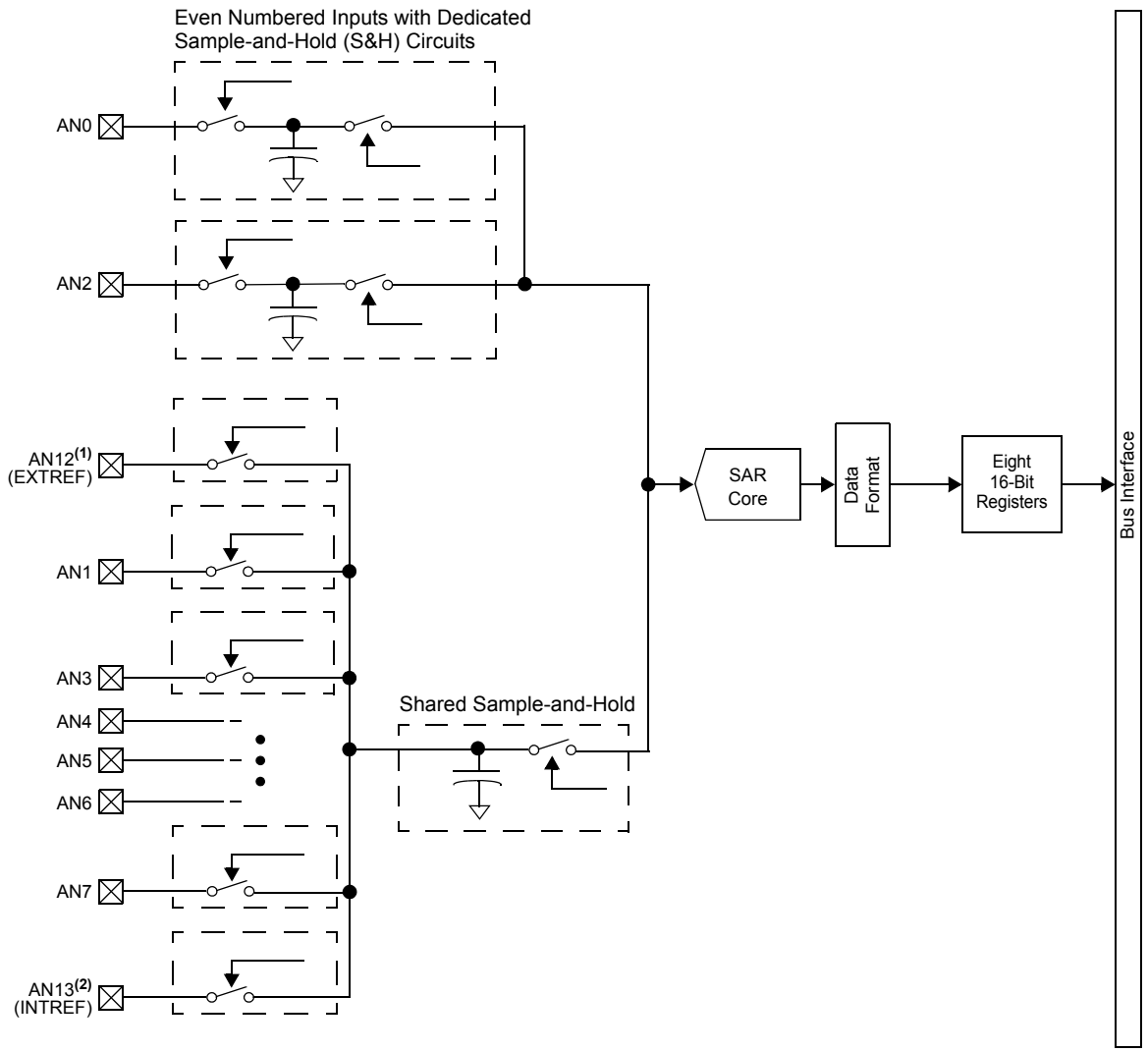

Note 1: To measure the voltage at AN12 (EXTREF), an analog comparator must be enabled and EXTREF must be selected as the comparator reference.

2: AN13 (INTREF) is an internal analog input and is not available on a pin.

© 2011-2012 Microchip Technology Inc.

19.4 ADC Control Registers

The ADC module uses the following control and status registers:

- ADCON: ADC Control Register
- ADSTAT: ADC Status Register
- ADBASE: ADC Base Register(1)
- ADPCFG: ADC Port Configuration Register
- ADCPC0: ADC Convert Pair Control Register 0
- ADCPC1: ADC Convert Pair Control Register 1
- ADCPC3: ADC Convert Pair Control Register 3(1)

The ADCON register controls the operation of the ADC module. The ADSTAT register displays the status of the conversion processes. The ADPCFG register configures the port pins as analog inputs or as digital I/Os. The ADCPCx registers control the triggering of the ADC conversions. See Register 19-1 through Register 19-7 for detailed bit configurations.

Note: A unique feature of the ADC module is its ability to sample inputs in an asynchronous manner. Individual Sample-and-Hold circuits can be triggered independently of each other.

REGISTER 19-1: ADCON: ADC CONTROL REGISTER

R/W-0	U-0	R/W-0	R/W-0	U-0	R/W-0	U-0	R/W-0
ADON	—	ADSIDL	SLOWCLK(1)	—	GSWTRG	—	FORM(1)
bit 15							bit 8

R/W-0	R/W-0	R/W-0	R/W-0	U-0	R/W-0	R/W-1	R/W-1
EIE(1)	ORDER(1)	SEQSAMP(1)	ASYNCSAMP(1)	—	ADCS<2:0>(1)		
bit 7							bit 0

Legend:			
R = Readable bit	W = Writable bit	U = Unimplemented bit, read as ‘0’	
-n = Value at POR	‘1’ = Bit is set	‘0’ = Bit is cleared	x = Bit is unknown

bit 15 **ADON:** ADC Operating Mode bit
1 = ADC module is operating
0 = ADC module is off

bit 14 **Unimplemented:** Read as ‘0’

bit 13 **ADSIDL:** Stop in Idle Mode bit
1 = Discontinues module operation when device enters Idle mode
0 = Continues module operation in Idle mode

bit 12 **SLOWCLK:** Enable Slow Clock Divider bit(1)
1 = ADC is clocked by the auxiliary PLL (ACLK)
0 = ADC is clocked by the primary PLL (FVCO)

bit 11 **Unimplemented:** Read as ‘0’

bit 10 **GSWTRG:** Global Software Trigger bit
When this bit is set by the user, it will trigger conversions if selected by the TRGSRC<4:0> bits in the ADCPCx registers. This bit must be cleared by the user prior to initiating another global trigger (i.e., this bit is not auto-clearing).

bit 9 **Unimplemented:** Read as ‘0’

Note 1: This control bit can only be changed while the ADC is disabled (ADON = 0).

REGISTER 19-1: ADCON: ADC CONTROL REGISTER (CONTINUED)

bit 8 **FORM:** Data Output Format bit(1)
1 = Fractional (DOUT = dddd dddd dd00 0000)
0 = Integer (DOUT = 0000 00dd dddd dddd)

bit 7 **EIE:** Early Interrupt Enable bit(1)
1 = Interrupt is generated after first conversion is completed
0 = Interrupt is generated after second conversion is completed

bit 6 **ORDER:** Conversion Order bit(1)
1 = Odd numbered analog input is converted first, followed by conversion of even numbered input
0 = Even numbered analog input is converted first, followed by conversion of odd numbered input

bit 5 **SEQSAMP:** Sequential Sample Enable bit(1)
1 = Shared Sample-and-Hold (S&H) circuit is sampled at the start of the second conversion if ORDER = 0. If ORDER = 1, then the shared S&H is sampled at the start of the first conversion.
0 = Shared S&H is sampled at the same time the dedicated S&H is sampled if the shared S&H is not currently busy with an existing conversion process. If the shared S&H is busy at the time the dedicated S&H is sampled, then the shared S&H will sample at the start of the new conversion cycle.

bit 4 **ASYNCSAMP:** Asynchronous Dedicated S&H Sampling Enable bit(1)
1 = The dedicated S&H is constantly sampling and then terminates sampling as soon as the trigger pulse is detected
0 = The dedicated S&H starts sampling when the trigger event is detected and completes the sampling process in two ADC clock cycles

bit 3 **Unimplemented:** Read as '0'

bit 2-0 **ADCS<2:0>:** Analog-to-Digital Conversion Clock Divider Select bits(1)
111 = FADC/8
110 = FADC/7
101 = FADC/6
100 = FADC/5
011 = FADC/4 (default)
010 = FADC/3
001 = FADC/2
000 = FADC/1

Note 1: This control bit can only be changed while the ADC is disabled (ADON = 0).

© 2011-2012 Microchip Technology Inc.

REGISTER 19-2: ADSTAT: ADC STATUS REGISTER

U-0	U-0	U-0	U-0	U-0	U-0	U-0	U-0
—	—	—	—	—	—	—	—
bit 15							bit 8

U-0	R/C-0, HS	U-0	U-0	R/C-0, HS	R/C-0, HS	R/C-0, HS	R/C-0, HS
—	P6RDY	—	—	P3RDY(1)	P2RDY(2)	P1RDY	P0RDY
bit 7							bit 0

Legend:	C = Clearable bit	HS = Hardware Settable bit	
R = Readable bit	W = Writable bit	U = Unimplemented bit, read as ‘0’	
-n = Value at POR	‘1’ = Bit is set	‘0’ = Bit is cleared	x = Bit is unknown

bit 15-7 **Unimplemented:** Read as ‘0’

bit 6 **P6RDY:** Conversion Data for Pair 6 Ready bit
Bit is set when data is ready in buffer, cleared when a ‘0’ is written to this bit.

bit 5-4 **Unimplemented:** Read as ‘0’

bit 3 **P3RDY:** Conversion Data for Pair 3 Ready bit(1)
Bit is set when data is ready in buffer, cleared when a ‘0’ is written to this bit.

bit 2 **P2RDY:** Conversion Data for Pair 3 Ready bit(2)
Bit is set when data is ready in buffer, cleared when a ‘0’ is written to this bit.

bit 1 **P1RDY:** Conversion Data for Pair 1 Ready bit
Bit is set when data is ready in buffer, cleared when a ‘0’ is written to this bit.

bit 0 **P0RDY:** Conversion Data for Pair 0 Ready bit
Bit is set when data is ready in buffer, cleared when a ‘0’ is written to this bit.

Note 1: This bit is not implemented in dsPIC33FJ06GS102A/202A devices.
2: This bit is not implemented in dsPIC33FJ06GS001/101A devices.

REGISTER 19-3: ADBASE: ADC BASE REGISTER(1)

R/W-0	R/W-0	R/W-0	R/W-0	R/W-0	R/W-0	R/W-0	R/W-0
ADBASE<15:8>(2)							
bit 15							bit 8

R/W-0	R/W-0	R/W-0	R/W-0	R/W-0	R/W-0	R/W-0	U-0
ADBASE<7:1>(2)							—
bit 7							bit 0

Legend:			
R = Readable bit	W = Writable bit	U = Unimplemented bit, read as ‘0’	
-n = Value at POR	‘1’ = Bit is set	‘0’ = Bit is cleared	x = Bit is unknown

bit 15-1 **ADBASE<15:1>:** ADC Base Register bits(2)

This register contains the base address of the user’s ADC Interrupt Service Routine (ISR) jump table. This register, when read, contains the sum of the ADBASE register contents and the encoded value of the PxRDY status bits.

The encoder logic provides the bit number of the highest priority PxRDY bits, where P0RDY is the highest priority and P6RDY is the lowest priority.

bit 0 **Unimplemented:** Read as ‘0’

Note 1: As an alternative to using the ADBASE register, the ADCP0-6 ADC Pair Conversion Complete Interrupts can be used to invoke A to D conversion completion routines for individual ADC input pairs.

2: The encoding results are shifted left two bits, so bits 1-0 of the result are always zero.

© 2011-2012 Microchip Technology Inc.

REGISTER 19-4: ADPCFG: ADC PORT CONFIGURATION REGISTER

U-0	U-0	U-0	U-0	U-0	U-0	U-0	U-0
—	—	—	—	—	—	—	—
bit 15							bit 8

R/W-0	R/W-0	U-0	U-0	R/W-0	R/W-0	R/W-0	R/W-0
PCFG7(1)	PCFG6(1)	—	—	PCFG3	PCFG2	PCFG1	PCFG0
bit 7							bit 0

Legend:			
R = Readable bit	W = Writable bit	U = Unimplemented bit, read as ‘0’	
-n = Value at POR	‘1’ = Bit is set	‘0’ = Bit is cleared	x = Bit is unknown

bit 15-8 **Unimplemented:** Read as ‘0’

bit 7-6 **PCFG<7:6>:** Analog-to-Digital Port Configuration Control bits(1)

1 = Port pin is in Digital mode; port read input is enabled; Analog-to-Digital input multiplexer is connected to AVSS

0 = Port pin is in Analog mode; port read input is disabled; Analog-to-Digital samples pin voltage

bit 5-4 **Unimplemented:** Read as ‘0’

bit 3-0 **PCFG<3:0>:** Analog-to-Digital Port Configuration Control bits

1 = Port pin is in Digital mode; port read input is enabled; Analog-to-Digital input multiplexer is connected to AVSS

0 = Port pin is in Analog mode; port read input is disabled; Analog-to-Digital samples pin voltage

Note 1: This bit is not implemented in dsPIC33FJ06GS102A/202A devices.

2: This bit is not implemented in dsPIC33FJ06GS001/101A devices.

REGISTER 19-5: ADCPC0: ADC CONVERT PAIR CONTROL REGISTER 0

R/W-0	R/W-0	R/W-0	R/W-0	R/W-0	R/W-0	R/W-0	R/W-0
IRQEN1	PEND1	SWTRG1	TRGSRC1<4:0>				
bit 15							bit 8

R/W-0	R/W-0	R/W-0	R/W-0	R/W-0	R/W-0	R/W-0	R/W-0
IRQEN0	PEND0	SWTRG0	TRGSRC0<4:0>				
bit 7							bit 0

Legend:			
R = Readable bit	W = Writable bit	U = Unimplemented bit, read as ‘0’	
-n = Value at POR	‘1’ = Bit is set	‘0’ = Bit is cleared	x = Bit is unknown

bit 15 **IRQEN1:** Interrupt Request Enable 1 bit
1 = Enables IRQ generation when requested conversion of channels AN3 and AN2 is completed
0 = IRQ is not generated

bit 14 **PEND1:** Pending Conversion Status 1 bit
1 = Conversion of channels AN3 and AN2 is pending; set when selected trigger is asserted
0 = Conversion is complete

bit 13 **SWTRG1:** Software Trigger 1 bit
1 = Starts conversion of AN3 and AN2 (if selected by the TRGSRCx bits)(1)
This bit is automatically cleared by hardware when the PEND1 bit is set.
0 = Conversion has not started

bit 12-8 **TRGSRC1<4:0>:** Trigger 1 Source Selection bits
Selects trigger source for conversion of analog channels AN3 and AN2.
11111 = Timer2 period match
•
•
•
11011 = Reserved
11010 = PWM Generator 4 current-limit ADC trigger
11001 = Reserved
11000 = PWM Generator 2 current-limit ADC trigger
10111 = PWM Generator 1 current-limit ADC trigger
10110 = Reserved
•
•
•
10010 = Reserved
10001 = PWM Generator 4 secondary trigger is selected
10000 = Reserved
01111 = PWM Generator 2 secondary trigger is selected
01110 = PWM Generator 1 secondary trigger is selected
01101 = Reserved
01100 = Timer1 period match
•
•
•
01000 = Reserved
00111 = PWM Generator 4 primary trigger is selected
00110 = Reserved
00101 = PWM Generator 2 primary trigger is selected
00100 = PWM Generator 1 primary trigger is selected
00011 = PWM Special Event Trigger is selected
00010 = Global software trigger is selected
00001 = Individual software trigger is selected
00000 = No conversion is enabled

Note 1: The trigger source must be set as a global software trigger prior to setting this bit to ‘1’. If other conversions are in progress, then conversion will be performed when the conversion resources are available.

© 2011-2012 Microchip Technology Inc.

REGISTER 19-5: ADCPC0: ADC CONVERT PAIR CONTROL REGISTER 0 (CONTINUED)

bit 7 **IRQEN0:** Interrupt Request Enable 0 bit
1 = Enables IRQ generation when requested conversion of channels AN1 and AN0 is completed
0 = IRQ is not generated

bit 6 **PEND0:** Pending Conversion Status 0 bit
1 = Conversion of channels AN1 and AN0 is pending; set when selected trigger is asserted
0 = Conversion is complete

bit 5 **SWTRG0:** Software Trigger 0 bit
1 = Starts conversion of AN1 and AN0 (if selected by the TRGSRCx bits)[(1)]
This bit is automatically cleared by hardware when the PEND0 bit is set.
0 = Conversion has not started

bit 4-0 **TRGSRC0<4:0>:** Trigger 0 Source Selection bits
Selects trigger source for conversion of analog channels AN1 and AN0.
11111 = Timer2 period match
•
•
•
11011 = Reserved
11010 = PWM Generator 4 current-limit ADC trigger
11001 = Reserved
11000 = PWM Generator 2 current-limit ADC trigger
10111 = PWM Generator 1 current-limit ADC trigger
10110 = Reserved
•
•
•
10010 = Reserved
10001 = PWM Generator 4 secondary trigger is selected
10000 = Reserved
01111 = PWM Generator 2 secondary trigger is selected
01110 = PWM Generator 1 secondary trigger is selected
01101 = Reserved
01100 = Timer1 period match
•
•
•
01000 = Reserved
00111 = PWM Generator 4 primary trigger is selected
00110 = Reserved
00101 = PWM Generator 2 primary trigger is selected
00100 = PWM Generator 1 primary trigger is selected
00011 = PWM Special Event Trigger is selected
00010 = Global software trigger is selected
00001 = Individual software trigger is selected
00000 = No conversion is enabled

Note 1: The trigger source must be set as a global software trigger prior to setting this bit to '1'. If other conversions are in progress, then conversion will be performed when the conversion resources are available.

REGISTER 19-6: ADCPC1: ADC CONVERT PAIR CONTROL REGISTER 1

R/W-0	R/W-0	R/W-0	R/W-0	R/W-0	R/W-0	R/W-0	R/W-0
IRQEN3(1)	PEND3(1)	SWTRG3(1)	TRGSRC3<4:0>(1)				
bit 15							bit 8

R/W-0	R/W-0	R/W-0	R/W-0	R/W-0	R/W-0	R/W-0	R/W-0
IRQEN2(2)	PEND2(2)	SWTRG2(2)	TRGSRC2<4:0>(2)				
bit 7							bit 0

Legend:			
R = Readable bit	W = Writable bit	U = Unimplemented bit, read as ‘0’	
-n = Value at POR	‘1’ = Bit is set	‘0’ = Bit is cleared	x = Bit is unknown

bit 15 **IRQEN3:** Interrupt Request Enable 3 bit(1)
1 = Enables IRQ generation when requested conversion of channels AN7 and AN6 is completed
0 = IRQ is not generated

bit 14 **PEND3:** Pending Conversion Status 3 bit(1)
1 = Conversion of channels AN7 and AN6 is pending; set when selected trigger is asserted
0 = Conversion is complete

bit 13 **SWTRG3:** Software Trigger 3 bit(1)
1 = Starts conversion of AN7 and AN6 (if selected by the TRGSRCx bits)(3)
This bit is automatically cleared by hardware when the PEND3 bit is set.
0 = Conversion has not started

bit 12-8 **TRGSRC3<4:0>:** Trigger 3 Source Selection bits(1)
Selects trigger source for conversion of analog channels AN7 and AN6.
11111 = Timer2 period match
•
•
•
11011 = Reserved
11010 = PWM Generator 4 current-limit ADC trigger
11001 = Reserved
11000 = PWM Generator 2 current-limit ADC trigger
10111 = PWM Generator 1 current-limit ADC trigger
10110 = Reserved
•
•
•
10010 = Reserved
10001 = PWM Generator 4 secondary trigger is selected
10000 = Reserved
01111 = PWM Generator 2 secondary trigger is selected
01110 = PWM Generator 1 secondary trigger is selected
01101 = Reserved
01100 = Timer1 period match
•
•
•
01000 = Reserved
00111 = PWM Generator 4 primary trigger is selected
00110 = Reserved
00101 = PWM Generator 2 primary trigger is selected
00100 = PWM Generator 1 primary trigger is selected
00011 = PWM Special Event Trigger is selected
00010 = Global software trigger is selected
00001 = Individual software trigger is selected
00000 = No conversion is enabled

Note 1: This bit is available in dsPIC33FJ06GS001/101A and dsPIC33FJ09GS302 devices only.
2: This bit is available in dsPIC33FJ06GS102A/201A and dsPIC33FJ09GS302 devices only.
3: The trigger source must be set as a global software trigger prior to setting this bit to ‘1’. If other conversions are in progress, conversion will be performed when the conversion resources are available.

© 2011-2012 Microchip Technology Inc.

REGISTER 19-6: ADCPC1: ADC CONVERT PAIR CONTROL REGISTER 1 (CONTINUED)

bit 7 **IRQEN2:** Interrupt Request Enable 2 bit(2)
1 = Enables IRQ generation when requested conversion of channels AN5 and AN4 is completed
0 = IRQ is not generated

bit 6 **PEND2:** Pending Conversion Status 2 bit(2)
1 = Conversion of channels AN5 and AN4 is pending; set when selected trigger is asserted.
0 = Conversion is complete

bit 5 **SWTRG2:** Software Trigger 2 bit(2)
1 = Starts conversion of AN5 and AN4 (if selected by the TRGSRCx bits)(3)
This bit is automatically cleared by hardware when the PEND2 bit is set.
0 = Conversion has not started

bit 4-0 **TRGSRC2<4:0>:** Trigger 2 Source Selection bits(2)
Selects trigger source for conversion of analog channels AN5 and AN4.
11111 = Timer2 period match
•
•
•
11011 = Reserved
11010 = PWM Generator 4 current-limit ADC trigger
11001 = Reserved
11000 = PWM Generator 2 current-limit ADC trigger
10111 = PWM Generator 1 current-limit ADC trigger
10110 = Reserved
•
•
•
10010 = Reserved
10001 = PWM Generator 4 secondary trigger is selected
10000 = Reserved
01111 = PWM Generator 2 secondary trigger is selected
01110 = PWM Generator 1 secondary trigger is selected
01101 = Reserved
01100 = Timer1 period match
•
•
•
01000 = Reserved
00111 = PWM Generator 4 primary trigger is selected
00110 = Reserved
00101 = PWM Generator 2 primary trigger is selected
00100 = PWM Generator 1 primary trigger is selected
00011 = PWM Special Event Trigger is selected
00010 = Global software trigger is selected
00001 = Individual software trigger is selected
00000 = No conversion is enabled

Note 1: This bit is available in dsPIC33FJ06GS001/101A and dsPIC33FJ09GS302 devices only.
2: This bit is available in dsPIC33FJ06GS102A/201A and dsPIC33FJ09GS302 devices only.
3: The trigger source must be set as a global software trigger prior to setting this bit to '1'. If other conversions are in progress, conversion will be performed when the conversion resources are available.

REGISTER 19-7: ADCPC3: ADC CONVERT PAIR CONTROL REGISTER 3[1]

U-0	U-0	U-0	U-0	U-0	U-0	U-0	U-0
—	—	—	—	—	—	—	—
bit 15							bit 8

R/W-0	R/W-0	R/W-0	R/W-0	R/W-0	R/W-0	R/W-0	R/W-0
IRQEN6	PEND6	SWTRG6	TRGSRC6<4:0>				
bit 7							bit 0

Legend:			
R = Readable bit	W = Writable bit	U = Unimplemented bit, read as ‘0’	
-n = Value at POR	‘1’ = Bit is set	‘0’ = Bit is cleared	x = Bit is unknown

bit 15-8 **Unimplemented:** Read as ‘0’

bit 7 **IRQEN6:** Interrupt Request Enable 6 bit
1 = Enable IRQ generation when requested conversion of channels AN13 and AN12 is completed
0 = IRQ is not generated

bit 6 **PEND6:** Pending Conversion Status 6 bit
1 = Conversion of channels AN13 and AN 12 is pending; set when selected trigger is asserted
0 = Conversion is complete

bit 5 **SWTRG6:** Software Trigger 6 bit
1 = Starts conversion of AN13 (INTREF) and AN12 (EXTREF) if selected by TRGSRC bits[2]
This bit is automatically cleared by hardware when the PEND6 bit is set.
0 = Conversion has not started

Note 1: If other conversions are in progress, conversion will be performed when the conversion resources are available.

2: AN13 is internally connected to Vref in all devices. AN12 is internally connected to the EXTREF pin in the dsPIC33FJ06001/202A and dsPIC33FJ09GS302 devices. The dsPIC33FJ06GS101A/102A devices not have an EXTREF pin; therefore, any data read on the corresponding AN12 input will be invalid.

© 2011-2012 Microchip Technology Inc.

REGISTER 19-7: ADCPC3: ADC CONVERT PAIR CONTROL REGISTER 3[1] (CONTINUED)

bit 4-0 **TRGSRC6<4:0>:** Trigger 6 Source Selection bits

Selects trigger source for conversion of analog channels AN13 and AN12.

`11111` = Timer2 period match
•
•
•
`11011` = Reserved
`11010` = PWM Generator 4 current-limit ADC trigger
`11001` = Reserved
`11000` = PWM Generator 2 current-limit ADC trigger
`10111` = PWM Generator 1 current-limit ADC trigger
`10110` = Reserved
•
•
•
`10010` = Reserved
`10001` = PWM Generator 4 secondary trigger is selected
`10000` = Reserved
`01111` = PWM Generator 2 secondary trigger is selected
`01110` = PWM Generator 1 secondary trigger is selected
`01101` = Reserved
`01100` = Timer1 period match
•
•
•
`01000` = Reserved
`00111` = PWM Generator 4 primary trigger is selected
`00110` = Reserved
`00101` = PWM Generator 2 primary trigger is selected
`00100` = PWM Generator 1 primary trigger is selected
`00011` = PWM Special Event Trigger is selected
`00010` = Global software trigger is selected
`00001` = Individual software trigger is selected
`00000` = No conversion is enabled

Note 1: If other conversions are in progress, conversion will be performed when the conversion resources are available.

2: AN13 is internally connected to Vref in all devices. AN12 is internally connected to the EXTREF pin in the dsPIC33FJ06001/202A and dsPIC33FJ09GS302 devices. The dsPIC33FJ06GS101A/102A devices not have an EXTREF pin; therefore, any data read on the corresponding AN12 input will be invalid.

NOTES:

© 2011-2012 Microchip Technology Inc.

20.0 HIGH-SPEED ANALOG COMPARATOR

Note 1: This data sheet summarizes the features of the dsPIC33FJ06GS001/101A/102A/202A and dsPIC33FJ09GS302 families of devices. It is not intended to be a comprehensive reference source. To complement the information in this data sheet, refer to **Section 45. "High-Speed Analog Comparator"** (DS70296) in the *"dsPIC33F/PIC24H Family Reference Manual"*, which is available on the Microchip web site (www.microchip.com).

2: Some registers and associated bits described in this section may not be available on all devices. Refer to **Section 4.0 "Memory Organization"** in this data sheet for device-specific register and bit information.

The high-speed analog comparator module monitors current and/or voltage transients that may be too fast for the CPU and ADC to capture.

20.1 Features Overview

The SMPS comparator module offers the following major features:

- Eight selectable comparator inputs
- Up to two analog comparators
- 10-bit DAC for each analog comparator
- Programmable output polarity
- Interrupt generation capability
- DACOUT pin to provide DAC output
- DACOUT amplifier (1x, 1.8x)
- Selectable hysteresis
- DAC has three ranges of operation:
  - AVDD/2
  - Internal Reference (INTREF)
  - External Reference (EXTREF)
- ADC sample and convert trigger capability
- Disable capability reduces power consumption
- Functional support for PWM module:
  - PWM duty cycle control
  - PWM period control
  - PWM Fault detect

20.2 Module Description

Figure 20-1 shows a functional block diagram of one analog comparator from the high-speed analog comparator module. The analog comparator provides high-speed operation with a typical delay of 20 ns. The comparator has a typical offset voltage of ±5 mV. The negative input of the comparator is always connected to the DAC circuit. The positive input of the comparator is connected to an analog multiplexer that selects the desired source pin.

The analog comparator input pins are typically shared with pins used by the Analog-to-Digital Converter (ADC) module. Both the comparator and the ADC can use the same pins at the same time. This capability enables a user to measure an input voltage with the ADC and detect voltage transients with the comparator.

FIGURE 20-1: HIGH-SPEED ANALOG COMPARATOR MODULE BLOCK DIAGRAM

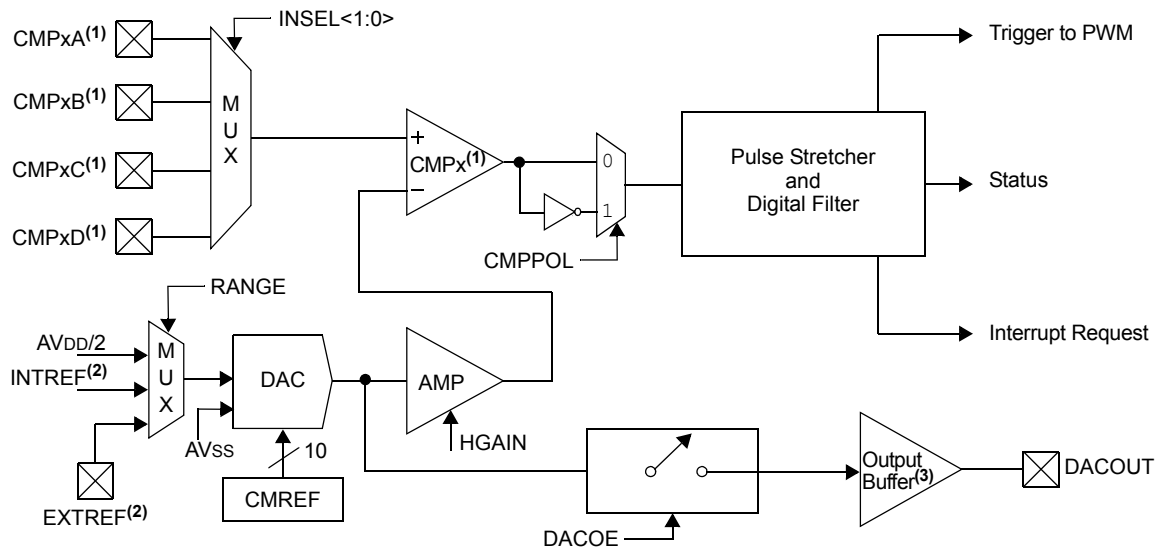

Note 1: x = 1 and 2.

2: For the INTREF and EXTREF values, refer to the DAC Module Specifications (Table 25-42) in **Section 25.0 "Electrical Characteristics"**.

3: The output buffer is shared between the DACs and only one DAC can be enabled to drive this buffer.

20.3 Module Applications

This module provides a means for the SMPS dsPIC DSC devices to monitor voltage and currents in a power conversion application. The ability to detect transient conditions and stimulate the dsPIC DSC processor and/or peripherals, without requiring the processor and ADC to constantly monitor voltages or currents, frees the dsPIC DSC to perform other tasks.

The comparator module has a high-speed comparator, an associated 10-bit DAC and a DAC output amplifier that provide a programmable reference voltage to the inverting input of the comparator. The polarity of the comparator output is user-programmable. The output of the module can be used in the following modes:

- Generate an Interrupt
- Trigger an ADC Sample and Convert Process
- Truncate the PWM Signal (current limit)
- Truncate the PWM Period (current minimum)
- Disable the PWM Outputs (Fault latch)

The output of the comparator module may be used in multiple modes at the same time, such as: 1) generate an interrupt, 2) have the ADC take a sample and convert it, and 3) truncate the PWM output in response to a voltage being detected beyond its expected value.

The comparator module can also be used to wake-up the system from Sleep or Idle mode when the analog input voltage exceeds the programmed threshold voltage.

20.4 DAC

The range of the DAC is controlled via an analog multiplexer that selects either AVDD/2, an internal reference source, INTREF, or an external reference source, EXTREF. The full range of the DAC (AVDD/2) will typically be used when the chosen input source pin is shared with the ADC. The reduced range option (INTREF) will likely be used when monitoring current levels using a current sense resistor. Usually, the measured voltages in such applications are small (<1.25V); therefore, the option of using a reduced reference range for the comparator extends the available DAC resolution in these applications. The use of an external reference enables the user to connect to a reference that better suits their application.

DACOUT, shown in Figure 20-1, can only be associated with a single comparator at a given time.

Note:	It should be ensured in software that multiple DACOE bits are not set. The output on the DACOUT pin will be indeterminate if multiple comparators enable the DAC output.

20.5 DAC Buffer Gain

The output of the DAC is buffered/amplified via the DAC buffer. The block functions as a 1x gain amplifier or as a 1.8x gain amplifier. The gain selection is controlled via the HGAIN bit in the CMPCONx register. Using the 1.8x gain option will raise the reference voltage to the analog comparator to a maximum of 2.8V. Using a higher reference voltage for the analog comparator can improve the signal-to-noise ratio in an application.

20.6 Comparator Input Range

The comparator has an input voltage range from -0.2V to AVDD + 0.2V, making it a rail-to-rail input.

20.7 Digital Logic

The CMPCONx register (see Register 20-1) provides the control logic that configures the High-Speed Analog Comparator module. The digital logic provides a pulse stretcher. The analog comparator can respond to very fast transient signals. After the comparator output is given the desired polarity, the signal is passed to this pulse stretching circuit. The pulse stretching circuit has an asynchronous set function and a delay circuit that insure the minimum pulse width is three system clock cycles wide so that the attached circuitry can properly respond.

The stretch circuit is followed by a digital filter. The digital filter is enabled via the FLTREN bit in the CMPCONx register. The digital filter operates with the clock specified via the FCLKSEL bit in the CMPCONx register. The comparator signal must be stable in a high or low state for at least three of the selected clock cycles for it to pass through the digital filter.

During Sleep mode, the clock signal inputs to the module are disabled. However, the module's analog components may continue to function in a reduced power manner to allow the user to wake-up the device when a signal is applied to a comparator input.

In Sleep mode, the clocks are stopped; however, the analog comparator signal has an asynchronous connection across the filter that allows interrupts to be generated regardless of the stopped clocks.

The comparator can be disabled while in Idle mode if the CMPSIDL bit is set. If a device has multiple comparators, and any CMPSIDL bit is set, the entire group of comparators will be disabled while in Idle mode. The advantage is reduced power consumption. Moreover, this behavior reduces complexity in the design of the clock control logic for this module.

© 2011-2012 Microchip Technology Inc.

20.8 Hysteresis

An additional feature of the module is hysteresis control. Hysteresis can be enabled or disabled and its amplitude can be controlled by the HYSSEL<1:0> bits in the CMPCONx register. Three different values are available: 15 mV, 30 mV and 45 mV. It is also possible to select the edge (rising or falling) to which hysteresis is to be applied.

Hysteresis control prevents the comparator output from continuously changing state because of small perturbations (noise) at the input (see Figure 20-2).

FIGURE 20-2: HYSTERESIS CONTROL

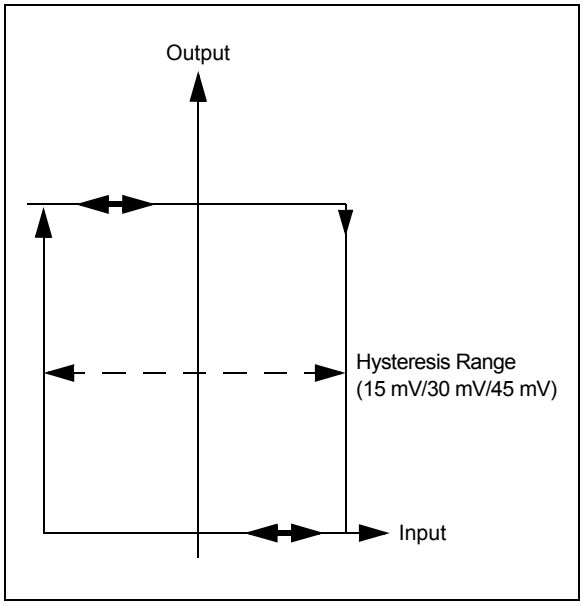

20.9 Interaction with I/O Buffers

If the module is enabled and a pin has been selected as the source for the comparator, then the chosen I/O pad must disable the digital input buffer associated with the pad to prevent excessive currents in the digital buffer due to analog input voltages.

20.10 DAC Output Range

The DAC has a limitation for the maximum reference voltage input of (AV_{DD} – 1.5) volts. An external reference voltage input should not exceed this value or the reference DAC output will become indeterminate.

20.11 Analog Comparator Registers

The high-speed analog comparator module is controlled by the following registers:

- CMPCONx: Comparator Control x Register
- CMPDACx: Comparator DAC Control x Register

REGISTER 20-1: CMPCONx: COMPARATOR CONTROL x REGISTER

R/W-0	U-0	R/W-0	R/W-0	R/W-0	R/W-0	R/W-0	R/W-0
CMPON(1)	—	CMPSIDL(1)	HYSSEL<1:0>(1)		FLTREN(1)	FCLKSEL(1)	DACOE(1)
bit 15							bit 8

R/W-0	R/W-0	R/W-0	R/W-0	R/W-0	R/W-0	R/W-0	R/W-0
INSEL<1:0>(1)		EXTREF(1)	HYSPOL(1)	CMPSTAT(1)	HGAIN(1)	CMPPOL(1)	RANGE(1)
bit 7							bit 0

Legend:			
R = Readable bit	W = Writable bit	U = Unimplemented bit, read as ‘0’	
-n = Value at POR	‘1’ = Bit is set	‘0’ = Bit is cleared	x = Bit is unknown

bit 15 **CMPON:** Comparator Operating Mode bit(1)
1 = Comparator module is enabled
0 = Comparator module is disabled (reduces power consumption)

bit 14 **Unimplemented:** Read as ‘0’

bit 13 **CMPSIDL:** Stop in Idle Mode bit(1)
1 = Discontinues module operation when device enters Idle mode.
0 = Continues module operation in Idle mode
If a device has multiple comparators, any CMPSIDL bit that is set to ‘1’ disables *all* comparators while in Idle mode.

bit 12-11 **HYSSEL<1:0>:** Comparator Hysteresis Select bits(1)
11 = 45 mV hysteresis
10 = 30 mV hysteresis
01 = 15 mV hysteresis
00 = No hysteresis is selected

bit 10 **FLTREN:** Digital Filter Enable bit(1)
1 = Digital filter is enabled
0 = Digital filter is disabled

bit 9 **FCLKSEL:** Digital Filter and Pulse Stretcher Clock Select bit(1)
1 = Digital filter and pulse stretcher operate with the PWM clock
0 = Digital filter and pulse stretcher operate with the system clock

bit 8 **DACOE:** DAC Output Enable(1)
1 = DAC analog voltage is output to DACOUT pin(2)
0 = DAC analog voltage is not connected to DACOUT pin

bit 7-6 **INSEL<1:0>:** Input Source Select for Comparator bits(1)
11 = Select CMPxD input pin
10 = Select CMPxC input pin
01 = Select CMPxB input pin
00 = Select CMPxA input pin

Note 1: This bit is not implemented in dsPIC33FJ06GS101A/102A devices.
2: DACOUT can be associated only with a single comparator at any given time. The software must ensure that multiple comparators do not enable the DAC output by setting their respective DACOE bit.
3: For the INTREF value, refer to the DAC Module Specifications (Table 25-42) in **Section 25.0 “Electrical Characteristics”**.

© 2011-2012 Microchip Technology Inc.

REGISTER 20-1: CMPCONx: COMPARATOR CONTROL x REGISTER (CONTINUED)

bit 5 **EXTREF:** Enable External Reference bit(1)

1 = External source provides reference to DAC (maximum DAC voltage determined by external voltage source)

0 = Internal reference sources provide reference to DAC (maximum DAC voltage determined by RANGE bit setting)

bit 4 **HYSPOL:** Comparator Hysteresis Polarity Select bit(1)

1 = Hysteresis is applied to the falling edge of the comparator output

0 = Hysteresis is applied to the rising edge of the comparator output

bit 3 **CMPSTAT:** Current State of Comparator Output Including CMPPOL Selection bit(1)

bit 2 **HGAIN:** DAC Gain Enable bit(1)

1 = Reference DAC output to comparator is scaled at 1.8x

0 = Reference DAC output to comparator is scaled at 1.0x

bit 1 **CMPPOL:** Comparator Output Polarity Control bit(1)

1 = Output is inverted

0 = Output is non-inverted

bit 0 **RANGE:** Selects DAC Output Voltage Range bit(1)

1 = High Range: Max DAC Value = AV_{DD}/2, 1.65V at 3.3V AV_{DD}

0 = Low Range: Max DAC Value = INTREF(3)

Note 1: This bit is not implemented in dsPIC33FJ06GS101A/102A devices.

2: DACOUT can be associated only with a single comparator at any given time. The software must ensure that multiple comparators do not enable the DAC output by setting their respective DACOE bit.

3: For the INTREF value, refer to the DAC Module Specifications (Table 25-42) in **Section 25.0 "Electrical Characteristics"**.

REGISTER 20-2: CMPDACx: COMPARATOR DAC CONTROL x REGISTER

U-0	U-0	U-0	U-0	U-0	U-0	R/W-0	R/W-0
—	—	—	—	—	—	CMREF<9:8>(1)	
bit 15							bit 8

R/W-0	R/W-0	R/W-0	R/W-0	R/W-0	R/W-0	R/W-0	R/W-0
CMREF<7:0>(1)							
bit 7							bit 0

Legend:			
R = Readable bit	W = Writable bit	U = Unimplemented bit, read as ‘0’	
-n = Value at POR	‘1’ = Bit is set	‘0’ = Bit is cleared	x = Bit is unknown

bit 15-10 **Unimplemented:** Read as ‘0’

bit 9-0 **CMREF<9:0>:** Comparator Reference Voltage Select bits(1)

1111111111 = (CMREF * INTREF/1024) or (CMREF * (AVDD/2)/1024) volts depending on RANGE bit or (CMREF * EXTREF/1024) if EXTREF is set

•

•

•

0000000000 = 0.0 volts

Note 1: These bits are not implemented in dsPIC33FJ06GS101A/102A devices.

© 2011-2012 Microchip Technology Inc.

21.0 CONSTANT CURRENT SOURCE

Note 1: This data sheet summarizes the features of the dsPIC33FJ06GS001/101A/102A/202A and dsPIC33FJ09GS302 families of devices. It is not intended to be a comprehensive reference source. To complement the information in this data sheet, refer to **Section 19. "Inter-Integrated Circuit (I^2C™)"** (DS70195) in the *"dsPIC33F/PIC24H Family Reference Manual"*, which is available on the Microchip web site (www.microchip.com).

2: Some registers and associated bits described in this section may not be available on all devices. Refer to **Section 4.0 "Memory Organization"** in this data sheet for device-specific register and bit information.

The constant current source module is a precision current generator and is used in conjunction with ADC to measure the resistance of external resistors connected to device pins.

21.1 Features Overview

The constant current source module offers the following major features:

- Constant current generator (10 µA nominal)
- Internal selectable connection to one out of four pins
- Enable/disable bit

21.2 Module Description

Figure 21-1 shows a functional block diagram of the constant current source module. It consists of a precision current generator with a nominal value of 10 µA. The module can be enabled and disabled using the ISRCEN bit in the ISRCCON register. The output of the current generator is internally connected to one out of up to 4 pins. The OUTSEL<2:0> bits in the ISRCCON register allow selection of the target pin.

The current source is calibrated during testing.

FIGURE 21-1: CONSTANT CURRENT SOURCE MODULE BLOCK DIAGRAM

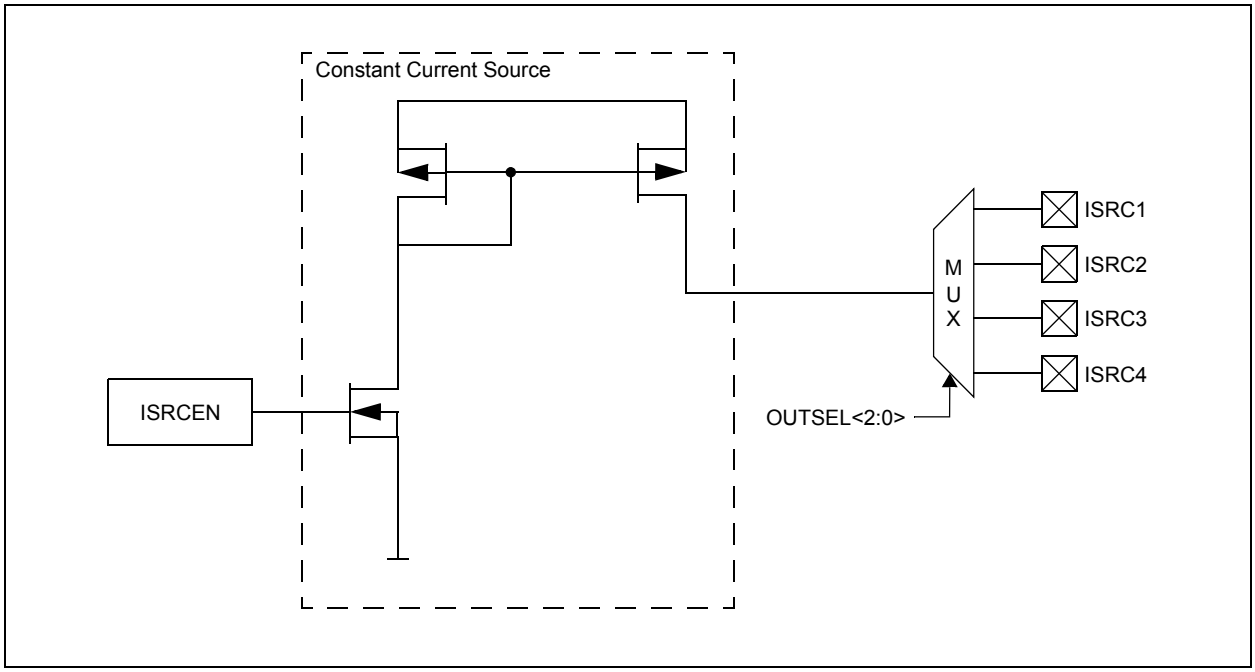

21.3 Current Source Control Register

REGISTER 21-1: ISRCCON: CONSTANT CURRENT SOURCE CONTROL REGISTER[1]

R/W-0	U-0	U-0	U-0	U-0	R/W-0	R/W-0	R/W-0
ISRCEN	—	—	—	—	OUTSEL<2:0>		
bit 15							bit 8

U-0	U-0	R-0	R-0	R-0	R-0	R-0	R-0
—	—	ISRCCAL<5:0>					
bit 7							bit 0

Legend:			
R = Readable bit	W = Writable bit	U = Unimplemented bit, read as ‘0’	
-n = Value at POR	‘1’ = Bit is set	‘0’ = Bit is cleared	x = Bit is unknown

bit 15 **ISRCEN:** Current Source Enable bit
`1` = Current source is enabled
`0` = Current source is disabled

bit 14-11 **Unimplemented:** Read as ‘`0`’

bit 10-8 **OUTSEL<2:0>:** Output Current Select bits
`111` = Reserved
`110` = Reserved
`101` = Reserved
`100` = Select input pin, ISRC4 (AN4)
`011` = Select input pin, ISRC3 (AN5)
`010` = Select input pin, ISRC2 (AN6)
`001` = Select input pin, ISRC1 (AN7)
`000` = No output is selected

bit 7-6 **Unimplemented:** Read as ‘`0`’

bit 5-0 **ISRCCAL<5:0>:** Current Source Calibration bits
The calibration value must be copied from Flash address, 0x800840, into these bits. Refer to the Constant Current Source Calibration Register (Register 22-1) in **Section 22.0 “Special Features”** for more information.

Note 1: This register is available in the dsPIC33FJ09GS302 device only.

© 2011-2012 Microchip Technology Inc.

22.0 SPECIAL FEATURES

Note 1: This data sheet summarizes the features of the dsPIC33FJ06GS001/101A/102A/202A and dsPIC33FJ09GS302 devices. It is not intended to be a comprehensive reference source. To complement the information in this data sheet, refer to **Section 24. "Programming and Diagnostics"** (DS70207) and **Section 25. "Device Configuration"** (DS70194) in the *"dsPIC33F/PIC24H Family Reference Manual"*, which are available from the Microchip web site (www.microchip.com).

2: Some registers and associated bits described in this section may not be available on all devices. Refer to **Section 4.0 "Memory Organization"** in this data sheet for device-specific register and bit information.

The dsPIC33FJ06GS001/101A/102A/202A and dsPIC33FJ09GS302 family of devices includes several features that are included to maximize application flexibility and reliability, and minimize cost through elimination of external components. These features are:

- Flexible Configuration
- Watchdog Timer (WDT)
- Code Protection
- JTAG Boundary Scan Interface
- In-Circuit Serial Programming™ (ICSP™)
- In-Circuit Emulation
- Brown-out Reset (BOR)

22.1 Configuration Bits

The configuration bytes are implemented as volatile memory. This means that configuration data must be programmed each time the device is powered up. Configuration data is stored in the words at the top of the on-chip program memory space, known as the Flash Configuration Words. Their specific locations are shown in Table 22-1 and Table 22-2. The configuration data is automatically loaded from the Flash Configuration Words to the proper Configuration registers during device Resets.

Note: Configuration data is reloaded on all types of device Resets.

When creating applications for these devices, users should always specifically allocate the location of the Flash Configuration byte for configuration data. This is to make certain that program code is not stored in this address when the code is compiled.

The upper 2 bytes of all Flash Configuration Words in program memory should always be '`1111 1111 1111 1111`'. This makes them appear to be `NOP` instructions in the remote event that their locations are ever executed by accident. Since Configuration bits are not implemented in the corresponding locations, writing '`1`'s to these locations has no effect on device operation.

Note: Performing a page erase operation on the last page of program memory, clears the Flash Configuration Words, enabling code protection as a result. Therefore, users should avoid performing page erase operations on the last page of program memory

The Configuration Flash Byte maps are shown in Table 22-1 and Table 22-2.

The Constant Current Source Calibration register is shown in Register 22-1.

TABLE 22-1: CONFIGURATION FLASH BYTES FOR dsPIC33FJ06GS001/101A/X02A DEVICES

Address	Name	Bits 23-8	Bit 7	Bit 6	Bit 5	Bit 4	Bit 3	Bit 2	Bit 1	Bit 0
000FF0	FICD	—	Reserved(1)	—	JTAGEN	Reserved(2)	—	—	ICS<1:0>	
000FF4	FWDT	—	FWDTEN	—	PLLKEN	WDTPRE	WDTPOST<3:0>			
000FF6	FOSC	—	FCKSM<1:0>		IOL1WAY	—	—	OSCIOFNC	POSCMD<1:0>	
000FF8	FOSCSEL	—	IESO	—	—	—	—	FNOSC<2:0>		
000FFA	FGS	—	—	—	—	—	—	—	GCP	GWRP

Legend: — = unimplemented, read as '1'.
Note 1: This bit is reserved for use by development tools.
2: This bit is reserved; program as '0'.

TABLE 22-2: CONFIGURATION FLASH BYTES FOR dsPIC33FJ09GS302 DEVICES

Address	Name	Bits 23-8	Bit 7	Bit 6	Bit 5	Bit 4	Bit 3	Bit 2	Bit 1	Bit 0
0017F0	FICD	—	Reserved(1)	—	JTAGEN	Reserved(2)	—	—	ICS<1:0>	
0017F4	FWDT	—	FWDTEN	—	PLLKEN	WDTPRE	WDTPOST<3:0>			
0017F6	FOSC	—	FCKSM<1:0>		IOL1WAY	—	—	OSCIOFNC	POSCMD<1:0>	
0017F8	FOSCSEL	—	IESO	—	—	—	—	FNOSC<2:0>		
0017FA	FGS	—	—	—	—	—	—	—	GCP	GWRP

Legend: — = unimplemented, read as '1'.
Note 1: This bit is reserved for use by development tools.
2: This bit is reserved; program as '0'.

© 2011-2012 Microchip Technology Inc.

REGISTER 22-1: CONSTANT CURRENT SOURCE CALIBRATION REGISTER

U-0	U-0	U-0	U-0	U-0	U-0	U-0	U-0
—	—	—	—	—	—	—	—
bit 23							bit 16

U-0	U-0	U-0	U-0	U-0	U-0	U-0	U-0
—	—	—	—	—	—	—	—
bit 15							bit 8

U-0	U-0	R-0	R-0	R-0	R-0	R-0	R-0
—	—	CCSCAL<5:0>					
bit 7							bit 0

Legend:			
R = Readable bit	W = Writable bit	U = Unimplemented bit, read as ‘0’	
-n = Value at POR	‘1’ = Bit is set	‘0’ = Bit is cleared	x = Bit is unknown

bit 23-6 **Unimplemented:** Read as ‘0’

bit 5-0 **CCSCAL<5:0>:** Constant Current Source Calibration bits

The value of these bits must be copied into the ISRCCAL<5:0> bits (ISRCCON<5:0>). Refer to the Current Source Control register (Register 21-1) in **Section 21.0 “Constant Current Source”**.

TABLE 22-3: dsPIC33F CONFIGURATION BITS DESCRIPTION

Bit Field	Description
GCP	General Segment Code-Protect bit 1 = User program memory is not code-protected 0 = Code protection is enabled for the entire program memory space
GWRP	General Segment Write-Protect bit 1 = User program memory is not write-protected 0 = User program memory is write-protected
IESO	Two-Speed Oscillator Start-up Enable bit 1 = Start up device with FRC, then automatically switch to the user-selected oscillator source when ready 0 = Start up device with user-selected oscillator source
FNOSC<2:0>	Oscillator Selection bits 111 = Fast RC Oscillator with divide-by-N (FRCDIVN) 110 = Reserved; do not use 101 = Low-Power RC Oscillator (LPRC) 100 = Reserved; do not use 011 = Primary Oscillator with PLL module (MS + PLL, EC + PLL) 010 = Primary Oscillator (MS, HS, EC) 001 = Fast RC Oscillator with divide-by-N with PLL module (FRCDIVN + PLL) 000 = Fast RC Oscillator (FRC)
FCKSM<1:0>	Clock Switching Mode bits 1x = Clock switching is disabled, Fail-Safe Clock Monitor is disabled 01 = Clock switching is enabled, Fail-Safe Clock Monitor is disabled 00 = Clock switching is enabled, Fail-Safe Clock Monitor is enabled
IOL1WAY	Peripheral Pin Select Configuration bit 1 = Allow only one reconfiguration 0 = Allow multiple reconfigurations
OSCIOFNC	OSC2 Pin Function bit (except in MS and HS modes) 1 = OSC2 is the clock output 0 = OSC2 is the general purpose digital I/O pin
POSCMD<1:0>	Primary Oscillator Mode Select bits 11 = Primary Oscillator is disabled 10 = HS Crystal Oscillator mode (10 MHz-32 MHz) 01 = MS Crystal Oscillator mode (3 MHz-10 MHz) 00 = EC (External Clock) mode (DC-32 MHz)
FWDTEN	Watchdog Timer Enable bit 1 = Watchdog Timer is always enabled (LPRC oscillator cannot be disabled; clearing the SWDTEN bit in the RCON register will have no effect) 0 = Watchdog Timer is enabled/disabled by user software (LPRC can be disabled by clearing the SWDTEN bit in the RCON register)
WDTPRE	Watchdog Timer Prescaler bit 1 = 1:128 0 = 1:32
WDTPOST<3:0>	Watchdog Timer Postscaler bits 1111 = 1:32,768 1110 = 1:16,384 • • • 0001 = 1:2 0000 = 1:1

© 2011-2012 Microchip Technology Inc.

TABLE 22-3: dsPIC33F CONFIGURATION BITS DESCRIPTION (CONTINUED)

Bit Field	Description
PLLKEN	PLL Lock Enable bit 1 = Clock switch to PLL source will wait until the PLL lock signal is valid 0 = Clock switch will not wait for the PLL lock signal
JTAGEN	JTAG Enable bit 1 = JTAG is enabled 0 = JTAG is disabled
ICS<1:0>	ICD Communication Channel Select bits 11 = Communicate on PGEC1 and PGED1 10 = Communicate on PGEC2 and PGED2 01 = Communicate on PGEC3 and PGED3 00 = Reserved, do not use

22.2 On-Chip Voltage Regulator

The devices power their core digital logic at a nominal 2.5V. This can create a conflict for designs that are required to operate at a higher typical voltage, such as 3.3V. To simplify system design, all devices incorporate an on-chip regulator that allows the device to run its core logic from VDD.

The regulator provides power to the core from the other VDD pins. When the regulator is enabled, a low-ESR (less than 5 ohms) capacitor (such as tantalum or ceramic) must be connected to the VCAP pin (Figure 22-1). This helps to maintain the stability of the regulator. The recommended value for the filter capacitor is provided in Table 25-13, located in **Section 25.1 "DC Characteristics"**.

> **Note:** It is important for the low-ESR capacitor to be placed as close as possible to the VCAP pin.

On a POR, it takes approximately 20 µs for the on-chip voltage regulator to generate an output voltage. During this time, designated as TSTARTUP, code execution is disabled. TSTARTUP is applied every time the device resumes operation after any power-down.

FIGURE 22-1: CONNECTIONS FOR THE ON-CHIP VOLTAGE REGULATOR(1,2,3)

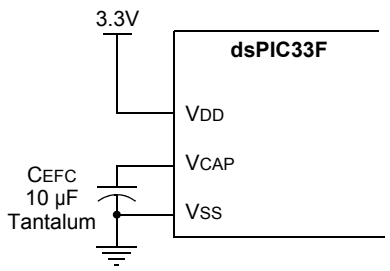

Note 1: These are typical operating voltages. Refer to Table 25-13 located in **Section 25.1 "DC Characteristics"** for the full operating ranges of VDD.

2: It is important for the low-ESR capacitor to be placed as close as possible to the VCAP pin.

3: Typical VCAP pin voltage = 2.5V when VDD ≥ VDDMIN.

22.3 Brown-out Reset (BOR)

The Brown-out Reset (BOR) module is based on an internal voltage reference circuit. The main purpose of the BOR module is to generate a device Reset when a brown-out condition occurs. Brown-out conditions are generally caused by glitches on the AC mains (for example, missing portions of the AC cycle waveform due to bad power transmission lines or voltage sags due to excessive current draw when a large inductive load is turned on).

A BOR generates a Reset pulse which resets the device. The BOR selects the clock source, based on the device Configuration bit values (FNOSC<2:0> and POSCMD<1:0>).

If an oscillator mode is selected, the BOR activates the Oscillator Start-up Timer (OST). The system clock is held until the OST expires. If the PLL is used, the clock is held until the LOCK bit (OSCCON<5>) is '1'.

Concurrently, the PWRT time-out (TPWRT) is applied before the internal Reset is released. If TPWRT = 0 and a crystal oscillator is being used, then a nominal delay of, TFSCM = 100, is applied. The total delay in this case is TFSCM.

The BOR status bit (RCON<1>) is set to indicate that a BOR has occurred. The BOR circuit continues to operate while in Sleep or Idle modes and resets the device should VDD fall below the BOR threshold voltage.

© 2011-2012 Microchip Technology Inc.

22.4 Watchdog Timer (WDT)

The Watchdog Timer (WDT) is driven by the LPRC oscillator. When the WDT is enabled, the clock source is also enabled.

22.4.1 PRESCALER/POSTSCALER

The nominal WDT clock source from LPRC is 32 kHz. This feeds a prescaler that can be configured for either 5-bit (divide-by-32) or 7-bit (divide-by-128) operation. The prescaler is set by the WDTPRE Configuration bit (FWDT<4>). With a 32 kHz input, the prescaler yields a nominal WDT time-out period (T_{WDT}) of 1 ms in 5-bit mode or 4 ms in 7-bit mode.

A variable postscaler divides down the WDT prescaler output and allows for a wide range of time-out periods. The postscaler is controlled by the WDTPOST<3:0> Configuration bits (FWDT<3:0>), which allow the selection of 16 settings, from 1:1 to 1:32,768. Using the prescaler and postscaler, time-out periods ranging from 1 ms to 131 seconds can be achieved.

The WDT, prescaler and postscaler are reset:

- On any device Reset
- On the completion of a clock switch, whether invoked by software (i.e., setting the OSWEN bit after changing the NOSC<2:0> bits) or by hardware (i.e., Fail-Safe Clock Monitor)
- When a `PWRSAV` instruction is executed (i.e., Sleep or Idle mode is entered)
- When the device exits Sleep or Idle mode to resume normal operation
- By a `CLRWDT` instruction during normal execution

Note:	The `CLRWDT` and `PWRSAV` instructions clear the prescaler and postscaler counts when executed.

22.4.2 SLEEP AND IDLE MODES

If the WDT is enabled, it will continue to run during Sleep or Idle modes. When the WDT time-out occurs, the device will wake the device and code execution will continue from where the `PWRSAV` instruction was executed. The corresponding SLEEP bit (RCON<3>) or IDLE bit (RCON<2>) will need to be cleared in software after the device wakes up.

22.4.3 ENABLING WDT

The WDT is enabled or disabled by the FWDTEN Configuration bit in the FWDT Configuration register (FWDT<7>). When the FWDTEN Configuration bit is set, the WDT is always enabled.

The WDT can be optionally controlled in software when the FWDTEN Configuration bit has been programmed to '`0`'. The WDT is enabled in software by setting the SWDTEN control bit (RCON<5>). The SWDTEN control bit is cleared on any device Reset. The software WDT option allows the user application to enable the WDT for critical code segments and disable the WDT during non-critical segments for maximum power savings.

The WDT flag bit, WDTO (RCON<4>), is not automatically cleared following a WDT time-out. To detect subsequent WDT events, the flag must be cleared in software.

FIGURE 22-2: WDT BLOCK DIAGRAM

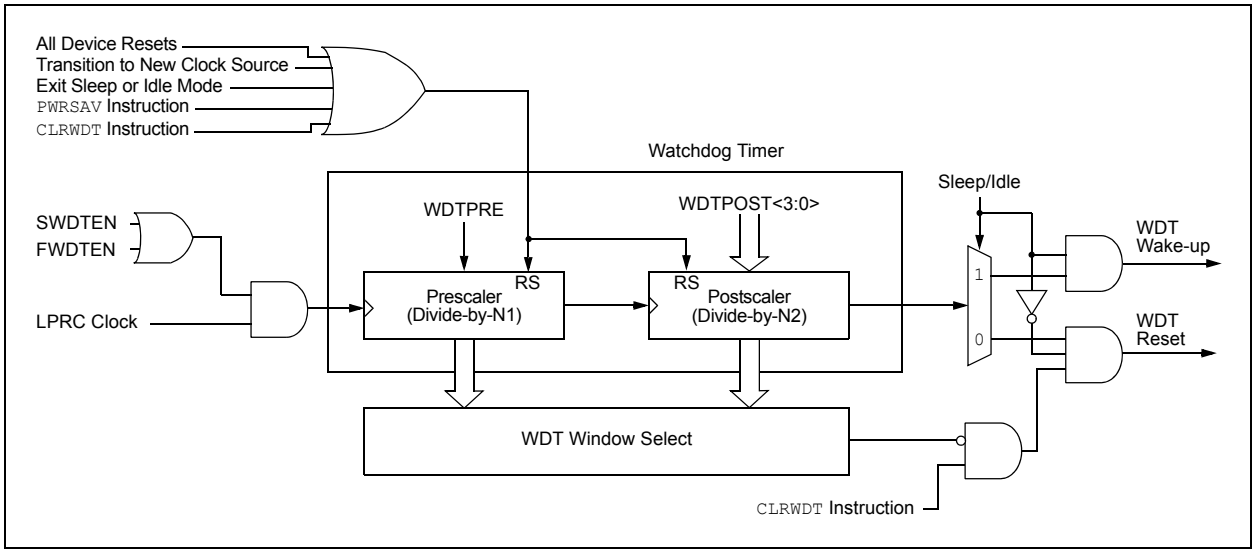

22.5 JTAG Interface

A JTAG interface is implemented, which supports boundary scan device testing, as well as in-circuit programming. Detailed information on this interface will be provided in future revisions of this document.

22.6 In-Circuit Serial Programming

The dsPIC33FJ06GS001/101A/102A/202A and dsPIC33FJ09GS302 family of digital signal controllers can be serially programmed while in the end application circuit. This is done with two lines for clock and data, and three other lines for power, ground and the programming sequence. Serial programming allows customers to manufacture boards with unprogrammed devices and then program the digital signal controller just before shipping the product. Serial programming also allows the most recent firmware or a custom firmware to be programmed. Refer to the *"dsPIC33F/PIC24H Flash Programming Specification"* (DS70152) for details about In-Circuit Serial Programming (ICSP™).

Any of the three pairs of programming clock/data pins can be used:

- PGEC1 and PGED1
- PGEC2 and PGED2
- PGEC3 and PGED3

22.7 In-Circuit Debugger

The dsPIC33FJ06GS001/101A/102A/202A and dsPIC33FJ09GS302 devices provide simple debugging functionality through the PGECx (Emulation/Debug Clock) and PGEDx (Emulation/Debug Data) pin functions.

Any of the three pairs of debugging clock/data pins can be used:

- PGEC1 and PGED1
- PGEC2 and PGED2
- PGEC3 and PGED3

To use the in-circuit debugger function of the device, the design must implement ICSP connections to $\overline{MCLR}$, V_{DD}, V_{SS} and the PGECx/PGEDx pin pair. In addition, when the feature is enabled, some of the resources are not available for general use. These resources include the first 80 bytes of data RAM and two I/O pins.

© 2011-2012 Microchip Technology Inc.

23.0 INSTRUCTION SET SUMMARY

Note: This data sheet summarizes the features of the dsPIC33FJ06GS001/101A/102A/202A and dsPIC33FJ09GS302 devices. It is not intended to be a comprehensive reference source. To complement the information in this data sheet, refer to the *"dsPIC33F/PIC24H Family Reference Manual"*. Please see the Microchip web site (www.microchip.com) for the latest *"dsPIC33F/PIC24H Family Reference Manual"* sections.

The instruction set for this family of dsPIC33F devices is identical to the instruction set for dsPIC30F devices.

Most instructions are a single program memory word (24 bits). Only three instructions require two program memory locations.

Each single-word instruction is a 24-bit word, divided into an 8-bit opcode, which specifies the instruction type and one or more operands, which further specify the operation of the instruction.

The instruction set is highly orthogonal and is grouped into five basic categories:

- Word or byte-oriented operations
- Bit-oriented operations
- Literal operations
- DSP operations
- Control operations

Table 23-1 shows the general symbols used in describing the instructions.

The dsPIC33F instruction set summary in Table 23-2 lists all the instructions, along with the status flags affected by each instruction.

Most word or byte-oriented W register instructions (including barrel shift instructions) have three operands:

- The first source operand, which is typically a register 'Wb' without any address modifier
- The second source operand, which is typically a register 'Ws' with or without an address modifier
- The destination of the result, which is typically a register 'Wd' with or without an address modifier

However, word or byte-oriented file register instructions have two operands:

- The file register specified by the value, 'f'
- The destination, which could be either the file register, 'f', or the W0 register, which is denoted as 'WREG'

Most bit-oriented instructions (including simple rotate/shift instructions) have two operands:

- The W register (with or without an address modifier) or file register (specified by the value of 'Ws' or 'f')
- The bit in the W register or file register (specified by a literal value or indirectly by the contents of register 'Wb')

The literal instructions that involve data movement can use some of the following operands:

- A literal value to be loaded into a W register or file register (specified by 'k')
- The W register or file register where the literal value is to be loaded (specified by 'Wb' or 'f')

However, literal instructions that involve arithmetic or logical operations use some of the following operands:

- The first source operand, which is a register 'Wb' without any address modifier
- The second source operand, which is a literal value
- The destination of the result (only if not the same as the first source operand), which is typically a register 'Wd' with or without an address modifier

The `MAC` class of DSP instructions can use some of the following operands:

- The accumulator (A or B) to be used (required operand)
- The W registers to be used as the two operands
- The X and Y address space prefetch operations
- The X and Y address space prefetch destinations
- The accumulator write-back destination

The other DSP instructions do not involve any multiplication and can include:

- The accumulator to be used (required)
- The source or destination operand (designated as Wso or Wdo, respectively) with or without an address modifier
- The amount of shift specified by a W register, 'Wn', or a literal value

The control instructions can use some of the following operands:

- A program memory address
- The mode of the table read and table write instructions

Most instructions are a single word. Certain double-word instructions are designed to provide all the required information in these 48 bits. In the second word, the 8 MSbs are '0's. If this second word is executed as an instruction (by itself), it will execute as a NOP.

The double-word instructions execute in two instruction cycles.

Most single-word instructions are executed in a single instruction cycle, unless a conditional test is true, or the Program Counter is changed as a result of the instruction. In these cases, the execution takes two instruction cycles with the additional instruction cycle(s) executed as a NOP. Notable exceptions are the BRA (unconditional/computed branch), indirect CALL/GOTO, all table reads and writes and RETURN/RETFIE instructions, which are single-word instructions but take two or three cycles. Certain instructions that involve skipping over the subsequent instruction require either two or three cycles if the skip is performed, depending on whether the instruction being skipped is a single-word or two-word instruction. Moreover, double-word moves require two cycles.

Note: For more details on the instruction set, refer to the *"16-Bit MCU and DSC Programmer's Reference Manual"* (DS70157).

TABLE 23-1: SYMBOLS USED IN OPCODE DESCRIPTIONS

Field	Description
#text	Means "literal defined by text"
(text)	Means "content of text"
[text]	Means "the location addressed by text"
{ }	Optional field or operation
<n:m>	Register bit field
.b	Byte mode selection
.d	Double-Word mode selection
.S	Shadow register select
.w	Word mode selection (default)
Acc	One of two accumulators {A, B}
AWB	Accumulator Write-Back Destination Address register ∈ {W13, [W13]+ = 2}
bit4	4-bit bit selection field (used in word-addressed instructions) ∈ {0...15}
C, DC, N, OV, Z	MCU Status bits: Carry, Digit Carry, Negative, Overflow, Sticky Zero
Expr	Absolute address, label or expression (resolved by the linker)
f	File register address ∈ {0x0000...0x1FFF}
lit1	1-bit unsigned literal ∈ {0,1}
lit4	4-bit unsigned literal ∈ {0...15}
lit5	5-bit unsigned literal ∈ {0...31}
lit8	8-bit unsigned literal ∈ {0...255}
lit10	10-bit unsigned literal ∈ {0...255} for Byte mode, {0:1023} for Word mode
lit14	14-bit unsigned literal ∈ {0...16384}
lit16	16-bit unsigned literal ∈ {0...65535}
lit23	23-bit unsigned literal ∈ {0...8388608}; LSb must be '0'
None	Field does not require an entry, can be blank
OA, OB, SA, SB	DSP Status bits: ACCA Overflow, ACCB Overflow, ACCA Saturate, ACCB Saturate
PC	Program Counter
Slit10	10-bit signed literal ∈ {-512...511}
Slit16	16-bit signed literal ∈ {-32768...32767}
Slit6	6-bit signed literal ∈ {-16...16}
Wb	Base W register ∈ {W0..W15}
Wd	Destination W register ∈ { Wd, [Wd], [Wd++], [Wd--], [++Wd], [--Wd] }
Wdo	Destination W register ∈ { Wnd, [Wnd], [Wnd++], [Wnd--], [++Wnd], [--Wnd], [Wnd+Wb] }
Wm,Wn	Dividend, Divisor Working register pair (Direct Addressing)

© 2011-2012 Microchip Technology Inc.

TABLE 23-1: SYMBOLS USED IN OPCODE DESCRIPTIONS (CONTINUED)

Field	Description
Wm*Wm	Multiplicand and Multiplier Working register pair for Square instructions ∈ {W4 * W4,W5 * W5,W6 * W6,W7 * W7}
Wm*Wn	Multiplicand and Multiplier Working register pair for DSP instructions ∈ {W4 * W5,W4 * W6,W4 * W7,W5 * W6,W5 * W7,W6 * W7}
Wn	One of 16 Working registers ∈ {W0..W15}
Wnd	One of 16 Destination Working registers ∈ {W0...W15}
Wns	One of 16 Source Working registers ∈ {W0...W15}
WREG	W0 (Working register used in file register instructions)
Ws	Source W register ∈ { Ws, [Ws], [Ws++], [Ws--], [++Ws], [--Ws] }
Wso	Source W register ∈ { Wns, [Wns], [Wns++], [Wns--], [++Wns], [--Wns], [Wns+Wb] }
Wx	X Data Space Prefetch Address register for DSP instructions ∈ {[W8] + = 6, [W8] + = 4, [W8] + = 2, [W8], [W8] - = 6, [W8] - = 4, [W8] - = 2, [W9] + = 6, [W9] + = 4, [W9] + = 2, [W9], [W9] - = 6, [W9] - = 4, [W9] - = 2, [W9 + W12], none}
Wxd	X Data Space Prefetch Destination register for DSP instructions ∈ {W4...W7}
Wy	Y Data Space Prefetch Address register for DSP instructions ∈ {[W10] + = 6, [W10] + = 4, [W10] + = 2, [W10], [W10] - = 6, [W10] - = 4, [W10] - = 2, [W11] + = 6, [W11] + = 4, [W11] + = 2, [W11], [W11] - = 6, [W11] - = 4, [W11] - = 2, [W11 + W12], none}
Wyd	Y Data Space Prefetch Destination register for DSP instructions ∈ {W4...W7}

TABLE 23-2: INSTRUCTION SET OVERVIEW

Base Instr #	Assembly Mnemonic	Assembly Syntax	Description	# of Words	# of Cycles	Status Flags Affected
1	ADD	ADD Acc	Add Accumulators	1	1	OA,OB,SA,SB
		ADD f	f = f + WREG	1	1	C,DC,N,OV,Z
		ADD f,WREG	WREG = f + WREG	1	1	C,DC,N,OV,Z
		ADD #lit10,Wn	Wd = lit10 + Wd	1	1	C,DC,N,OV,Z
		ADD Wb,Ws,Wd	Wd = Wb + Ws	1	1	C,DC,N,OV,Z
		ADD Wb,#lit5,Wd	Wd = Wb + lit5	1	1	C,DC,N,OV,Z
		ADD Wso,#Slit4,Acc	16-bit Signed Add to Accumulator	1	1	OA,OB,SA,SB
2	ADDC	ADDC f	f = f + WREG + (C)	1	1	C,DC,N,OV,Z
		ADDC f,WREG	WREG = f + WREG + (C)	1	1	C,DC,N,OV,Z
		ADDC #lit10,Wn	Wd = lit10 + Wd + (C)	1	1	C,DC,N,OV,Z
		ADDC Wb,Ws,Wd	Wd = Wb + Ws + (C)	1	1	C,DC,N,OV,Z
		ADDC Wb,#lit5,Wd	Wd = Wb + lit5 + (C)	1	1	C,DC,N,OV,Z
3	AND	AND f	f = f .AND. WREG	1	1	N,Z
		AND f,WREG	WREG = f .AND. WREG	1	1	N,Z
		AND #lit10,Wn	Wd = lit10 .AND. Wd	1	1	N,Z
		AND Wb,Ws,Wd	Wd = Wb .AND. Ws	1	1	N,Z
		AND Wb,#lit5,Wd	Wd = Wb .AND. lit5	1	1	N,Z
4	ASR	ASR f	f = Arithmetic Right Shift f	1	1	C,N,OV,Z
		ASR f,WREG	WREG = Arithmetic Right Shift f	1	1	C,N,OV,Z
		ASR Ws,Wd	Wd = Arithmetic Right Shift Ws	1	1	C,N,OV,Z
		ASR Wb,Wns,Wnd	Wnd = Arithmetic Right Shift Wb by Wns	1	1	N,Z
		ASR Wb,#lit5,Wnd	Wnd = Arithmetic Right Shift Wb by lit5	1	1	N,Z
5	BCLR	BCLR f,#bit4	Bit Clear f	1	1	None
		BCLR Ws,#bit4	Bit Clear Ws	1	1	None
6	BRA	BRA C,Expr	Branch if Carry	1	1 (2)	None
		BRA GE,Expr	Branch if Greater Than or Equal	1	1 (2)	None
		BRA GEU,Expr	Branch if Unsigned Greater Than or Equal	1	1 (2)	None
		BRA GT,Expr	Branch if Greater Than	1	1 (2)	None
		BRA GTU,Expr	Branch if Unsigned Greater Than	1	1 (2)	None
		BRA LE,Expr	Branch if Less Than or Equal	1	1 (2)	None
		BRA LEU,Expr	Branch if Unsigned Less Than or Equal	1	1 (2)	None
		BRA LT,Expr	Branch if Less Than	1	1 (2)	None
		BRA LTU,Expr	Branch if Unsigned Less Than	1	1 (2)	None
		BRA N,Expr	Branch if Negative	1	1 (2)	None
		BRA NC,Expr	Branch if Not Carry	1	1 (2)	None
		BRA NN,Expr	Branch if Not Negative	1	1 (2)	None
		BRA NOV,Expr	Branch if Not Overflow	1	1 (2)	None
		BRA NZ,Expr	Branch if Not Zero	1	1 (2)	None
		BRA OA,Expr	Branch if Accumulator A Overflow	1	1 (2)	None
		BRA OB,Expr	Branch if Accumulator B Overflow	1	1 (2)	None
		BRA OV,Expr	Branch if Overflow	1	1 (2)	None
		BRA SA,Expr	Branch if Accumulator A Saturated	1	1 (2)	None
		BRA SB,Expr	Branch if Accumulator B Saturated	1	1 (2)	None
		BRA Expr	Branch Unconditionally	1	2	None
		BRA Z,Expr	Branch if Zero	1	1 (2)	None
		BRA Wn	Computed Branch	1	2	None
7	BSET	BSET f,#bit4	Bit Set f	1	1	None
		BSET Ws,#bit4	Bit Set Ws	1	1	None
8	BSW	BSW.C Ws,Wb	Write C bit to Ws<Wb>	1	1	None
		BSW.Z Ws,Wb	Write Z bit to Ws<Wb>	1	1	None
9	BTG	BTG f,#bit4	Bit Toggle f	1	1	None
		BTG Ws,#bit4	Bit Toggle Ws	1	1	None

© 2011-2012 Microchip Technology Inc.

TABLE 23-2: INSTRUCTION SET OVERVIEW (CONTINUED)

Base Instr #	Assembly Mnemonic	Assembly Syntax	Description	# of Words	# of Cycles	Status Flags Affected
10	BTSC	BTSC f,#bit4	Bit Test f, Skip if Clear	1	1 (2 or 3)	None
		BTSC Ws,#bit4	Bit Test Ws, Skip if Clear	1	1 (2 or 3)	None
11	BTSS	BTSS f,#bit4	Bit Test f, Skip if Set	1	1 (2 or 3)	None
		BTSS Ws,#bit4	Bit Test Ws, Skip if Set	1	1 (2 or 3)	None
12	BTST	BTST f,#bit4	Bit Test f	1	1	Z
		BTST.C Ws,#bit4	Bit Test Ws to C	1	1	C
		BTST.Z Ws,#bit4	Bit Test Ws to Z	1	1	Z
		BTST.C Ws,Wb	Bit Test Ws<Wb> to C	1	1	C
		BTST.Z Ws,Wb	Bit Test Ws<Wb> to Z	1	1	Z
13	BTSTS	BTSTS f,#bit4	Bit Test then Set f	1	1	Z
		BTSTS.C Ws,#bit4	Bit Test Ws to C, then Set	1	1	C
		BTSTS.Z Ws,#bit4	Bit Test Ws to Z, then Set	1	1	Z
14	CALL	CALL lit23	Call Subroutine	2	2	None
		CALL Wn	Call Indirect Subroutine	1	2	None
15	CLR	CLR f	f = 0x0000	1	1	None
		CLR WREG	WREG = 0x0000	1	1	None
		CLR Ws	Ws = 0x0000	1	1	None
		CLR Acc,Wx,Wxd,Wy,Wyd,AWB	Clear Accumulator	1	1	OA,OB,SA,SB
16	CLRWDT	CLRWDT	Clear Watchdog Timer	1	1	WDTO,Sleep
17	COM	COM f	$f = \overline{f}$	1	1	N,Z
		COM f,WREG	$WREG = \overline{f}$	1	1	N,Z
		COM Ws,Wd	$Wd = \overline{Ws}$	1	1	N,Z
18	CP	CP f	Compare f with WREG	1	1	C,DC,N,OV,Z
		CP Wb,#lit5	Compare Wb with lit5	1	1	C,DC,N,OV,Z
		CP Wb,Ws	Compare Wb with Ws (Wb – Ws)	1	1	C,DC,N,OV,Z
19	CP0	CP0 f	Compare f with 0x0000	1	1	C,DC,N,OV,Z
		CP0 Ws	Compare Ws with 0x0000	1	1	C,DC,N,OV,Z
20	CPB	CPB f	Compare f with WREG, with Borrow	1	1	C,DC,N,OV,Z
		CPB Wb,#lit5	Compare Wb with lit5, with Borrow	1	1	C,DC,N,OV,Z
		CPB Wb,Ws	Compare Wb with Ws, with Borrow ($Wb – Ws – \overline{C}$)	1	1	C,DC,N,OV,Z
21	CPSEQ	CPSEQ Wb, Wn	Compare Wb with Wn, Skip if =	1	1 (2 or 3)	None
22	CPSGT	CPSGT Wb, Wn	Compare Wb with Wn, Skip if >	1	1 (2 or 3)	None
23	CPSLT	CPSLT Wb, Wn	Compare Wb with Wn, Skip if <	1	1 (2 or 3)	None
24	CPSNE	CPSNE Wb, Wn	Compare Wb with Wn, Skip if ≠	1	1 (2 or 3)	None
25	DAW	DAW Wn	Wn = Decimal Adjust Wn	1	1	C
26	DEC	DEC f	f = f – 1	1	1	C,DC,N,OV,Z
		DEC f,WREG	WREG = f – 1	1	1	C,DC,N,OV,Z
		DEC Ws,Wd	Wd = Ws – 1	1	1	C,DC,N,OV,Z
27	DEC2	DEC2 f	f = f – 2	1	1	C,DC,N,OV,Z
		DEC2 f,WREG	WREG = f – 2	1	1	C,DC,N,OV,Z
		DEC2 Ws,Wd	Wd = Ws – 2	1	1	C,DC,N,OV,Z
28	DISI	DISI #lit14	Disable Interrupts for k Instruction Cycles	1	1	None

TABLE 23-2: INSTRUCTION SET OVERVIEW (CONTINUED)

Base Instr #	Assembly Mnemonic	Assembly Syntax	Description	# of Words	# of Cycles	Status Flags Affected
29	DIV	DIV.S Wm,Wn	Signed 16/16-bit Integer Divide	1	18	N,Z,C,OV
		DIV.SD Wm,Wn	Signed 32/16-bit Integer Divide	1	18	N,Z,C,OV
		DIV.U Wm,Wn	Unsigned 16/16-bit Integer Divide	1	18	N,Z,C,OV
		DIV.UD Wm,Wn	Unsigned 32/16-bit Integer Divide	1	18	N,Z,C,OV
30	DIVF	DIVF Wm,Wn	Signed 16/16-bit Fractional Divide	1	18	N,Z,C,OV
31	DO	DO #lit14,Expr	Do code to PC + Expr, lit14 + 1 times	2	2	None
		DO Wn,Expr	Do code to PC + Expr, (Wn) + 1 times	2	2	None
32	ED	ED Wm*Wm,Acc,Wx,Wy,Wxd	Euclidean Distance (no accumulate)	1	1	OA,OB,OAB, SA,SB,SAB
33	EDAC	EDAC Wm*Wm,Acc,Wx,Wy,Wxd	Euclidean Distance	1	1	OA,OB,OAB, SA,SB,SAB
34	EXCH	EXCH Wns,Wnd	Swap Wns with Wnd	1	1	None
35	FBCL	FBCL Ws,Wnd	Find Bit Change from Left (MSb) Side	1	1	C
36	FF1L	FF1L Ws,Wnd	Find First One from Left (MSb) Side	1	1	C
37	FF1R	FF1R Ws,Wnd	Find First One from Right (LSb) Side	1	1	C
38	GOTO	GOTO Expr	Go to Address	2	2	None
		GOTO Wn	Go to Indirect	1	2	None
39	INC	INC f	f = f + 1	1	1	C,DC,N,OV,Z
		INC f,WREG	WREG = f + 1	1	1	C,DC,N,OV,Z
		INC Ws,Wd	Wd = Ws + 1	1	1	C,DC,N,OV,Z
40	INC2	INC2 f	f = f + 2	1	1	C,DC,N,OV,Z
		INC2 f,WREG	WREG = f + 2	1	1	C,DC,N,OV,Z
		INC2 Ws,Wd	Wd = Ws + 2	1	1	C,DC,N,OV,Z
41	IOR	IOR f	f = f .IOR. WREG	1	1	N,Z
		IOR f,WREG	WREG = f .IOR. WREG	1	1	N,Z
		IOR #lit10,Wn	Wd = lit10 .IOR. Wd	1	1	N,Z
		IOR Wb,Ws,Wd	Wd = Wb .IOR. Ws	1	1	N,Z
		IOR Wb,#lit5,Wd	Wd = Wb .IOR. lit5	1	1	N,Z
42	LAC	LAC Wso,#Slit4,Acc	Load Accumulator	1	1	OA,OB,OAB, SA,SB,SAB
43	LNK	LNK #lit14	Link Frame Pointer	1	1	None
44	LSR	LSR f	f = Logical Right Shift f	1	1	C,N,OV,Z
		LSR f,WREG	WREG = Logical Right Shift f	1	1	C,N,OV,Z
		LSR Ws,Wd	Wd = Logical Right Shift Ws	1	1	C,N,OV,Z
		LSR Wb,Wns,Wnd	Wnd = Logical Right Shift Wb by Wns	1	1	N,Z
		LSR Wb,#lit5,Wnd	Wnd = Logical Right Shift Wb by lit5	1	1	N,Z
45	MAC	MAC Wm*Wn,Acc,Wx,Wxd,Wy,Wyd , AWB	Multiply and Accumulate	1	1	OA,OB,OAB, SA,SB,SAB
		MAC Wm*Wm,Acc,Wx,Wxd,Wy,Wyd	Square and Accumulate	1	1	OA,OB,OAB, SA,SB,SAB
46	MOV	MOV f,Wn	Move f to Wn	1	1	None
		MOV f	Move f to f	1	1	N,Z
		MOV f,WREG	Move f to WREG	1	1	None
		MOV #lit16,Wn	Move 16-bit Literal to Wn	1	1	None
		MOV.b #lit8,Wn	Move 8-bit Literal to Wn	1	1	None
		MOV Wn,f	Move Wn to f	1	1	None
		MOV Wso,Wdo	Move Ws to Wd	1	1	None
		MOV WREG,f	Move WREG to f	1	1	None
		MOV.D Wns,Wd	Move Double from W(ns):W(ns + 1) to Wd	1	2	None
		MOV.D Ws,Wnd	Move Double from Ws to W(nd + 1):W(nd)	1	2	None
47	MOVSAC	MOVSAC Acc,Wx,Wxd,Wy,Wyd,AWB	Prefetch and Store Accumulator	1	1	None

© 2011-2012 Microchip Technology Inc.

TABLE 23-2: INSTRUCTION SET OVERVIEW (CONTINUED)

Base Instr #	Assembly Mnemonic	Assembly Syntax	Description	# of Words	# of Cycles	Status Flags Affected
48	MPY	MPY Wm*Wn,Acc,Wx,Wxd,Wy,Wyd	Multiply Wm by Wn to Accumulator	1	1	OA,OB,OAB, SA,SB,SAB
		MPY Wm*Wm,Acc,Wx,Wxd,Wy,Wyd	Square Wm to Accumulator	1	1	OA,OB,OAB, SA,SB,SAB
49	MPY.N	MPY.N Wm*Wn,Acc,Wx,Wxd,Wy,Wyd	-(Multiply Wm by Wn) to Accumulator	1	1	None
50	MSC	MSC Wm*Wm,Acc,Wx,Wxd,Wy,Wyd, AWB	Multiply and Subtract from Accumulator	1	1	OA,OB,OAB, SA,SB,SAB
51	MUL	MUL.SS Wb,Ws,Wnd	{Wnd + 1, Wnd} = signed(Wb) * signed(Ws)	1	1	None
		MUL.SU Wb,Ws,Wnd	{Wnd + 1, Wnd} = signed(Wb) * unsigned(Ws)	1	1	None
		MUL.US Wb,Ws,Wnd	{Wnd + 1, Wnd} = unsigned(Wb) * signed(Ws)	1	1	None
		MUL.UU Wb,Ws,Wnd	{Wnd + 1, Wnd} = unsigned(Wb) * unsigned(Ws)	1	1	None
		MUL.SU Wb,#lit5,Wnd	{Wnd + 1, Wnd} = signed(Wb) * unsigned(lit5)	1	1	None
		MUL.UU Wb,#lit5,Wnd	{Wnd + 1, Wnd} = unsigned(Wb) * unsigned(lit5)	1	1	None
		MUL f	W3:W2 = f * WREG	1	1	None
52	NEG	NEG Acc	Negate Accumulator	1	1	OA,OB,OAB, SA,SB,SAB
		NEG f	f = $\overline{f}$ + 1	1	1	C,DC,N,OV,Z
		NEG f,WREG	WREG = $\overline{f}$ + 1	1	1	C,DC,N,OV,Z
		NEG Ws,Wd	Wd = $\overline{Ws}$ + 1	1	1	C,DC,N,OV,Z
53	NOP	NOP	No Operation	1	1	None
		NOPR	No Operation	1	1	None
54	POP	POP f	Pop f from Top-of-Stack (TOS)	1	1	None
		POP Wdo	Pop from Top-of-Stack (TOS) to Wdo	1	1	None
		POP.D Wnd	Pop from Top-of-Stack (TOS) to W(nd):W(nd + 1)	1	2	None
		POP.S	Pop Shadow Registers	1	1	All
55	PUSH	PUSH f	Push f to Top-of-Stack (TOS)	1	1	None
		PUSH Wso	Push Wso to Top-of-Stack (TOS)	1	1	None
		PUSH.D Wns	Push W(ns):W(ns + 1) to Top-of-Stack (TOS)	1	2	None
		PUSH.S	Push Shadow Registers	1	1	None
56	PWRSAV	PWRSAV #lit1	Go into Sleep or Idle mode	1	1	WDTO,Sleep
57	RCALL	RCALL Expr	Relative Call	1	2	None
		RCALL Wn	Computed Call	1	2	None
58	REPEAT	REPEAT #lit14	Repeat Next Instruction lit14 + 1 times	1	1	None
		REPEAT Wn	Repeat Next Instruction (Wn) + 1 times	1	1	None
59	RESET	RESET	Software Device Reset	1	1	None
60	RETFIE	RETFIE	Return from interrupt	1	3 (2)	None
61	RETLW	RETLW #lit10,Wn	Return with Literal in Wn	1	3 (2)	None
62	RETURN	RETURN	Return from Subroutine	1	3 (2)	None
63	RLC	RLC f	f = Rotate Left through Carry f	1	1	C,N,Z
		RLC f,WREG	WREG = Rotate Left through Carry f	1	1	C,N,Z
		RLC Ws,Wd	Wd = Rotate Left through Carry Ws	1	1	C,N,Z
64	RLNC	RLNC f	f = Rotate Left (No Carry) f	1	1	N,Z
		RLNC f,WREG	WREG = Rotate Left (No Carry) f	1	1	N,Z
		RLNC Ws,Wd	Wd = Rotate Left (No Carry) Ws	1	1	N,Z
65	RRC	RRC f	f = Rotate Right through Carry f	1	1	C,N,Z
		RRC f,WREG	WREG = Rotate Right through Carry f	1	1	C,N,Z
		RRC Ws,Wd	Wd = Rotate Right through Carry Ws	1	1	C,N,Z

TABLE 23-2: INSTRUCTION SET OVERVIEW (CONTINUED)

Base Instr #	Assembly Mnemonic	Assembly Syntax		Description	# of Words	# of Cycles	Status Flags Affected
66	RRNC	RRNC	f	f = Rotate Right (No Carry) f	1	1	N,Z
		RRNC	f,WREG	WREG = Rotate Right (No Carry) f	1	1	N,Z
		RRNC	Ws,Wd	Wd = Rotate Right (No Carry) Ws	1	1	N,Z
67	SAC	SAC	Acc,#Slit4,Wdo	Store Accumulator	1	1	None
		SAC.R	Acc,#Slit4,Wdo	Store Rounded Accumulator	1	1	None
68	SE	SE	Ws,Wnd	Wnd = Sign-Extended Ws	1	1	C,N,Z
69	SETM	SETM	f	f = 0xFFFF	1	1	None
		SETM	WREG	WREG = 0xFFFF	1	1	None
		SETM	Ws	Ws = 0xFFFF	1	1	None
70	SFTAC	SFTAC	Acc,Wn	Arithmetic Shift Accumulator by (Wn)	1	1	OA,OB,OAB, SA,SB,SAB
		SFTAC	Acc,#Slit6	Arithmetic Shift Accumulator by Slit6	1	1	OA,OB,OAB, SA,SB,SAB
71	SL	SL	f	f = Left Shift f	1	1	C,N,OV,Z
		SL	f,WREG	WREG = Left Shift f	1	1	C,N,OV,Z
		SL	Ws,Wd	Wd = Left Shift Ws	1	1	C,N,OV,Z
		SL	Wb,Wns,Wnd	Wnd = Left Shift Wb by Wns	1	1	N,Z
		SL	Wb,#lit5,Wnd	Wnd = Left Shift Wb by lit5	1	1	N,Z
72	SUB	SUB	Acc	Subtract Accumulators	1	1	OA,OB,OAB, SA,SB,SAB
		SUB	f	f = f – WREG	1	1	C,DC,N,OV,Z
		SUB	f,WREG	WREG = f – WREG	1	1	C,DC,N,OV,Z
		SUB	#lit10,Wn	Wn = Wn – lit10	1	1	C,DC,N,OV,Z
		SUB	Wb,Ws,Wd	Wd = Wb – Ws	1	1	C,DC,N,OV,Z
		SUB	Wb,#lit5,Wd	Wd = Wb – lit5	1	1	C,DC,N,OV,Z
73	SUBB	SUBB	f	f = f – WREG – ($\overline{C}$)	1	1	C,DC,N,OV,Z
		SUBB	f,WREG	WREG = f – WREG – ($\overline{C}$)	1	1	C,DC,N,OV,Z
		SUBB	#lit10,Wn	Wn = Wn – lit10 – ($\overline{C}$)	1	1	C,DC,N,OV,Z
		SUBB	Wb,Ws,Wd	Wd = Wb – Ws – ($\overline{C}$)	1	1	C,DC,N,OV,Z
		SUBB	Wb,#lit5,Wd	Wd = Wb – lit5 – ($\overline{C}$)	1	1	C,DC,N,OV,Z
74	SUBR	SUBR	f	f = WREG – f	1	1	C,DC,N,OV,Z
		SUBR	f,WREG	WREG = WREG – f	1	1	C,DC,N,OV,Z
		SUBR	Wb,Ws,Wd	Wd = Ws – Wb	1	1	C,DC,N,OV,Z
		SUBR	Wb,#lit5,Wd	Wd = lit5 – Wb	1	1	C,DC,N,OV,Z
75	SUBBR	SUBBR	f	f = WREG – f – ($\overline{C}$)	1	1	C,DC,N,OV,Z
		SUBBR	f,WREG	WREG = WREG – f – ($\overline{C}$)	1	1	C,DC,N,OV,Z
		SUBBR	Wb,Ws,Wd	Wd = Ws – Wb – ($\overline{C}$)	1	1	C,DC,N,OV,Z
		SUBBR	Wb,#lit5,Wd	Wd = lit5 – Wb – ($\overline{C}$)	1	1	C,DC,N,OV,Z
76	SWAP	SWAP.b	Wn	Wn = Nibble Swap Wn	1	1	None
		SWAP	Wn	Wn = Byte Swap Wn	1	1	None
77	TBLRDH	TBLRDH	Ws,Wd	Read Prog<23:16> to Wd<7:0>	1	2	None
78	TBLRDL	TBLRDL	Ws,Wd	Read Prog<15:0> to Wd	1	2	None
79	TBLWTH	TBLWTH	Ws,Wd	Write Ws<7:0> to Prog<23:16>	1	2	None
80	TBLWTL	TBLWTL	Ws,Wd	Write Ws to Prog<15:0>	1	2	None
81	ULNK	ULNK		Unlink Frame Pointer	1	1	None
82	XOR	XOR	f	f = f .XOR. WREG	1	1	N,Z
		XOR	f,WREG	WREG = f .XOR. WREG	1	1	N,Z
		XOR	#lit10,Wn	Wd = lit10 .XOR. Wd	1	1	N,Z
		XOR	Wb,Ws,Wd	Wd = Wb .XOR. Ws	1	1	N,Z
		XOR	Wb,#lit5,Wd	Wd = Wb .XOR. lit5	1	1	N,Z
83	ZE	ZE	Ws,Wnd	Wnd = Zero-Extend Ws	1	1	C,Z,N

© 2011-2012 Microchip Technology Inc.

24.0 DEVELOPMENT SUPPORT

The PIC® microcontrollers and dsPIC® digital signal controllers are supported with a full range of software and hardware development tools:

- Integrated Development Environment
  - MPLAB® IDE Software
- Compilers/Assemblers/Linkers
  - MPLAB C Compiler for Various Device Families
  - HI-TECH C® for Various Device Families
  - MPASM™ Assembler
  - MPLINK™ Object Linker/ MPLIB™ Object Librarian
  - MPLAB Assembler/Linker/Librarian for Various Device Families
- Simulators
  - MPLAB SIM Software Simulator
- Emulators
  - MPLAB REAL ICE™ In-Circuit Emulator
- In-Circuit Debuggers
  - MPLAB ICD 3
  - PICkit™ 3 Debug Express
- Device Programmers
  - PICkit™ 2 Programmer
  - MPLAB PM3 Device Programmer
- Low-Cost Demonstration/Development Boards, Evaluation Kits, and Starter Kits

24.1 MPLAB Integrated Development Environment Software

The MPLAB IDE software brings an ease of software development previously unseen in the 8/16/32-bit microcontroller market. The MPLAB IDE is a Windows® operating system-based application that contains:

- A single graphical interface to all debugging tools
  - Simulator
  - Programmer (sold separately)
  - In-Circuit Emulator (sold separately)
  - In-Circuit Debugger (sold separately)
- A full-featured editor with color-coded context
- A multiple project manager
- Customizable data windows with direct edit of contents
- High-level source code debugging
- Mouse over variable inspection
- Drag and drop variables from source to watch windows
- Extensive on-line help
- Integration of select third party tools, such as IAR C Compilers

The MPLAB IDE allows you to:

- Edit your source files (either C or assembly)
- One-touch compile or assemble, and download to emulator and simulator tools (automatically updates all project information)
- Debug using:
  - Source files (C or assembly)
  - Mixed C and assembly
  - Machine code

MPLAB IDE supports multiple debugging tools in a single development paradigm, from the cost-effective simulators, through low-cost in-circuit debuggers, to full-featured emulators. This eliminates the learning curve when upgrading to tools with increased flexibility and power.

24.2 MPLAB C Compilers for Various Device Families

The MPLAB C Compiler code development systems are complete ANSI C compilers for Microchip's PIC18, PIC24 and PIC32 families of microcontrollers and the dsPIC30 and dsPIC33 families of digital signal controllers. These compilers provide powerful integration capabilities, superior code optimization and ease of use.

For easy source level debugging, the compilers provide symbol information that is optimized to the MPLAB IDE debugger.

24.3 HI-TECH C for Various Device Families

The HI-TECH C Compiler code development systems are complete ANSI C compilers for Microchip's PIC family of microcontrollers and the dsPIC family of digital signal controllers. These compilers provide powerful integration capabilities, omniscient code generation and ease of use.

For easy source level debugging, the compilers provide symbol information that is optimized to the MPLAB IDE debugger.

The compilers include a macro assembler, linker, preprocessor, and one-step driver, and can run on multiple platforms.

24.4 MPASM Assembler

The MPASM Assembler is a full-featured, universal macro assembler for PIC10/12/16/18 MCUs.

The MPASM Assembler generates relocatable object files for the MPLINK Object Linker, Intel® standard HEX files, MAP files to detail memory usage and symbol reference, absolute LST files that contain source lines and generated machine code and COFF files for debugging.

The MPASM Assembler features include:

- Integration into MPLAB IDE projects
- User-defined macros to streamline assembly code
- Conditional assembly for multipurpose source files
- Directives that allow complete control over the assembly process

24.5 MPLINK Object Linker/ MPLIB Object Librarian

The MPLINK Object Linker combines relocatable objects created by the MPASM Assembler and the MPLAB C18 C Compiler. It can link relocatable objects from precompiled libraries, using directives from a linker script.

The MPLIB Object Librarian manages the creation and modification of library files of precompiled code. When a routine from a library is called from a source file, only the modules that contain that routine will be linked in with the application. This allows large libraries to be used efficiently in many different applications.

The object linker/library features include:

- Efficient linking of single libraries instead of many smaller files
- Enhanced code maintainability by grouping related modules together
- Flexible creation of libraries with easy module listing, replacement, deletion and extraction

24.6 MPLAB Assembler, Linker and Librarian for Various Device Families

MPLAB Assembler produces relocatable machine code from symbolic assembly language for PIC24, PIC32 and dsPIC devices. MPLAB C Compiler uses the assembler to produce its object file. The assembler generates relocatable object files that can then be archived or linked with other relocatable object files and archives to create an executable file. Notable features of the assembler include:

- Support for the entire device instruction set
- Support for fixed-point and floating-point data
- Command line interface
- Rich directive set
- Flexible macro language
- MPLAB IDE compatibility

© 2011-2012 Microchip Technology Inc.

24.7 MPLAB SIM Software Simulator

The MPLAB SIM Software Simulator allows code development in a PC-hosted environment by simulating the PIC MCUs and dsPIC® DSCs on an instruction level. On any given instruction, the data areas can be examined or modified and stimuli can be applied from a comprehensive stimulus controller. Registers can be logged to files for further run-time analysis. The trace buffer and logic analyzer display extend the power of the simulator to record and track program execution, actions on I/O, most peripherals and internal registers.

The MPLAB SIM Software Simulator fully supports symbolic debugging using the MPLAB C Compilers, and the MPASM and MPLAB Assemblers. The software simulator offers the flexibility to develop and debug code outside of the hardware laboratory environment, making it an excellent, economical software development tool.

24.8 MPLAB REAL ICE In-Circuit Emulator System

MPLAB REAL ICE In-Circuit Emulator System is Microchip's next generation high-speed emulator for Microchip Flash DSC and MCU devices. It debugs and programs PIC® Flash MCUs and dsPIC® Flash DSCs with the easy-to-use, powerful graphical user interface of the MPLAB Integrated Development Environment (IDE), included with each kit.

The emulator is connected to the design engineer's PC using a high-speed USB 2.0 interface and is connected to the target with either a connector compatible with in-circuit debugger systems (RJ11) or with the new high-speed, noise tolerant, Low-Voltage Differential Signal (LVDS) interconnection (CAT5).

The emulator is field upgradable through future firmware downloads in MPLAB IDE. In upcoming releases of MPLAB IDE, new devices will be supported, and new features will be added. MPLAB REAL ICE offers significant advantages over competitive emulators including low-cost, full-speed emulation, run-time variable watches, trace analysis, complex breakpoints, a ruggedized probe interface and long (up to three meters) interconnection cables.

24.9 MPLAB ICD 3 In-Circuit Debugger System

MPLAB ICD 3 In-Circuit Debugger System is Microchip's most cost effective high-speed hardware debugger/programmer for Microchip Flash Digital Signal Controller (DSC) and microcontroller (MCU) devices. It debugs and programs PIC® Flash microcontrollers and dsPIC® DSCs with the powerful, yet easy-to-use graphical user interface of MPLAB Integrated Development Environment (IDE).

The MPLAB ICD 3 In-Circuit Debugger probe is connected to the design engineer's PC using a high-speed USB 2.0 interface and is connected to the target with a connector compatible with the MPLAB ICD 2 or MPLAB REAL ICE systems (RJ-11). MPLAB ICD 3 supports all MPLAB ICD 2 headers.

24.10 PICkit 3 In-Circuit Debugger/ Programmer and PICkit 3 Debug Express

The MPLAB PICkit 3 allows debugging and programming of PIC® and dsPIC® Flash microcontrollers at a most affordable price point using the powerful graphical user interface of the MPLAB Integrated Development Environment (IDE). The MPLAB PICkit 3 is connected to the design engineer's PC using a full speed USB interface and can be connected to the target via an Microchip debug (RJ-11) connector (compatible with MPLAB ICD 3 and MPLAB REAL ICE). The connector uses two device I/O pins and the reset line to implement in-circuit debugging and In-Circuit Serial Programming™.

The PICkit 3 Debug Express include the PICkit 3, demo board and microcontroller, hookup cables and CDROM with user's guide, lessons, tutorial, compiler and MPLAB IDE software.

24.11 PICkit 2 Development Programmer/Debugger and PICkit 2 Debug Express

The PICkit™ 2 Development Programmer/Debugger is a low-cost development tool with an easy to use interface for programming and debugging Microchip's Flash families of microcontrollers. The full featured Windows® programming interface supports baseline (PIC10F, PIC12F5xx, PIC16F5xx), midrange (PIC12F6xx, PIC16F), PIC18F, PIC24, dsPIC30, dsPIC33, and PIC32 families of 8-bit, 16-bit, and 32-bit microcontrollers, and many Microchip Serial EEPROM products. With Microchip's powerful MPLAB Integrated Development Environment (IDE) the PICkit™ 2 enables in-circuit debugging on most PIC® microcontrollers. In-Circuit-Debugging runs, halts and single steps the program while the PIC microcontroller is embedded in the application. When halted at a breakpoint, the file registers can be examined and modified.

The PICkit 2 Debug Express include the PICkit 2, demo board and microcontroller, hookup cables and CDROM with user's guide, lessons, tutorial, compiler and MPLAB IDE software.

24.12 MPLAB PM3 Device Programmer

The MPLAB PM3 Device Programmer is a universal, CE compliant device programmer with programmable voltage verification at V_{DDMIN} and V_{DDMAX} for maximum reliability. It features a large LCD display (128 x 64) for menus and error messages and a modular, detachable socket assembly to support various package types. The ICSP™ cable assembly is included as a standard item. In Stand-Alone mode, the MPLAB PM3 Device Programmer can read, verify and program PIC devices without a PC connection. It can also set code protection in this mode. The MPLAB PM3 connects to the host PC via an RS-232 or USB cable. The MPLAB PM3 has high-speed communications and optimized algorithms for quick programming of large memory devices and incorporates an MMC card for file storage and data applications.

24.13 Demonstration/Development Boards, Evaluation Kits, and Starter Kits

A wide variety of demonstration, development and evaluation boards for various PIC MCUs and dsPIC DSCs allows quick application development on fully functional systems. Most boards include prototyping areas for adding custom circuitry and provide application firmware and source code for examination and modification.

The boards support a variety of features, including LEDs, temperature sensors, switches, speakers, RS-232 interfaces, LCD displays, potentiometers and additional EEPROM memory.

The demonstration and development boards can be used in teaching environments, for prototyping custom circuits and for learning about various microcontroller applications.

In addition to the PICDEM™ and dsPICDEM™ demonstration/development board series of circuits, Microchip has a line of evaluation kits and demonstration software for analog filter design, KEELOQ® security ICs, CAN, IrDA®, PowerSmart battery management, SEEVAL® evaluation system, Sigma-Delta ADC, flow rate sensing, plus many more.

Also available are starter kits that contain everything needed to experience the specified device. This usually includes a single application and debug capability, all on one board.

Check the Microchip web page (www.microchip.com) for the complete list of demonstration, development and evaluation kits.

© 2011-2012 Microchip Technology Inc.

25.0 ELECTRICAL CHARACTERISTICS

This section provides an overview of dsPIC33FJ06GS001/101A/102A/202A and dsPIC33FJ09GS302 electrical characteristics. Additional information will be provided in future revisions of this document as it becomes available.

Absolute maximum ratings are listed below. Exposure to these maximum rating conditions for extended periods may affect device reliability. Functional operation of the device at these or any other conditions above the parameters indicated in the operation listings of this specification is not implied.

Absolute Maximum Ratings(1)

Ambient temperature under bias ..... -40°C to +125°C
Storage temperature ..... -65°C to +150°C
Voltage on V_{DD} with respect to V_{SS} ..... -0.3V to +4.0V
Voltage on any pin that is not 5V tolerant, with respect to V_{SS}(3) ..... -0.3V to (V_{DD} + 0.3V)
Voltage on any 5V tolerant pin with respect to V_{SS}, when $V_{DD} \geq 3.0V$(3) ..... -0.3V to +5.6V
Voltage on any 5V tolerant pin with respect to Vss, when $V_{DD} < 3.0V$(3) ..... -0.3V to (V_{DD} + 0.3V)
Maximum current out of V_{SS} pin ..... 300 mA
Maximum current into V_{DD} pin(2) ..... 250 mA
Maximum current sourced/sunk by any 4x I/O pin ..... 15 mA
Maximum current sourced/sunk by any 16x I/O pin ..... 45 mA
Maximum current sunk by all ports ..... 200 mA
Maximum current sourced by all ports(2) 200mA

Note 1: Stresses above those listed under “Absolute Maximum Ratings” may cause permanent damage to the device. This is a stress rating only, and functional operation of the device at those or any other conditions above those indicated in the operation listings of this specification is not implied. Exposure to maximum rating conditions for extended periods may affect device reliability.

2: Maximum allowable current is a function of device maximum power dissipation (see Table 25-2).

3: See the **“Pin Diagrams”** section for 5V tolerant pins.

25.1 DC Characteristics

TABLE 25-1: OPERATING MIPS vs. VOLTAGE

Characteristic	V_{DD} Range (in Volts)	Temp Range (in °C)	Maximum MIPS
			dsPIC33FJ06GS001/101A/102A/202A and dsPIC33FJ09GS302
—	V_{BOR}-3.6V(1)	-40°C to +85°C	40
—	V_{BOR}-3.6V(1)	-40°C to +125°C	40

Note 1: Overall functional device operation at $V_{BORMIN} < V_{DD} < V_{DDMIN}$ is tested but not characterized. All device analog modules, such as the ADC, etc., will function but with degraded performance below V_{DDMIN}. Refer to Parameter BO10 in Table 25-11 for BOR values.

TABLE 25-2: THERMAL OPERATING CONDITIONS

Rating	Symbol	Min.	Typ.	Max.	Unit
Industrial Temperature Devices					
Operating Junction Temperature Range	T_J	-40	—	+125	°C
Operating Ambient Temperature Range	T_A	-40	—	+85	°C
Extended Temperature Devices					
Operating Junction Temperature Range	T_J	-40	—	+140	°C
Operating Ambient Temperature Range	T_A	-40	—	+125	°C
Power Dissipation Internal Chip Power Dissipation: $P_{INT} = V_{DD} \times (I_{DD} - \Sigma I_{OH})$ I/O Pin Power Dissipation: $I/O = \Sigma (\{V_{DD} - V_{OH}\} \times I_{OH}) + \Sigma (V_{OL} \times I_{OL})$	P_D	$P_{INT} + P_{I/O}$			W
Maximum Allowed Power Dissipation	P_{DMAX}	$(T_J - T_A)/\theta_{JA}$			W

TABLE 25-3: THERMAL PACKAGING CHARACTERISTICS

Characteristic	Symbol	Typ.	Max.	Unit	Notes
Package Thermal Resistance, 18-Pin SOIC	θ_{JA}	57	—	°C/W	1
Package Thermal Resistance, 18-pin PDIP	θ_{JA}	66	—	°C/W	1
Package Thermal Resistance, 20-pin SSOP	θ_{JA}	64	—	°C/W	1
Package Thermal Resistance, 28-Pin QFN-S	θ_{JA}	34	—	°C/W	1
Package Thermal Resistance, 28-pin SSOP	θ_{JA}	71	—	°C/W	1
Package Thermal Resistance, 28-Pin SOIC	θ_{JA}	47	—	°C/W	1
Package Thermal Resistance, 28-Pin SPDIP	θ_{JA}	45	—	°C/W	1
Package Thermal Resistance, 36-Pin VTLA	θ_{JA}	29	—	°C/W	1

Note 1: Junction to ambient thermal resistance, Theta-JA (θ_{JA}) numbers are achieved by package simulations.

© 2011-2012 Microchip Technology Inc.

TABLE 25-4: DC TEMPERATURE AND VOLTAGE SPECIFICATIONS

DC CHARACTERISTICS			Standard Operating Conditions: 3.0V to 3.6V (unless otherwise stated) Operating temperature -40°C ≤ TA ≤ +85°C for Industrial -40°C ≤ TA ≤ +125°C for Extended				
Param.	**Symbol**	**Characteristic**	**Min.**	**Typ.(1)**	**Max.**	**Units**	**Conditions**
Operating Voltage							
DC10	VDD	**Supply Voltage(4)**	VBOR	—	3.6	V	Industrial and Extended
DC12	VDR	**RAM Data Retention Voltage(2)**	1.8	—	—	V	
DC16	VPOR	**VDD Start Voltage** to Ensure Internal Power-on Reset Signal	—	—	VSS	V	
DC17	SVDD	**VDD Rise Rate(3)** to Ensure Internal Power-on Reset Signal	0.03	—	—	V/ms	0-3.0V in 0.1s

Note 1: Data in “Typ” column is at 3.3V, +25°C unless otherwise stated.

2: This is the limit to which VDD may be lowered without losing RAM data.

3: These parameters are characterized but not tested in manufacturing.

4: Overall functional device operation at VBORMIN < VDD < VDDMIN is tested but not characterized. All device analog modules, such as the ADC, etc., will function but with degraded performance below VDDMIN. Refer to Parameter BO10 in Table 25-11 for BOR values.

TABLE 25-5: DC CHARACTERISTICS: OPERATING CURRENT (IDD)

DC CHARACTERISTICS			Standard Operating Conditions: 3.0V to 3.6V (unless otherwise stated) Operating temperature -40°C ≤ TA ≤ +85°C for Industrial -40°C ≤ TA ≤ +125°C for Extended			
Param.	**Typical(1)**	**Max.**	**Units**	**Conditions**		
Operating Current (IDD)(2)						
DC20d	15	23	mA	-40°C	3.3V	10 MIPS
DC20a	15	23	mA	+25°C		
DC20b	15	23	mA	+85°C		
DC20c	15	23	mA	+125°C		
DC21d	23	34	mA	-40°C	3.3V	16 MIPS(3)
DC21a	23	34	mA	+25°C		
DC21b	23	34	mA	+85°C		
DC21c	23	34	mA	+125°C		
DC22d	25	38	mA	-40°C	3.3V	20 MIPS(3)
DC22a	25	38	mA	+25°C		
DC22b	25	38	mA	+85°C		
DC22c	25	38	mA	+125°C		
DC23d	34	51	mA	-40°C	3.3V	30 MIPS(3)
DC23a	34	51	mA	+25°C		
DC23b	34	51	mA	+85°C		
DC23c	34	51	mA	+125°C		
DC24d	43	64	mA	-40°C	3.3V	40 MIPS(3)
DC24a	43	64	mA	+25°C		
DC24b	43	64	mA	+85°C		
DC24c	43	64	mA	+125°C		
DC25d	83	125	mA	-40°C	3.3V	40 MIPS See **Note 2**, except PWM and ADC are operating at maximum speed (PTCON2 = `0x0000`)
DC25a	83	125	mA	+25°C		
DC25b	83	125	mA	+85°C		
DC25c	83	125	mA	+125°C		

Note 1: Data in "Typical" column is at 3.3V, +25°C unless otherwise stated.

2: IDD is primarily a function of the operating voltage and frequency. Other factors, such as I/O pin loading and switching rate, oscillator type, internal code execution pattern and temperature, also have an impact on the current consumption. The test conditions for all IDD measurements are as follows:

- Oscillator is configured in EC mode, OSC1 is driven with external square wave from rail-to-rail
- CLKO is configured as an I/O input pin in the Configuration Word
- All I/O pins are configured as inputs and pulled to VSS
- $\overline{\text{MCLR}}$ = VDD; WDT and FSCM are disabled
- CPU, SRAM, program memory and data memory are operational
- No peripheral modules are operating; however, every peripheral is being clocked (PMDx bits are all zeroed)
- CPU is executing `while(1)` statement

3: These parameters are characterized but not tested in manufacturing.

© 2011-2012 Microchip Technology Inc.

TABLE 25-6: DC CHARACTERISTICS: IDLE CURRENT (IIDLE)

DC CHARACTERISTICS			Standard Operating Conditions: 3.0V to 3.6V (unless otherwise stated) Operating temperature -40°C ≤ TA ≤ +85°C for Industrial -40°C ≤ TA ≤ +125°C for Extended			
Param.	**Typical(1)**	**Max.**	**Units**	**Conditions**		
Idle Current (IIDLE): Core Off Clock On Base Current(2)						
DC40d	13	21	mA	-40°C	3.3V	10 MIPS
DC40a	13	21	mA	+25°C		
DC40b	13	21	mA	+85°C		
DC40c	13	21	mA	+125°C		
DC41d	16	24	mA	-40°C	3.3V	16 MIPS(3)
DC41a	16	24	mA	+25°C		
DC41b	16	24	mA	+85°C		
DC41c	16	24	mA	+125°C		
DC42d	17	27	mA	-40°C	3.3V	20 MIPS(3)
DC42a	17	27	mA	+25°C		
DC42b	17	27	mA	+85°C		
DC42c	17	27	mA	+125°C		
DC43d	20	32	mA	-40°C	3.3V	30 MIPS(3)
DC43a	20	32	mA	+25°C		
DC43b	20	32	mA	+85°C		
DC43c	20	32	mA	+125°C		
DC44d	23	37	mA	-40°C	3.3V	40 MIPS
DC44a	23	37	mA	+25°C		
DC44b	23	37	mA	+85°C		
DC44c	23	37	mA	+125°C		

Note 1: Data in “Typical” column is at 3.3V, +25°C unless otherwise stated.

2: Base Idle current is measured as follows:

- CPU core is off, oscillator is configured in EC mode, OSC1 is driven with external square wave from rail-to-rail
- CLKO is configured as an I/O input pin in the Configuration Word
- All I/O pins are configured as inputs and pulled to VSS
- $\overline{\text{MCLR}}$ = VDD; WDT and FSCM are disabled
- No peripheral modules are operating; however, every peripheral is being clocked (PMDx bits are all zeroed)

3: These parameters are characterized but not tested in manufacturing.

TABLE 25-7: DC CHARACTERISTICS: POWER-DOWN CURRENT (IPD)

DC CHARACTERISTICS			Standard Operating Conditions: 3.0V to 3.6V (unless otherwise stated) Operating temperature -40°C ≤ TA ≤ +85°C for Industrial -40°C ≤ TA ≤ +125°C for Extended			
Param.	**Typical(1)**	**Max.**	**Units**	**Conditions**		
Power-Down Current (IPD)(2,4)						
DC60d	125	500	μA	-40°C	3.3V	Base Power-Down Current
DC60a	135	500	μA	+25°C		
DC60b	235	500	μA	+85°C		
DC60c	565	950	μA	+125°C		
DC61d	40	50	μA	-40°C	3.3V	Watchdog Timer Current: ΔIWDT(3)
DC61a	40	50	μA	+25°C		
DC61b	40	50	μA	+85°C		
DC61c	80	90	μA	+125°C		

Note 1: Data in the Typical column is at 3.3V, +25°C unless otherwise stated.

2: IPD current is measured as follows:

- CPU core is off, oscillator is configured in EC mode, OSC1 is driven with external square wave from rail-to-rail
- CLKO is configured as an I/O input pin in the Configuration Word
- All I/O pins are configured as inputs and pulled to VSS
- $\overline{\text{MCLR}}$ = VDD, WDT and FSCM are disabled
- All peripheral modules are disabled (PMDx bits are all ‘1’s)
- VREGS bit (RCON<8>) = 1 (i.e., core regulator is set to standby while the device is in Sleep mode)

3: The Δ current is the additional current consumed when the WDT module is enabled. This current should be added to the base IPD current.

4: These currents are measured on the device containing the most memory in this family.

© 2011-2012 Microchip Technology Inc.

TABLE 25-8: DC CHARACTERISTICS: DOZE CURRENT (I_{DOZE})

DC CHARACTERISTICS			Standard Operating Conditions: 3.0V to 3.6V (unless otherwise stated) Operating temperature -40°C ≤ TA ≤ +85°C for Industrial -40°C ≤ TA ≤ +125°C for Extended				
Param.	**Typical(1)**	**Max.**	**Doze Ratio**	**Units**	**Conditions**		
Doze Current (I_{DOZE})(2)							
DC73a	30	45	1:2	mA	-40°C	3.3V	40 MIPS
DC73f	16	23	1:64	mA			
DC73g	16	23	1:128	mA			
DC70a	30	45	1:2	mA	+25°C	3.3V	40 MIPS
DC70f	16	23	1:64	mA			
DC70g	16	23	1:128	mA			
DC71a	30	45	1:2	mA	+85°C	3.3V	40 MIPS
DC71f	16	23	1:64	mA			
DC71g	16	23	1:128	mA			
DC72a	30	45	1:2	mA	+125°C	3.3V	40 MIPS
DC72f	16	23	1:64	mA			
DC72g	16	23	1:128	mA			

Note 1: Data in the Typical column is at 3.3V, +25°C unless otherwise stated.

2: I_{DOZE} is primarily a function of the operating voltage and frequency. Other factors, such as I/O pin loading and switching rate, oscillator type, internal code execution pattern and temperature, also have an impact on the current consumption. The test conditions for all I_{DOZE} measurements are as follows:

- Oscillator is configured in EC mode, OSC1 is driven with external square wave from rail-to-rail
- CLKO is configured as an I/O input pin in the Configuration Word
- All I/O pins are configured as inputs and pulled to V_{SS}
- $\overline{MCLR}$ = V_{DD}; WDT and FSCM are disabled
- CPU, SRAM, program memory and data memory are operational
- No peripheral modules are operating; however, every peripheral is being clocked (PMDx bits are all zeroed)
- CPU is executing `while(1)` statement

TABLE 25-9: DC CHARACTERISTICS: I/O PIN INPUT SPECIFICATIONS

DC CHARACTERISTICS			Standard Operating Conditions: 3.0V to 3.6V (unless otherwise stated) Operating temperature -40°C ≤ TA ≤ +85°C for Industrial -40°C ≤ TA ≤ +125°C for Extended				
Param.	**Symbol**	**Characteristic**	**Min.**	**Typ.(1)**	**Max.**	**Units**	**Conditions**
	VIL	**Input Low Voltage**					
DI10		I/O Pins	VSS	—	0.2 VDD	V	
DI15		$\overline{\text{MCLR}}$	VSS	—	0.2 VDD	V	
DI16		I/O Pins with OSC1	VSS	—	0.2 VDD	V	
DI18		SDA1, SCL1	VSS	—	0.3 VDD	V	SMBus disabled
DI19		SDA1, SCL1	VSS	—	0.8	V	SMBus enabled
	VIH	**Input High Voltage**					
DI20		I/O Pins Not 5V Tolerant(4)	0.7 VDD	—	VDD	V	
DI21		I/O Pins 5V Tolerant(4)	0.7 VDD	—	5.5	V	
DI28		SDA1, SCL1	0.7 VDD	—	5.5	V	SMBus disabled
DI29		SDA1, SCL1	2.1	—	5.5	V	SMBus enabled
	ICNPU	**CNx Pull-up Current**					
DI30			—	250	—	μA	VDD = 3.3V, VPIN = VSS
	IIL	**Input Leakage Current(2,3,4)**					
DI50		I/O Pins: 4x Sink Driver Pins RA0-RA2, RB0-RB2, RB5-RB10, RB15	—	—	±2	μA	VSS ≤ VPIN ≤ VDD, Pin at high-impedance
		16x Sink Driver Pins RA3, RA4, RB3, RB4, RB11-RB14	—	—	±8	μA	VSS ≤ VPIN ≤ VDD, Pin at high-impedance
DI55		$\overline{\text{MCLR}}$	—	—	±2	μA	VSS ≤ VPIN ≤ VDD
DI56		OSC1	—	—	±2	μA	VSS ≤ VPIN ≤ VDD, XT and HS modes

Note 1: Data in "Typ" column is at 3.3V, +25°C unless otherwise stated.

2: The leakage current on the $\overline{\text{MCLR}}$ pin is strongly dependent on the applied voltage level. The specified levels represent normal operating conditions. Higher leakage current may be measured at different input voltages.

3: Negative current is defined as current sourced by the pin.

4: See the **"Pin Diagrams"** section for the list of 5V tolerant I/O pins.

5: VIL source < (VSS – 0.3); characterized but not tested.

6: Non-5V tolerant pins VIH source > (VDD + 0.3), 5V tolerant pins VIH source > 5.5V; characterized but not tested.

7: Digital 5V tolerant pins cannot tolerate any "positive" input injection current from input sources > 5.5V.

8: Injection currents > | 0 | can affect the ADC results by approximately 4-6 counts.

9: Any number and/or combination of I/O pins, not excluded under IICL or IICH conditions, are permitted provided the mathematical "absolute instantaneous" sum of the input injection currents from all pins do not exceed the specified limit; characterized but not tested.

© 2011-2012 Microchip Technology Inc.

TABLE 25-9: DC CHARACTERISTICS: I/O PIN INPUT SPECIFICATIONS (CONTINUED)

DC CHARACTERISTICS			Standard Operating Conditions: 3.0V to 3.6V (unless otherwise stated) Operating temperature -40°C ≤ TA ≤ +85°C for Industrial -40°C ≤ TA ≤ +125°C for Extended				
Param.	**Symbol**	**Characteristic**	**Min.**	**Typ.(1)**	**Max.**	**Units**	**Conditions**
DI60a	I_{ICL}	**Input Low Injection Current**	0	—	-5(5,8)	mA	All pins except V_{DD}, V_{SS}, AV_{DD}, AV_{SS}, $\overline{MCLR}$, V_{CAP} and RB5
DI60b	I_{ICH}	**Input High Injection Current**	0	—	+5(6,7,8)	mA	All pins except V_{DD}, V_{SS}, AV_{DD}, AV_{SS}, $\overline{MCLR}$, V_{CAP}, RB5 and digital 5V tolerant designated pins
DI60c	$\sum I_{ICT}$	**Total Input Injection Current** (sum of all I/O and control pins)	-20(9)	—	+20(9)	mA	Absolute instantaneous sum of all ± input injection currents from all I/O pins (| I_{ICL} + | I_{ICH} |) ≤ $\sum I_{ICT}$

Note 1: Data in "Typ" column is at 3.3V, +25°C unless otherwise stated.

2: The leakage current on the $\overline{MCLR}$ pin is strongly dependent on the applied voltage level. The specified levels represent normal operating conditions. Higher leakage current may be measured at different input voltages.

3: Negative current is defined as current sourced by the pin.

4: See the **"Pin Diagrams"** section for the list of 5V tolerant I/O pins.

5: V_{IL} source < (V_{SS} – 0.3); characterized but not tested.

6: Non-5V tolerant pins V_{IH} source > (V_{DD} + 0.3), 5V tolerant pins V_{IH} source > 5.5V; characterized but not tested.

7: Digital 5V tolerant pins cannot tolerate any "positive" input injection current from input sources > 5.5V.

8: Injection currents > | 0 | can affect the ADC results by approximately 4-6 counts.

9: Any number and/or combination of I/O pins, not excluded under I_{ICL} or I_{ICH} conditions, are permitted provided the mathematical "absolute instantaneous" sum of the input injection currents from all pins do not exceed the specified limit; characterized but not tested.

TABLE 25-10: DC CHARACTERISTICS: I/O PIN OUTPUT SPECIFICATIONS

DC CHARACTERISTICS			Standard Operating Conditions: 3.0V to 3.6V (unless otherwise stated) Operating temperature -40°C ≤ TA ≤ +85°C for Industrial -40°C ≤ TA ≤ +125°C for Extended				
Param.	**Symbol**	**Characteristic**	**Min.**	**Typ.**	**Max.**	**Units**	**Conditions**
DO10	VOL	**Output Low Voltage** I/O Pins: 4x Sink Driver Pins – RA0-RA2, RB0-RB2, RB5-RB10, RB15	—	—	0.4	V	IOL ≤ 6 mA, VDD = 3.3V(1)
		Output Low Voltage I/O Pins: 16x Sink Driver Pins – RA3, RA4, RB3, RB4, RB11-RB14	—	—	0.4	V	IOL ≤ 18 mA, VDD = 3.3V(1)
DO20	VOH	**Output High Voltage** I/O Pins: 4x Source Driver Pins – RA0-RA2, RB0-RB2, RB5-RB10, RB15	2.4	—	—	V	IOH ≥ -6 mA, VDD = 3.3V(1)
		Output High Voltage I/O Pins: 16x Source Driver Pins – RA3, RA4, RB3, RB4, RB11-RB14	2.4	—	—	V	IOH ≥ -18 mA, VDD = 3.3V(1)
DO20A	VOH1	**Output High Voltage** I/O Pins: 4x Source Driver Pins – RA0-RA2, RB0-RB2, RB5-RB10, RB15	1.5	—	—	V	IOH ≥ -12 mA, VDD = 3.3V(1)
			2.0	—	—		IOH ≥ -11 mA, VDD = 3.3V(1)
			3.0	—	—		IOH ≥ -3 mA, VDD = 3.3V(1)
		Output High Voltage I/O Pins: 16x Source Driver Pins – RA3, RA4, RB3, RB4, RB11-RB14	1.5	—	—	V	IOH ≥ -30 mA, VDD = 3.3V(1)
			2.0	—	—		IOH ≥ -25 mA, VDD = 3.3V(1)
			3.0	—	—		IOH ≥ -8 mA, VDD = 3.3V(1)

Note 1: These parameters are characterized, but not tested.

TABLE 25-11: ELECTRICAL CHARACTERISTICS: BOR

DC CHARACTERISTICS			Standard Operating Conditions: 3.0V to 3.6V(3) (unless otherwise stated) Operating temperature -40°C ≤ TA ≤ +85°C for Industrial -40°C ≤ TA ≤ +125°C for Extended				
Param.	**Symbol**	**Characteristic**	**Min.(1)**	**Typ.**	**Max.**	**Units**	**Conditions**
BO10	VBOR	BOR Event on VDD Transition High-to-Low BOR Event is Tied to VDD Core Voltage Decrease	2.55	—	2.96	V	(See **Note 2**)

Note 1: These parameters are for design guidance only and are not tested in manufacturing.

2: The device will operate as normal until the VDDMIN threshold is reached.

3: Overall functional device operation at VBORMIN < VDD < VDDMIN is tested but not characterized. All device analog modules, such as the ADC, etc., will function but with degraded performance below VDDMIN.

© 2011-2012 Microchip Technology Inc.

TABLE 25-12: DC CHARACTERISTICS: PROGRAM MEMORY

DC CHARACTERISTICS			Standard Operating Conditions: 3.0V to 3.6V (unless otherwise stated) Operating temperature -40°C ≤ TA ≤ +85°C for Industrial -40°C ≤ TA ≤ +125°C for Extended				
Param.	**Symbol**	**Characteristic**	**Min.**	**Typ.(1)**	**Max.**	**Units**	**Conditions**
		Program Flash Memory					
D130	EP	Cell Endurance	10,000	—	—	E/W	-40°C to +125°C
D131	VPR	VDD for Read	VMIN	—	3.6	V	VMIN = Minimum operating voltage
D132B	VPEW	VDD for Self-Timed Write	VMIN	—	3.6	V	VMIN = Minimum operating voltage
D134	TRETD	Characteristic Retention	20	—	—	Year	Provided no other specifications are violated, -40°C to +125°C
D135	IDDP	Supply Current during Programming	—	10	—	mA	
D137a	TPE	Page Erase Time	20.1	—	26.5	ms	TPE = 168517 FRC cycles, TA = +85°C(2)
D137b	TPE	Page Erase Time	19.5	—	27.3	ms	TPE = 168517 FRC cycles, TA = +125°C(2)
D138a	TWW	Word Write Cycle Time	42.3	—	55.9	µs	TWW = 355 FRC cycles, TA = +85°C(2)
D138b	TWW	Word Write Cycle Time	41.1	—	57.6	µs	TWW = 355 FRC cycles, TA = +125°C(2)

Note 1: Data in "Typ" column is at 3.3V, +25°C unless otherwise stated.

2: Other conditions: FRC = 7.37 MHz, TUN<5:0> = `'b011111` (for Minimum), TUN<5:0> = `'b100000` (for Maximum). This parameter depends on the FRC accuracy (see Table 25-20) and the value of the FRC Oscillator Tuning register (see Register 9-4). For complete details on calculating the Minimum and Maximum time, see **Section 5.3 "Programming Operations"**.

TABLE 25-13: INTERNAL VOLTAGE REGULATOR SPECIFICATIONS

Operating Conditions:	-40°C ≤ TA ≤ +85°C for Industrial -40°C ≤ TA ≤ +125°C for Extended						
Param.	**Symbol**	**Characteristics**	**Min.**	**Typ.**	**Max.**	**Units**	**Comments**
	CEFC	External Filter Capacitor Value(1)	4.7	10	—	µF	Capacitor must be low series resistance (< 0.5 Ohms)

Note 1: Typical VCAP voltage = 2.5 volts when VDD ≥ VDDMIN.

25.2 AC Characteristics and Timing Parameters

This section defines dsPIC33FJ06GS001/101A/102A/202A and dsPIC33FJ09GS302 AC characteristics and timing parameters.

TABLE 25-14: TEMPERATURE AND VOLTAGE SPECIFICATIONS – AC

AC CHARACTERISTICS	**Standard Operating Conditions: 3.0V to 3.6V (unless otherwise stated)** Operating temperature -40°C ≤ TA ≤ +85°C for Industrial -40°C ≤ TA ≤ +125°C for Extended Operating voltage VDD range as described in Table 25-1.

FIGURE 25-1: LOAD CONDITIONS FOR DEVICE TIMING SPECIFICATIONS

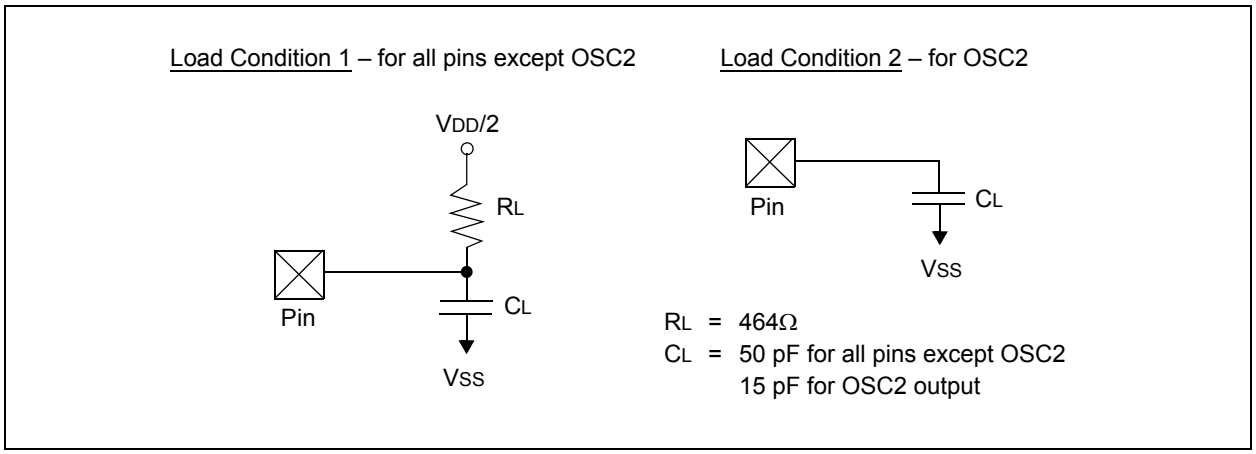

TABLE 25-15: CAPACITIVE LOADING REQUIREMENTS ON OUTPUT PINS

Param.	Symbol	Characteristic	Min.	Typ.	Max.	Units	Conditions
DO50	COSCO	OSC2 Pin	—	—	15	pF	In XT and HS modes when external clock is used to drive OSC1
DO56	CIO	All I/O Pins and OSC2	—	—	50	pF	EC mode
DO58	CB	SCL1, SDA1	—	—	400	pF	In I^{2}C™ mode

© 2011-2012 Microchip Technology Inc.

FIGURE 25-2: EXTERNAL CLOCK TIMING

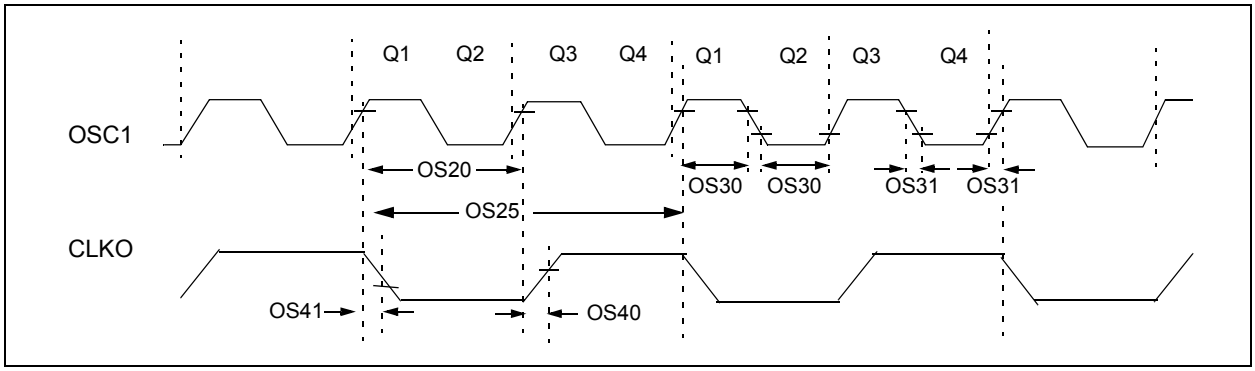

TABLE 25-16: EXTERNAL CLOCK TIMING REQUIREMENTS

AC CHARACTERISTICS			Standard Operating Conditions: 3.0V to 3.6V (unless otherwise stated) Operating temperature -40°C ≤ TA ≤ +85°C for Industrial -40°C ≤ TA ≤ +125°C for Extended				
Param.	**Symbol**	**Characteristic**	**Min.**	**Typ.(1)**	**Max.**	**Units**	**Conditions**
OS10	FIN	External CLKI Frequency (External clocks allowed only in EC and ECPLL modes)	DC	—	40	MHz	EC
		Oscillator Crystal Frequency	3.0 10	— —	10 32	MHz MHz	XT HS
OS20	TOSC	TOSC = 1/FOSC	12.5	—	DC	ns	
OS25	TCY	Instruction Cycle Time(2)	25	—	DC	ns	
OS30	TosL, TosH	External Clock in (OSC1) High or Low Time	0.375 x TOSC	—	0.625 x TOSC	ns	EC
OS31	TosR, TosF	External Clock in (OSC1) Rise or Fall Time	—	—	20	ns	EC
OS40	TckR	CLKO Rise Time(3)	—	5.2	—	ns	
OS41	TckF	CLKO Fall Time(3)	—	5.2	—	ns	
OS42	GM	External Oscillator Transconductance(4)	14	16	18	mA/V	VDD = 3.3V TA = +25ºC

Note 1: Data in “Typ” column is at 3.3V, +25°C unless otherwise stated.

2: Instruction cycle period (TCY) equals two times the input oscillator time base period. All specified values are based on characterization data for that particular oscillator type, under standard operating conditions, with the device executing code. Exceeding these specified limits may result in an unstable oscillator operation and/or higher than expected current consumption. All devices are tested to operate at “min.” values with an external clock applied to the OSC1/CLKI pin. When an external clock input is used, the “max.” cycle time limit is “DC” (no clock) for all devices.

3: Measurements are taken in EC mode. The CLKO signal is measured on the OSC2 pin.

4: Data for this parameter is Preliminary. This parameter is characterized, but not tested in manufacturing.

TABLE 25-17: PLL CLOCK TIMING SPECIFICATIONS (V_{DD} = 3.0V TO 3.6V)

AC CHARACTERISTICS			Standard Operating Conditions: 3.0V to 3.6V (unless otherwise stated) Operating temperature -40°C ≤ TA ≤ +85°C for Industrial -40°C ≤ TA ≤ +125°C for Extended				
Param.	**Symbol**	**Characteristic**	**Min.**	**Typ.(1)**	**Max.**	**Units**	**Conditions**
OS50	FPLLI	PLL Voltage Controlled Oscillator (VCO) Input Frequency Range	0.8	—	8	MHz	ECPLL, XTPLL modes
OS51	FSYS	On-Chip VCO System Frequency	100	—	200	MHz	
OS52	TLOCK	PLL Start-up Time (Lock Time)	0.9	1.5	3.1	mS	
OS53	DCLK	CLKO Stability (Jitter)(2)	-3	0.5	3	%	Measured over 100 ms period

Note 1: Data in “Typ” column is at 3.3V, +25°C unless otherwise stated. Parameters are for design guidance only and are not tested in manufacturing.

2: These parameters are characterized by similarity, but are not tested in manufacturing. This specification is based on clock cycle by clock cycle measurements. To calculate the effective jitter for individual time bases or communication clocks use this formula:

$$Peripheral\ Clock\ Jitter = \frac{D_{CLK}}{\sqrt{\left(\frac{F_{OSC}}{Peripheral\ Bit\ Rate\ Clock}\right)}}$$

For example: FOSC = 32 MHz, DCLK = 3%, SPI bit rate clock (i.e., SCK) is 2 MHz.

$$SPI\ SCK\ Jitter = \left[\frac{D_{CLK}}{\sqrt{\left(\frac{32\ MHz}{2\ MHz}\right)}}\right] = \left[\frac{3\%}{\sqrt{16}}\right] = \left[\frac{3\%}{4}\right] = 0.75\%$$

TABLE 25-18: AUXILIARY PLL CLOCK TIMING SPECIFICATIONS (V_{DD} = 3.0V TO 3.6V)

AC CHARACTERISTICS			Standard Operating Conditions: 3.0V to 3.6V (unless otherwise stated) Operating temperature -40°C ≤ TA ≤ +85°C for Industrial -40°C ≤ TA ≤ +125°C for Extended				
Param.	**Symbol**	**Characteristic**	**Min.**	**Typ.(1)**	**Max.**	**Units**	**Conditions**
OS56	FHPOUT	On-Chip 16x PLL CCO Frequency	112	118	120	MHz	
OS57	FHPIN	On-Chip 16x PLL Phase Detector Input Frequency	7.0	7.37	7.5	MHz	
OS58	TSU	Frequency Generator Lock Time	—	—	10	µs	

Note 1: Data in “Typ” column is at 3.3V, +25°C unless otherwise stated. Parameters are for design guidance only and are not tested in manufacturing.

© 2011-2012 Microchip Technology Inc.

TABLE 25-19: AC CHARACTERISTICS: INTERNAL FRC ACCURACY

AC CHARACTERISTICS		Standard Operating Conditions: 3.0V to 3.6V (unless otherwise stated) Operating temperature -40°C ≤ TA ≤ +85°C for industrial -40°C ≤ TA ≤ +125°C for Extended					
Param.	**Characteristic**	**Min.**	**Typ.**	**Max.**	**Units**	**Conditions**	
	Internal FRC Accuracy @ FRC Frequency = 7.37 MHz(1)						
F20a	FRC	-2	—	+2	%	-40°C ≤ TA ≤ +85°C	VDD = 3.0-3.6V
F20b	FRC	-5	—	+5	%	-40°C ≤ TA ≤ +125°C	VDD = 3.0-3.6V

Note 1: Frequency is calibrated at +25°C and 3.3V. TUNx bits can be used to compensate for temperature drift.

TABLE 25-20: INTERNAL LPRC ACCURACY

AC CHARACTERISTICS		Standard Operating Conditions: 3.0V to 3.6V (unless otherwise stated) Operating temperature -40°C ≤ TA ≤ +85°C for Industrial -40°C ≤ TA ≤ +125°C for Extended					
Param.	**Characteristic**	**Min.**	**Typ.**	**Max.**	**Units**	**Conditions**	
	LPRC @ 32.768 kHz(1)						
F21a	LPRC	-20	—	+20	%	-40°C ≤ TA ≤ +85°C	VDD = 3.0-3.6V
F21b	LPRC	-70	—	+70	%	-40°C ≤ TA ≤ +125°C	VDD = 3.0-3.6V

Note 1: The change of LPRC frequency as VDD changes.

FIGURE 25-3: I/O TIMING CHARACTERISTICS

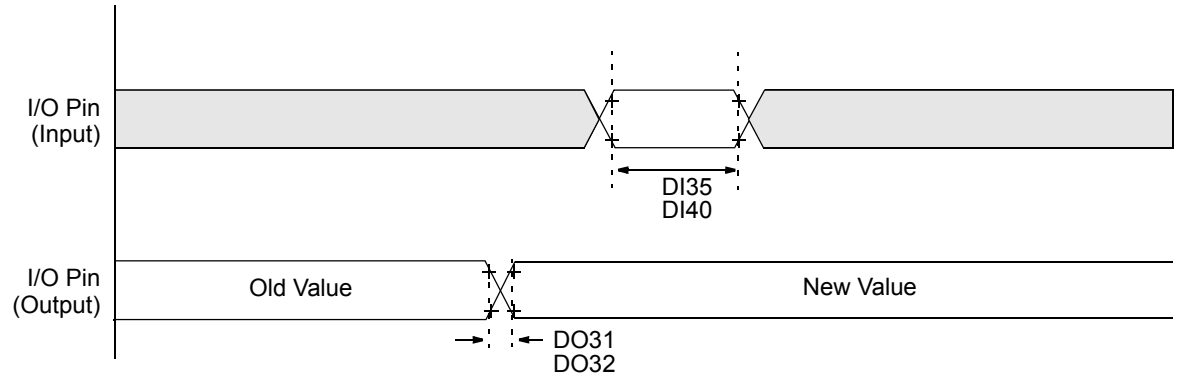

Note: Refer to Figure 25-1 for load conditions.

TABLE 25-21: I/O TIMING REQUIREMENTS

AC CHARACTERISTICS			Standard Operating Conditions: 3.0V to 3.6V (unless otherwise stated) Operating temperature -40°C ≤ TA ≤ +85°C for Industrial -40°C ≤ TA ≤ +125°C for Extended				
Param.	**Symbol**	**Characteristic**	**Min.**	**Typ.(1)**	**Max.**	**Units**	**Conditions**
DO31	TIOR	I/O Pins: 4x Sink Driver Pins RA0-RA2, RB0-RB2, RB5-RB10, RB15	—	10	25	ns	Refer to Figure 25-1 for test conditions
		I/O Pins: 16x Sink Driver Pins RA3, RA4, RB3, RB4, RB11-RB14	—	6	15	ns	
DO32	TIOF	I/O Pins: 4x Sink Driver Pins RA0-RA2, RB0-RB2, RB5-RB10, RB15	—	10	25	ns	Refer to Figure 25-1 for test conditions
		I/O Pins: 16x Sink Driver Pins RA3, RA4, RB3, RB4, RB11-RB14	—	6	15	ns	
DI35	TINP	INTx Pin High or Low Time (input)	20	—	—	ns	
DI40	TRBP	CNx High or Low Time (input)	2	—	—	TCY	

Note 1: Data in “Typ” column is at 3.3V, +25°C unless otherwise stated.

© 2011-2012 Microchip Technology Inc.

FIGURE 25-4: RESET, WATCHDOG TIMER, OSCILLATOR START-UP TIMER AND POWER-UP TIMER TIMING CHARACTERISTICS

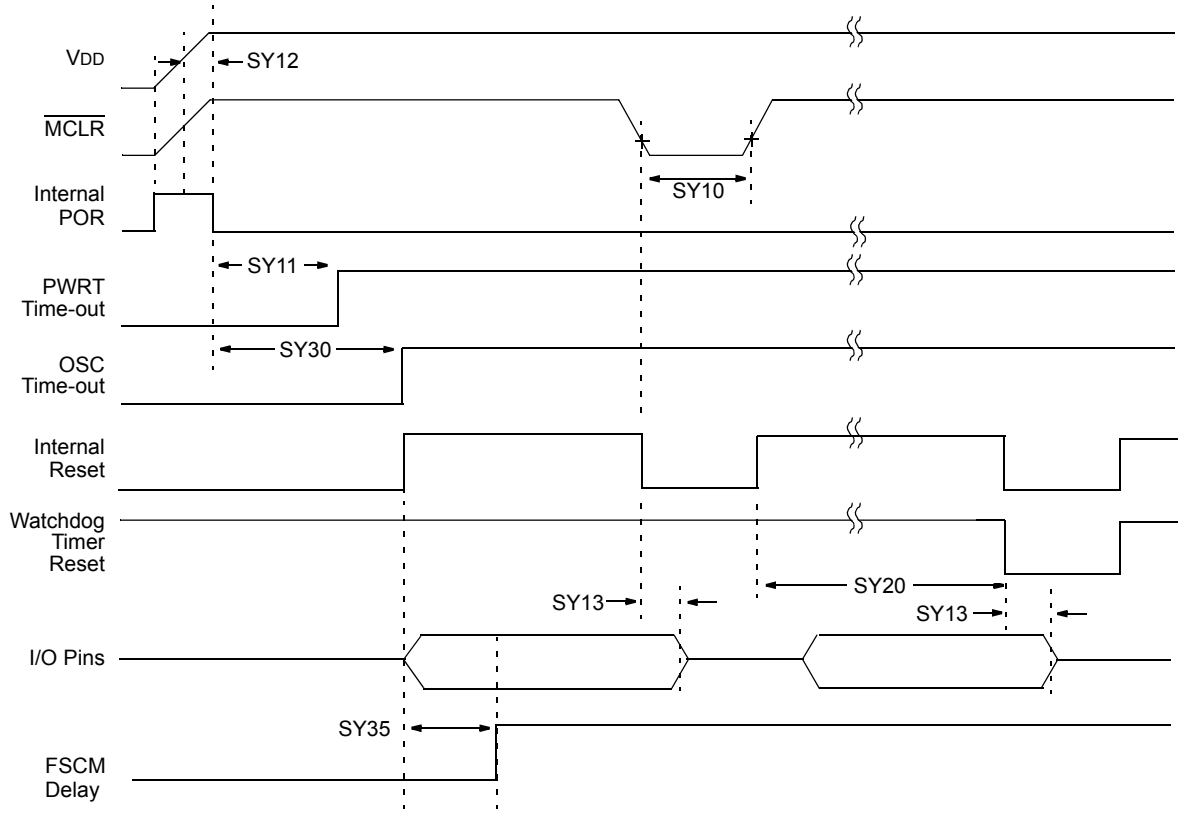

Note: Refer to Figure 25-1 for load conditions.

TABLE 25-22: RESET, WATCHDOG TIMER, OSCILLATOR START-UP TIMER, POWER-UP TIMER TIMING REQUIREMENTS

AC CHARACTERISTICS			Standard Operating Conditions: 3.0V to 3.6V (unless otherwise stated) Operating temperature -40°C ≤ TA ≤ +85°C for Industrial -40°C ≤ TA ≤ +125°C for Extended				
Param.	**Symbol**	**Characteristic(1)**	**Min.**	**Typ.(2)**	**Max.**	**Units**	**Conditions**
SY10	TMCL	$\overline{\text{MCLR}}$ Pulse Width (low)	2	—	—	μs	-40°C to +125°C
SY11	TPWRT	Power-up Timer Period	—	64	—	ms	-40°C to +125°C
SY12	TPOR	Power-on Reset Delay	3	10	30	μs	-40°C to +125°C
SY13	TIOZ	I/O High-Impedance from $\overline{\text{MCLR}}$ Low or Watchdog Timer Reset	0.68	0.72	1.2	μs	
SY30	TOST	Oscillator Start-up Time	—	1024 TOSC	—	—	TOSC = OSC1 period

Note 1: These parameters are characterized but not tested in manufacturing.
2: Data in “Typ” column is at 3.3V, +25°C unless otherwise stated.

FIGURE 25-5: TIMER1 AND TIMER2 EXTERNAL CLOCK TIMING CHARACTERISTICS

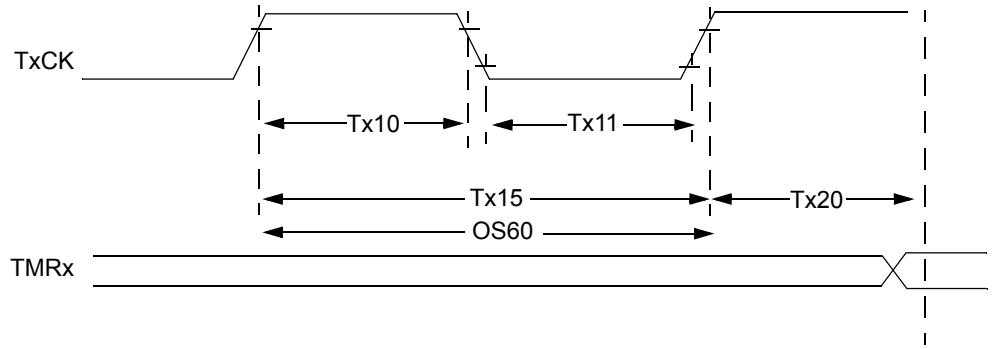

Note: Refer to Figure 25-1 for load conditions.

TABLE 25-23: TIMER1 EXTERNAL CLOCK TIMING REQUIREMENTS(1)

AC CHARACTERISTICS				Standard Operating Conditions: 3.0V to 3.6V (unless otherwise stated) Operating temperature -40°C ≤ TA ≤ +85°C for Industrial -40°C ≤ TA ≤ +125°C for Extended				
Param.	**Symbol**	**Characteristic**		**Min.**	**Typ.**	**Max.**	**Units**	**Conditions**
TA10	TTXH	TxCK High Time	Synchronous, no prescaler	TCY + 20	—	—	ns	Must also meet Parameter TA15, N = prescale value (1, 8, 64, 256)
			Synchronous, with prescaler	(TCY + 20)/N	—	—	ns	
			Asynchronous	20	—	—	ns	
TA11	TTXL	TxCK Low Time	Synchronous, no prescaler	TCY + 20	—	—	ns	Must also meet Parameter TA15, N = prescale value (1, 8, 64, 256)
			Synchronous, with prescaler	(TCY + 20)/N	—	—	ns	
			Asynchronous	20	—	—	ns	
TA15	TTXP	TxCK Input Period	Synchronous, no prescaler	2 TCY + 40	—	—	ns	
			Synchronous, with prescaler	Greater of: 40 ns or (2 TCY + 40)/N	—	—	—	N = prescale value (1, 8, 64, 256)
			Asynchronous	40	—	—	ns	
OS60	Ft1	T1CK Oscillator Input Frequency Range (oscillator enabled by setting bit, TCS (T1CON<1>))		DC	—	50	kHz	
TA20	TCKEXTMRL	Delay from External TxCK Clock Edge to Timer Increment		0.75 TCY + 40	—	1.75 TCY + 40	—	

Note 1: Timer1 is a Type A.

© 2011-2012 Microchip Technology Inc.

TABLE 25-24: TIMER2 EXTERNAL CLOCK TIMING REQUIREMENTS

AC CHARACTERISTICS				Standard Operating Conditions: 3.0V to 3.6V (unless otherwise stated) Operating temperature -40°C ≤ TA ≤ +85°C for Industrial -40°C ≤ TA ≤ +125°C for Extended				
Param.	**Symbol**	**Characteristic**		**Min.**	**Typ.**	**Max.**	**Units**	**Conditions**
TB10	TTXH	TxCK High Time	Synchronous	Greater of: 20 ns or (TCY + 20)/N	—	—	ns	Must also meet Parameter TB15 N = prescale value (1, 8, 64, 256)
TB11	TTXL	TxCK Low Time	Synchronous	Greater of: 20 ns or (TCY + 20)/N	—	—	ns	Must also meet Parameter TB15 N = prescale value (1, 8, 64, 256)
TB15	TTXP	TxCK Input Period	Synchronous, no prescaler	TCY + 40	—	—	ns	N = prescale value (1, 8, 64, 256)
			Synchronous, with prescaler	Greater of: 20 ns or (TCY + 40)/N				
TB20	TCKEXTMRL	Delay from External TxCK Clock Edge to Timer Increment		0.5 TCY	—	1.5 TCY	—	

FIGURE 25-6: INPUT CAPTURE (CAP1) TIMING CHARACTERISTICS

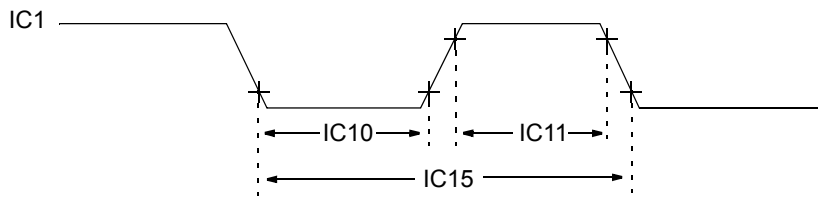

Note: Refer to Figure 25-1 for load conditions.

TABLE 25-25: INPUT CAPTURE TIMING REQUIREMENTS

AC CHARACTERISTICS				Standard Operating Conditions: 3.0V to 3.6V (unless otherwise stated) Operating temperature -40°C ≤ TA ≤ +85°C for Industrial -40°C ≤ TA ≤ +125°C for Extended			
Param.	**Symbol**	**Characteristic(1)**		**Min.**	**Max.**	**Units**	**Conditions**
IC10	TccL	IC1 Input Low Time	No prescaler	0.5 TCY + 20	—	ns	
			With prescaler	10	—	ns	
IC11	TccH	IC1 Input High Time	No prescaler	0.5 TCY + 20	—	ns	
			With prescaler	10	—	ns	
IC15	TccP	IC1 Input Period		(TCY + 40)/N	—	ns	N = prescale value (1, 4, 16)

Note 1: These parameters are characterized but not tested in manufacturing.

FIGURE 25-7: OUTPUT COMPARE MODULE (OC1) TIMING CHARACTERISTICS

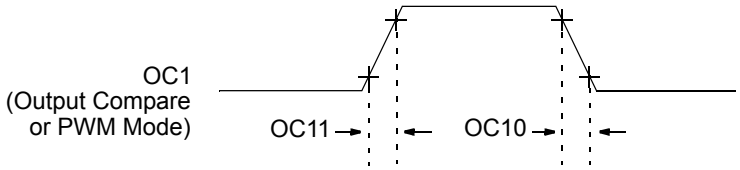

Note: Refer to Figure 25-1 for load conditions.

TABLE 25-26: OUTPUT COMPARE MODULE TIMING REQUIREMENTS

AC CHARACTERISTICS			Standard Operating Conditions: 3.0V to 3.6V (unless otherwise stated) Operating temperature -40°C ≤ TA ≤ +85°C for Industrial -40°C ≤ TA ≤ +125°C for Extended				
Param.	**Symbol**	**Characteristic(1)**	**Min.**	**Typ.**	**Max.**	**Units**	**Conditions**
OC10	TccF	OC1 Output Fall Time	—	—	—	ns	See Parameter DO32
OC11	TccR	OC1 Output Rise Time	—	—	—	ns	See Parameter DO31

Note 1: These parameters are characterized but not tested in manufacturing.

© 2011-2012 Microchip Technology Inc.

FIGURE 25-8: OC/PWM MODULE TIMING CHARACTERISTICS

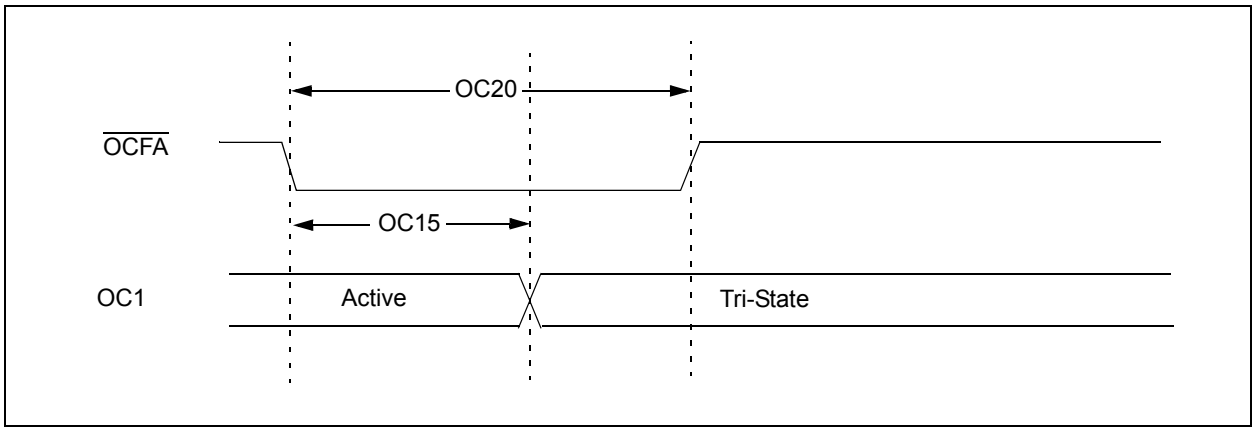

TABLE 25-27: SIMPLE OC/PWM MODE TIMING REQUIREMENTS

AC CHARACTERISTICS			Standard Operating Conditions: 3.0V to 3.6V (unless otherwise stated) Operating temperature -40°C ≤ TA ≤ +85°C for Industrial -40°C ≤ TA ≤ +125°C for Extended				
Param.	**Symbol**	**Characteristic(1)**	**Min.**	**Typ.**	**Max.**	**Units**	**Conditions**
OC15	TFD	Fault Input to PWM I/O Change	—	—	TCY + 20	ns	
OC20	TFLT	Fault Input Pulse Width	TCY + 20	—	—	ns	

Note 1: These parameters are characterized but not tested in manufacturing.

FIGURE 25-9: HIGH-SPEED PWM MODULE FAULT TIMING CHARACTERISTICS

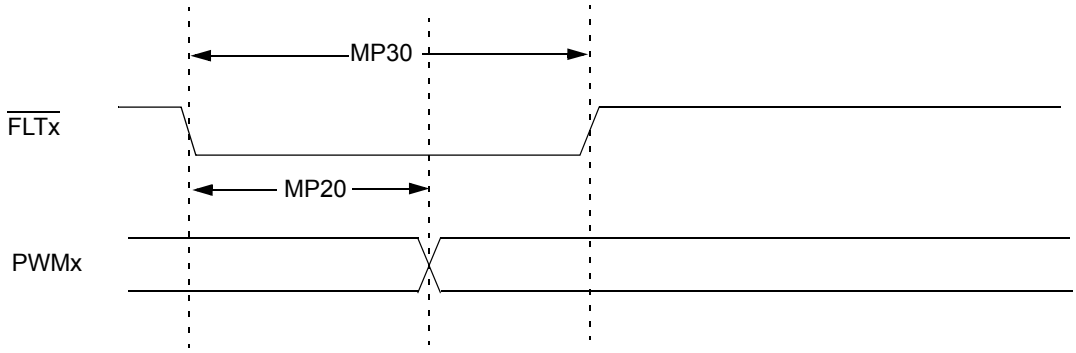

FIGURE 25-10: HIGH-SPEED PWM MODULE TIMING CHARACTERISTICS

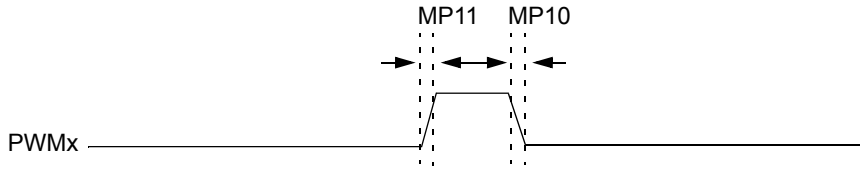

Note: Refer to Figure 25-1 for load conditions.

TABLE 25-28: HIGH-SPEED PWM MODULE TIMING REQUIREMENTS

AC CHARACTERISTICS			Standard Operating Conditions: 3.0V to 3.6V (unless otherwise stated) Operating temperature -40°C ≤ TA ≤ +85°C for Industrial -40°C ≤ TA ≤ +125°C for Extended				
Param.	**Symbol**	**Characteristic(1)**	**Min.**	**Typ.**	**Max.**	**Units**	**Conditions**
MP10	TFPWM	PWM Output Fall Time	—	2.5	—	ns	
MP11	TRPWM	PWM Output Rise Time	—	2.5	—	ns	
MP20	TFD	Fault Input ↓ to PWM I/O Change	—	—	15	ns	
MP30	TFH	Minimum PWM Fault Pulse Width	8	—	—	ns	DTC<10> = 10
MP31	TPDLY	Tap Delay	1.04	—	—	ns	ACLK = 120 MHz
MP32	ACLK	PWM Input Clock	—	—	120	MHz	See **Note 2**, **Note 3**

Note 1: These parameters are characterized but not tested in manufacturing.

2: This parameter is a maximum allowed input clock for the PWM module.

3: The maximum value for this parameter applies to dsPIC33FJ06GS101A/102A/202A/302 devices only.

© 2011-2012 Microchip Technology Inc.

TABLE 25-29: SPIx MAXIMUM DATA/CLOCK RATE SUMMARY

AC CHARACTERISTICS			Standard Operating Conditions: 3.0V to 3.6V (unless otherwise stated) Operating temperature -40°C ≤ TA ≤ +85°C for Industrial -40°C ≤ TA ≤ +125°C for Extended			
Maximum Data Rate	**Master Transmit Only (Half-Duplex)**	**Master Transmit/Receive (Full-Duplex)**	**Slave Transmit/Receive (Full-Duplex)**	**CKE**	**CKP**	**SMP**
15 MHz	Table 25-30	—	—	0,1	0,1	0,1
9 MHz	—	Table 25-31	—	1	0,1	1
9 MHz	—	Table 25-32	—	0	0,1	1
15 MHz	—	—	Table 25-33	1	0	0
11 MHz	—	—	Table 25-34	1	1	0
15 MHz	—	—	Table 25-35	0	1	0
11 MHz	—	—	Table 25-36	0	0	0

FIGURE 25-11: SPIx MASTER MODE (HALF-DUPLEX, TRANSMIT ONLY, CKE = 0) TIMING CHARACTERISTICS

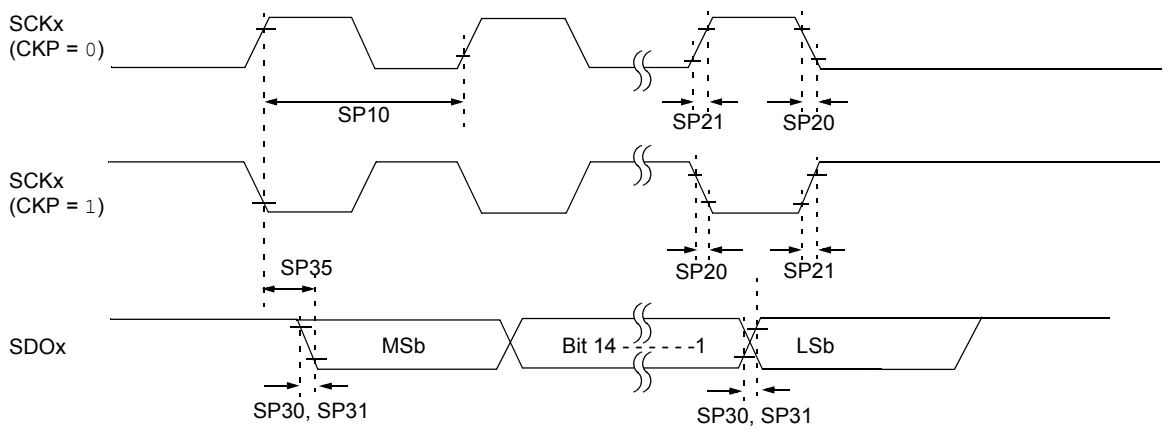

Note: Refer to Figure 25-1 for load conditions.

FIGURE 25-12: SPIx MASTER MODE (HALF-DUPLEX, TRANSMIT ONLY, CKE = 1) TIMING CHARACTERISTICS

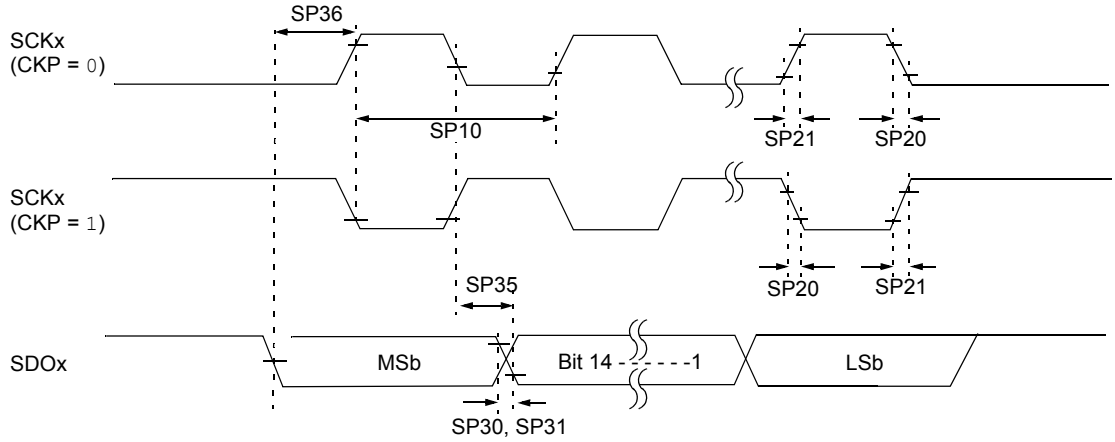

Note: Refer to Figure 25-1 for load conditions.

TABLE 25-30: SPIx MASTER MODE (HALF-DUPLEX, TRANSMIT ONLY) TIMING REQUIREMENTS

AC CHARACTERISTICS			Standard Operating Conditions: 3.0V to 3.6V (unless otherwise stated) Operating temperature -40°C ≤ TA ≤ +85°C for Industrial -40°C ≤ TA ≤ +125°C for Extended				
Param No.	**Symbol**	**Characteristic(1)**	**Min**	**Typ(2)**	**Max**	**Units**	**Conditions**
SP10	TscP	Maximum SCKx Frequency	—	—	15	MHz	See **Note 3**
SP20	TscF	SCKx Output Fall Time	—	—	—	ns	See Parameter DO32 and **Note 4**
SP21	TscR	SCKx Output Rise Time	—	—	—	ns	See Parameter DO31 and **Note 4**
SP30	TdoF	SDOx Data Output Fall Time	—	—	—	ns	See Parameter DO32 and **Note 4**
SP31	TdoR	SDOx Data Output Rise Time	—	—	—	ns	See Parameter DO31 and **Note 4**
SP35	TscH2doV, TscL2doV	SDOx Data Output Valid after SCKx Edge	—	6	20	ns	
SP36	TdiV2scH, TdiV2scL	SDOx Data Output Setup to First SCKx Edge	30	—	—	ns	

Note 1: These parameters are characterized, but are not tested in manufacturing.

2: Data in “Typ” column is at 3.3V, 25°C unless otherwise stated.

3: The minimum clock period for SCKx is 66.7 ns. Therefore, the clock generated in master mode must not violate this specification.

4: Assumes 50 pF load on all SPIx pins.

© 2011-2012 Microchip Technology Inc.

FIGURE 25-13: SPIx MASTER MODE (FULL-DUPLEX, CKE = 1, CKP = x, SMP = 1) TIMING CHARACTERISTICS

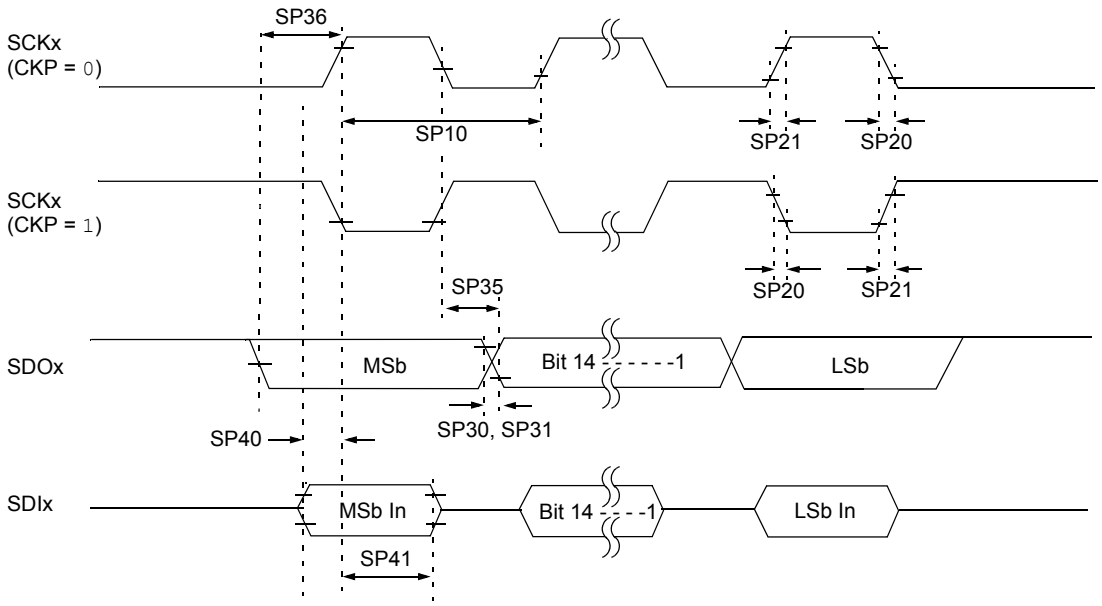

Note: Refer to Figure 25-1 for load conditions.

TABLE 25-31: SPIx MASTER MODE (FULL-DUPLEX, CKE = 1, CKP = x, SMP = 1) TIMING REQUIREMENTS

AC CHARACTERISTICS			Standard Operating Conditions: 3.0V to 3.6V (unless otherwise stated) Operating temperature -40°C ≤ TA ≤ +85°C for Industrial -40°C ≤ TA ≤ +125°C for Extended				
Param No.	**Symbol**	**Characteristic(1)**	**Min**	**Typ(2)**	**Max**	**Units**	**Conditions**
SP10	TscP	Maximum SCKx Frequency	—	—	9	MHz	See **Note 3**
SP20	TscF	SCKx Output Fall Time	—	—	—	ns	See Parameter DO32 and **Note 4**
SP21	TscR	SCKx Output Rise Time	—	—	—	ns	See Parameter DO31 and **Note 4**
SP30	TdoF	SDOx Data Output Fall Time	—	—	—	ns	See Parameter DO32 and **Note 4**
SP31	TdoR	SDOx Data Output Rise Time	—	—	—	ns	See Parameter DO31 and **Note 4**
SP35	TscH2doV, TscL2doV	SDOx Data Output Valid after SCKx Edge	—	6	20	ns	
SP36	TdoV2sc, TdoV2scL	SDOx Data Output Setup to First SCKx Edge	30	—	—	ns	
SP40	TdiV2scH, TdiV2scL	Setup Time of SDIx Data Input to SCKx Edge	30	—	—	ns	
SP41	TscH2diL, TscL2diL	Hold Time of SDIx Data Input to SCKx Edge	30	—	—	ns	

Note 1: These parameters are characterized, but are not tested in manufacturing.
2: Data in "Typ" column is at 3.3V, 25°C unless otherwise stated.
3: The minimum clock period for SCKx is 111 ns. The clock generated in master mode must not violate this specification.
4: Assumes 50 pF load on all SPIx pins.

FIGURE 25-14: SPIx MASTER MODE (FULL-DUPLEX, CKE = 0, CKP = x, SMP = 1) TIMING CHARACTERISTICS

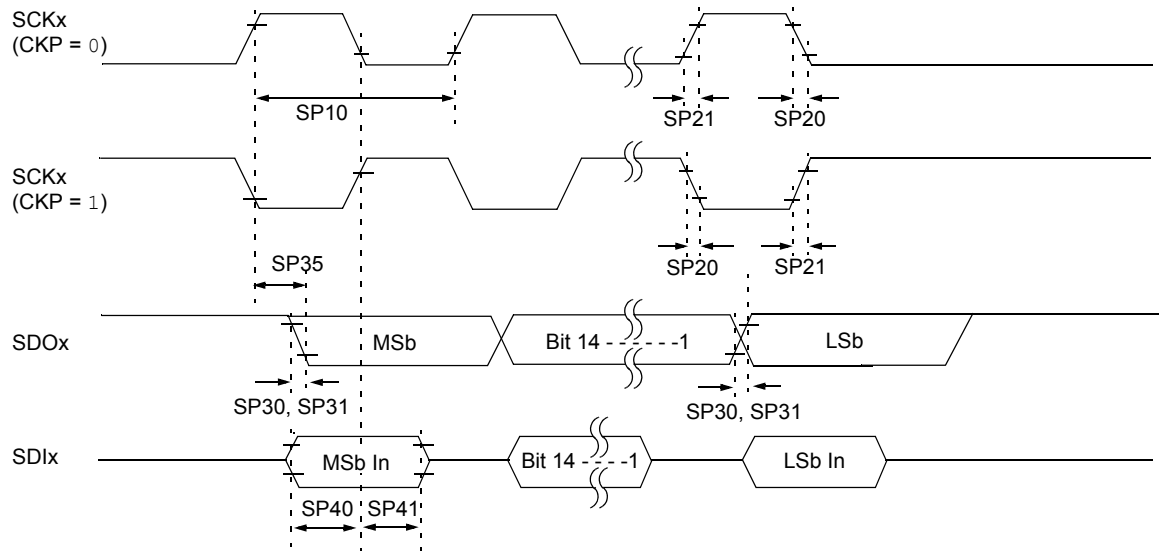

Note: Refer to Figure 25-1 for load conditions.

TABLE 25-32: SPIx MASTER MODE (FULL-DUPLEX, CKE = 0, CKP = x, SMP = 1) TIMING REQUIREMENTS

AC CHARACTERISTICS			Standard Operating Conditions: 3.0V to 3.6V (unless otherwise stated) Operating temperature -40°C ≤ TA ≤ +85°C for Industrial -40°C ≤ TA ≤ +125°C for Extended				
Param No.	**Symbol**	**Characteristic(1)**	**Min**	**Typ(2)**	**Max**	**Units**	**Conditions**
SP10	TscP	Maximum SCKx Frequency	—	—	9	MHz	-40ºC to +125ºC and see **Note 3**
SP20	TscF	SCKx Output Fall Time	—	—	—	ns	See Parameter DO32 and **Note 4**
SP21	TscR	SCKx Output Rise Time	—	—	—	ns	See Parameter DO31 and **Note 4**
SP30	TdoF	SDOx Data Output Fall Time	—	—	—	ns	See Parameter DO32 and **Note 4**
SP31	TdoR	SDOx Data Output Rise Time	—	—	—	ns	See Parameter DO31 and **Note 4**
SP35	TscH2doV, TscL2doV	SDOx Data Output Valid after SCKx Edge	—	6	20	ns	
SP36	TdoV2scH, TdoV2scL	SDOx Data Output Setup to First SCKx Edge	30	—	—	ns	
SP40	TdiV2scH, TdiV2scL	Setup Time of SDIx Data Input to SCKx Edge	30	—	—	ns	
SP41	TscH2diL, TscL2diL	Hold Time of SDIx Data Input to SCKx Edge	30	—	—	ns	

Note 1: These parameters are characterized, but are not tested in manufacturing.

2: Data in “Typ” column is at 3.3V, 25°C unless otherwise stated.

3: The minimum clock period for SCKx is 111 ns. The clock generated in master mode must not violate this specification.

4: Assumes 50 pF load on all SPIx pins.

© 2011-2012 Microchip Technology Inc.

FIGURE 25-15: SPIx SLAVE MODE (FULL-DUPLEX, CKE = 1, CKP = 0, SMP = 0) TIMING CHARACTERISTICS

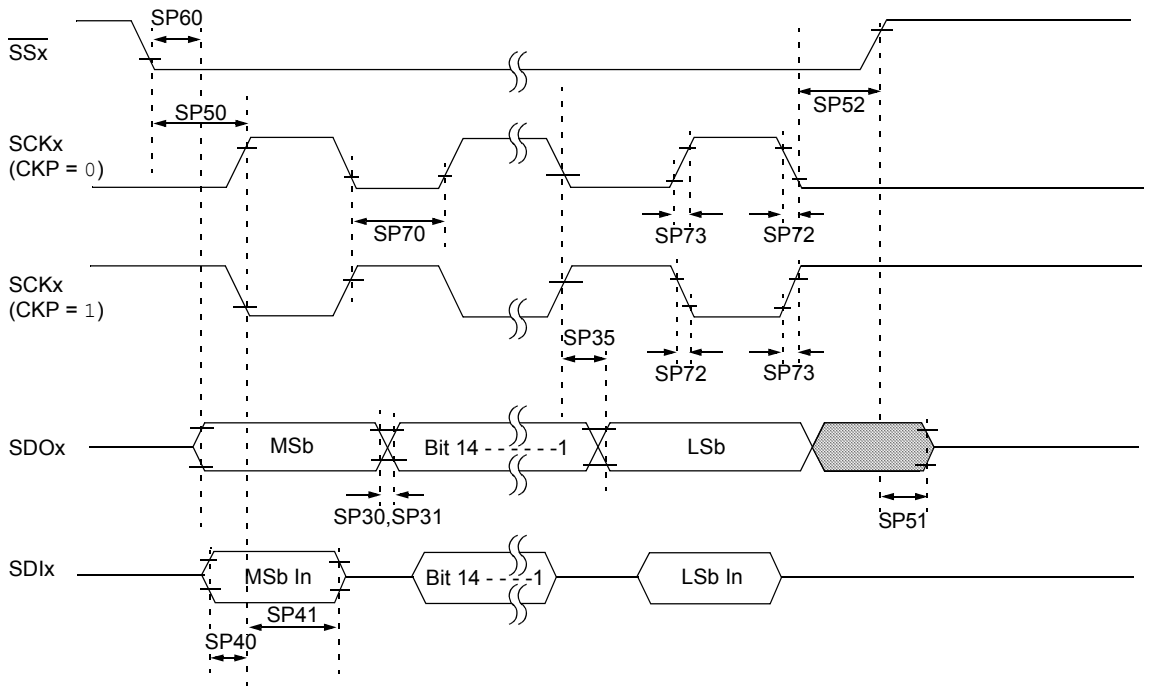

Note: Refer to Figure 25-1 for load conditions.

TABLE 25-33: SPIx SLAVE MODE (FULL-DUPLEX, CKE = 1, CKP = 0, SMP = 0) TIMING REQUIREMENTS

AC CHARACTERISTICS			Standard Operating Conditions: 3.0V to 3.6V (unless otherwise stated) Operating temperature -40°C ≤ TA ≤ +85°C for Industrial -40°C ≤ TA ≤ +125°C for Extended				
Param No.	**Symbol**	**Characteristic(1)**	**Min**	**Typ(2)**	**Max**	**Units**	**Conditions**
SP70	TscP	Maximum SCKx Input Frequency	—	—	15	MHz	See **Note 3**
SP72	TscF	SCKx Input Fall Time	—	—	—	ns	See Parameter DO32 and **Note 4**
SP73	TscR	SCKx Input Rise Time	—	—	—	ns	See Parameter DO31 and **Note 4**
SP30	TdoF	SDOx Data Output Fall Time	—	—	—	ns	See Parameter DO32 and **Note 4**
SP31	TdoR	SDOx Data Output Rise Time	—	—	—	ns	See Parameter DO31 and **Note 4**
SP35	TscH2doV, TscL2doV	SDOx Data Output Valid after SCKx Edge	—	6	20	ns	
SP36	TdoV2scH, TdoV2scL	SDOx Data Output Setup to First SCKx Edge	30	—	—	ns	
SP40	TdiV2scH, TdiV2scL	Setup Time of SDIx Data Input to SCKx Edge	30	—	—	ns	
SP41	TscH2diL, TscL2diL	Hold Time of SDIx Data Input to SCKx Edge	30	—	—	ns	
SP50	TssL2scH, TssL2scL	$\overline{SSx}$ ↓ to SCKx ↑ or SCKx Input	120	—	—	ns	
SP51	TssH2doZ	$\overline{SSx}$ ↑ to SDOx Output High-Impedance	10	—	50	ns	See **Note 4**
SP52	TscH2ssH TscL2ssH	$\overline{SSx}$ after SCKx Edge	1.5 TCY + 40	—	—	ns	See **Note 4**
SP60	TssL2doV	SDOx Data Output Valid after $\overline{SSx}$ Edge	—	—	50	ns	

Note 1: These parameters are characterized, but are not tested in manufacturing.

2: Data in “Typ” column is at 3.3V, 25°C unless otherwise stated.

3: The minimum clock period for SCKx is 66.7 ns. Therefore, the SCKx clock generated by the master must not violate this specification.

4: Assumes 50 pF load on all SPIx pins.

© 2011-2012 Microchip Technology Inc.

FIGURE 25-16: SPIx SLAVE MODE (FULL-DUPLEX, CKE = 1, CKP = 1, SMP = 0) TIMING CHARACTERISTICS

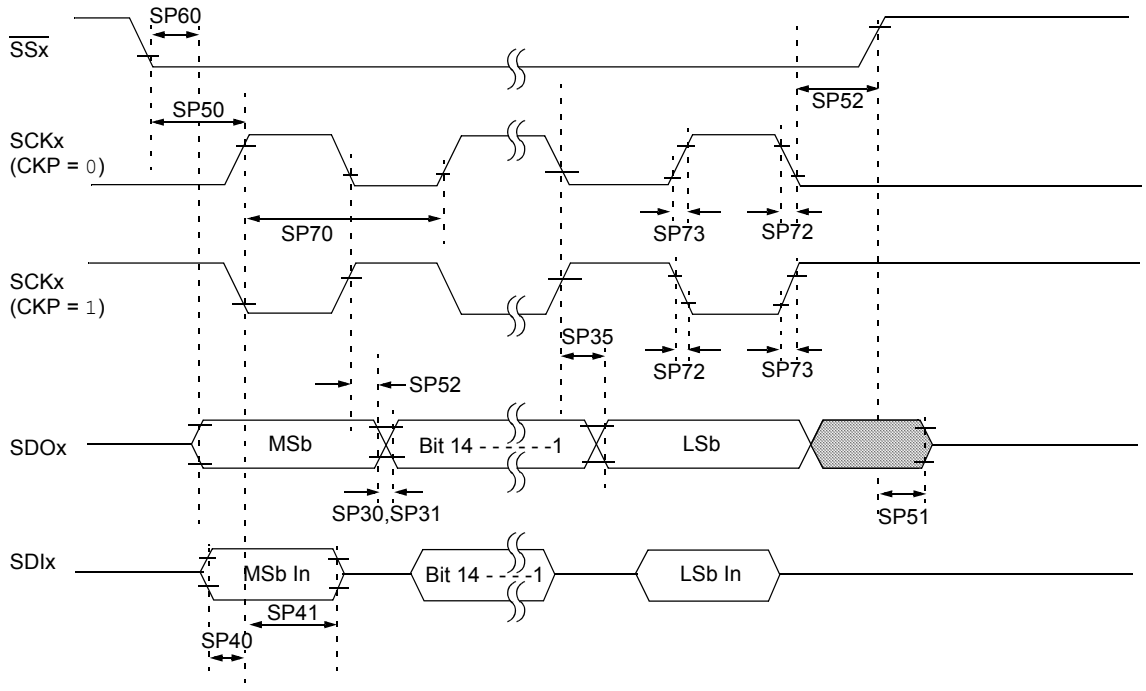

Note: Refer to Figure 25-1 for load conditions.

TABLE 25-34: SPIx SLAVE MODE (FULL-DUPLEX, CKE = 1, CKP = 1, SMP = 0) TIMING REQUIREMENTS

AC CHARACTERISTICS			Standard Operating Conditions: 3.0V to 3.6V (unless otherwise stated) Operating temperature -40°C ≤ TA ≤ +85°C for Industrial -40°C ≤ TA ≤ +125°C for Extended				
Param No.	**Symbol**	**Characteristic(1)**	**Min**	**Typ(2)**	**Max**	**Units**	**Conditions**
SP70	TscP	Maximum SCKx Input Frequency	—	—	11	MHz	See **Note 3**
SP72	TscF	SCKx Input Fall Time	—	—	—	ns	See Parameter DO32 and **Note 4**
SP73	TscR	SCKx Input Rise Time	—	—	—	ns	See Parameter DO31 and **Note 4**
SP30	TdoF	SDOx Data Output Fall Time	—	—	—	ns	See Parameter DO32 and **Note 4**
SP31	TdoR	SDOx Data Output Rise Time	—	—	—	ns	See Parameter DO31 and **Note 4**
SP35	TscH2doV, TscL2doV	SDOx Data Output Valid after SCKx Edge	—	6	20	ns	
SP36	TdoV2scH, TdoV2scL	SDOx Data Output Setup to First SCKx Edge	30	—	—	ns	
SP40	TdiV2scH, TdiV2scL	Setup Time of SDIx Data Input to SCKx Edge	30	—	—	ns	
SP41	TscH2diL, TscL2diL	Hold Time of SDIx Data Input to SCKx Edge	30	—	—	ns	
SP50	TssL2scH, TssL2scL	$\overline{SSx}$ ↓ to SCKx ↑ or SCKx Input	120	—	—	ns	
SP51	TssH2doZ	$\overline{SSx}$ ↑ to SDOx Output High-Impedance	10	—	50	ns	See **Note 4**
SP52	TscH2ssH TscL2ssH	$\overline{SSx}$ after SCKx Edge	1.5 TCY + 40	—	—	ns	See **Note 4**
SP60	TssL2doV	SDOx Data Output Valid after $\overline{SSx}$ Edge	—	—	50	ns	

Note 1: These parameters are characterized, but are not tested in manufacturing.

2: Data in “Typ” column is at 3.3V, 25°C unless otherwise stated.

3: The minimum clock period for SCKx is 91 ns. Therefore, the SCKx clock generated by the master must not violate this specification.

4: Assumes 50 pF load on all SPIx pins.

© 2011-2012 Microchip Technology Inc.

FIGURE 25-17: SPIx SLAVE MODE (FULL-DUPLEX CKE = 0, CKP = 1, SMP = 0) TIMING CHARACTERISTICS

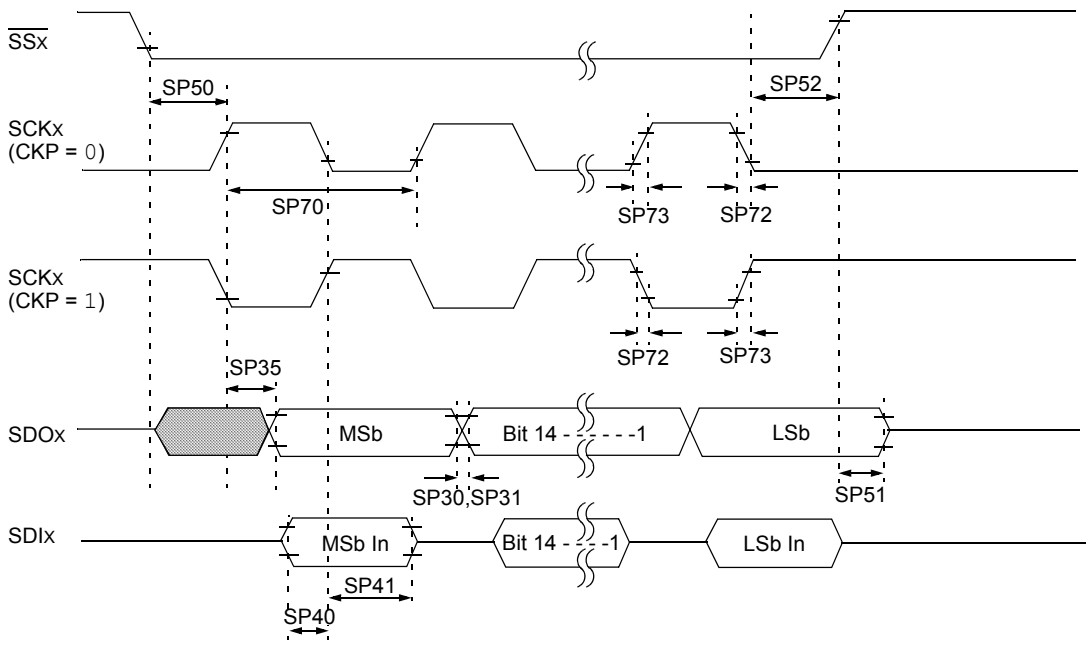

Note: Refer to Figure 25-1 for load conditions.

TABLE 25-35: SPIx SLAVE MODE (FULL-DUPLEX, CKE = 0, CKP = 1, SMP = 0) TIMING REQUIREMENTS

AC CHARACTERISTICS			Standard Operating Conditions: 3.0V to 3.6V (unless otherwise stated) Operating temperature -40°C ≤ TA ≤ +85°C for Industrial -40°C ≤ TA ≤ +125°C for Extended				
Param No.	**Symbol**	**Characteristic(1)**	**Min**	**Typ(2)**	**Max**	**Units**	**Conditions**
SP70	TscP	Maximum SCKx Input Frequency	—	—	15	MHz	See **Note 3**
SP72	TscF	SCKx Input Fall Time	—	—	—	ns	See Parameter DO32 and **Note 4**
SP73	TscR	SCKx Input Rise Time	—	—	—	ns	See Parameter DO31 and **Note 4**
SP30	TdoF	SDOx Data Output Fall Time	—	—	—	ns	See Parameter DO32 and **Note 4**
SP31	TdoR	SDOx Data Output Rise Time	—	—	—	ns	See Parameter DO31 and **Note 4**
SP35	TscH2doV, TscL2doV	SDOx Data Output Valid after SCKx Edge	—	6	20	ns	
SP36	TdoV2scH, TdoV2scL	SDOx Data Output Setup to First SCKx Edge	30	—	—	ns	
SP40	TdiV2scH, TdiV2scL	Setup Time of SDIx Data Input to SCKx Edge	30	—	—	ns	
SP41	TscH2diL, TscL2diL	Hold Time of SDIx Data Input to SCKx Edge	30	—	—	ns	
SP50	TssL2scH, TssL2scL	$\overline{SSx}$ ↓ to SCKx ↑ or SCKx Input	120	—	—	ns	
SP51	TssH2doZ	$\overline{SSx}$ ↑ to SDOx Output High-Impedance	10	—	50	ns	See **Note 4**
SP52	TscH2ssH TscL2ssH	$\overline{SSx}$ after SCKx Edge	1.5 TCY + 40	—	—	ns	See **Note 4**

Note 1: These parameters are characterized, but are not tested in manufacturing.

2: Data in “Typ” column is at 3.3V, 25°C unless otherwise stated.

3: The minimum clock period for SCKx is 66.7 ns. Therefore, the SCKx clock generated by the master must not violate this specification.

4: Assumes 50 pF load on all SPIx pins.

© 2011-2012 Microchip Technology Inc.

FIGURE 25-18: SPIx SLAVE MODE (FULL-DUPLEX, CKE = 0, CKP = 0, SMP = 0) TIMING CHARACTERISTICS

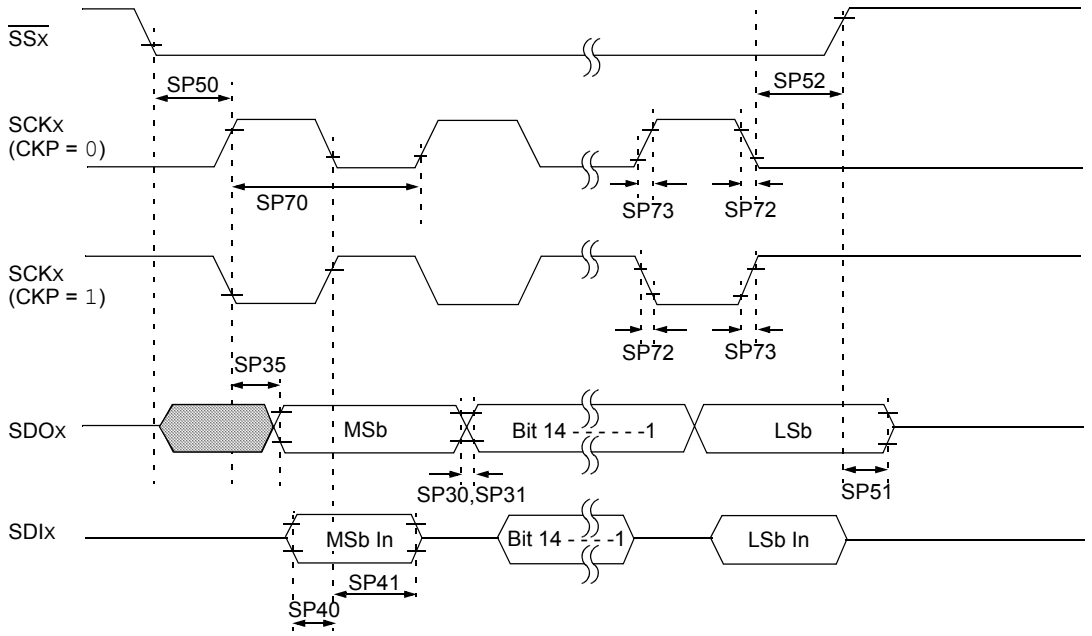

Note: Refer to Figure 25-1 for load conditions.

TABLE 25-36: SPIx SLAVE MODE (FULL-DUPLEX, CKE = 0, CKP = 0, SMP = 0) TIMING REQUIREMENTS

AC CHARACTERISTICS			Standard Operating Conditions: 3.0V to 3.6V (unless otherwise stated) Operating temperature -40°C ≤ TA ≤ +85°C for Industrial -40°C ≤ TA ≤ +125°C for Extended				
Param No.	**Symbol**	**Characteristic(1)**	**Min**	**Typ(2)**	**Max**	**Units**	**Conditions**
SP70	TscP	Maximum SCKx Input Frequency	—	—	11	MHz	See **Note 3**
SP72	TscF	SCKx Input Fall Time	—	—	—	ns	See Parameter DO32 and **Note 4**
SP73	TscR	SCKx Input Rise Time	—	—	—	ns	See Parameter DO31 and **Note 4**
SP30	TdoF	SDOx Data Output Fall Time	—	—	—	ns	See Parameter DO32 and **Note 4**
SP31	TdoR	SDOx Data Output Rise Time	—	—	—	ns	See Parameter DO31 and **Note 4**
SP35	TscH2doV, TscL2doV	SDOx Data Output Valid after SCKx Edge	—	6	20	ns	
SP36	TdoV2scH, TdoV2scL	SDOx Data Output Setup to First SCKx Edge	30	—	—	ns	
SP40	TdiV2scH, TdiV2scL	Setup Time of SDIx Data Input to SCKx Edge	30	—	—	ns	
SP41	TscH2diL, TscL2diL	Hold Time of SDIx Data Input to SCKx Edge	30	—	—	ns	
SP50	TssL2scH, TssL2scL	$\overline{SSx}$ ↓ to SCKx ↑ or SCKx Input	120	—	—	ns	
SP51	TssH2doZ	$\overline{SSx}$ ↑ to SDOx Output High-Impedance	10	—	50	ns	See **Note 4**
SP52	TscH2ssH TscL2ssH	$\overline{SSx}$ after SCKx Edge	1.5 TCY + 40	—	—	ns	See **Note 4**

Note 1: These parameters are characterized, but are not tested in manufacturing.

2: Data in “Typ” column is at 3.3V, 25°C unless otherwise stated.

3: The minimum clock period for SCKx is 91 ns. Therefore, the SCKx clock generated by the master must not violate this specification.

4: Assumes 50 pF load on all SPIx pins.

© 2011-2012 Microchip Technology Inc.

FIGURE 25-19: I2C1 BUS START/STOP BITS TIMING CHARACTERISTICS (MASTER MODE)

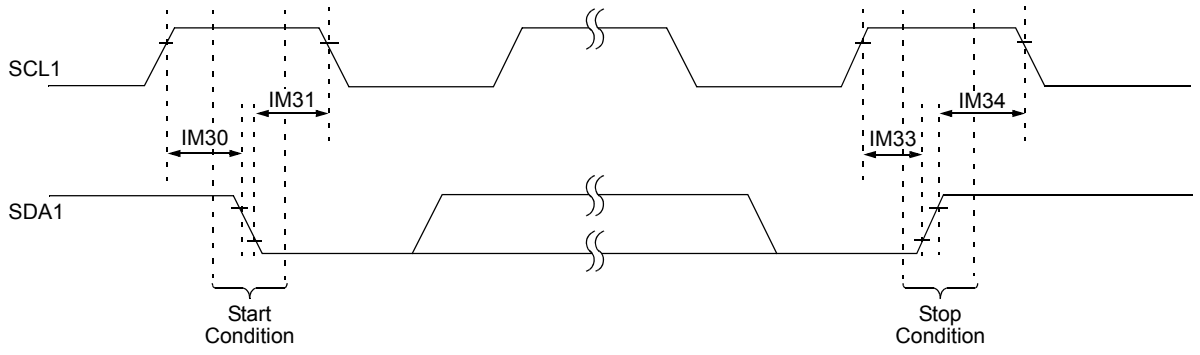

Note: Refer to Figure 25-1 for load conditions.

FIGURE 25-20: I2C1 BUS DATA TIMING CHARACTERISTICS (MASTER MODE)

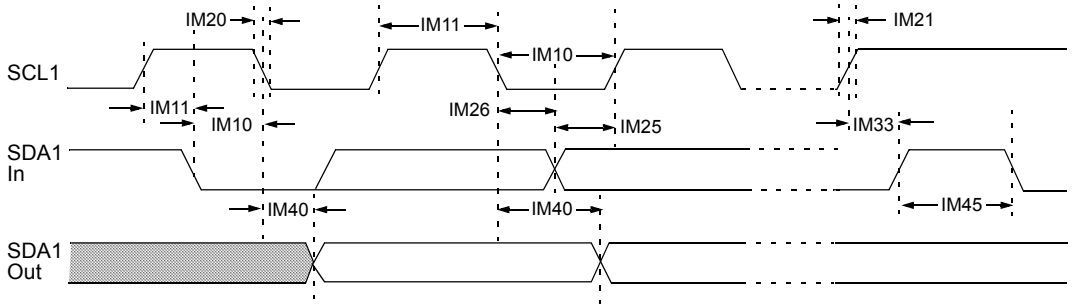

Note: Refer to Figure 25-1 for load conditions.

TABLE 25-37: I2C1 BUS DATA TIMING REQUIREMENTS (MASTER MODE)

AC CHARACTERISTICS				Standard Operating Conditions: 3.0V to 3.6V (unless otherwise stated) Operating temperature -40°C ≤ TA ≤ +85°C for Industrial -40°C ≤ TA ≤ +125°C for Extended			
Param.	**Symbol**	**Characteristic**		**Min.(1)**	**Max.**	**Units**	**Conditions**
IM10	TLO:SCL	Clock Low Time	100 kHz mode	TCY/2 (BRG + 1)	—	μs	
			400 kHz mode	TCY/2 (BRG + 1)	—	μs	
			1 MHz mode(2)	TCY/2 (BRG + 1)	—	μs	
IM11	THI:SCL	Clock High Time	100 kHz mode	TCY/2 (BRG + 1)	—	μs	
			400 kHz mode	TCY/2 (BRG + 1)	—	μs	
			1 MHz mode(2)	TCY/2 (BRG + 1)	—	μs	
IM20	TF:SCL	SDA1 and SCL1 Fall Time	100 kHz mode	—	300	ns	CB is specified to be from 10 pF to 400 pF
			400 kHz mode	20 + 0.1 CB	300	ns	
			1 MHz mode(2)	—	100	ns	
IM21	TR:SCL	SDA1 and SCL1 Rise Time	100 kHz mode	—	1000	ns	CB is specified to be from 10 pF to 400 pF
			400 kHz mode	20 + 0.1 CB	300	ns	
			1 MHz mode(2)	—	300	ns	
IM25	TSU:DAT	Data Input Setup Time	100 kHz mode	250	—	ns	
			400 kHz mode	100	—	ns	
			1 MHz mode(2)	40	—	ns	
IM26	THD:DAT	Data Input Hold Time	100 kHz mode	0	—	μs	
			400 kHz mode	0	0.9	μs	
			1 MHz mode(2)	0.2	—	μs	
IM30	TSU:STA	Start Condition Setup Time	100 kHz mode	TCY/2 (BRG + 1)	—	μs	Only relevant for Repeated Start condition
			400 kHz mode	TCY/2 (BRG + 1)	—	μs	
			1 MHz mode(2)	TCY/2 (BRG + 1)	—	μs	
IM31	THD:STA	Start Condition Hold Time	100 kHz mode	TCY/2 (BRG + 1)	—	μs	After this period the first clock pulse is generated
			400 kHz mode	TCY/2 (BRG + 1)	—	μs	
			1 MHz mode(2)	TCY/2 (BRG + 1)	—	μs	
IM33	TSU:STO	Stop Condition Setup Time	100 kHz mode	TCY/2 (BRG + 1)	—	μs	
			400 kHz mode	TCY/2 (BRG + 1)	—	μs	
			1 MHz mode(2)	TCY/2 (BRG + 1)	—	μs	
IM34	THD:STO	Stop Condition Hold Time	100 kHz mode	TCY/2 (BRG + 1)	—	ns	
			400 kHz mode	TCY/2 (BRG + 1)	—	ns	
			1 MHz mode(2)	TCY/2 (BRG + 1)	—	ns	
IM40	TAA:SCL	Output Valid From Clock	100 kHz mode	—	3500	ns	
			400 kHz mode	—	1000	ns	
			1 MHz mode(2)	—	400	ns	
IM45	TBF:SDA	Bus Free Time	100 kHz mode	4.7	—	μs	Time the bus must be free before a new transmission can start
			400 kHz mode	1.3	—	μs	
			1 MHz mode(2)	0.5	—	μs	
IM50	CB	Bus Capacitive Loading		—	400	pF	
IM51	TPGD	Pulse Gobbler Delay		65	390	ns	See **Note 3**

Note 1: BRG is the value of the I²C™ Baud Rate Generator. Refer to **Section 19. "Inter-Integrated Circuit (I²C™)"** (DS70195) in the "*dsPIC33F/PIC24H Family Reference Manual*".

2: Maximum pin capacitance = 10 pF for all I2C1 pins (for 1 MHz mode only).

3: Typical value for this parameter is 130 ns.

© 2011-2012 Microchip Technology Inc.

FIGURE 25-21: I2C1 BUS START/STOP BITS TIMING CHARACTERISTICS (SLAVE MODE)

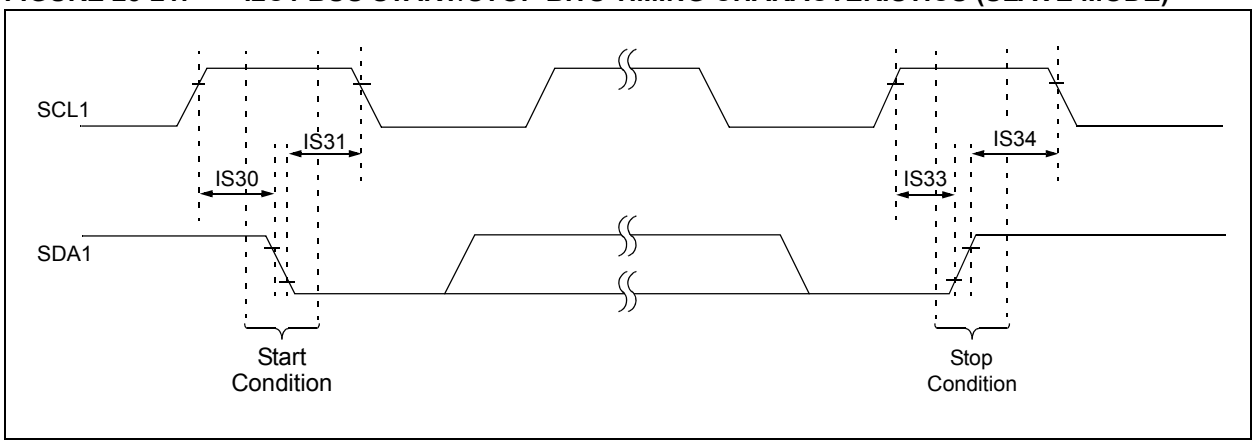

FIGURE 25-22: I2C1 BUS DATA TIMING CHARACTERISTICS (SLAVE MODE)

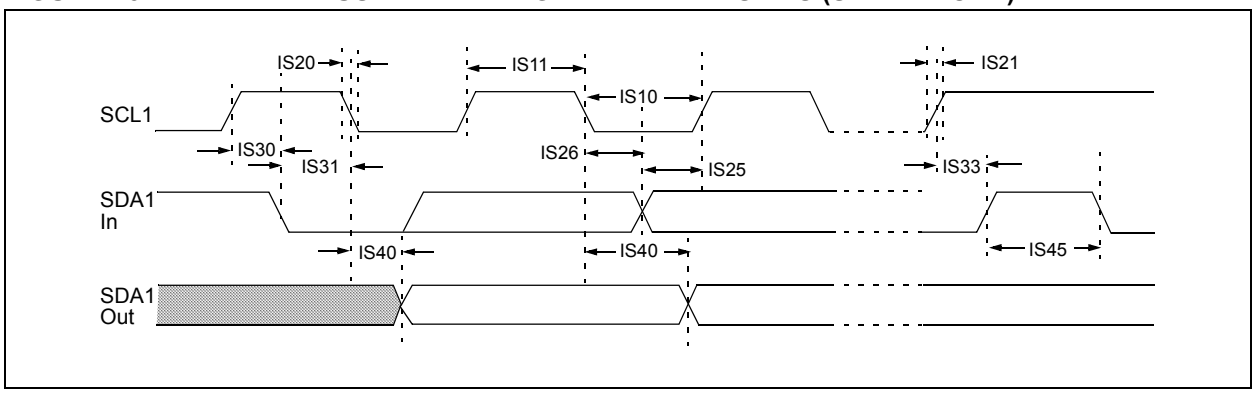

TABLE 25-38: I2C1 BUS DATA TIMING REQUIREMENTS (SLAVE MODE)

AC CHARACTERISTICS				Standard Operating Conditions: 3.0V to 3.6V (unless otherwise stated) Operating temperature -40°C ≤ TA ≤ +85°C for Industrial -40°C ≤ TA ≤ +125°C for Extended			
Param.	**Symbol**	**Characteristic**		**Min.**	**Max.**	**Units**	**Conditions**
IS10	TLO:SCL	Clock Low Time	100 kHz mode	4.7	—	μs	Device must operate at a minimum of 1.5 MHz
			400 kHz mode	1.3	—	μs	Device must operate at a minimum of 10 MHz
			1 MHz mode(1)	0.5	—	μs	
IS11	THI:SCL	Clock High Time	100 kHz mode	4.0	—	μs	Device must operate at a minimum of 1.5 MHz
			400 kHz mode	0.6	—	μs	Device must operate at a minimum of 10 MHz
			1 MHz mode(2)	0.5	—	μs	
IS20	TF:SCL	SDA1 and SCL1 Fall Time	100 kHz mode	—	300	ns	CB is specified to be from 10 pF to 400 pF
			400 kHz mode	20 + 0.1 CB	300	ns	
			1 MHz mode(2)	—	100	ns	
IS21	TR:SCL	SDA1 and SCL1 Rise Time	100 kHz mode	—	1000	ns	CB is specified to be from 10 pF to 400 pF
			400 kHz mode	20 + 0.1 CB	300	ns	
			1 MHz mode(2)	—	300	ns	
IS25	TSU:DAT	Data Input Setup Time	100 kHz mode	250	—	ns	
			400 kHz mode	100	—	ns	
			1 MHz mode(2)	100	—	ns	
IS26	THD:DAT	Data Input Hold Time	100 kHz mode	0	—	μs	
			400 kHz mode	0	0.9	μs	
			1 MHz mode(2)	0	0.3	μs	
IS30	TSU:STA	Start Condition Setup Time	100 kHz mode	4.7	—	μs	Only relevant for Repeated Start condition
			400 kHz mode	0.6	—	μs	
			1 MHz mode(2)	0.25	—	μs	
IS31	THD:STA	Start Condition Hold Time	100 kHz mode	4.0	—	μs	After this period, the first clock pulse is generated
			400 kHz mode	0.6	—	μs	
			1 MHz mode(2)	0.25	—	μs	
IS33	TSU:STO	Stop Condition Setup Time	100 kHz mode	4.7	—	μs	
			400 kHz mode	0.6	—	μs	
			1 MHz mode(2)	0.6	—	μs	
IS34	THD:STO	Stop Condition Hold Time	100 kHz mode	4000	—	ns	
			400 kHz mode	600	—	ns	
			1 MHz mode(2)	250		ns	
IS40	TAA:SCL	Output Valid From Clock	100 kHz mode	0	3500	ns	
			400 kHz mode	0	1000	ns	
			1 MHz mode(2)	0	350	ns	
IS45	TBF:SDA	Bus Free Time	100 kHz mode	4.7	—	μs	Time the bus must be free before a new transmission can start
			400 kHz mode	1.3	—	μs	
			1 MHz mode(2)	0.5	—	μs	
IS50	CB	Bus Capacitive Loading		—	400	pF	

Note 1: Maximum pin capacitance = 10 pF for all I2C1 pins (for 1 MHz mode only).

© 2011-2012 Microchip Technology Inc.

TABLE 25-39: 10-BIT HIGH-SPEED ADC MODULE SPECIFICATIONS

AC CHARACTERISTICS[2]			Standard Operating Conditions: 3.0V and 3.6V (unless otherwise stated) Operating temperature -40°C ≤ TA ≤ +85°C for Industrial -40°C ≤ TA ≤ +125°C for Extended				
Param.	**Symbol**	**Characteristic**	**Min.**	**Typ.**	**Max.**	**Units**	**Conditions**
Device Supply							
AD01	AVDD	Module VDD Supply	—	—	—	—	AVDD is internally connected to VDD on 18-pin and 28-pin devices. See parameters (DC10) in Table 25-4.
AD02	AVSS	Module VSS Supply	—	—	—	—	AVSS is internally connected to VSS on 18-pin and 28-pin devices
Analog Input							
AD10	VINH-VINL	Full-Scale Input Span	VSS	—	VDD	V	
AD11	VIN	Absolute Input Voltage	AVSS	—	AVDD	V	
AD12	IAD	Operating Current	—	8	—	mA	
AD13	—	Leakage Current	—	±0.6	—	μA	VINL = AVSS = 0V, AVDD = 3.3V, Source Impedance = 100Ω
AD17	RIN	Recommended Impedance of Analog Voltage Source	—	—	100	Ω	
DC Accuracy @ 1.5 Msps for 18 and 28-Pin Devices							
AD20a	Nr	Resolution	10 data bits				
AD21a	INL	Integral Nonlinearity	-0.5	-0.3/+0.5	+1.2	LSb	See **Note 3**
AD22a	DNL	Differential Nonlinearity	-0.9	±0.6	+0.9	LSb	See **Note 3**
AD23a	GERR	Gain Error	—	10	20	LSb	See **Note 3**
AD24a	EOFF	Offset Error	—	10	20	LSb	See **Note 3**
AD25a	—	Monotonicity[1]	—	—	—	—	Guaranteed
DC Accuracy @ 2.0 Msps for 18 and 28-Pin Devices							
AD20b	Nr	Resolution	10 data bits				
AD21b	INL	Integral Nonlinearity	-1	±1.5	+2.8	LSb	
AD22b	DNL	Differential Nonlinearity	-1.5	±2	+2.8	LSb	
AD23b	GERR	Gain Error	—	10	20	LSb	
AD24b	EOFF	Offset Error	—	10	20	LSb	
AD25b	—	Monotonicity[1]	—	—	—	—	Guaranteed
DC Accuracy @ 2.0 Msps for 20 and 36-Pin Devices							
AD20c	Nr	Resolution	10 data bits				
AD21c	INL	Integral Nonlinearity	> -2	±0.5	< 2	LSb	See **Note 3**
AD22c	DNL	Differential Nonlinearity	> -1	±0.5	< 1	LSb	See **Note 3**
AD23c	GERR	Gain Error	—	10	20	LSb	See **Note 3**
AD24c	EOFF	Offset Error	—	10	20	LSb	See **Note 3**
AD25c	—	Monotonicity[1]	—	—	—	—	Guaranteed

Note 1: The Analog-to-Digital conversion result never decreases with an increase in input voltage and has no missing codes.

2: Overall functional device operation at VBORMIN < VDD < VDDMIN is tested but not characterized. All device analog modules, such as the ADC, etc., will function, but with degraded performance below VDDMIN. Refer to Parameter BO10 in Table 25-11 for BOR values.

3: These parameters are characterized by similarity, but are not tested in manufacturing.

TABLE 25-39: 10-BIT HIGH-SPEED ADC MODULE SPECIFICATIONS (CONTINUED)

AC CHARACTERISTICS[2]			Standard Operating Conditions: 3.0V and 3.6V (unless otherwise stated) Operating temperature -40°C ≤ TA ≤ +85°C for Industrial -40°C ≤ TA ≤ +125°C for Extended				
Param.	**Symbol**	**Characteristic**	**Min.**	**Typ.**	**Max.**	**Units**	**Conditions**
Dynamic Performance							
AD30	THD	Total Harmonic Distortion	—	-73	—	dB	
AD31	SINAD	Signal to Noise and Distortion	—	58	—	dB	
AD32	SFDR	Spurious Free Dynamic Range	—	-73	—	dB	
AD33	FNYQ	Input Signal Bandwidth	—	—	1	MHz	
AD34	ENOB	Effective Number of Bits	—	9.4	—	bits	

Note 1: The Analog-to-Digital conversion result never decreases with an increase in input voltage and has no missing codes.

2: Overall functional device operation at VBORMIN < VDD < VDDMIN is tested but not characterized. All device analog modules, such as the ADC, etc., will function, but with degraded performance below VDDMIN. Refer to Parameter BO10 in Table 25-11 for BOR values.

3: These parameters are characterized by similarity, but are not tested in manufacturing.

TABLE 25-40: 10-BIT HIGH-SPEED ADC MODULE TIMING REQUIREMENTS

AC CHARACTERISTICS			Standard Operating Conditions: 3.0V to 3.6V (unless otherwise stated) Operating temperature -40°C ≤ TA ≤ +85°C for Industrial -40°C ≤ TA ≤ +125°C for Extended				
Param.	**Symbol**	**Characteristic**	**Min.**	**Typ.[1]**	**Max.**	**Units**	**Conditions**
Clock Parameters							
AD50b	TAD	ADC Clock Period	35.8	—	—	ns	
Conversion Rate							
AD55b	tCONV	Conversion Time	—	14 TAD	—	—	
AD56b	FCNV	Throughput Rate					
		Devices with Single SAR	—	—	2.0	Msps	
Timing Parameters							
AD63b	tDPU	Time to Stabilize Analog Stage from ADC Off to ADC On	1.0	—	10	µs	

Note 1: These parameters are characterized but not tested in manufacturing.

FIGURE 25-23: ANALOG-TO-DIGITAL CONVERSION TIMING PER INPUT

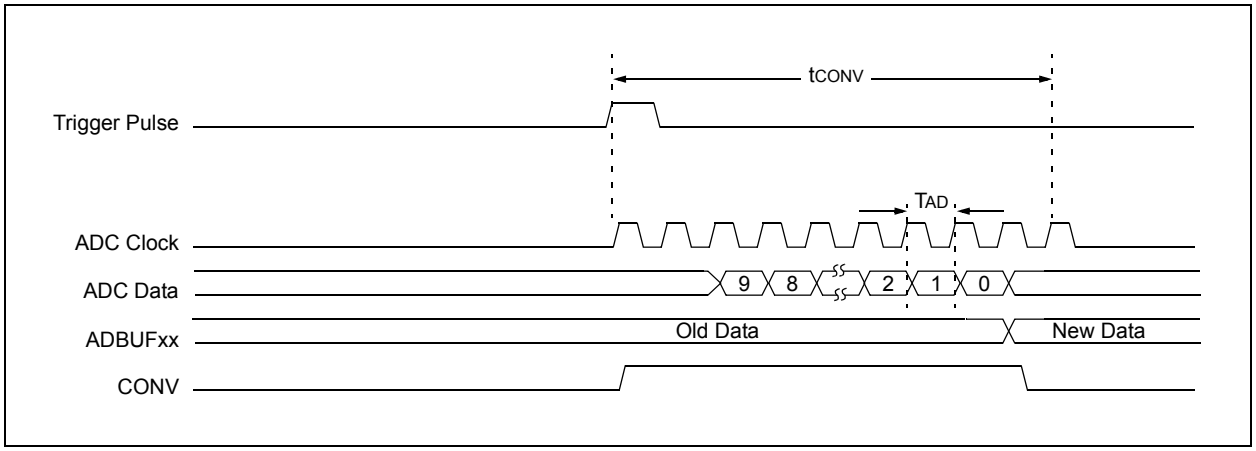

© 2011-2012 Microchip Technology Inc.

TABLE 25-41: HIGH-SPEED ANALOG COMPARATOR MODULE SPECIFICATIONS

DC CHARACTERISTICS[2]			Standard Operating Conditions (unless otherwise stated) Operating temperature: -40°C ≤ TA ≤ +85°C for Industrial -40°C ≤ TA ≤ +125°C for Extended				
Param.	**Symbol**	**Characteristic**	**Min.**	**Typ.**	**Max.**	**Units**	**Comments**
CM10	VIOFF	Input Offset Voltage	-58	+14/-40	66	mV	
CM11	VICM	Input Common-Mode Voltage Range[1]	0	—	AVDD	V	
CM14	TRESP	Large Signal Response	21	30	49	ns	V+ input step of 100 mv while V- input held at AVDD/2. Delay measured from analog input pin to PWM output pin.

Note 1: These parameters are for design guidance only and are not tested in manufacturing.

2: Overall functional device operation at VBORMIN < VDD < VDDMIN is tested, but not characterized. All device analog modules, such as the ADC, etc., will function but with degraded performance below VDDMIN. Refer to Parameter BO10 in Table 25-11 for BOR values.

TABLE 25-42: DAC MODULE SPECIFICATIONS

AC and DC CHARACTERISTICS[2]			Standard Operating Conditions (unless otherwise stated) Operating temperature: -40°C ≤ TA ≤ +85°C for Industrial -40°C ≤ TA ≤ +125°C for Extended				
Param.	**Symbol**	**Characteristic**	**Min.**	**Typ.**	**Max.**	**Units**	**Comments**
DA01	EXTREF	External Voltage Reference[1]	0	—	AVDD – 1.6	V	
DA08	INTREF	Internal Voltage Reference[1]	1.15	1.25	1.35	V	
DA02	CVRES	Resolution	10			Bits	
DA03	INL	Integral Nonlinearity Error	-7	-1	+7	LSB	AVDD = 3.3V, DACREF = (AVDD/2)V
DA04	DNL	Differential Nonlinearity Error	-5	-0.5	+5	LSB	
DA05	EOFF	Offset Error	0.4	-0.8	2.6	%	
DA06	EG	Gain Error	0.4	-1.8	5.2	%	
DA07	TSET	Settling Time[1]	711	1551	2100	ns	Measured when RANGE = 1 (high range) and the CMREF<9:0> bits transition from 0x1FF to 0x300

Note 1: Parameters are for design guidance only and are not tested in manufacturing.

2: Overall functional device operation at VBORMIN < VDD < VDDMIN is tested but not characterized. All device analog modules such as the ADC, etc., will function but with degraded performance below VDDMIN. Refer to Parameter BO10 in Table 25-11 for BOR values.

TABLE 25-43: DAC OUTPUT (DACOUT PIN) DC SPECIFICATIONS

DC CHARACTERISTICS[1]			Standard Operating Conditions (unless otherwise stated) Operating temperature: -40°C ≤ TA ≤ +85°C for Industrial -40°C ≤ TA ≤ +125°C for Extended				
Param.	**Symbol**	**Characteristic**	**Min.**	**Typ.**	**Max.**	**Units**	**Comments**
DA11	RLOAD	Resistive Output Load Impedance	3K	—	—	Ohm	
—	CLOAD	Output Load Capacitance	—	—	35	pF	Including output pin capacitance
DA12	IOUT	Output Current Drive Strength	200	300	—	µA	Sink and source
DA13	VRANGE	Output Drive Voltage Range at Current Drive of 200 mA	AVSS + 250 mV	—	AVDD – 900 mV	V	
DA14	VLRANGE	Output Drive Voltage Range at Reduced Current Drive of 50 mA	AVSS + 5 mV	—	AVDD – 500 mV	V	
DA15	IDD	Current Consumed when Module Is Enabled	—	—	1.3 x IOUT	µA	Module will always consume this current even if no load is connected to the output
DA16	ROUTON	Output Impedance when Module is Enabled	—	820	—	Ohms	
DA30	VOFFSET	Input Offset Voltage	—	±10	10	mV	

Note 1: Overall functional device operation at VBORMIN < VDD < VDDMIN is tested but not characterized. All device analog modules, such as the ADC, etc., will function but with degraded performance below VDDMIN. Refer to Parameter BO10 in Table 25-11 for BOR values.

TABLE 25-44: DAC GAIN STAGE TO COMPARATOR SPECIFICATIONS

DC CHARACTERISTICS[1]			Standard Operating Conditions (unless otherwise stated) Operating temperature: -40°C ≤ TA ≤ +85°C for Industrial -40°C ≤ TA ≤ +125°C for Extended				
Param.	**Symbol**	**Characteristic**	**Min.**	**Typ.**	**Max.**	**Units**	**Conditions**
DA15	IDD	Current Consumed when Module Is Enabled.	—	60	—	µA	Module will always consume this current even if no load is connected to the output
DA32	G	Amplifier Gain	—	1.0	—	—	
			—	1.8	—	—	
DA33	GBWP	Gain Bandwidth Product	—	2.0	—	MHz	At 1 pF load capacitance. Measured with sine wave output signal of 1V peak-to-peak with a midpoint value of 1.2V. Voltage excursion from 0.7 to 1.7V.
DA34	SR	Slew Rate	—	5	—	V/µs	Slew rate between 10% and 90% of AVDD
DA07	TS	Settling Time	—	200	—	ns	Settling time to 3%

Note 1: Overall functional device operation at VBORMIN < VDD < VDDMIN is tested but not characterized. All device analog modules, such as the ADC, etc., will function but with degraded performance below VDDMIN. Refer to Parameter BO10 in Table 25-11 for BOR values.

© 2011-2012 Microchip Technology Inc.

TABLE 25-45: CONSTANT CURRENT SOURCE SPECIFICATIONS

DC CHARACTERISTICS[1]				Standard Operating Conditions (unless otherwise stated) Operating temperature: -40°C ≤ TA ≤ +85°C for Industrial -40°C ≤ TA ≤ +125°C for Extended			
Param.	**Symbol**	**Characteristic**	**Min.**	**Typ.**	**Max.**	**Units**	**Conditions**
CC01	IDD	Current Consumption	—	30	—	μA	
CC02	IREG	Regulation of Current with Voltage On	—	±3	—	%	
CC03	IOUT	Current Output at Terminal	—	10	—	μA	

Note 1: Overall functional device operation at VBORMIN < VDD < VDDMIN is tested but not characterized. All device analog modules such as the ADC, etc., will function but with degraded performance below VDDMIN. Refer to Parameter BO10 in Table 25-11 for BOR values.

NOTES:

© 2011-2012 Microchip Technology Inc.

26.0 DC AND AC DEVICE CHARACTERISTICS GRAPHS

Note: The graphs provided following this note are a statistical summary based on a limited number of samples and are provided for design guidance purposes only. The performance characteristics listed herein are not tested or guaranteed. In some graphs, the data presented may be outside the specified operating range (e.g., outside specified power supply range) and therefore, outside the warranted range.

FIGURE 26-1: VOH – 4x DRIVER PINS

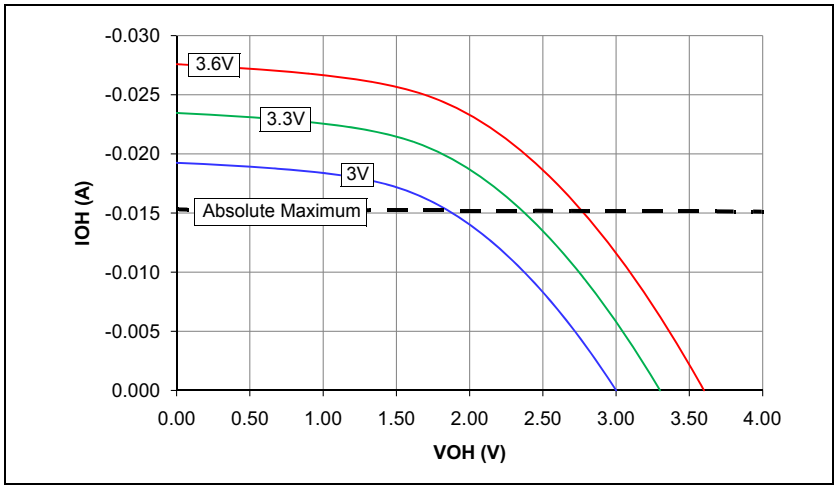

FIGURE 26-2: VOH – 16x DRIVER PINS

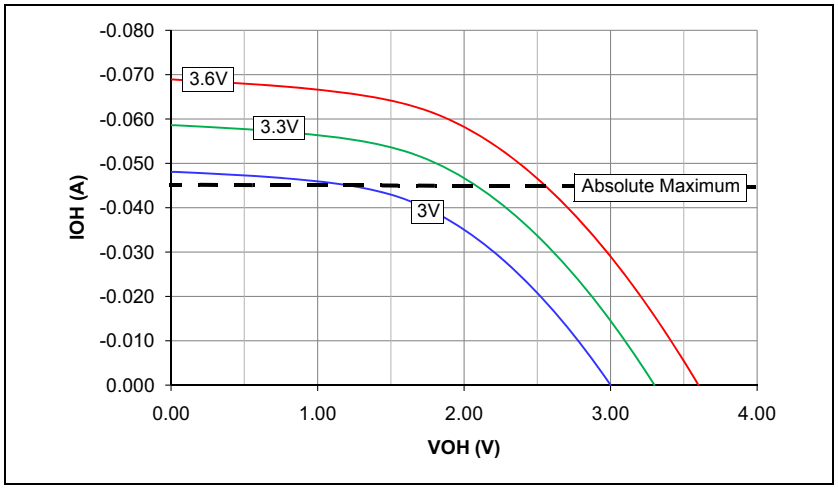

FIGURE 26-3: VOL – 4x DRIVER PINS

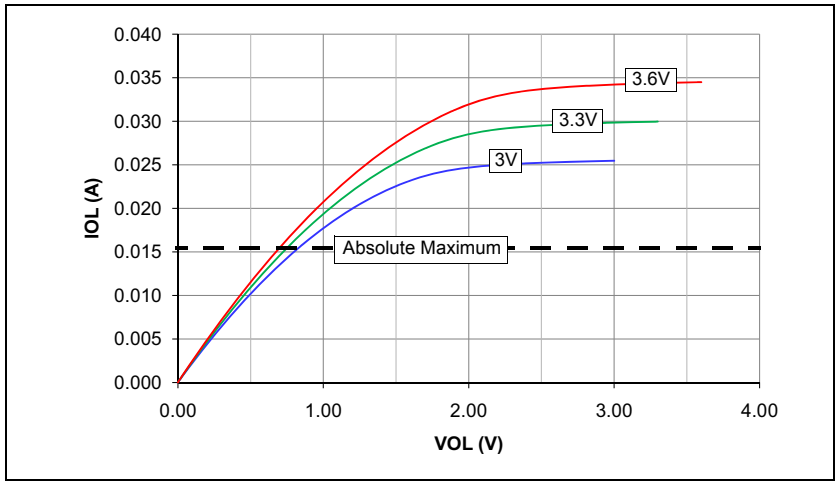

FIGURE 26-4: VOL – 16x DRIVER PINS

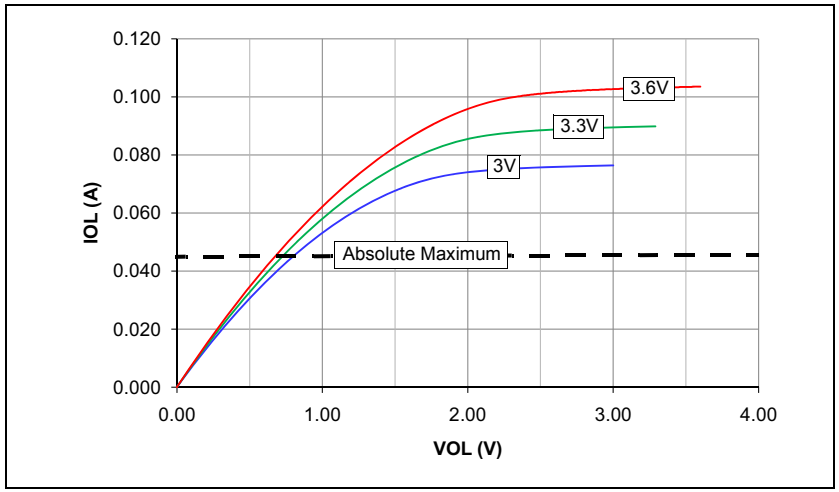

© 2011-2012 Microchip Technology Inc.

FIGURE 26-5: TYPICAL IPD CURRENT @ VDD = 3.3V

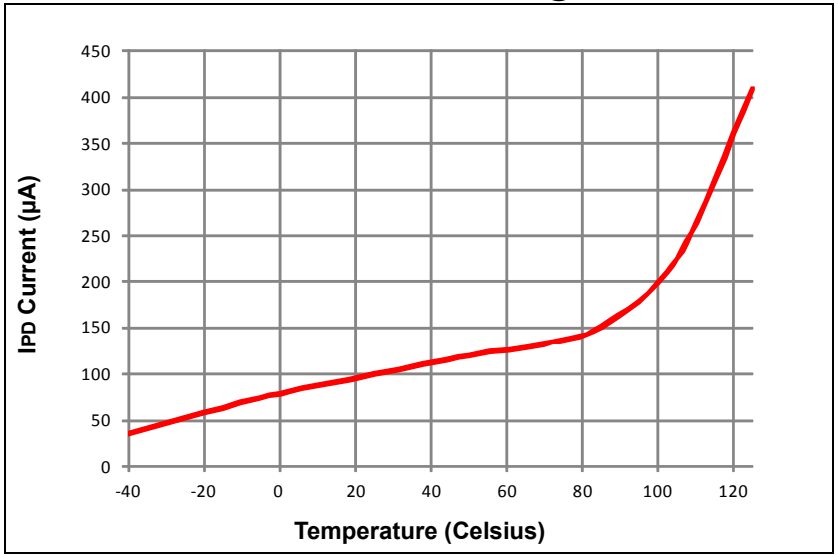

FIGURE 26-6: TYPICAL IDOZE CURRENT @ VDD = 3.3V

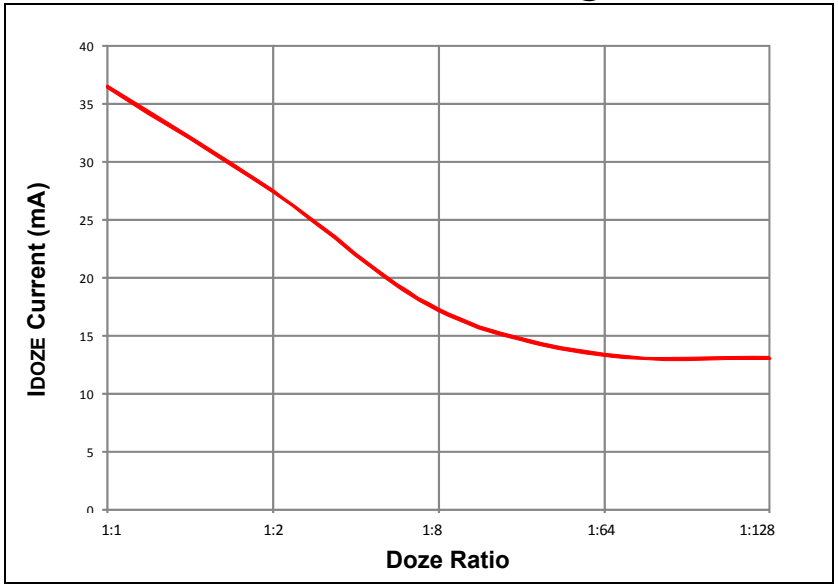

FIGURE 26-7: TYPICAL IDD CURRENT @ VDD = 3.3V, +25ºC

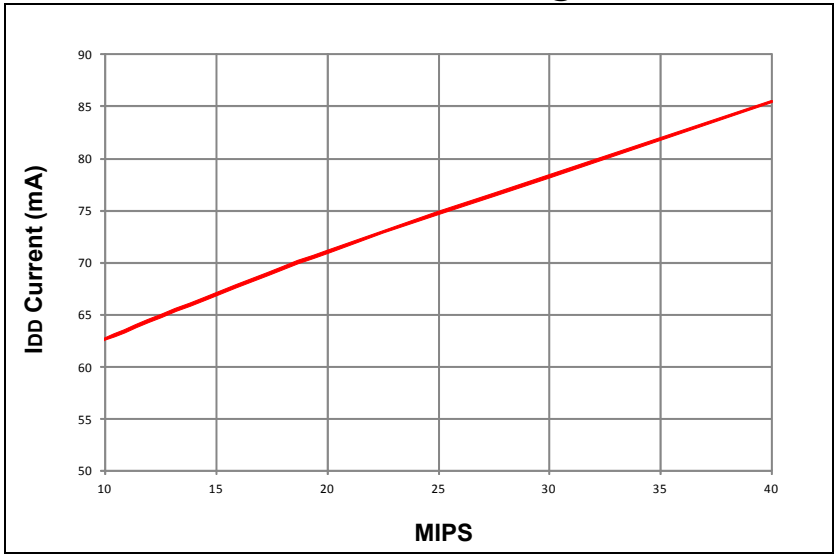

FIGURE 26-8: TYPICAL IIDLE CURRENT @ VDD = 3.3V, +25ºC

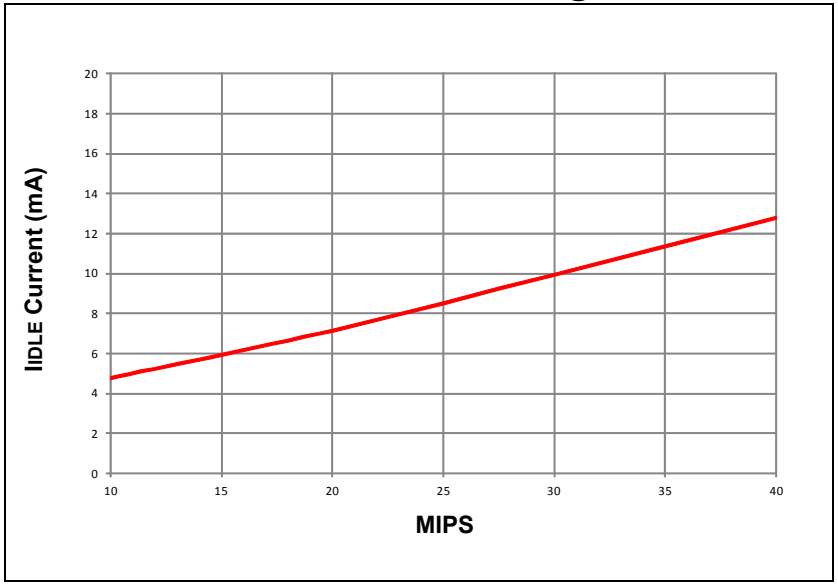

© 2011-2012 Microchip Technology Inc.

FIGURE 26-9: TYPICAL FRC FREQUENCY @ VDD = 3.3V

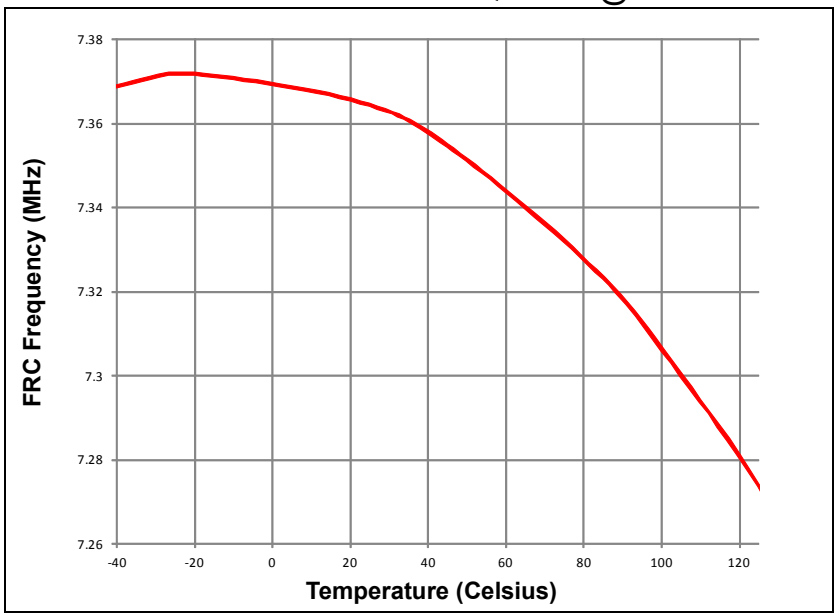

FIGURE 26-10: TYPICAL INTREF @ VDD = 3.3V

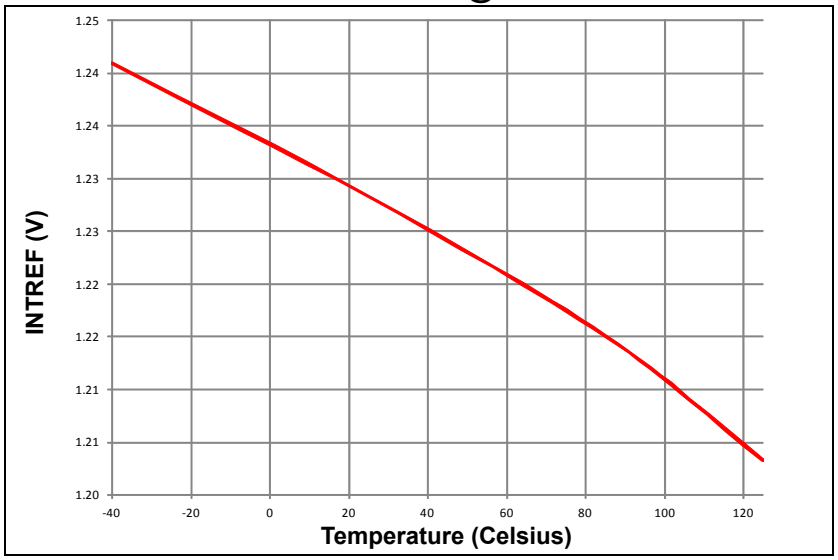

FIGURE 26-11: TYPICAL LPRC FREQUENCY @ VDD = 3.3V

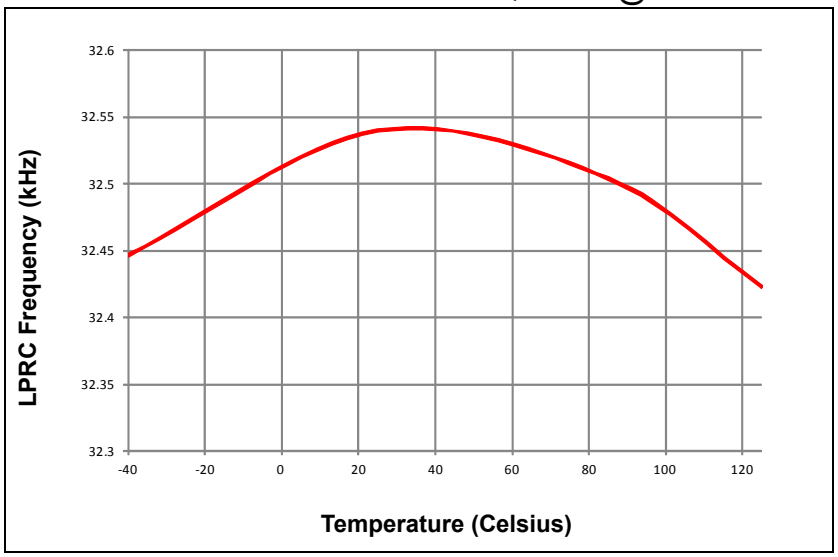

© 2011-2012 Microchip Technology Inc.

NOTES:

© 2011-2012 Microchip Technology Inc.

27.0 PACKAGING INFORMATION

27.1 Package Marking Information

18-Lead PDIP

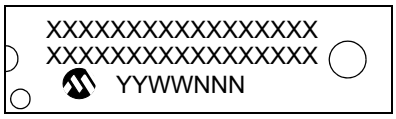

Example

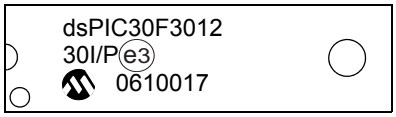

18-Lead SOIC (.300”)

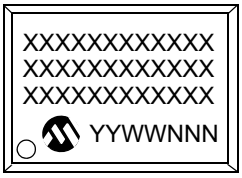

Example

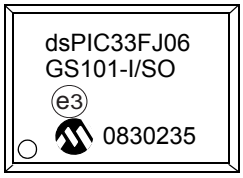

20-Lead SSOP

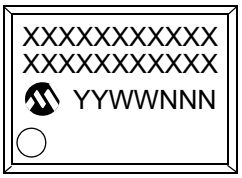

Example

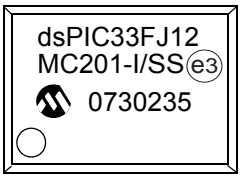

Legend:	XX...X	Customer-specific information
	Y	Year code (last digit of calendar year)
	YY	Year code (last 2 digits of calendar year)
	WW	Week code (week of January 1 is week ‘01’)
	NNN	Alphanumeric traceability code
	e3	Pb-free JEDEC designator for Matte Tin (Sn)
	*	This package is Pb-free. The Pb-free JEDEC designator (e3) can be found on the outer packaging for this package.
Note:	If the full Microchip part number cannot be marked on one line, it is carried over to the next line, thus limiting the number of available characters for customer-specific information.	

27.1 Package Marking Information (Continued)

28-Lead SPDIP

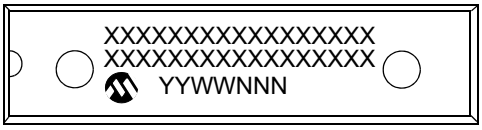

Example

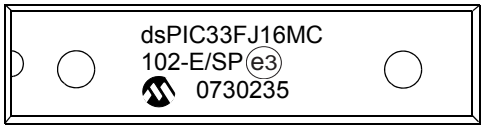

28-Lead SOIC

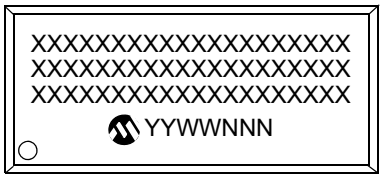

Example

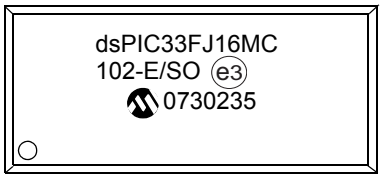

28-Lead SSOP

Example

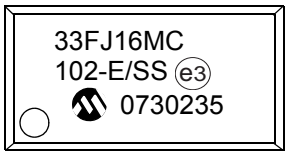

28-Lead QFN-S

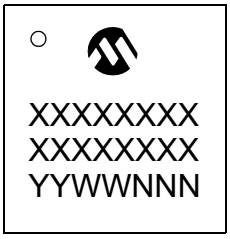

Example

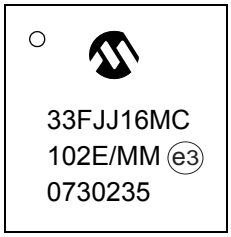

36-Lead VTLA

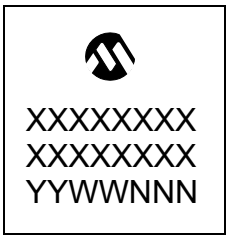

Example

© 2011-2012 Microchip Technology Inc.

27.2 Package Details

18-Lead Plastic Dual In-Line (P) – 300 mil Body [PDIP]

Note: For the most current package drawings, please see the Microchip Packaging Specification located at http://www.microchip.com/packaging

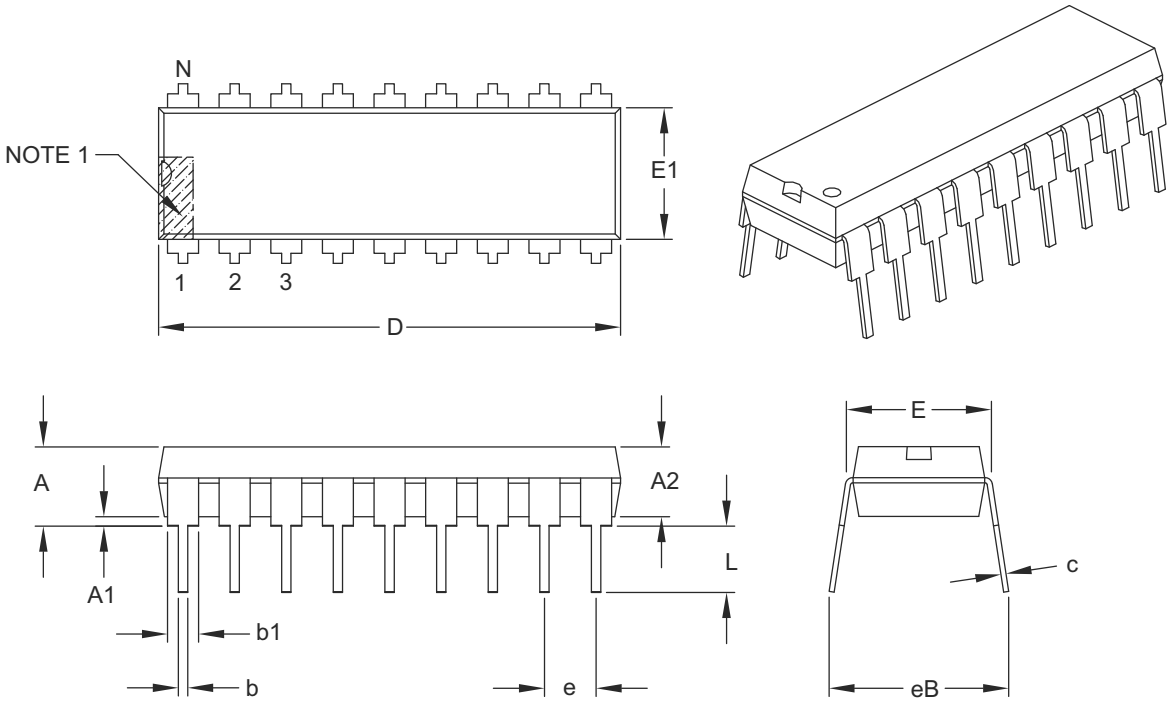

Units		INCHES		
Dimension Limits		MIN	NOM	MAX
Number of Pins	N	18		
Pitch	e	.100 BSC		
Top to Seating Plane	A	–	–	.210
Molded Package Thickness	A2	.115	.130	.195
Base to Seating Plane	A1	.015	–	–
Shoulder to Shoulder Width	E	.300	.310	.325
Molded Package Width	E1	.240	.250	.280
Overall Length	D	.880	.900	.920
Tip to Seating Plane	L	.115	.130	.150
Lead Thickness	c	.008	.010	.014
Upper Lead Width	b1	.045	.060	.070
Lower Lead Width	b	.014	.018	.022
Overall Row Spacing §	eB	–	–	.430

Notes:
1. Pin 1 visual index feature may vary, but must be located within the hatched area.
2. § Significant Characteristic.
3. Dimensions D and E1 do not include mold flash or protrusions. Mold flash or protrusions shall not exceed .010" per side.
4. Dimensioning and tolerancing per ASME Y14.5M.
   BSC: Basic Dimension. Theoretically exact value shown without tolerances.

Microchip Technology Drawing C04-007B

18-Lead Plastic Small Outline (SO) - Wide, 7.50 mm Body [SOIC]

Note: For the most current package drawings, please see the Microchip Packaging Specification located at http://www.microchip.com/packaging

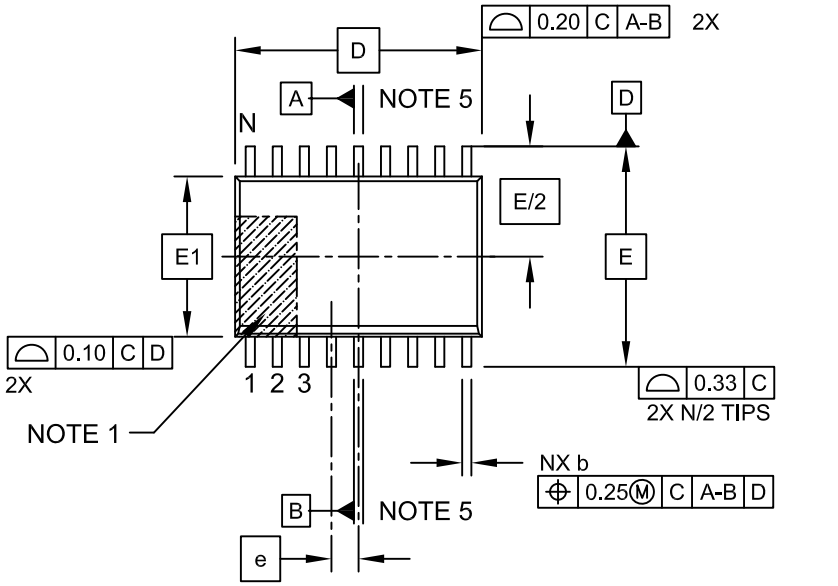

TOP VIEW

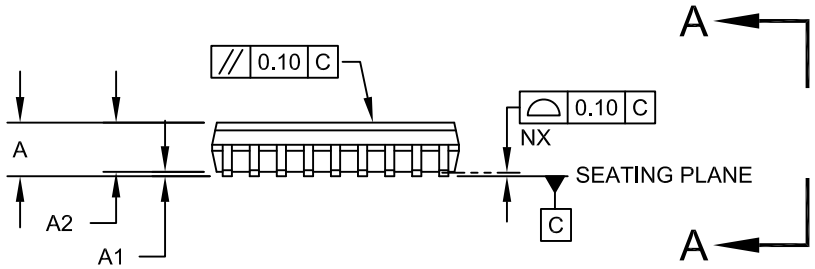

SIDE VIEW

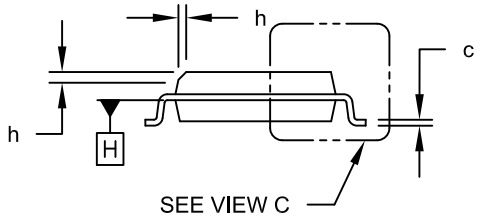

VIEW A-A

Microchip Technology Drawing C04-051C Sheet 1 of 2

© 2011-2012 Microchip Technology Inc.

18-Lead Plastic Small Outline (SO) - Wide, 7.50 mm Body [SOIC]

Note: For the most current package drawings, please see the Microchip Packaging Specification located at http://www.microchip.com/packaging

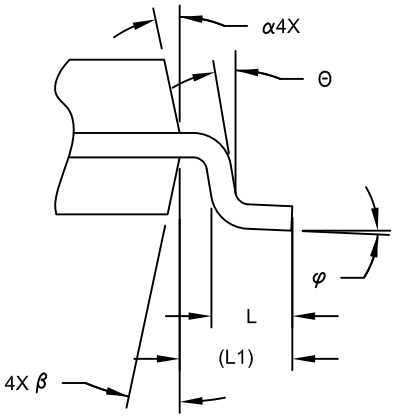

VIEW C

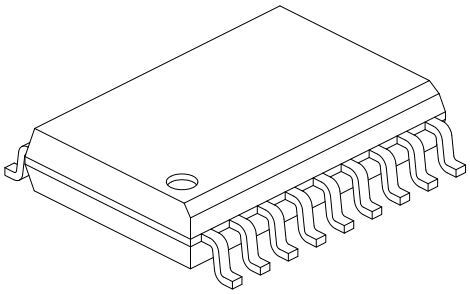

Units		MILLIMETERS		
Dimension Limits		MIN	NOM	MAX
Number of Pins	N	18		
Pitch	e	1.27 BSC		
Overall Height	A	-	-	2.65
Molded Package Thickness	A2	2.05	-	-
Standoff §	A1	0.10	-	0.30
Overall Width	E	10.30 BSC		
Molded Package Width	E1	7.50 BSC		
Overall Length	D	11.55 BSC		
Chamfer (Optional)	h	0.25	-	0.75
Foot Length	L	0.40	-	1.27
Footprint	L1	1.40 REF		
Lead Angle	Θ	0°	-	-
Foot Angle	φ	0°	-	8°
Lead Thickness	c	0.20	-	0.33
Lead Width	b	0.31	-	0.51
Mold Draft Angle Top	α	5°	-	15°
Mold Draft Angle Bottom	β	5°	-	15°

Notes:

1. Pin 1 visual index feature may vary, but must be located within the hatched area.
2. § Significant Characteristic
3. Dimension D does not include mold flash, protrusions or gate burrs, which shall not exceed 0.15 mm per end. Dimension E1 does not include interlead flash or protrusion, which shall not exceed 0.25 mm per side.
4. Dimensioning and tolerancing per ASME Y14.5M
   BSC: Basic Dimension. Theoretically exact value shown without tolerances.
   REF: Reference Dimension, usually without tolerance, for information purposes only.
5. Datums A & B to be determined at Datum H.

Microchip Technology Drawing No. C04-051C Sheet 2 of 2

18-Lead Plastic Small Outline (SO) - Wide, 7.50 mm Body [SOIC]

Note: For the most current package drawings, please see the Microchip Packaging Specification located at http://www.microchip.com/packaging

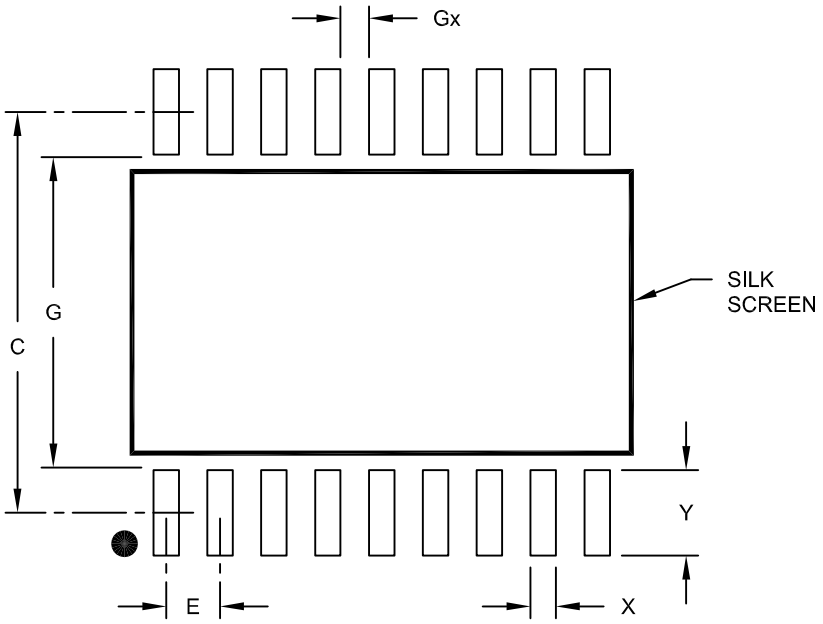

RECOMMENDED LAND PATTERN

Units		MILLIMETERS		
Dimension Limits		MIN	NOM	MAX
Contact Pitch	E		1.27 BSC	
Contact Pad Spacing	C		9.40	
Contact Pad Width	X			0.60
Contact Pad Length	Y			2.00
Distance Between Pads	Gx	0.67		
Distance Between Pads	G	7.40		

Notes:

1. Dimensioning and tolerancing per ASME Y14.5M

BSC: Basic Dimension. Theoretically exact value shown without tolerances.

Microchip Technology Drawing No. C04-2051A

© 2011-2012 Microchip Technology Inc.

20-Lead Plastic Shrink Small Outline (SS) – 5.30 mm Body [SSOP]

Note: For the most current package drawings, please see the Microchip Packaging Specification located at http://www.microchip.com/packaging

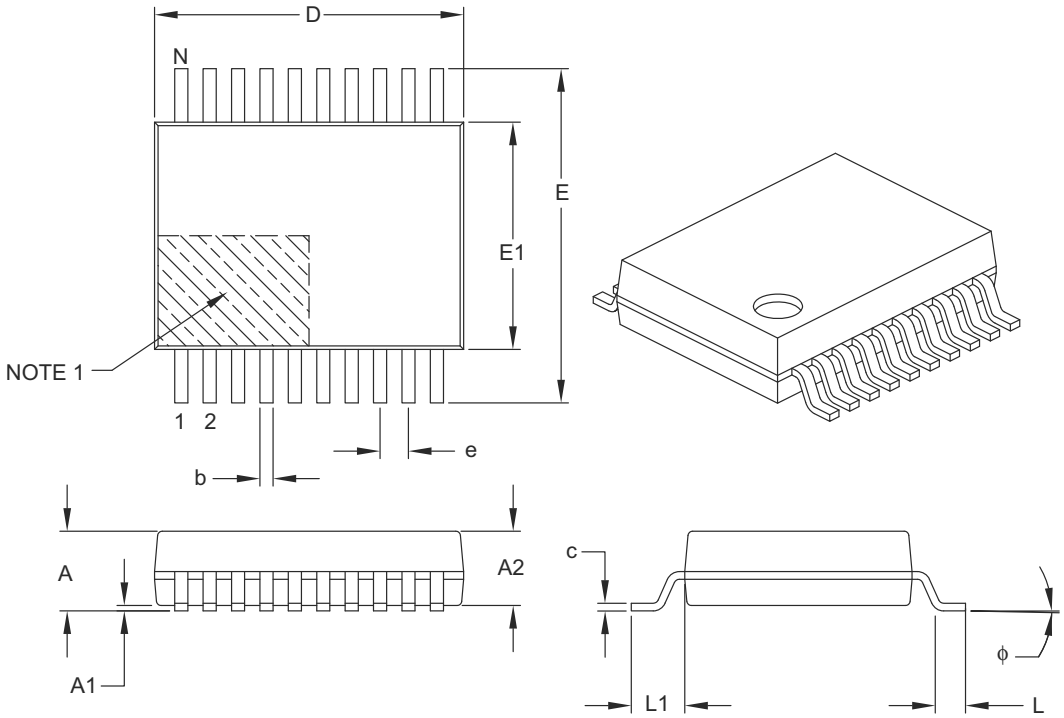

Units		MILLIMETERS		
Dimension Limits		MIN	NOM	MAX
Number of Pins	N	20		
Pitch	e	0.65 BSC		
Overall Height	A	–	–	2.00
Molded Package Thickness	A2	1.65	1.75	1.85
Standoff	A1	0.05	–	–
Overall Width	E	7.40	7.80	8.20
Molded Package Width	E1	5.00	5.30	5.60
Overall Length	D	6.90	7.20	7.50
Foot Length	L	0.55	0.75	0.95
Footprint	L1	1.25 REF		
Lead Thickness	c	0.09	–	0.25
Foot Angle	ϕ	0°	4°	8°
Lead Width	b	0.22	–	0.38

Notes:

1. Pin 1 visual index feature may vary, but must be located within the hatched area.
2. Dimensions D and E1 do not include mold flash or protrusions. Mold flash or protrusions shall not exceed 0.20 mm per side.
3. Dimensioning and tolerancing per ASME Y14.5M.

   BSC: Basic Dimension. Theoretically exact value shown without tolerances.
   REF: Reference Dimension, usually without tolerance, for information purposes only.

Microchip Technology Drawing C04-072B

20-Lead Plastic Shrink Small Outline (SS) - 5.30 mm Body [SSOP]

Note: For the most current package drawings, please see the Microchip Packaging Specification located at http://www.microchip.com/packaging

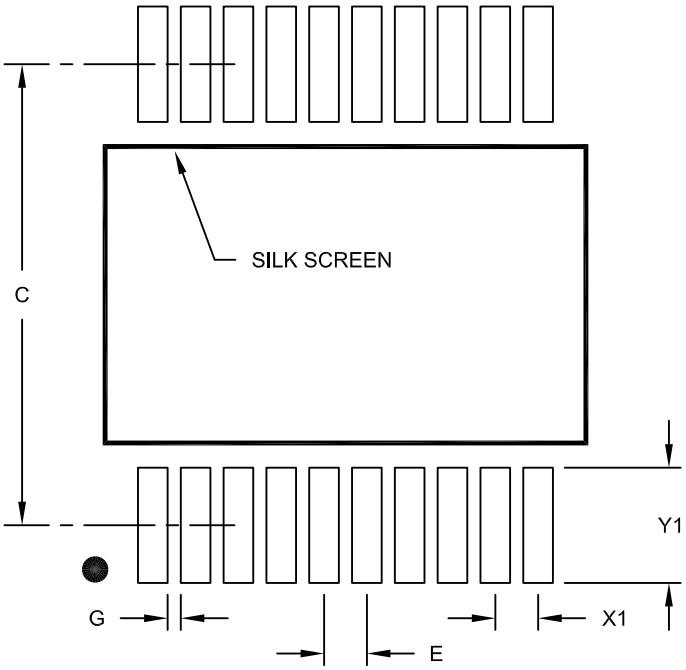

RECOMMENDED LAND PATTERN

Units		MILLIMETERS		
Dimension Limits		MIN	NOM	MAX
Contact Pitch	E	0.65 BSC		
Contact Pad Spacing	C		7.20	
Contact Pad Width (X20)	X1			0.45
Contact Pad Length (X20)	Y1			1.75
Distance Between Pads	G	0.20		

Notes:

1. Dimensioning and tolerancing per ASME Y14.5M
   BSC: Basic Dimension. Theoretically exact value shown without tolerances.

Microchip Technology Drawing No. C04-2072A

© 2011-2012 Microchip Technology Inc.

28-Lead Plastic Shrink Small Outline (SS) – 5.30 mm Body [SSOP]

Note: For the most current package drawings, please see the Microchip Packaging Specification located at http://www.microchip.com/packaging

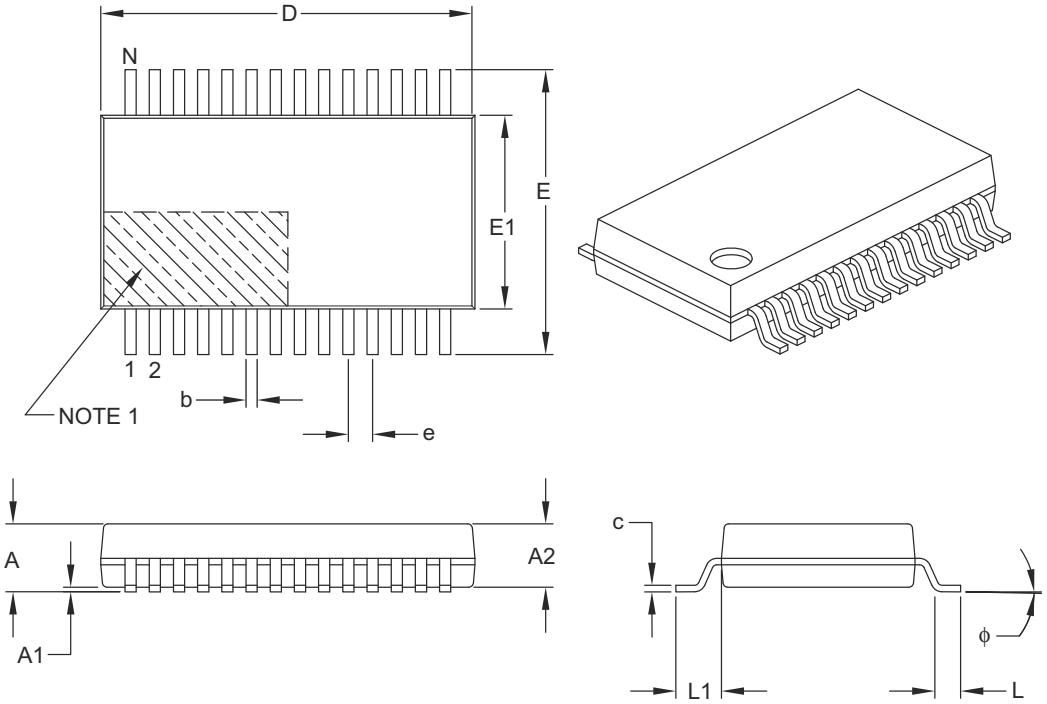

Units		MILLIMETERS		
Dimension Limits		MIN	NOM	MAX
Number of Pins	N	28		
Pitch	e	0.65 BSC		
Overall Height	A	–	–	2.00
Molded Package Thickness	A2	1.65	1.75	1.85
Standoff	A1	0.05	–	–
Overall Width	E	7.40	7.80	8.20
Molded Package Width	E1	5.00	5.30	5.60
Overall Length	D	9.90	10.20	10.50
Foot Length	L	0.55	0.75	0.95
Footprint	L1	1.25 REF		
Lead Thickness	c	0.09	–	0.25
Foot Angle	ϕ	0°	4°	8°
Lead Width	b	0.22	–	0.38

Notes:

1. Pin 1 visual index feature may vary, but must be located within the hatched area.
2. Dimensions D and E1 do not include mold flash or protrusions. Mold flash or protrusions shall not exceed 0.20 mm per side.
3. Dimensioning and tolerancing per ASME Y14.5M.

   BSC: Basic Dimension. Theoretically exact value shown without tolerances.

   REF: Reference Dimension, usually without tolerance, for information purposes only.

Microchip Technology Drawing C04-073B

28-Lead Plastic Shrink Small Outline (SS) - 5.30 mm Body [SSOP]

Note: For the most current package drawings, please see the Microchip Packaging Specification located at http://www.microchip.com/packaging

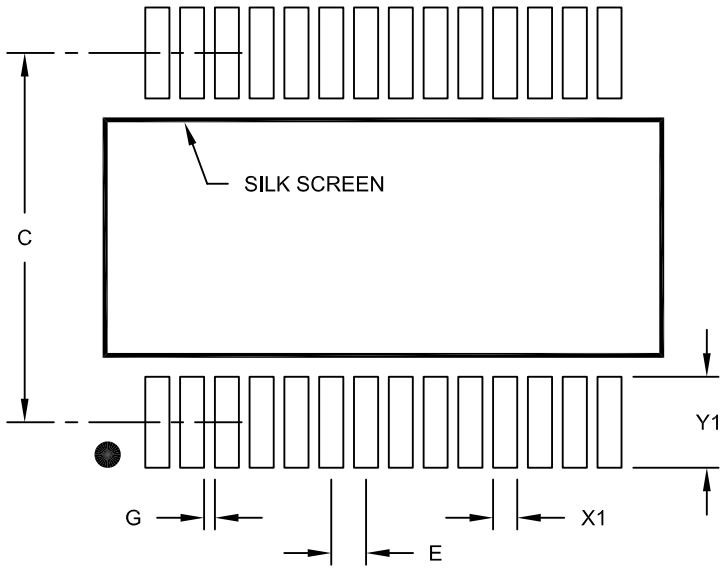

RECOMMENDED LAND PATTERN

Units		MILLIMETERS		
Dimension Limits		MIN	NOM	MAX
Contact Pitch	E	0.65 BSC		
Contact Pad Spacing	C		7.20	
Contact Pad Width (X28)	X1			0.45
Contact Pad Length (X28)	Y1			1.75
Distance Between Pads	G	0.20		

Notes:

1. Dimensioning and tolerancing per ASME Y14.5M
   BSC: Basic Dimension. Theoretically exact value shown without tolerances.

Microchip Technology Drawing No. C04-2073A

© 2011-2012 Microchip Technology Inc.

28-Lead Plastic Small Outline (SO) - Wide, 7.50 mm Body [SOIC]

Note: For the most current package drawings, please see the Microchip Packaging Specification located at http://www.microchip.com/packaging

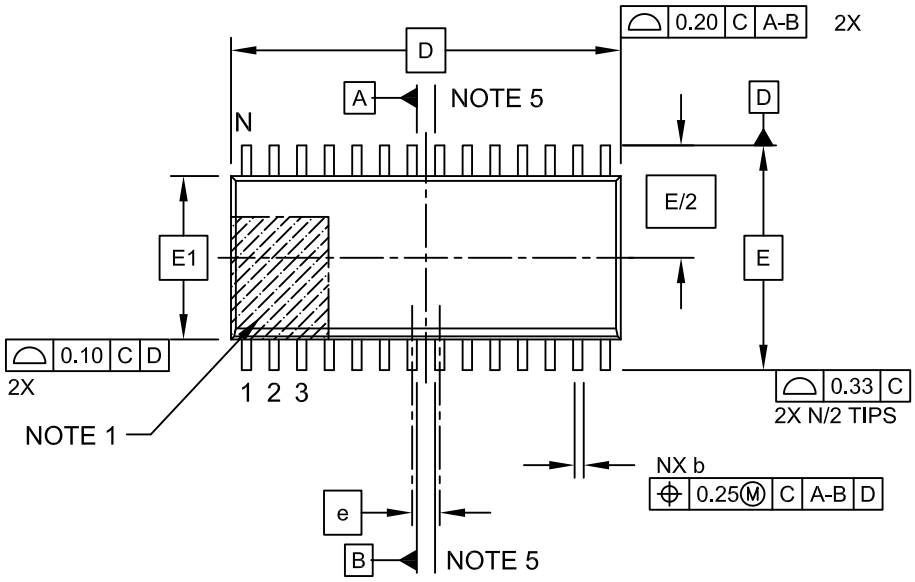

TOP VIEW

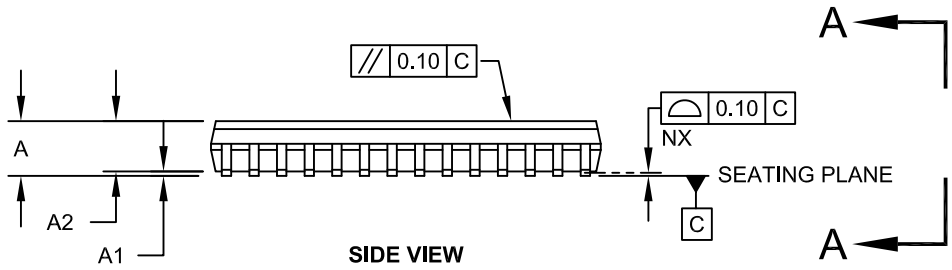

SIDE VIEW

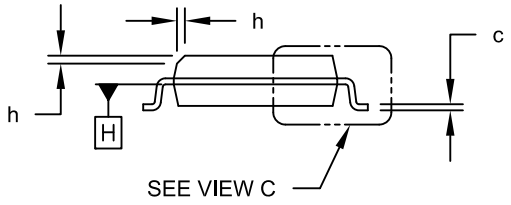

VIEW A-A

Microchip Technology Drawing C04-052C Sheet 1 of 2

28-Lead Plastic Small Outline (SO) - Wide, 7.50 mm Body [SOIC]

Note: For the most current package drawings, please see the Microchip Packaging Specification located at http://www.microchip.com/packaging

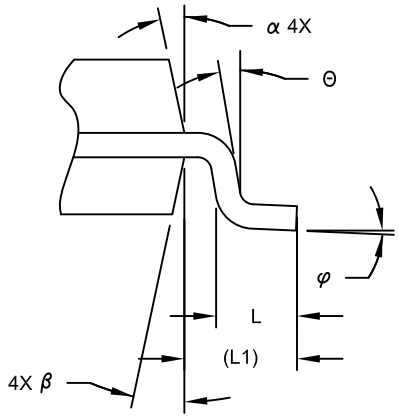

VIEW C

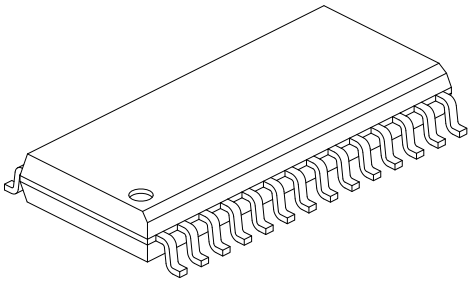

Units		MILLIMETERS		
Dimension Limits		MIN	NOM	MAX
Number of Pins	N	28		
Pitch	e	1.27 BSC		
Overall Height	A	-	-	2.65
Molded Package Thickness	A2	2.05	-	-
Standoff §	A1	0.10	-	0.30
Overall Width	E	10.30 BSC		
Molded Package Width	E1	7.50 BSC		
Overall Length	D	17.90 BSC		
Chamfer (Optional)	h	0.25	-	0.75
Foot Length	L	0.40	-	1.27
Footprint	L1	1.40 REF		
Lead Angle	Θ	0°	-	-
Foot Angle	φ	0°	-	8°
Lead Thickness	c	0.18	-	0.33
Lead Width	b	0.31	-	0.51
Mold Draft Angle Top	α	5°	-	15°
Mold Draft Angle Bottom	β	5°	-	15°

Notes:

1. Pin 1 visual index feature may vary, but must be located within the hatched area.
2. § Significant Characteristic
3. Dimension D does not include mold flash, protrusions or gate burrs, which shall not exceed 0.15 mm per end. Dimension E1 does not include interlead flash or protrusion, which shall not exceed 0.25 mm per side.
4. Dimensioning and tolerancing per ASME Y14.5M
   BSC: Basic Dimension. Theoretically exact value shown without tolerances.
   REF: Reference Dimension, usually without tolerance, for information purposes only.
5. Datums A & B to be determined at Datum H.

Microchip Technology Drawing C04-052C Sheet 2 of 2

© 2011-2012 Microchip Technology Inc.

28-Lead Plastic Small Outline (SO) - Wide, 7.50 mm Body [SOIC]

Note: For the most current package drawings, please see the Microchip Packaging Specification located at http://www.microchip.com/packaging

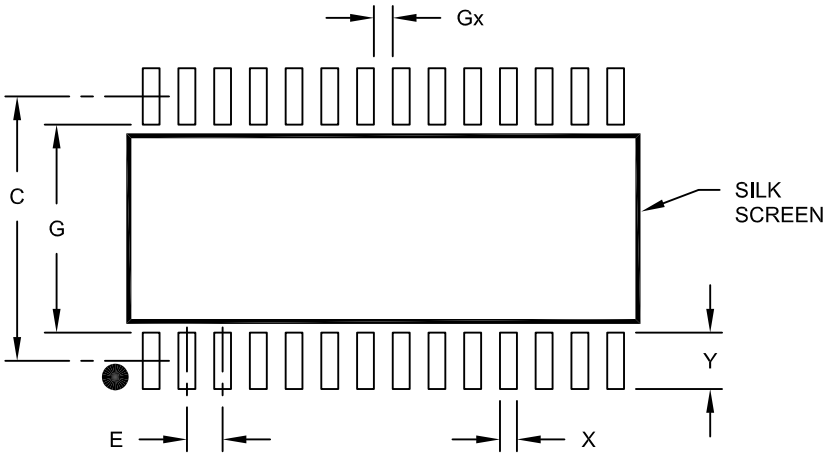

RECOMMENDED LAND PATTERN

Units		MILLIMETERS		
Dimension Limits		MIN	NOM	MAX
Contact Pitch	E		1.27 BSC	
Contact Pad Spacing	C		9.40	
Contact Pad Width (X28)	X			0.60
Contact Pad Length (X28)	Y			2.00
Distance Between Pads	Gx	0.67		
Distance Between Pads	G	7.40		

Notes:

1. Dimensioning and tolerancing per ASME Y14.5M

BSC: Basic Dimension. Theoretically exact value shown without tolerances.

Microchip Technology Drawing No. C04-2052A

28-Lead Skinny Plastic Dual In-Line (SP) – 300 mil Body [SPDIP]

Note: For the most current package drawings, please see the Microchip Packaging Specification located at http://www.microchip.com/packaging

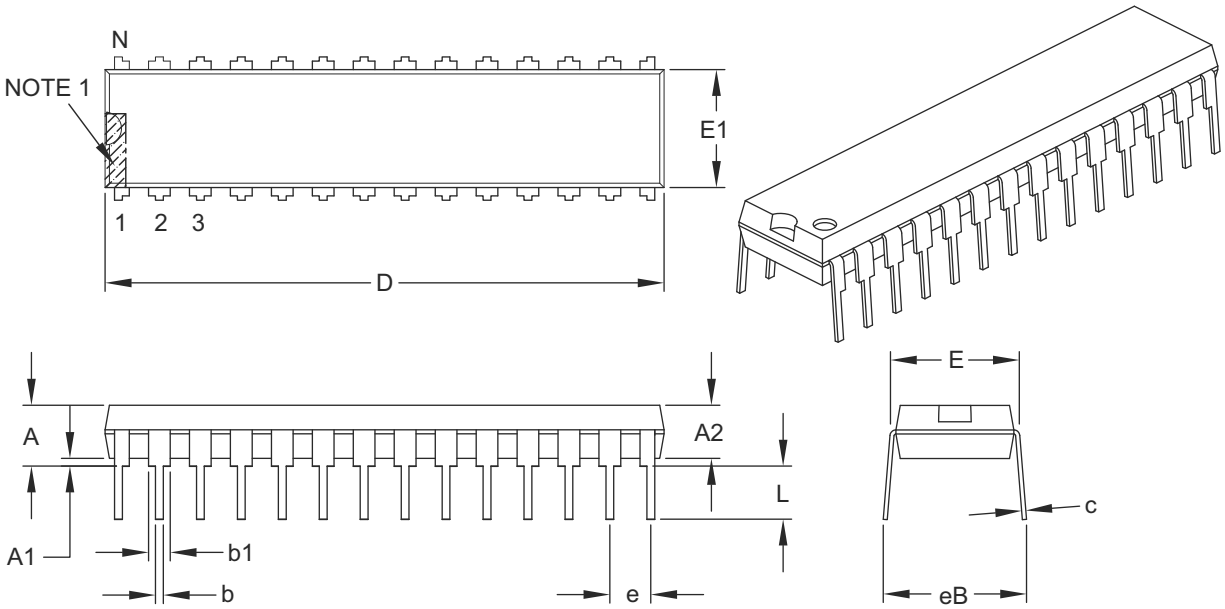

Units		INCHES		
Dimension Limits		MIN	NOM	MAX
Number of Pins	N	28		
Pitch	e	.100 BSC		
Top to Seating Plane	A	–	–	.200
Molded Package Thickness	A2	.120	.135	.150
Base to Seating Plane	A1	.015	–	–
Shoulder to Shoulder Width	E	.290	.310	.335
Molded Package Width	E1	.240	.285	.295
Overall Length	D	1.345	1.365	1.400
Tip to Seating Plane	L	.110	.130	.150
Lead Thickness	c	.008	.010	.015
Upper Lead Width	b1	.040	.050	.070
Lower Lead Width	b	.014	.018	.022
Overall Row Spacing §	eB	–	–	.430

Notes:
1. Pin 1 visual index feature may vary, but must be located within the hatched area.
2. § Significant Characteristic.
3. Dimensions D and E1 do not include mold flash or protrusions. Mold flash or protrusions shall not exceed .010" per side.
4. Dimensioning and tolerancing per ASME Y14.5M.
   BSC: Basic Dimension. Theoretically exact value shown without tolerances.

Microchip Technology Drawing C04-070B

© 2011-2012 Microchip Technology Inc.

28-Lead Plastic Quad Flat, No Lead Package (MM) - 6x6x0.9mm Body [QFN-S] With 0.40 mm Terminal Length

Note: For the most current package drawings, please see the Microchip Packaging Specification located at http://www.microchip.com/packaging

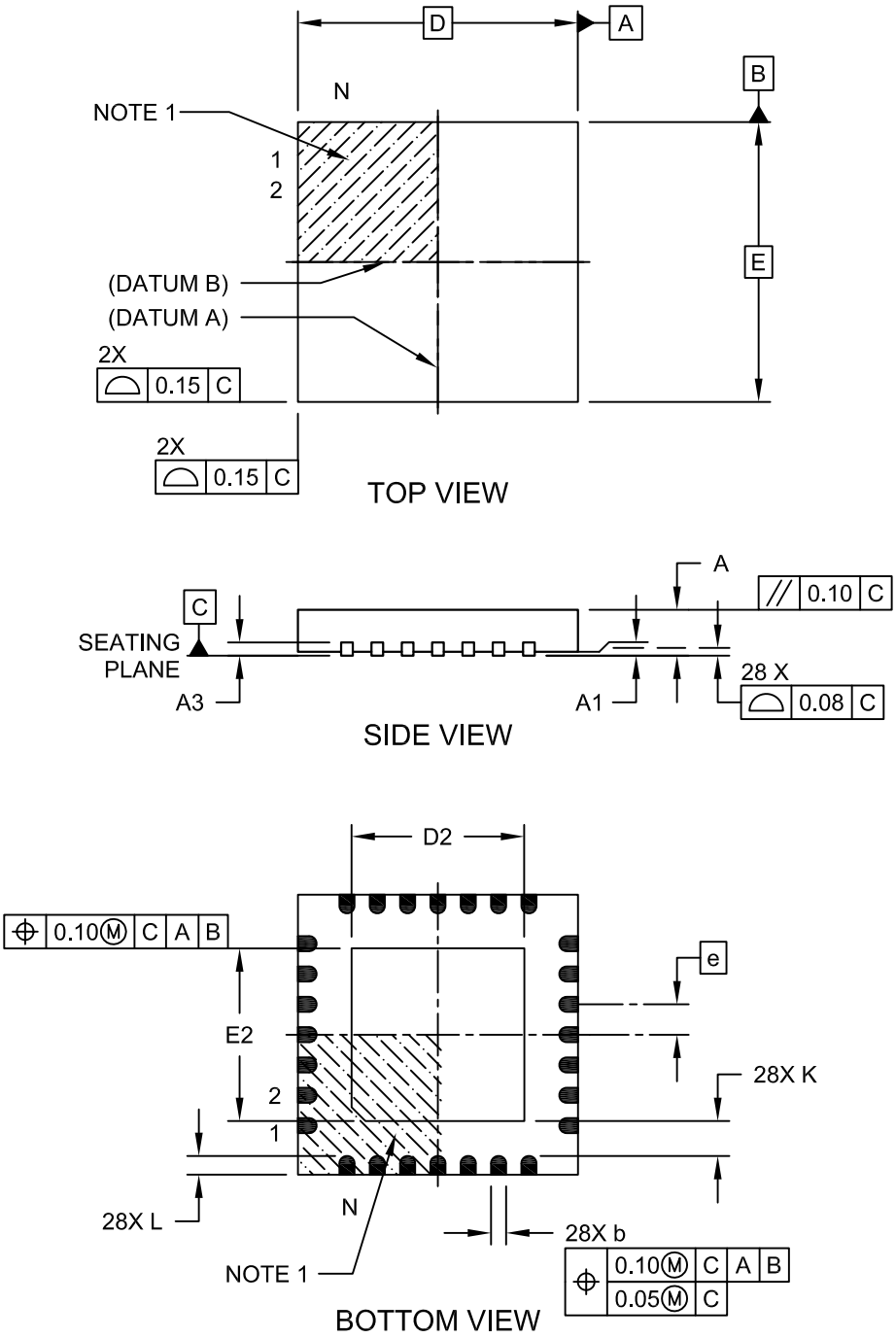

Microchip Technology Drawing C04-124C Sheet 1 of 2

28-Lead Plastic Quad Flat, No Lead Package (MM) - 6x6x0.9mm Body [QFN-S] With 0.40 mm Terminal Length

Note: For the most current package drawings, please see the Microchip Packaging Specification located at http://www.microchip.com/packaging

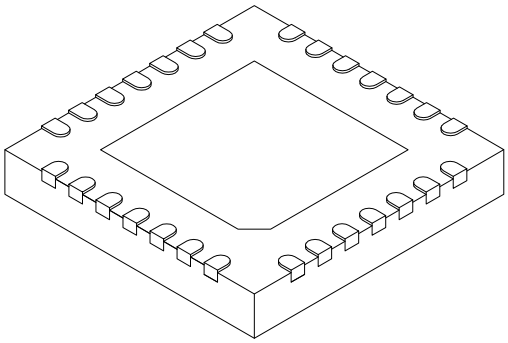

Units		MILLIMETERS		
Dimension Limits		MIN	NOM	MAX
Number of Pins	N	28		
Pitch	e	0.65 BSC		
Overall Height	A	0.80	0.90	1.00
Standoff	A1	0.00	0.02	0.05
Terminal Thickness	A3	0.20 REF		
Overall Width	E	6.00 BSC		
Exposed Pad Width	E2	3.65	3.70	4.70
Overall Length	D	6.00 BSC		
Exposed Pad Length	D2	3.65	3.70	4.70
Terminal Width	b	0.23	0.30	0.35
Terminal Length	L	0.30	0.40	0.50
Terminal-to-Exposed Pad	K	0.20	-	-

Notes:

1. Pin 1 visual index feature may vary, but must be located within the hatched area.
2. Package is saw singulated
3. Dimensioning and tolerancing per ASME Y14.5M

   BSC: Basic Dimension. Theoretically exact value shown without tolerances.

   REF: Reference Dimension, usually without tolerance, for information purposes only.

Microchip Technology Drawing C04-124C Sheet 2 of 2

© 2011-2012 Microchip Technology Inc.

28-Lead Plastic Quad Flat, No Lead Package (MM) – 6x6x0.9 mm Body [QFN-S] with 0.40 mm Contact Length

Note: For the most current package drawings, please see the Microchip Packaging Specification located at http://www.microchip.com/packaging

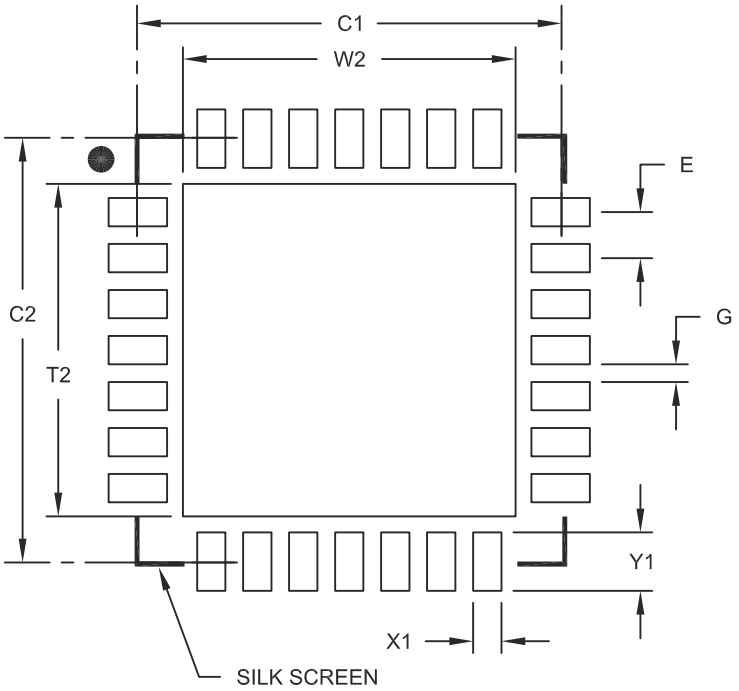

RECOMMENDED LAND PATTERN

Units		MILLIMETERS		
Dimension Limits		MIN	NOM	MAX
Contact Pitch	E		0.65 BSC	
Optional Center Pad Width	W2			4.70
Optional Center Pad Length	T2			4.70
Contact Pad Spacing	C1		6.00	
Contact Pad Spacing	C2		6.00	
Contact Pad Width (X28)	X1			0.40
Contact Pad Length (X28)	Y1			0.85
Distance Between Pads	G	0.25		

Notes:

1. Dimensioning and tolerancing per ASME Y14.5M
   BSC: Basic Dimension. Theoretically exact value shown without tolerances.

Microchip Technology Drawing No. C04-2124A

36-Terminal Very Thin Thermal Leadless Array Package (TL) – 5x5x0.9 mm Body with Exposed Pad [VTLA]

Note: For the most current package drawings, please see the Microchip Packaging Specification located at http://www.microchip.com/packaging

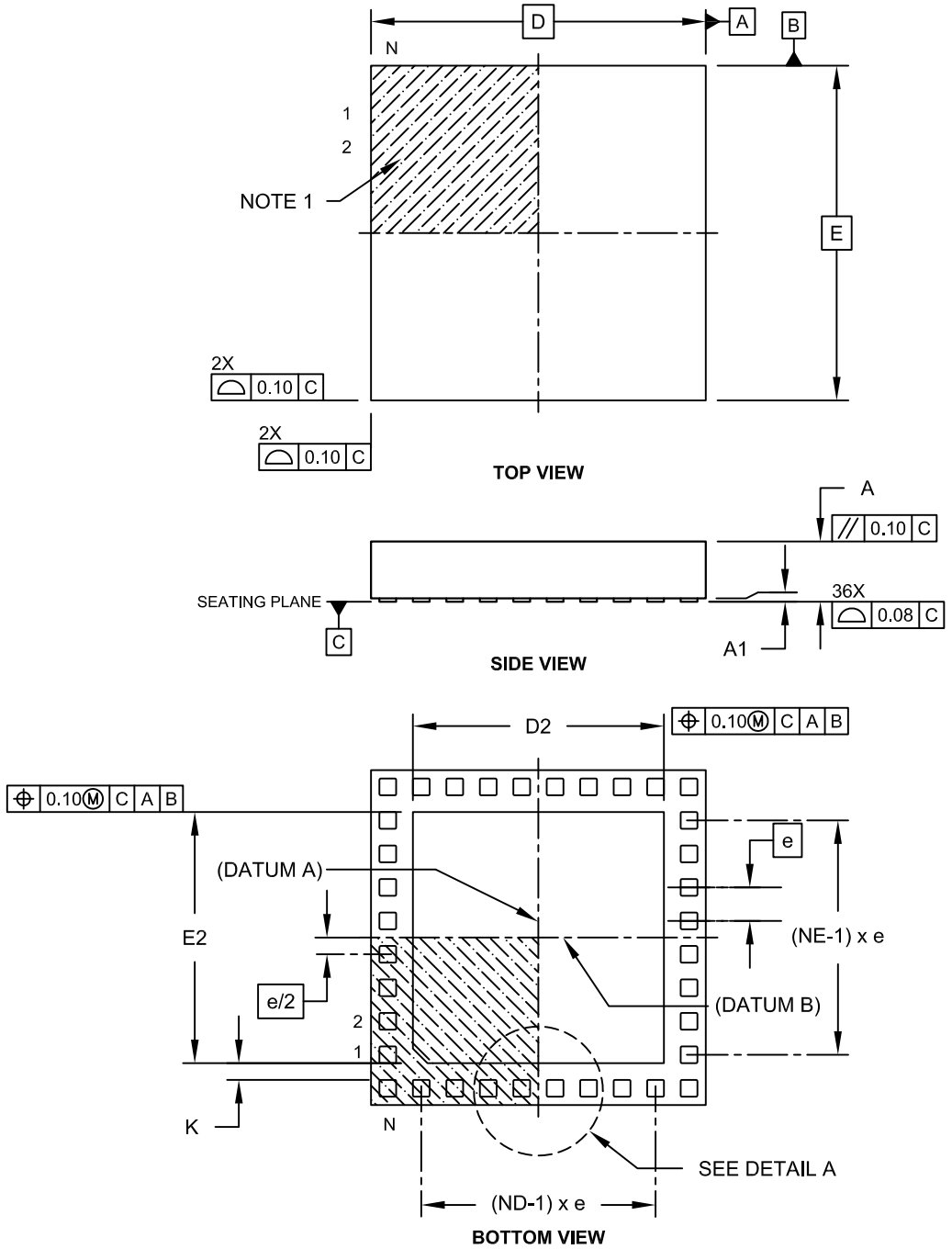

Microchip Technology Drawing C04-187C Sheet 1 of 2

© 2011-2012 Microchip Technology Inc.

36-Terminal Very Thin Thermal Leadless Array Package (TL) – 5x5x0.9 mm Body with Exposed Pad [VTLA]

Note: For the most current package drawings, please see the Microchip Packaging Specification located at http://www.microchip.com/packaging

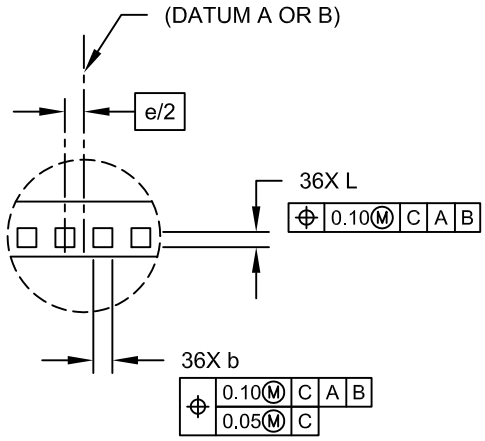

DETAIL A

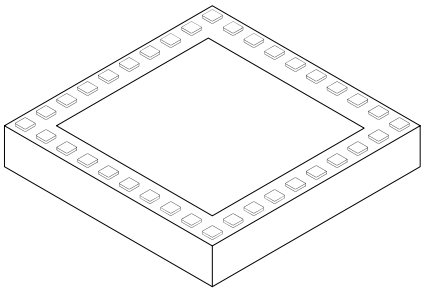

Units		MILLIMETERS		
Dimension	Limits	MIN	NOM	MAX
Number of Pins	N	36		
Number of Pins per Side	ND	10		
Number of Pins per Side	NE	8		
Pitch	e	0.50 BSC		
Overall Height	A	0.80	0.90	1.00
Standoff	A1	0.025	-	0.075
Overall Width	E	5.00 BSC		
Exposed Pad Width	E2	3.60	3.75	3.90
Overall Length	D	5.00 BSC		
Exposed Pad Length	D2	3.60	3.75	3.90
Contact Width	b	0.20	0.25	0.30
Contact Length	L	0.20	0.25	0.30
Contact-to-Exposed Pad	K	0.20	-	-

Notes:

1. Pin 1 visual index feature may vary, but must be located within the hatched area.
2. Package is saw singulated.
3. Dimensioning and tolerancing per ASME Y14.5M.
   BSC: Basic Dimension. Theoretically exact value shown without tolerances.
   REF: Reference Dimension, usually without tolerance, for information purposes only.

Microchip Technology Drawing C04-187C Sheet 2 of 2

NOTES:

© 2011-2012 Microchip Technology Inc.

APPENDIX A: REVISION HISTORY

Revision A (July 2011)

This is the initial released version of this document.

Revision B (February 2012)

This revision includes formatting changes and minor typographical updates throughout the data sheet text.

Where applicable, new sections were added to each peripheral chapter that provide information and links to related resources, as well as helpful tips. For examples, see **Section 18.1 "UART Helpful Tips"** and **Section 18.1 "UART Helpful Tips"**.

The data sheet status was updated from Advance Information to Preliminary.

In addition, all occurrences to the package known as TLA were updated to VTLA.

All other major changes are referenced by their respective section in Table A-1.

TABLE A-1: MAJOR SECTION UPDATES

Section Name	Update Description
"16-Bit Microcontrollers and Digital Signal Controllers with High-Speed PWM, ADC and Comparators"	The previous content was reorganized and is now presented as the first page of the data sheet. Relocated the Referenced Sources content, which was previously presented in **Section 1.0 "Device Overview"**.
Section 2.0 "Guidelines for Getting Started with 16-Bit Digital Signal Controllers"	Updated the Recommended Minimum Connection diagram (see Figure 2-1).
Section 4.0 "Memory Organization"	Updated the Program Memory Map (see Figure 4-1). Updated bits 10-8 in IPC27 of the Interrupt Controller Register Map for dsPIC33FJ06GS001 Devices (see Table 4-4). Renamed the CHOPCLK<6:0> bits in the CHOP register to: CHOP<6:0> in the High-Speed PWM Register Map (see Table 4-12). Removed RPINR11 from the Peripheral Pin Select Input Register Map for the dsPIC33FJ06GS001 Device (see Table 4-24). Added the REFOMD bit to PMD4 in the PMD Register Map for the dsPIC33FJ06GS001 device (see Table 4-34).
Section 21.0 "Constant Current Source"	Added the Current Source Calibration bits (ISRCCAL<5:0>) to the Current Source Control register (see Register 21-1).
Section 22.0 "Special Features"	Added the Constant Current Source Calibration Register (see Register 22-1).
Section 25.0 "Electrical Characteristics"	Updated the Absolute Maximum Ratings(1). Added Note 1 to the Operating MIPS vs. Voltage specification (see Table 25-1). Updated all DC Characteristics: I/O Pin Output Specifications (see Table 25-10). Updated the typical value for Parameters F20a and F20b in the Internal FRC Accuracy specification (see Table 25-19). Updated the minimum and maximum values for Parameter TA20, and the minimum value for Parameter TA11 in the Timer1 External Clock Timing Requirements (see Table 25-23). Updated the OC/PWM Module Timing Characteristics diagram (see Figure 25-8). Updated the minimum and maximum values for the Simple OC/PWM Mode Timing Requirements (see Table 25-27). Added Note 4 and Note 5 to the 10-Bit, High-Speed ADC Module Specifications (see Table 25-39).
Section 26.0 "DC and AC Device Characteristics Graphs"	Added new chapter.

Revision C (August 2012)

This revision includes minor typographical updates and content corrections. Major changes include new figures in **Section 26.0 "DC and AC Device Characteristics Graphs"**, updated values in Table 25-39 in **Section 25.0 "Electrical Characteristics"** and updated package drawings in **Section 27.0 "Packaging Information"**.

© 2011-2012 Microchip Technology Inc.

INDEX

A

AC Characteristics 282
  Internal LPRC Accuracy 285
  Internal RC Accuracy 285
  Load Conditions 282
  Temperature and Voltage Specifications 282
Alternate Interrupt Vector Table (AIVT) 87
Arithmetic Logic Unit (ALU) 31
Assembler
  MPASM Assembler 268
Auxiliary Clock Generation 125

B

Bit-Reversed Addressing 69
  Example 70
  Implementation 69
  Sequence Table (16-Entry) 70
Block Diagrams
  16-Bit Timer1 Module 173
  Boost Converter Implementation 21
  Connections for On-Chip Voltage Regulator 256
  Constant Current Source 249
  CPU Core 26
  Digital PFC 21
  DSP Engine 32
  dsPIC33FJ06GS001 Device ADC 226
  dsPIC33FJ06GS001/101A/102A/202A and dsPIC33FJ09GS302 14
  dsPIC33FJ06GS101A Device ADC 227
  dsPIC33FJ06GS102A Device ADC 228
  dsPIC33FJ06GS202A Device ADC 229
  dsPIC33FJ09GS302 Device ADC 230
  High-Speed Analog Comparator 243
  Hysteresis Control 245
  I^2C 212
  Input Capture 177
  Interleaved PFC 22
  MCLR Pin Connections 18
  Multiplexing of Remappable Output for RPn 150
  Oscillator System 123
  Output Compare 179
  Partitioned Output Pair, Complementary PWM Mode 186
  Phase-Shifted Full-Bridge Converter 23
  PLL 125
  Recommended Minimum Connection 18
  Remappable MUX Input for U1RX 148
  Reset System 79
  Shared Port Structure 146
  Simplified Conceptual High-Speed PWM 185
  Single-Phase Synchronous Buck Converter 22
  SPI 205
  Type B Timer2 175
  UART 219
  Watchdog Timer (WDT) 257
Brown-out Reset (BOR) 251, 256

C

C Compilers
  MPLAB C18 268
Capacitor on Internal Voltage Regulator (VCAP) 18
Clock Switching 134
  Enabling 134
  Sequence 134
Code Examples
  Port Write/Read 147
  PWRSAV Instruction Syntax 137
Code Protection 251
Configuration Bits 251
  Description 254
Configuring Analog Port Pins 147
Constant Current Source
  Description 249
  Features 249
CPU
  Barrel Shifter 35
  Control Registers 28
  Data Addressing Overview 25
  DSP Engine Overview 25
  MCU Special Features 26
  Special Features 251
CPU Clocking System 124
  PLL Configuration 125
  Selection 124
  Sources 124
Customer Change Notification Service 346
Customer Notification Service 346
Customer Support 346

D

DAC 244
  Buffer Gain 244
  Output Range 245
Data Accumulators and Adder/Subtracter 33
  Data Space Write Saturation 35
  Overflow and Saturation 33
  Round Logic 34
  Write Back 34
Data Address Space 39
  Alignment 39
  Memory Map for Devices with 1 Kbyte of RAM 41
  Memory Map for Devices with 256 Bytes of RAM 40
  Near Data Space 39
  Software Stack 66
  Width 39
  X and Y Data 42
DC and AC Characteristics
  Graphs and Tables 315
DC Characteristics
  Doze Current (IDOZE) 277
  I/O Pin Input Specifications 278
  I/O Pin Output Specifications 280
  Idle Current (IIDLE) 275
  Operating Current (IDD) 274
  Operating MIPS vs. Voltage 272
  Power-Down Current (IPD) 276
  Program Memory 281
  Temperature and Voltage Specifications 273

DC Specifications
DAC Output (DACOUT Pin) ... 312
Development Support ... 267
Doze Mode ... 138
DSC Guidelines ... 17
Basic Connection Requirements ... 17
Decoupling Capacitors ... 17
DSP Engine ... 31
Multiplier ... 33

E

Electrical Characteristics ... 271
Absolute Maximum Ratings ... 271
Equations
Device Operating Frequency ... 124
FOSC Calculation ... 125
Maximum Page Erase Time ... 76
Minimum Page Erase Time ... 76
XT with PLL Mode Example ... 125
Errata ... 11

F

Fail-Safe Clock Monitor (FSCM) ... 135
Flash Program Memory ... 75
Control Registers ... 76
Operations ... 76
Table Instructions ... 75
Flexible Configuration ... 251

H

High-Speed 10-Bit ADC ... 225
Description ... 225
Features ... 225
Functionality ... 225
High-Speed Analog Comparator ... 243
Applications ... 244
Control Registers ... 245
DAC ... 244
Digital Logic ... 244
Hysteresis ... 245
Input Range ... 244
Interaction with I/O Buffers ... 245
High-Speed PWM ... 183
Control Registers ... 186

I

I/O Ports ... 145
Helpful Tips ... 152
Parallel I/O (PIO) ... 145
Resources ... 152
Write/Read Timing ... 147
I^2C
Operating Modes ... 211
Registers ... 213
In-Circuit Debugger ... 258
In-Circuit Emulation ... 251
In-Circuit Serial Programming (ICSP) ... 251, 258
Analog, Digital Pins Configuration ... 20
Pins ... 19
Input Capture ... 177
Input Change Notification ... 147
Instruction Addressing Modes ... 66
File Register Instructions ... 66
Fundamental Modes Supported ... 67
MAC Instructions ... 67
MCU Instructions ... 66
Move and Accumulator Instructions ... 67
Other Instructions ... 67
Instruction Set
Overview ... 262
Summary ... 259
Instruction-Based Power-Saving Modes ... 137
Idle ... 138
Sleep ... 137
Interfacing Program and Data Memory Spaces ... 71
Internal RC Oscillator
Use with WDT ... 257
Internet Address ... 346
Interrupt Control and Status Registers ... 90
IECx ... 90
IFSx ... 90
INTCON1 ... 90
INTCON2 ... 90
INTTREG ... 90
IPCx ... 90
Interrupt Setup Procedures ... 122
Initialization ... 122
Interrupt Disable ... 122
Interrupt Service Routine ... 122
Trap Service Routine ... 122
Interrupt Vector Table (IVT) ... 87
Interrupts Coincident with Power Save Instructions ... 138

J

JTAG Boundary Scan Interface ... 251
JTAG Interface ... 258

L

LEBCONx (PWMx Leading-Edge Blanking Control) ... 202

M

Master Clear ($\overline{MCLR}$) ... 18
Memory Organization ... 37
Microchip Internet Web Site ... 346
Modulo Addressing ... 68
Applicability ... 69
Operation Example ... 68
Start and End Address ... 68
W Address Register Selection ... 68
MPLAB ASM30 Assembler, Linker, Librarian ... 268
MPLAB Integrated Development
Environment Software ... 267
MPLAB PM3 Device Programmer ... 270
MPLAB REAL ICE In-Circuit Emulator System ... 269
MPLINK Object Linker/MPLIB Object Librarian ... 268

O

Open-Drain Configuration ... 147
Oscillator
External Pins ... 19
Value Conditions on Start-up ... 20
Oscillator Configuration ... 123
Output Compare ... 179

© 2011-2012 Microchip Technology Inc.

P

Packaging 319
  Details 321
  Marking 319
Peripheral Module Disable (PMD) 138
Peripheral Pin Select (PPS) 148
  Registers 153
Pinout I/O Descriptions 15
Power-on Reset (POR) 84
Power-Saving Features 137
  Clock Frequency and Switching 137
Program Address Space 37
  Construction 71
  Data Access from Program Memory Using
    Program Space Visibility 74
  Data Access from Program Memory Using
    Table Instructions 73
  Data Access from, Address Generation 72
  Memory Maps 37
  Table Read Instructions
    TBLRDH 73
    TBLRDL 73
  Visibility Operation 74
Program Memory
  Interrupt Vector 38
  Organization 38
  Reset Vector 38
Pseudo-Random Generator 135

R

Reader Response 347
Reference Clock Generation 125
Register Maps
  Configuration Flash Bytes
    (dsPIC33FJ06GS001/101A/X02A) 252
  Configuration Flash Bytes
    (dsPIC33FJ09GS302) 252
Registers
  ACLKCON (Auxiliary Clock Divisor Control) 131
  ADCON (ADC Control) 231
  ADCPC0 (ADC Convert Pair Control 0) 236
  ADCPC1 (ADC Convert Pair Control 1) 238
  ADCPC3 (ADC Convert Pair Control 3) 240
  ADPCFG (ADC Port Configuration) 235
  ADSTAT (ADC Status) 233
  ALTDTRx (PWMx Alternate Dead-Time) 195
  AUXCONx (PWM Auxiliary Control) 204
  CHOP (PWM Chop Clock Generator) 203
  CLKDIV (Clock Divisor) 128
  CMPCONx (Comparator Control x) 246
  CMPDACx (Comparator DAC Control x) 248
  Constant Current Source Calibration 253
  CORCON (Core Control) 30, 91
  DTRx (PWMx Dead-Time) 195
  FCLCONx (PWMx Fault Current-Limit Control) 199
  I2C1CON (I2C1 Control) 213
  I2C1MSK (I2C1 Slave Mode Address Mask) 217
  I2C1STAT (I2C1 Status) 215
  IC1CON (Input Capture 1 Control) 178
  IEC0 (Interrupt Enable Control 0) 101
  IEC1 (Interrupt Enable Control 1) 102
  IEC3 (Interrupt Enable Control 3) 103
  IEC4 (Interrupt Enable Control 4) 103
  IEC5 (Interrupt Enable Control 5) 104
  IEC6 (Interrupt Enable Control 6) 105
  IEC7 (Interrupt Enable Control 7) 106
  IFS0 (Interrupt Flag Status 0) 95
  IFS1 (Interrupt Flag Status 1) 96
  IFS3 (Interrupt Flag Status 3) 97
  IFS4 (Interrupt Flag Status 4) 97
  IFS5 (Interrupt Flag Status 5) 98
  IFS6 (Interrupt Flag Status 6) 99
  IFS7 (Interrupt Flag Status 7) 100
  INTCON1 (Interrupt Control 1) 92
  INTCON2 (Interrupt Control 2) 94
  INTTREG (Interrupt Control and Status) 121
  IOCONx (PWMx I/O Control) 197
  IPC0 (Interrupt Priority Control 0) 107
  IPC1 (Interrupt Priority Control 1) 108
  IPC14 (Interrupt Priority Control 14) 113
  IPC16 (Interrupt Priority Control 16) 113
  IPC2 (Interrupt Priority Control 2) 109
  IPC20 (Interrupt Priority Control 20) 114
  IPC23 (Interrupt Priority Control 23) 115
  IPC24 (Interrupt Priority Control 24) 116
  IPC25 (Interrupt Priority Control 25) 117
  IPC27 (Interrupt Priority Control 27) 118
  IPC28 (Interrupt Priority Control 28) 119
  IPC29 (Interrupt Priority Control 29) 120
  IPC3 (Interrupt Priority Control 3) 110
  IPC4 (Interrupt Priority Control 4) 111
  IPC5 (Interrupt Priority Control 5) 112
  IPC7 (Interrupt Priority Control 7) 112
  ISRCCON (Constant Current Source Control) 250
  LFSR (Linear Feedback Shift) 133
  MDC (PWM Master Duty Cycle) 189
  NVMCON (Flash Memory Control) 77
  NVMKEY (Nonvolatile Memory Key) 78
  OC1CON (Output Compare 1 Control) 181
  OSCCON (Oscillator Control) 126
  OSCTUN (Oscillator Tuning) 130
  PDCx (PWMx Generator Duty Cycle) 192
  PHASEx (PWMx Primary Phase Shift) 193
  PLLFBD (PLL Feedback Divisor) 129
  PMD1 (Peripheral Module Disable Control 1) 139
  PMD2 (Peripheral Module Disable Control 2) 140
  PMD3 (Peripheral Module Disable Control 3) 141
  PMD4 (Peripheral Module Disable Control 4) 141
  PMD6 (Peripheral Module Disable Control 6) 142
  PMD7 (Peripheral Module Disable Control 7) 143
  PMD8 (Peripheral Module Disable Control 8) 144
  PTCON (PWM Time Base Control) 187
  PTCON2 (PWM Clock Divider Select 2) 188
  PTPER (PWM Master Time Base) 188
  PWMCAPx (Primary PWMx Time Base Capture) 203
  PWMCONx (PWMx Control) 190
  RCON (Reset Control) 80
  REFOCON (Reference Oscillator Control) 132
  RPINR0 (Peripheral Pin Select Input 0) 153
  RPINR1 (Peripheral Pin Select Input 1) 154
  RPINR11 (Peripheral Pin Select Input 11) 158
  RPINR18 (Peripheral Pin Select Input 18) 159
  RPINR2 (Peripheral Pin Select Input 2) 155
  RPINR20 (Peripheral Pin Select Input 20) 160
  RPINR21 (Peripheral Pin Select Input 21) 161
  RPINR29 (Peripheral Pin Select Input 29) 162
  RPINR3 (Peripheral Pin Select Input 3) 156
  RPINR30 (Peripheral Pin Select Input 30) 163
  RPINR31 (Peripheral Pin Select Input 31) 164
  RPINR32 (Peripheral Pin Select Input 32) 165
  RPINR33 (Peripheral Pin Select Input 33) 166
  RPINR34 (Peripheral Pin Select Input 34) 167

RPINR7 (Peripheral Pin Select Input 7) 157
RPOR0 (Peripheral Pin Select Output 0) 168
RPOR1 (Peripheral Pin Select Output 1) 168
RPOR16 (Peripheral Pin Select Output 16) 172
RPOR17 (Peripheral Pin Select Output 17) 172
RPOR2 (Peripheral Pin Select Output 2) 169
RPOR3 (Peripheral Pin Select Output 3) 169
RPOR4 (Peripheral Pin Select Output 4) 170
RPOR5 (Peripheral Pin Select Output 5) 170
RPOR6 (Peripheral Pin Select Output 6) 171
RPOR7 (Peripheral Pin Select Output 7) 171
SDCx (PWMx Secondary Duty Cycle) 192
SEVTCMP (PWM Special Event Compare) 189
SPHASEx (PWMx Secondary Phase Shift) 194
SPIxCON1 (SPIx Control 1) 208
SPIxCON2 (SPIx Control 2) 210
SPIxSTAT (SPIx Status and Control) 207
SR (CPU STATUS) 91
SR (CPU Status) 28
STRIGx (PWMx Secondary Trigger Compare Value) 201
T1CON (Timer1 Control) 174
T2CON (Timer2 Control) 176
TRGCONx (PWMx Trigger Control) 196
TRIGx (PWMx Primary Trigger Compare Value) 201
U1MODE (UART1 Mode) 221
U1STA (UART1 Status and Control) 223
Reset
Brown-out Reset (BOR) 79, 84
Configuration Mismatch Reset (CM) 79
Illegal Condition Device Reset (IOPUWR) 79
Illegal Opcode 79
Security 79
Uninitialized W Register 79
Illegal Device Reset 85
Illegal Opcode 85
Master Clear Reset ($\overline{\text{MCLR}}$) 79
Power-on Reset (POR) 79
Power-up Timer Reset (PWRT) 84
Software RESET Instruction 79
System Reset
Cold Reset 82
Warm Reset 82
Trap Conflict 85
Trap Conflict Reset (TRAPR) 79
Uninitialized W Register 85
Watchdog Timer Out Reset (WDTO) 79
Reset Sequence 87
Revision History 339

S

Serial Peripheral Interface (SPI) 205
SFR Maps
Change Notification for dsPIC33FJ06GS001, dsPIC33FJ06GS101A 45
Change Notification for dsPIC33FJ06GS102A, dsPIC33FJ06GS202A, dsPIC33FJ09GS302 45
Constant Current Source 56
CPU Core 43
High-Speed 10-Bit ADC for dsPIC33FJ06GS001, dsPIC33FJ06GS101A 56
High-Speed 10-Bit ADC for dsPIC33FJ06GS102A, dsPIC33FJ06GS202A 57
High-Speed 10-Bit ADC for dsPIC33FJ09GS302 58
High-Speed PWM 52
High-Speed PWM Generator 1 52
High-Speed PWM Generator 2 for dsPIC33FJ06GS102A, dsPIC33FJ06GS202A, dsPIC33FJ09GS302 53
High-Speed PWM Generator 4 for dsPIC33FJ06GS001, dsPIC33FJ06GS101A, dsPIC33FJ09GS302 54
I2C1 55
Input Capture for dsPIC33FJ06GS202A, dsPIC33FJ09GS302 51
Interrupt Controller for dsPIC33FJ06GS001 46
Interrupt Controller for dsPIC33FJ06GS002A 48
Interrupt Controller for dsPIC33FJ06GS101A 47
Interrupt Controller for dsPIC33FJ06GS202A 49
Interrupt Controller for dsPIC33FJ09GS302 50
NVM 63
Output Compare for dsPIC33FJ06GS101A, dsPIC33FJ06GS102A, dsPIC33FJ06GS202A, dsPIC33FJ09GS302 51
Peripheral Pin Select Input for dsPIC33FJ06GS001 59
Peripheral Pin Select Input for dsPIC33FJ06GS101A, dsPIC33FJ06GS102A 59
Peripheral Pin Select Input for dsPIC33FJ06GS202A, dsPIC33FJ09GS302 60
Peripheral Pin Select Output for dsPIC33FJ06GS001, dsPIC33FJ06GS101A 60
Peripheral Pin Select Output for dsPIC33FJ06GS102A, dsPIC33FJ06GS202A, dsPIC33FJ09GS302 61
PMD for dsPIC33FJ06GS001 64
PMD for dsPIC33FJ06GS101A 64
PMD for dsPIC33FJ06GS102A 64
PMD for dsPIC33FJ06GS202A 65
PMD for dsPIC33FJ09GS302 65
PORTA 62
PORTB for dsPIC33FJ06GS001, dsPIC33FJ06GS101A 62
PORTB for dsPIC33FJ06GS102A, dsPIC33FJ06GS202A, dsPIC33FJ09GS302 62
SPI1 for dsPIC33FJ06GS101A, dsPIC33FJ06GS102A, dsPIC33FJ09GS202A, dsPIC33FJ09GS302 55
System Control 63
Timers 51
UART1 for dsPIC33FJ06GS101A, dsPIC33FJ06GS102A, dsPIC33FJ06GS202A, dsPIC33FJ09GS302 55
Software RESET Instruction (SWR) 85
Software Simulator (MPLAB SIM) 269
Software Stack Pointer, Frame Pointer
CALL Stack Frame 66
Symbols Used in Opcode Descriptions 260

T

Thermal Packaging Characteristics 272
Timer1 173
Timer2 175
Timing Diagrams
Analog-to-Digital Conversion per Input 310
Brown-out Situations 84
External Clock 283
High-Speed PWM 292
High-Speed PWM Fault 292
I/O 286
I2C1 Bus Data (Master Mode) 305
I2C1 Bus Data (Slave Mode) 307
I2C1 Bus Start/Stop Bits (Master Mode) 305
I2C1 Bus Start/Stop Bits (Slave Mode) 307
Input Capture (CAP1) 290
OC/PWM 291

© 2011-2012 Microchip Technology Inc.

Output Compare (OC1) 290
Reset, Watchdog Timer, Oscillator Start-up Timer and Power-up Timer 287
SPIx Master Mode (Full-Duplex, CKE = 0, CKP = x, SMP = 1) 296
SPIx Master Mode (Full-Duplex, CKE = 1, CKP = x, SMP = 1) 295
SPIx Master Mode (Half-Duplex, Transmit Only, CKE = 0) 293
SPIx Master Mode (Half-Duplex, Transmit Only, CKE = 1) 294
SPIx Slave Mode (Full-Duplex, CKE = 0, CKP = 0, SMP = 0) 303
SPIx Slave Mode (Full-Duplex, CKE = 0, CKP = 1, SMP = 0) 301
SPIx Slave Mode (Full-Duplex, CKE = 1, CKP = 0, SMP = 0) 297
SPIx Slave Mode (Full-Duplex, CKE = 1, CKP = 1, SMP = 0) 299
System Reset 83
Timer1, Timer2 External Clock 288
Timing Specifications
10-Bit High-Speed ADC 309
10-Bit High-Speed ADC Requirements 310
Auxiliary PLL Clock 284
Capacitive Loading Requirements on Output Pins 282
Constant Current Source 313
DAC 311
DAC Gain Stage to Comparator 312
External Clock Requirements 283
High-Speed ADC Comparator 311
High-Speed PWM Requirements 292
I/O Requirements 286
I2C1 Bus Data Requirements (Master Mode) 306
I2C1 Bus Data Requirements (Slave Mode) 308
Input Capture Requirements 290
Output Compare Requirements 290
PLL Clock 284
Reset, Watchdog Timer, Oscillator Start-up Timer, Power-up Timer and Brown-out Reset Requirements 287
Simple OC/PWM Mode Requirements 291
SPIx Master Mode (Full-Duplex, CKE = 0, CKP = x, SMP = 1) Requirements 296
SPIx Master Mode (Full-Duplex, CKE = 1, CKP = x, SMP = 1) Requirements 295
SPIx Master Mode (Half-Duplex, Transmit Only) Requirements 294
SPIx Maximum Data Clock Rate Summary 293
SPIx Slave Mode (Full-Duplex, CKE = 0, CKP = 0, SMP = 0) Requirements 304
SPIx Slave Mode (Full-Duplex, CKE = 0, CKP = 1, SMP = 0) Requirements 302
SPIx Slave Mode (Full-Duplex, CKE = 1, CKP = 0, SMP = 0) Requirements 298
SPIx Slave Mode (Full-Duplex, CKE = 1, CKP = 1, SMP = 0) Requirements 300
Timer1 External Clock Requirements 288
Timer2 External Clock Requirements 289

U

Universal Asynchronous Receiver Transmitter (UART) 219
Helpful Tips 220
Resources 220
Using the RCON Status Bits 86

V

Voltage Regulator (On-Chip) 256

W

Watchdog Timer (WDT) 251, 257
Watchdog Timer Time-out Reset (WDTO) 85
WWW Address 346
WWW, On-Line Support 11

NOTES:

© 2011-2012 Microchip Technology Inc.

THE MICROCHIP WEB SITE

Microchip provides online support via our WWW site at www.microchip.com. This web site is used as a means to make files and information easily available to customers. Accessible by using your favorite Internet browser, the web site contains the following information:

- **Product Support** – Data sheets and errata, application notes and sample programs, design resources, user's guides and hardware support documents, latest software releases and archived software
- **General Technical Support** – Frequently Asked Questions (FAQs), technical support requests, online discussion groups, Microchip consultant program member listing
- **Business of Microchip** – Product selector and ordering guides, latest Microchip press releases, listing of seminars and events, listings of Microchip sales offices, distributors and factory representatives

CUSTOMER CHANGE NOTIFICATION SERVICE

Microchip's customer notification service helps keep customers current on Microchip products. Subscribers will receive e-mail notification whenever there are changes, updates, revisions or errata related to a specified product family or development tool of interest.

To register, access the Microchip web site at www.microchip.com. Under "Support", click on "Customer Change Notification" and follow the registration instructions.

CUSTOMER SUPPORT

Users of Microchip products can receive assistance through several channels:

- Distributor or Representative
- Local Sales Office
- Field Application Engineer (FAE)
- Technical Support
- Development Systems Information Line

Customers should contact their distributor, representative or field application engineer (FAE) for support. Local sales offices are also available to help customers. A listing of sales offices and locations is included in the back of this document.

Technical support is available through the web site at: http://microchip.com/support

READER RESPONSE

It is our intention to provide you with the best documentation possible to ensure successful use of your Microchip product. If you wish to provide your comments on organization, clarity, subject matter, and ways in which our documentation can better serve you, please FAX your comments to the Technical Publications Manager at (480) 792-4150.

Please list the following information, and use this outline to provide us with your comments about this document.

TO: Technical Publications Manager

RE: Reader Response

Total Pages Sent _____

From: Name _____

Company _____

Address _____

City / State / ZIP / Country _____

Telephone: (_____) _____ - _____ FAX: (_____) _____ - _____

Application (optional):

Would you like a reply? ___Y ___N

Device: dsPIC33FJ06GS001/101A/102A/202A and dsPIC33FJ09GS302

Literature Number: DS75018C

Questions:

1. What are the best features of this document?

_____

_____

2. How does this document meet your hardware and software development needs?

_____

_____

3. Do you find the organization of this document easy to follow? If not, why?

_____

_____

4. What additions to the document do you think would enhance the structure and subject?

_____

_____

5. What deletions from the document could be made without affecting the overall usefulness?

_____

_____

6. Is there any incorrect or misleading information (what and where)?

_____

_____

7. How would you improve this document?

_____

_____

© 2011-2012 Microchip Technology Inc.

PRODUCT IDENTIFICATION SYSTEM

To order or obtain information, e.g., on pricing or delivery, refer to the factory or the listed sales office.

dsPIC 33 FJ 06 GS0 01 T - E / SP - XXX

- **Microchip Trademark**
- **Architecture**
- **Flash Memory Family**
- **Program Memory Size (KB)**
- **Product Group**
- **Pin Count**
- **Tape and Reel Flag (if applicable)**
- **Temperature Range**
- **Package**
- **Pattern**

Architecture:	33	=	16-bit Digital Signal Controller
Flash Memory Family:	FJ	=	Flash program memory, 3.3V
Product Group:	GS0	=	Switch Mode Power Supply (SMPS) family
	GS1	=	Switch Mode Power Supply (SMPS) family
	GS2	=	Switch Mode Power Supply (SMPS) family
	GS3	=	Switch Mode Power Supply (SMPS) family
Pin Count:	01	=	18-pin, 20-pin
	02	=	28-pin, 36-pin
Temperature Range:	I	=	-40°C to+85°C (Industrial)
	E	=	-40°C to+125°C (Extended)
Package:	P	=	Plastic Dual In-line – 300 mil (PDIP)
	SO	=	Plastic Small Outline – Wide – 7.50 mm body (SOIC)
	SS	=	Plastic Shrink Small Outline – 5.30 mm body (SSOP)
	SP	=	Skinny Plastic Dual In-Line – 300 mil body (SPDIP)
	MM	=	Plastic Quad Flat, No Lead Package – 6x6x0.9 mm body (QFN-S)
	TL	=	Very Thin Leadless Array – 5x5x0.9 mm body (VTLA)

Examples:

a) dsPIC33FJ06GS001-I/SS: SMPS dsPIC33, 6-Kbyte program memory, 20-pin, Industrial temp.,SSOP package.

NOTES:

© 2011-2012 Microchip Technology Inc.

Note the following details of the code protection feature on Microchip devices:

- Microchip products meet the specification contained in their particular Microchip Data Sheet.
- Microchip believes that its family of products is one of the most secure families of its kind on the market today, when used in the intended manner and under normal conditions.
- There are dishonest and possibly illegal methods used to breach the code protection feature. All of these methods, to our knowledge, require using the Microchip products in a manner outside the operating specifications contained in Microchip's Data Sheets. Most likely, the person doing so is engaged in theft of intellectual property.
- Microchip is willing to work with the customer who is concerned about the integrity of their code.
- Neither Microchip nor any other semiconductor manufacturer can guarantee the security of their code. Code protection does not mean that we are guaranteeing the product as "unbreakable."

Code protection is constantly evolving. We at Microchip are committed to continuously improving the code protection features of our products. Attempts to break Microchip's code protection feature may be a violation of the Digital Millennium Copyright Act. If such acts allow unauthorized access to your software or other copyrighted work, you may have a right to sue for relief under that Act.

Information contained in this publication regarding device applications and the like is provided only for your convenience and may be superseded by updates. It is your responsibility to ensure that your application meets with your specifications. MICROCHIP MAKES NO REPRESENTATIONS OR WARRANTIES OF ANY KIND WHETHER EXPRESS OR IMPLIED, WRITTEN OR ORAL, STATUTORY OR OTHERWISE, RELATED TO THE INFORMATION, INCLUDING BUT NOT LIMITED TO ITS CONDITION, QUALITY, PERFORMANCE, MERCHANTABILITY OR FITNESS FOR PURPOSE**.** Microchip disclaims all liability arising from this information and its use. Use of Microchip devices in life support and/or safety applications is entirely at the buyer's risk, and the buyer agrees to defend, indemnify and hold harmless Microchip from any and all damages, claims, suits, or expenses resulting from such use. No licenses are conveyed, implicitly or otherwise, under any Microchip intellectual property rights.

QUALITY MANAGEMENT SYSTEM
CERTIFIED BY DNV
═ ISO/TS 16949 ═

Trademarks

The Microchip name and logo, the Microchip logo, dsPIC, KEELOQ, KEELOQ logo, MPLAB, PIC, PICmicro, PICSTART, PIC32 logo, rfPIC and UNI/O are registered trademarks of Microchip Technology Incorporated in the U.S.A. and other countries.

FilterLab, Hampshire, HI-TECH C, Linear Active Thermistor, MXDEV, MXLAB, SEEVAL and The Embedded Control Solutions Company are registered trademarks of Microchip Technology Incorporated in the U.S.A.

Analog-for-the-Digital Age, Application Maestro, BodyCom, chipKIT, chipKIT logo, CodeGuard, dsPICDEM, dsPICDEM.net, dsPICworks, dsSPEAK, ECAN, ECONOMONITOR, FanSense, HI-TIDE, In-Circuit Serial Programming, ICSP, Mindi, MiWi, MPASM, MPLAB Certified logo, MPLIB, MPLINK, mTouch, Omniscient Code Generation, PICC, PICC-18, PICDEM, PICDEM.net, PICkit, PICtail, REAL ICE, rfLAB, Select Mode, Total Endurance, TSHARC, UniWinDriver, WiperLock and ZENA are trademarks of Microchip Technology Incorporated in the U.S.A. and other countries.

SQTP is a service mark of Microchip Technology Incorporated in the U.S.A.

All other trademarks mentioned herein are property of their respective companies.

© 2011-2012, Microchip Technology Incorporated, Printed in the U.S.A., All Rights Reserved.

Printed on recycled paper.

ISBN: 978-1-62076-494-7

Microchip received ISO/TS-16949:2009 certification for its worldwide headquarters, design and wafer fabrication facilities in Chandler and Tempe, Arizona; Gresham, Oregon and design centers in California and India. The Company's quality system processes and procedures are for its PIC® MCUs and dsPIC® DSCs, KEELOQ® code hopping devices, Serial EEPROMs, microperipherals, nonvolatile memory and analog products. In addition, Microchip's quality system for the design and manufacture of development systems is ISO 9001:2000 certified.

Worldwide Sales and Service

AMERICAS

Corporate Office
2355 West Chandler Blvd.
Chandler, AZ 85224-6199
Tel: 480-792-7200
Fax: 480-792-7277
Technical Support:
http://www.microchip.com/support
Web Address:
www.microchip.com

Atlanta
Duluth, GA
Tel: 678-957-9614
Fax: 678-957-1455

Boston
Westborough, MA
Tel: 774-760-0087
Fax: 774-760-0088

Chicago
Itasca, IL
Tel: 630-285-0071
Fax: 630-285-0075

Cleveland
Independence, OH
Tel: 216-447-0464
Fax: 216-447-0643

Dallas
Addison, TX
Tel: 972-818-7423
Fax: 972-818-2924

Detroit
Farmington Hills, MI
Tel: 248-538-2250
Fax: 248-538-2260

Indianapolis
Noblesville, IN
Tel: 317-773-8323
Fax: 317-773-5453

Los Angeles
Mission Viejo, CA
Tel: 949-462-9523
Fax: 949-462-9608

Santa Clara
Santa Clara, CA
Tel: 408-961-6444
Fax: 408-961-6445

Toronto
Mississauga, Ontario, Canada
Tel: 905-673-0699
Fax: 905-673-6509

ASIA/PACIFIC

Asia Pacific Office
Suites 3707-14, 37th Floor
Tower 6, The Gateway
Harbour City, Kowloon
Hong Kong
Tel: 852-2401-1200
Fax: 852-2401-3431

Australia - Sydney
Tel: 61-2-9868-6733
Fax: 61-2-9868-6755

China - Beijing
Tel: 86-10-8569-7000
Fax: 86-10-8528-2104

China - Chengdu
Tel: 86-28-8665-5511
Fax: 86-28-8665-7889

China - Chongqing
Tel: 86-23-8980-9588
Fax: 86-23-8980-9500

China - Hangzhou
Tel: 86-571-2819-3187
Fax: 86-571-2819-3189

China - Hong Kong SAR
Tel: 852-2401-1200
Fax: 852-2401-3431

China - Nanjing
Tel: 86-25-8473-2460
Fax: 86-25-8473-2470

China - Qingdao
Tel: 86-532-8502-7355
Fax: 86-532-8502-7205

China - Shanghai
Tel: 86-21-5407-5533
Fax: 86-21-5407-5066

China - Shenyang
Tel: 86-24-2334-2829
Fax: 86-24-2334-2393

China - Shenzhen
Tel: 86-755-8203-2660
Fax: 86-755-8203-1760

China - Wuhan
Tel: 86-27-5980-5300
Fax: 86-27-5980-5118

China - Xian
Tel: 86-29-8833-7252
Fax: 86-29-8833-7256

China - Xiamen
Tel: 86-592-2388138
Fax: 86-592-2388130

China - Zhuhai
Tel: 86-756-3210040
Fax: 86-756-3210049

ASIA/PACIFIC

India - Bangalore
Tel: 91-80-3090-4444
Fax: 91-80-3090-4123

India - New Delhi
Tel: 91-11-4160-8631
Fax: 91-11-4160-8632

India - Pune
Tel: 91-20-2566-1512
Fax: 91-20-2566-1513

Japan - Osaka
Tel: 81-66-152-7160
Fax: 81-66-152-9310

Japan - Yokohama
Tel: 81-45-471- 6166
Fax: 81-45-471-6122

Korea - Daegu
Tel: 82-53-744-4301
Fax: 82-53-744-4302

Korea - Seoul
Tel: 82-2-554-7200
Fax: 82-2-558-5932 or
82-2-558-5934

Malaysia - Kuala Lumpur
Tel: 60-3-6201-9857
Fax: 60-3-6201-9859

Malaysia - Penang
Tel: 60-4-227-8870
Fax: 60-4-227-4068

Philippines - Manila
Tel: 63-2-634-9065
Fax: 63-2-634-9069

Singapore
Tel: 65-6334-8870
Fax: 65-6334-8850

Taiwan - Hsin Chu
Tel: 886-3-5778-366
Fax: 886-3-5770-955

Taiwan - Kaohsiung
Tel: 886-7-536-4818
Fax: 886-7-330-9305

Taiwan - Taipei
Tel: 886-2-2500-6610
Fax: 886-2-2508-0102

Thailand - Bangkok
Tel: 66-2-694-1351
Fax: 66-2-694-1350

EUROPE

Austria - Wels
Tel: 43-7242-2244-39
Fax: 43-7242-2244-393

Denmark - Copenhagen
Tel: 45-4450-2828
Fax: 45-4485-2829

France - Paris
Tel: 33-1-69-53-63-20
Fax: 33-1-69-30-90-79

Germany - Munich
Tel: 49-89-627-144-0
Fax: 49-89-627-144-44

Italy - Milan
Tel: 39-0331-742611
Fax: 39-0331-466781

Netherlands - Drunen
Tel: 31-416-690399
Fax: 31-416-690340

Spain - Madrid
Tel: 34-91-708-08-90
Fax: 34-91-708-08-91

UK - Wokingham
Tel: 44-118-921-5869
Fax: 44-118-921-5820

11/29/11

© 2011-2012 Microchip Technology Inc.

Мы молодая и активно развивающаяся компания в области поставок электронных компонентов. Мы поставляем электронные компоненты отечественного и импортного производства напрямую от производителей и с крупнейших складов мира.

Благодаря сотрудничеству с мировыми поставщиками мы осуществляем комплексные и плановые поставки широчайшего спектра электронных компонентов.

Собственная эффективная логистика и склад в обеспечивает надежную поставку продукции в точно указанные сроки по всей России.

Мы осуществляем техническую поддержку нашим клиентам и предпродажную проверку качества продукции. На все поставляемые продукты мы предоставляем гарантию .

Осуществляем поставки продукции под контролем ВП МО РФ на предприятия военно-промышленного комплекса России , а также работаем в рамках 275 ФЗ с открытием отдельных счетов в уполномоченном банке. Система менеджмента качества компании соответствует требованиям ГОСТ ISO 9001.

Минимальные сроки поставки, гибкие цены, неограниченный ассортимент и индивидуальный подход к клиентам являются основой для выстраивания долгосрочного и эффективного сотрудничества с предприятиями радиоэлектронной промышленности, предприятиями ВПК и научно-исследовательскими институтами России.

С нами вы становитесь еще успешнее!

Наши контакты:

Телефон: +7 812 627 14 35

Электронная почта: sales@st-electron.ru

Адрес: 198099, Санкт-Петербург, Промышленная ул, дом № 19, литера Н, помещение 100-Н Офис 331