HMC807LP6CE

v03.0411

FRACTIONAL-N PLL WITH INTEGRATED VCO, 12.4 - 13.4 GHz

Features

- RF Bandwidth: 12.4 GHz to 13.4 GHz
- Fractional or Integer Modes
- Ultra Low Phase Noise
  12.9 GHz; 50 MHz Ref.
  -95 / -98 dBc/Hz @ 10 kHz (Frac / Int)
  -132 dBc/Hz @ 1 MHz (Open Loop)
- Figure of Merit (FOM)
  -221 / -226 dBc/Hz (Frac / Int)
- 24-bit Step Size, Resolution 3 Hz typ
- 225 MHz, 14-bit reference path input
- Direct FSK Modulation Mode
- Cycle Slip Prevention
- Read / Write Serial Port, Chip ID
- 40 Lead 6 x 6 mm SMT Package: 36 mm²

Typical Applications

- VSAT Radio
- Point-to-Point / Multi-Point Radio
- Test Equipment & Industrial Control
- Military End-Use
- Phased Array Applications

Functional Diagram

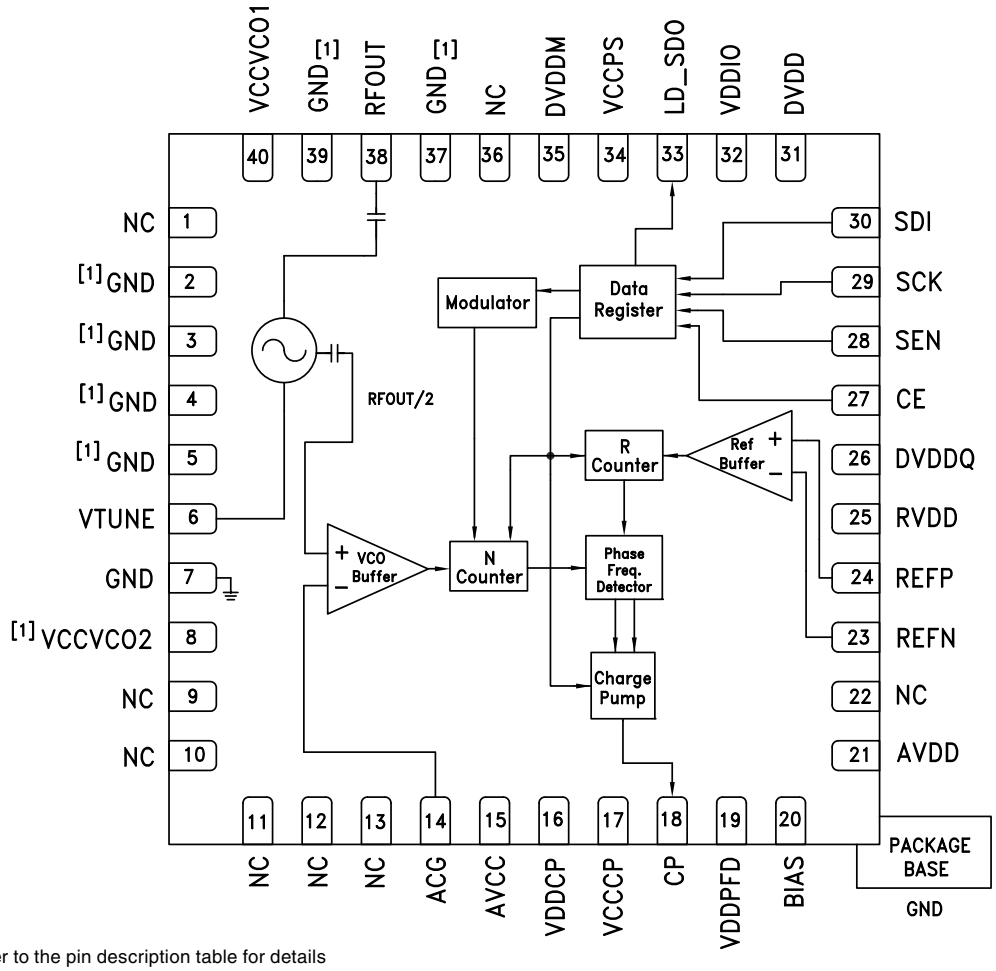

[1] Please refer to the pin description table for details

Information furnished by Analog Devices is believed to be accurate and reliable. However, no responsibility is assumed by Analog Devices for its use, nor for any infringements of patents or other rights of third parties that may result from its use. Specifications subject to change without notice. No license is granted by implication or otherwise under any patent or patent rights of Analog Devices. Trademarks and registered trademarks are the property of their respective owners.

For price, delivery, and to place orders: Analog Devices, Inc., One Technology Way, P.O. Box 9106, Norwood, MA 02062-9106
Phone: 781-329-4700 • Order online at www.analog.com
Application Support: Phone: 1-800-ANALOG-D

FRACTIONAL-N PLL WITH INTEGRATED VCO, 12.4 - 13.4 GHz

General Description

The HMC807LP6CE is a fully functioned Fractional-N Phase-Locked-Loop (PLL) with an Integrated Voltage Controlled Oscillator (VCO). The input reference frequency range is 100 kHz to 220 MHz while the advanced delta-sigma modulator design in the fractional PLL allows both ultra-fine step sizes and very low spurious products. The highly integrated structure provides excellent phase noise performance over temperature, shock and process. The HMC807LP6CE is packaged in a leadless QFN 6 x 6 mm surface mount package. The output power is 8 dBm typical, making the HMC807LP6CE ideal for driving the LO port of many of Hittite's Hi Linearity and I/Q mixer products.

For theory of operation and register map refer to the "PLLs w/ Integrated VCO - Microwave VCOs" Operating Guide. To view the Operating Guide, please visit www.hittite.com and choose HMC807LP6CE from the "Search by Part Number" pull down menu.

Electrical Specifications, T_A = +25° C; VCCVCO, VDDCP, VCCCP = +5V; AVCC, VCCPS VDDPFD, AVDD, RVDD, DVDD, DVDDM, DVDDQ, VDDIO = +3.3V; AGND = DGND = 0V

Parameter	Condition	Min.	Typ.	Max.	Units
RF Output Characteristics					
VCO Output Frequency Range		12.4	12.9	13.4	GHz
VCO Output Power		4	8	10	dBm
VCO Tuning Voltage		2		13	V
VCO Tuning Sensitivity	V_{TUNE} = +5V		190		MHz/V
Frequency Pulling (into a 2:1 VSWR)			5		MHz pp
Frequency Pushing	V_{TUNE} = +5V		6		MHz/V
Frequency Drift Rate			1.2		MHz/°C
Sub Harmonic (1/2)			25		dBc
Harmonic (2nd)			18		dBc
Harmonic (3rd)			35		dBc
VCO SSB Phase Noise @ 100 kHz Offset (Open Loop)	V_{TUNE} = +5V Fvco = 12.9 GHz		-110		dBc/Hz
Synthesizer In-Band SSB Phase Noise @ 10 kHz Offset (Frac/Int)	Fref = 50 MHz Fvco = 12.9 GHz Loop BW = 100 kHz		-95 / -98		dBc/Hz
Synthesizer Normalized In-Band SSB Phase Noise Floor (Frac/Int)			-221 / -226		dBc/Hz
Synthesizer Fractional Spurs [1]			-65		dBc
Synthesizer Frequency Settling Time (100 MHz Step)	From 13 GHz to 12.9 GHz Loop BW = 100 kHz		104		µs
16-Bit Divider Range (Int)	N Divider Ratio 2^{16}+31	32		65567	
16-Bit Divider Range (Frac)	N Divider Ratio 2^{16}-1	36		65535	
REF Input Characteristics					
Max Ref Input Frequency (3.3V)		200	225		MHz
Min Ref Input Frequency			100	200	kHz
Ref Input Sensitivity	AC Coupled		500	700	mV_{pp}
Max Ref Input	DC Coupled	0		VDDIO	V
Ref Input Capacitance				5	pF
14-Bit Ref Divider Range		16383		1	

[1] Actual spur level is dependent on loop parameters and will increase at division ratios closest to integer boundaries. Number listed is average value.

Information furnished by Analog Devices is believed to be accurate and reliable. However, no responsibility is assumed by Analog Devices for its use, nor for any infringements of patents or other rights of third parties that may result from its use. Specifications subject to change without notice. No license is granted by implication or otherwise under any patent or patent rights of Analog Devices. Trademarks and registered trademarks are the property of their respective owners.

For price, delivery, and to place orders: Analog Devices, Inc., One Technology Way, P.O. Box 9106, Norwood, MA 02062-9106
Phone: 781-329-4700 • Order online at www.analog.com
Application Support: Phone: 1-800-ANALOG-D

RoHS EARTH FRIENDLY

FRACTIONAL-N PLL WITH INTEGRATED VCO, 12.4 - 13.4 GHz

Electrical Specifications *(Continued)*

Parameter	Condition	Min.	Typ.	Max.	Units
Phase Detector					
Max Phase Detector Frequency (Frac)		70	105		MHz
Max Phase Detector Frequency (Int)		140	160		MHz
Min Phase Detector Frequency				100	kHz
Charge Pump					
Max Output Current			2		mA
Min Output Current			500		µA
Charge Pump Noise	Input referred 50 MHz Ref.		-145		dBc/Hz
Logic Inputs					
VIH Input High Voltage		VDDIO-0.4		VDDIO	V
VIL Input Low Voltage		0		0.4	V
Logic Outputs					
VOH Output High Voltage		VDDIO-0.4		VDDIO	V
VOL Output Low Voltage		0		0.4	V
Serial Port Max Clock			50		MHz
Power Supply Voltages					
Analog 3.3V Supplies: AVCC, VDDPFD, AVDD, RVDD, VCCPS	AVDD must equal DVDD	3	3.3	3.45	V
Digital Internal Supplies: DVDD, DVDDQ, DVDDM		3	3.3	3.45	V
Digital I/O Supplies: VDDIO	Logic I/O	1.8	3.3	5.5	V
Analog 5V Supplies: VCCVCO, VDDCP, VCCCP	VCCCP must equal VDDCP	4.75	5	5.25	V
Power Supply Currents					
Total Current Consumption (5V)			205	250	mA
Total Current Consumption (3.3V)			90	110	mA
Power Down Current [1]	CSP Disabled		1	10	µA
	CSP Enabled		450		µA
Bias Reference Voltage	Measured with 10 GΩ meter	1.880	1.920	1.960	V

[1] Refers only to the Synthesizer portion of the HMC807LP6CE

Information furnished by Analog Devices is believed to be accurate and reliable. However, no responsibility is assumed by Analog Devices for its use, nor for any infringements of patents or other rights of third parties that may result from its use. Specifications subject to change without notice. No license is granted by implication or otherwise under any patent or patent rights of Analog Devices. Trademarks and registered trademarks are the property of their respective owners.

For price, delivery, and to place orders: Analog Devices, Inc., One Technology Way, P.O. Box 9106, Norwood, MA 02062-9106
Phone: 781-329-4700 • Order online at www.analog.com
Application Support: Phone: 1-800-ANALOG-D

FRACTIONAL-N PLL WITH INTEGRATED VCO, 12.4 - 13.4 GHz

SSB Phase Noise vs. Frequency, Integer Mode

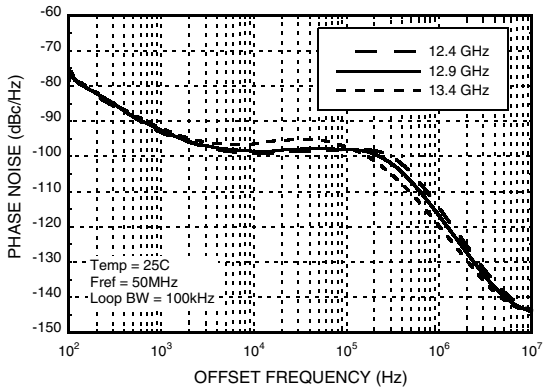

SSB Phase Noise vs. Temperature @ 12.9 GHz, Integer Mode

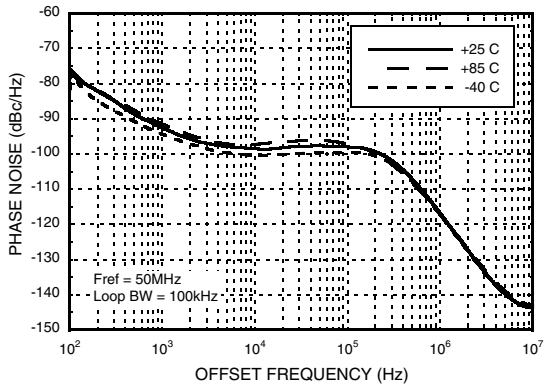

SSB Phase Noise Fractional Spurs @ 12.902 GHz

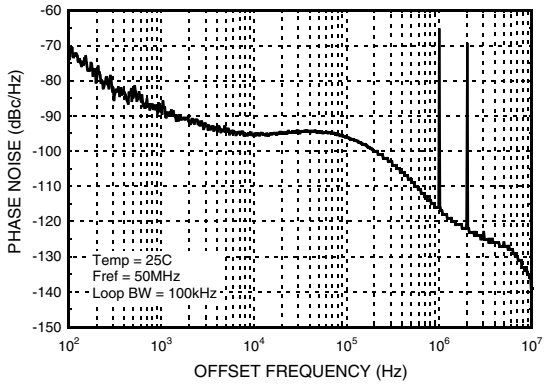

SSB Phase Noise vs. Reference Freq. & Loop BW @ 12.9 GHz, Integer Mode

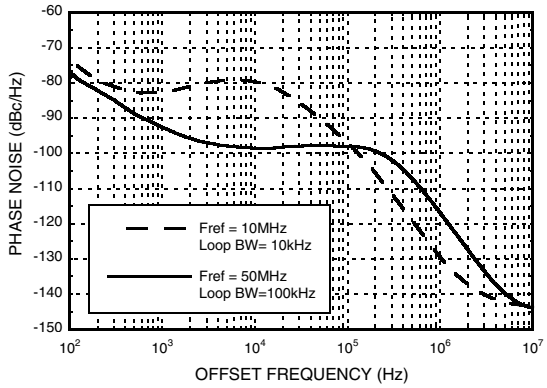

Example of Cycle Slip Prevention Hop from 13.2 to 12.7 GHz

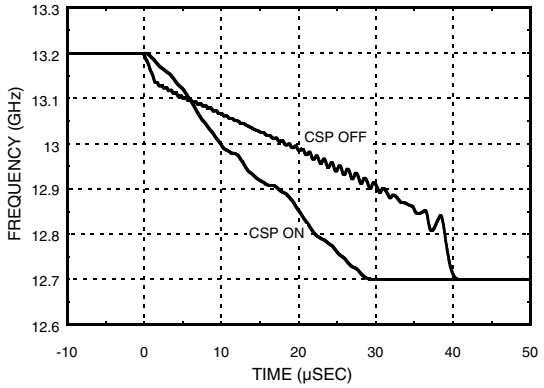

Typical Reference Sensitivity vs. Frequency, 3.3V [1]

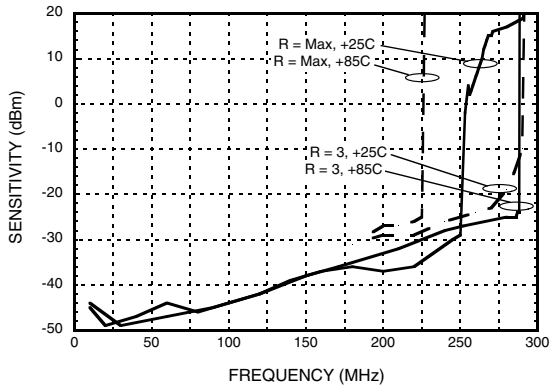

[1] R refers to the reference path division ratio

Information furnished by Analog Devices is believed to be accurate and reliable. However, no responsibility is assumed by Analog Devices for its use, nor for any infringements of patents or other rights of third parties that may result from its use. Specifications subject to change without notice. No license is granted by implication or otherwise under any patent or patent rights of Analog Devices. Trademarks and registered trademarks are the property of their respective owners.

For price, delivery, and to place orders: Analog Devices, Inc., One Technology Way, P.O. Box 9106, Norwood, MA 02062-9106
Phone: 781-329-4700 • Order online at www.analog.com
Application Support: Phone: 1-800-ANALOG-D

FRACTIONAL-N PLL WITH INTEGRATED VCO, 12.4 - 13.4 GHz

Frequency vs. Tuning Voltage, T = 25°C

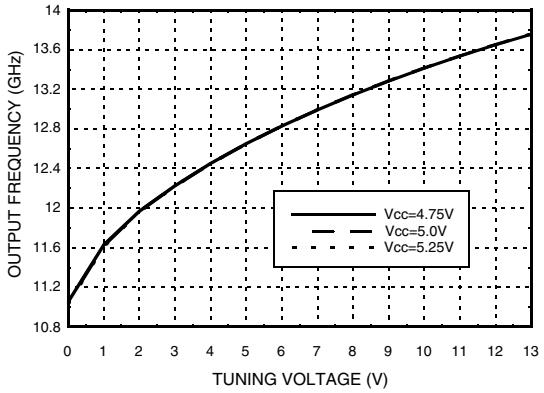

Frequency vs. Tuning Voltage, Vcc = +5V

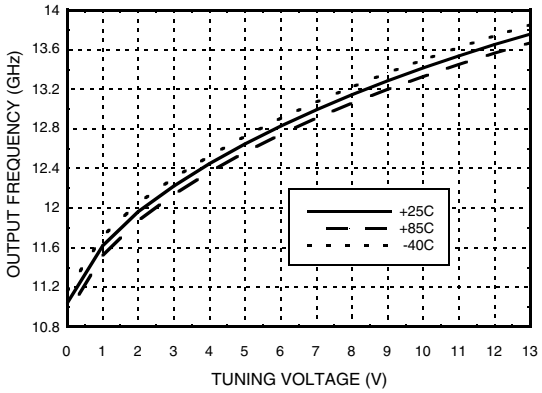

Sensitivity vs. Tuning Voltage, Vcc = +5V

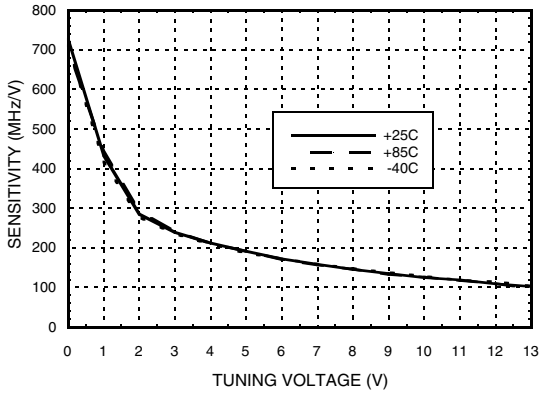

Output Power vs. Tuning Voltage, Vcc = +5V

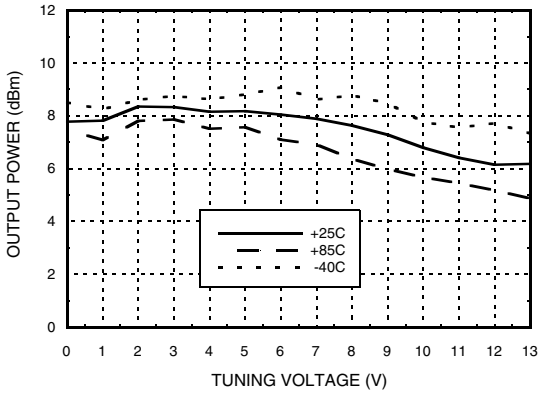

Open Loop VCO SSB Phase Noise @ Vtune = +5V

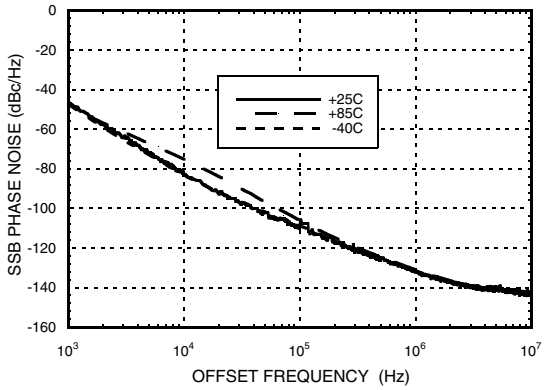

Open Loop VCO SSB Phase Noise vs. Tuning Voltage

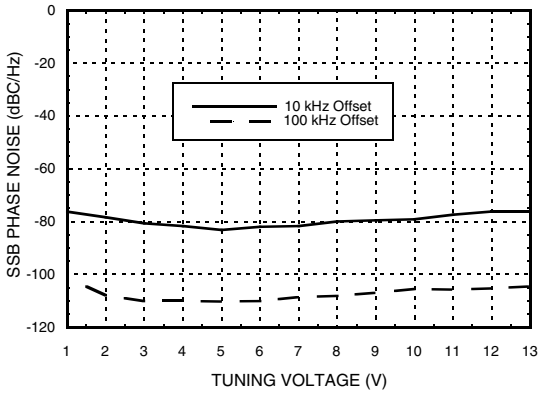

Information furnished by Analog Devices is believed to be accurate and reliable. However, no responsibility is assumed by Analog Devices for its use, nor for any infringements of patents or other rights of third parties that may result from its use. Specifications subject to change without notice. No license is granted by implication or otherwise under any patent or patent rights of Analog Devices. Trademarks and registered trademarks are the property of their respective owners.

For price, delivery, and to place orders: Analog Devices, Inc., One Technology Way, P.O. Box 9106, Norwood, MA 02062-9106
Phone: 781-329-4700 • Order online at www.analog.com
Application Support: Phone: 1-800-ANALOG-D

Pin Descriptions

Pin Number	Function	Description
1, 9 - 13, 22, 36	N/C	No Connection. These pins may be connected to RF/DC ground. Performance will not be affected.
2 - 4, 7, 37, 39	GND [1]	These pins must be connected to RF/DC Ground
5	GND	These pins and package bottom must be connected to RF/DC Ground
8	VCCVCO2 [2]	+5V Power Supply for VCO
40	VCCVCO1	
6	VTUNE	Control Voltage Input. Modulation port bandwidth dependent on drive source impedance.
14	ACG	AC Ground. This pin must be connected to an external capacitor to ground.
15	AVCC	Analog Power supply pin for the RF Section. A decoupling capacitor to the ground plane should be placed as close as possible to this pin. Nominally 3.3V
16	VDDCP	+5V Power Supply for charge pump digital section
17	VCCCP	+5V Power Supply for the charge pump analog section
18	CP	Charge pump output
19	VDDPFD	Analog Power supply for the phase frequency detector, Nominally 3.3V
20	BIAS [3]	External bypass decoupling for precision bias circuits, 1.920V ±20 mV is generated internally
21	AVDD	Analog Power supply for analog ref paths, Nominally 3.3V
23	REFN	Reference input (Negative or AC coupled to GND)
24	REFP	Reference input (Positive)
25	RVDD	Ref path supply
26	DVDDQ	Digital supply for Substrate, Nominally 3.3V
27	CE	Chip Enable
28	SEN	Serial port latch enable input
29	SCK	Serial port clock input
30	SDI	Serial port data input
31	DVDD	Power supply pin for internal digital circuitry. Nominally 3.3V
32	VDDIO	Power Supply for digital I/O driver
33	LD_SDO	Lock Detect, Main Serial Data Output or VCO Serial Port Data Out
34	VCCPS	Analog Power Supply for Prescaler, Nominally 3.3V
35	DVDDM	Digital Power Supply for M-Counter, Nominally 3.3V
38	RFOUT	RF output (AC coupled).

[1] This pin is not connected internally, however, this pin must be connected to GND to maintain product family pin for pin compatibility.

[2] This pin is not connected internally, however, this pin must be connected to Vcc to maintain product family pin for pin compatibility.

[3] BIAS ref voltage (pin 20) cannot drive an external load, and must be measured with a 10 GOhm meter such as Agilent 34410A; a typical 10 Mohm DVM will read erroneously.

Information furnished by Analog Devices is believed to be accurate and reliable. However, no responsibility is assumed by Analog Devices for its use, nor for any infringements of patents or other rights of third parties that may result from its use. Specifications subject to change without notice. No license is granted by implication or otherwise under any patent or patent rights of Analog Devices. Trademarks and registered trademarks are the property of their respective owners.

For price, delivery, and to place orders: Analog Devices, Inc., One Technology Way, P.O. Box 9106, Norwood, MA 02062-9106
Phone: 781-329-4700 • Order online at www.analog.com
Application Support: Phone: 1-800-ANALOG-D

Pin Schematic Equivalents

Pins	Equivalent Schematic
RFOUT	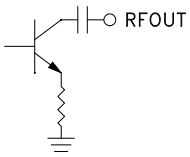
VCCVCO1	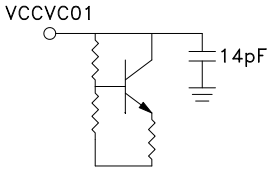
VTUNE	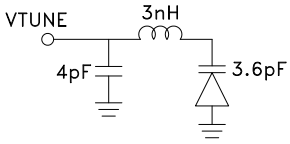
GND	
SEN, CE, SCK, SDI	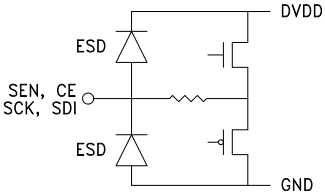
LD_SDO	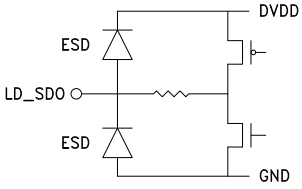
CP	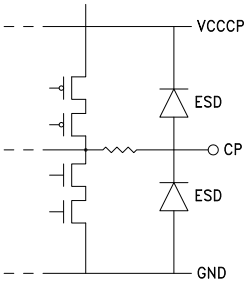

Information furnished by Analog Devices is believed to be accurate and reliable. However, no responsibility is assumed by Analog Devices for its use, nor for any infringements of patents or other rights of third parties that may result from its use. Specifications subject to change without notice. No license is granted by implication or otherwise under any patent or patent rights of Analog Devices. Trademarks and registered trademarks are the property of their respective owners.

For price, delivery, and to place orders: Analog Devices, Inc., One Technology Way, P.O. Box 9106, Norwood, MA 02062-9106
Phone: 781-329-4700 • Order online at www.analog.com
Application Support: Phone: 1-800-ANALOG-D

Pin Schematic Equivalents *(Continued)*

Pins	Equivalent Schematic
Bias	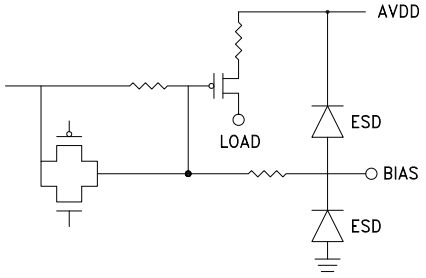
REFN, REFP	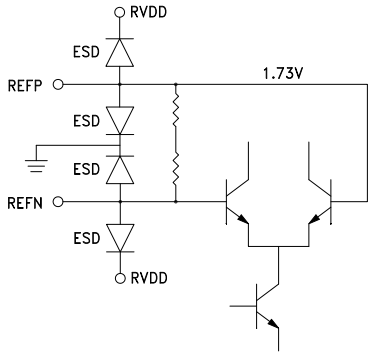

Information furnished by Analog Devices is believed to be accurate and reliable. However, no responsibility is assumed by Analog Devices for its use, nor for any infringements of patents or other rights of third parties that may result from its use. Specifications subject to change without notice. No license is granted by implication or otherwise under any patent or patent rights of Analog Devices. Trademarks and registered trademarks are the property of their respective owners.

For price, delivery, and to place orders: Analog Devices, Inc., One Technology Way, P.O. Box 9106, Norwood, MA 02062-9106
Phone: 781-329-4700 • Order online at www.analog.com
Application Support: Phone: 1-800-ANALOG-D

Evaluation Circuit

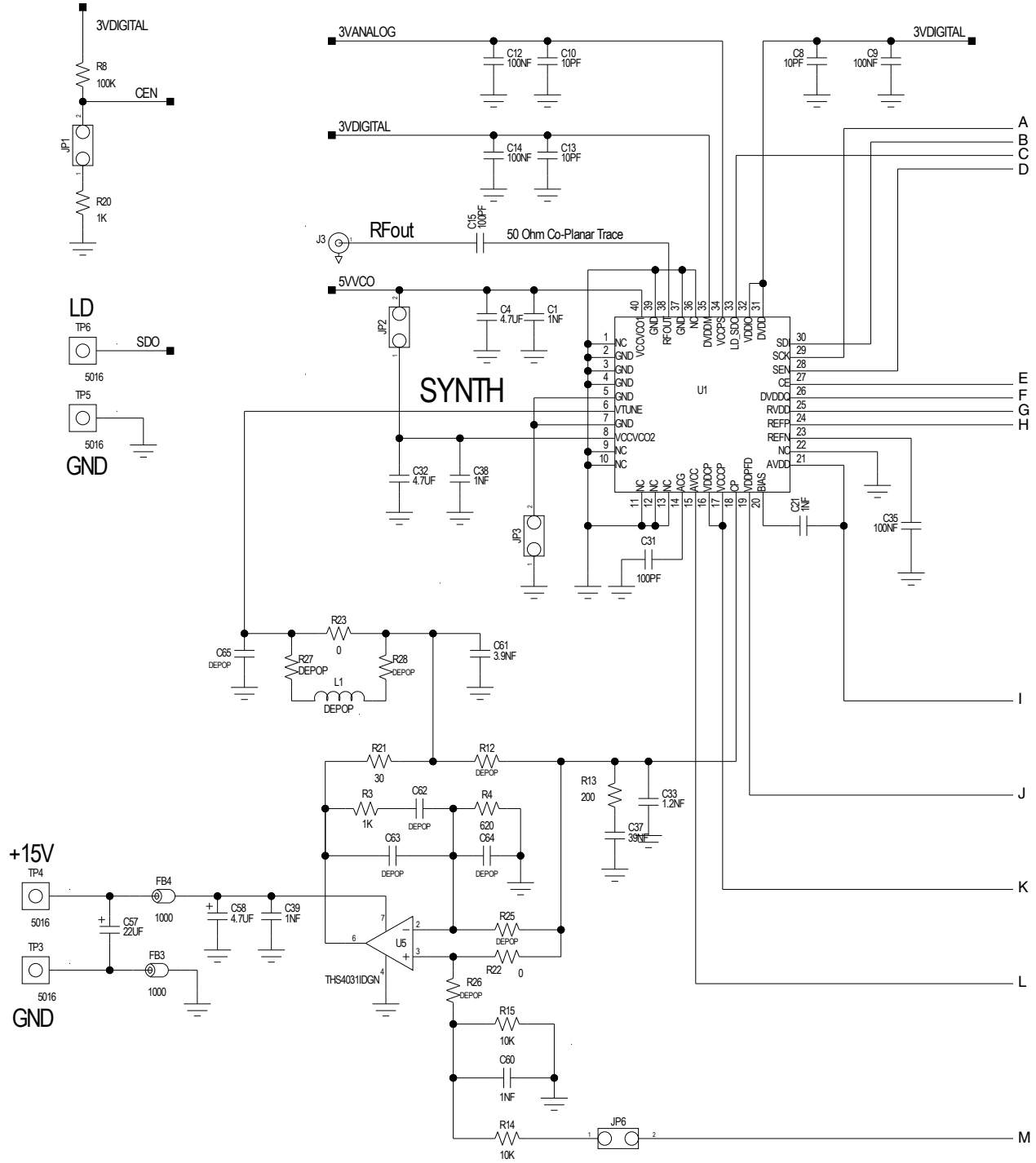

Information furnished by Analog Devices is believed to be accurate and reliable. However, no responsibility is assumed by Analog Devices for its use, nor for any infringements of patents or other rights of third parties that may result from its use. Specifications subject to change without notice. No license is granted by implication or otherwise under any patent or patent rights of Analog Devices. Trademarks and registered trademarks are the property of their respective owners.

For price, delivery, and to place orders: Analog Devices, Inc., One Technology Way, P.O. Box 9106, Norwood, MA 02062-9106
Phone: 781-329-4700 • Order online at www.analog.com
Application Support: Phone: 1-800-ANALOG-D

Evaluation Circuit (Continued from page 9)

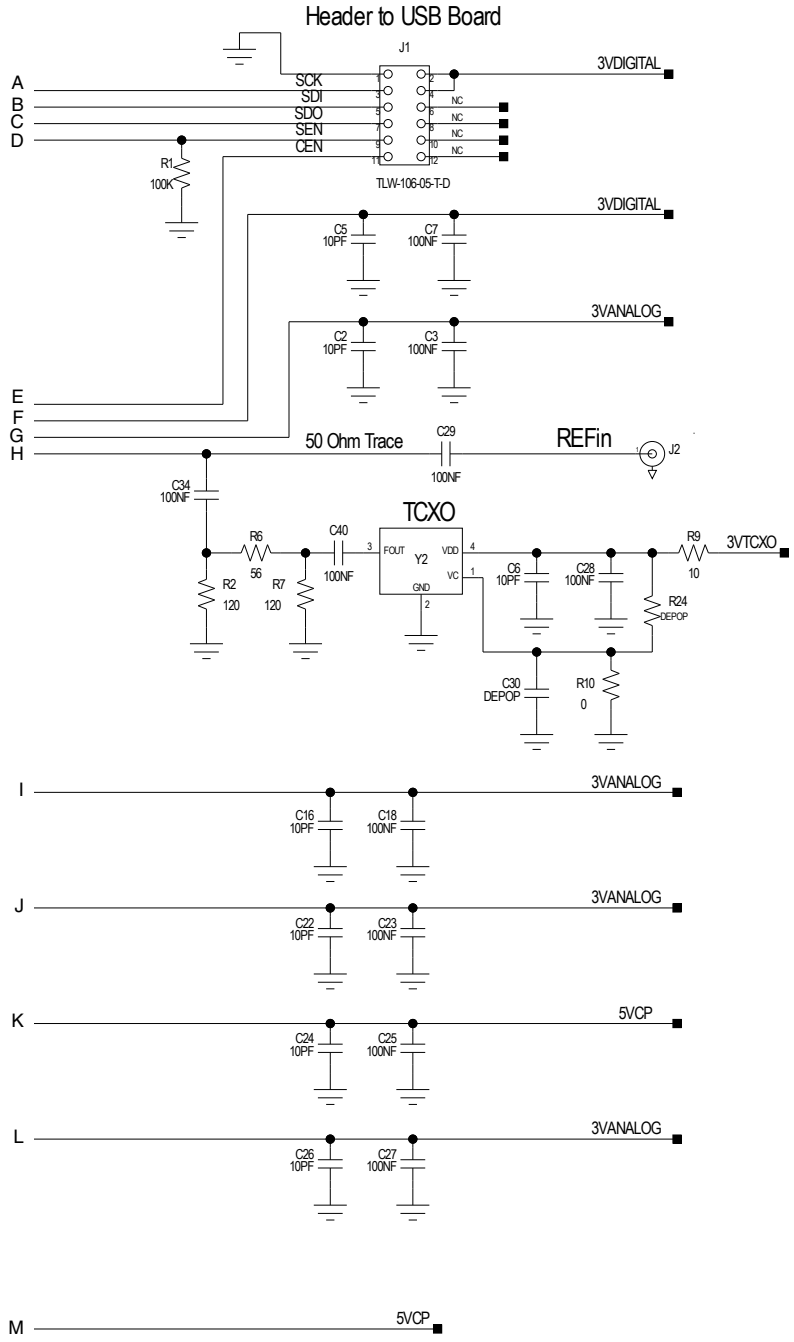

Information furnished by Analog Devices is believed to be accurate and reliable. However, no responsibility is assumed by Analog Devices for its use, nor for any infringements of patents or other rights of third parties that may result from its use. Specifications subject to change without notice. No license is granted by implication or otherwise under any patent or patent rights of Analog Devices. Trademarks and registered trademarks are the property of their respective owners.

For price, delivery, and to place orders: Analog Devices, Inc., One Technology Way, P.O. Box 9106, Norwood, MA 02062-9106
Phone: 781-329-4700 • Order online at www.analog.com
Application Support: Phone: 1-800-ANALOG-D

Evaluation Circuit *(Continued from page 10)*

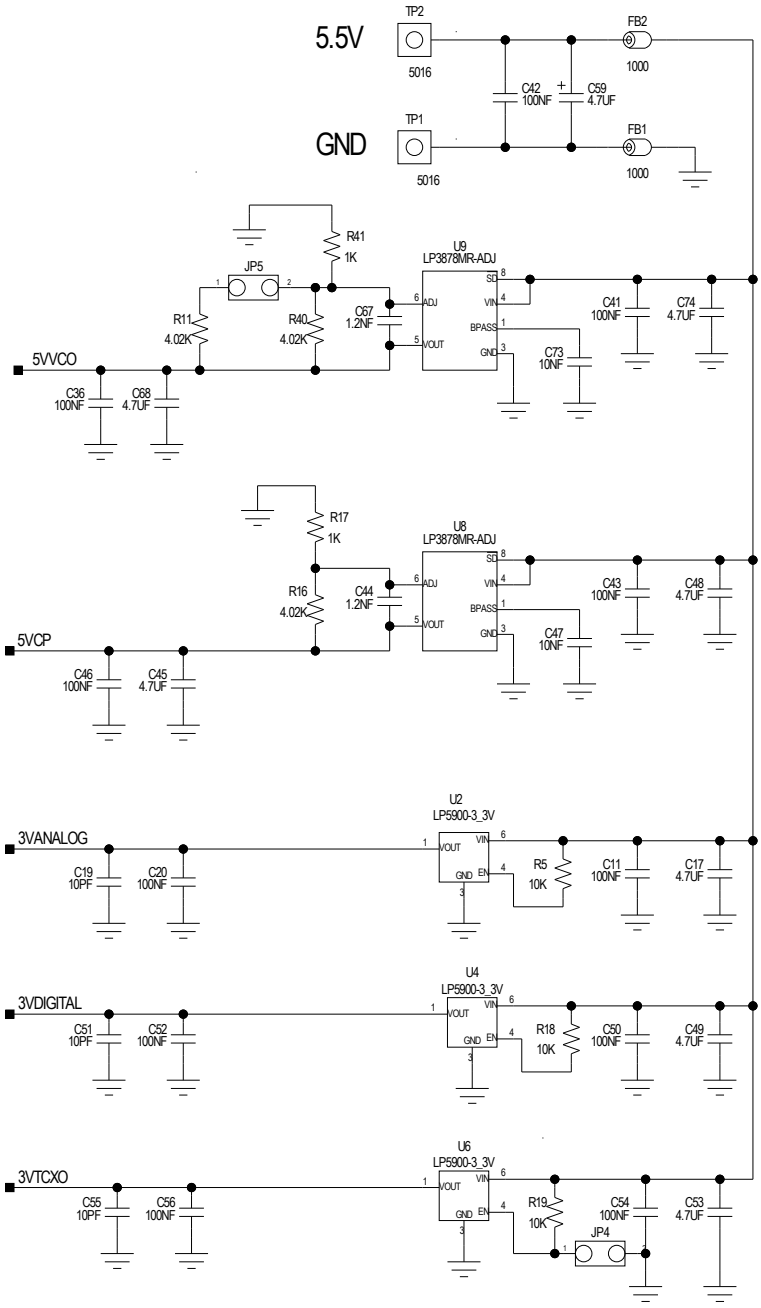

Information furnished by Analog Devices is believed to be accurate and reliable. However, no responsibility is assumed by Analog Devices for its use, nor for any infringements of patents or other rights of third parties that may result from its use. Specifications subject to change without notice. No license is granted by implication or otherwise under any patent or patent rights of Analog Devices. Trademarks and registered trademarks are the property of their respective owners.

For price, delivery, and to place orders: Analog Devices, Inc., One Technology Way, P.O. Box 9106, Norwood, MA 02062-9106
Phone: 781-329-4700 • Order online at www.analog.com
Application Support: Phone: 1-800-ANALOG-D

FRACTIONAL-N PLL WITH INTEGRATED VCO, 12.4 - 13.4 GHz

Absolute Maximum Ratings

Nominal 3.3V Supplies to GND	-0.3V to +3.6V
Nominal Digital Supply to 3.3V Analog Supply	-0.3V to +0.3V
Nominal 5V Supply to GND	-0.3 to +5.5V
Vtune	0 to +15V
Storage Temperature	-65 to +150°C
Max Peak Reflow Temperature	260 °C
ESD Rating	Class 1A

Reliability Information

Junction Temperature to Maintain 1 Million Hour MTTF	135 °C
Nominal Junction Temperature (T=85 °C)	120 °C
Thermal Resistance (Junction to GND Paddle, 5V Supply)	34.2 °C/W
Operating Temperature	-40 to +85°C

Outline Drawing

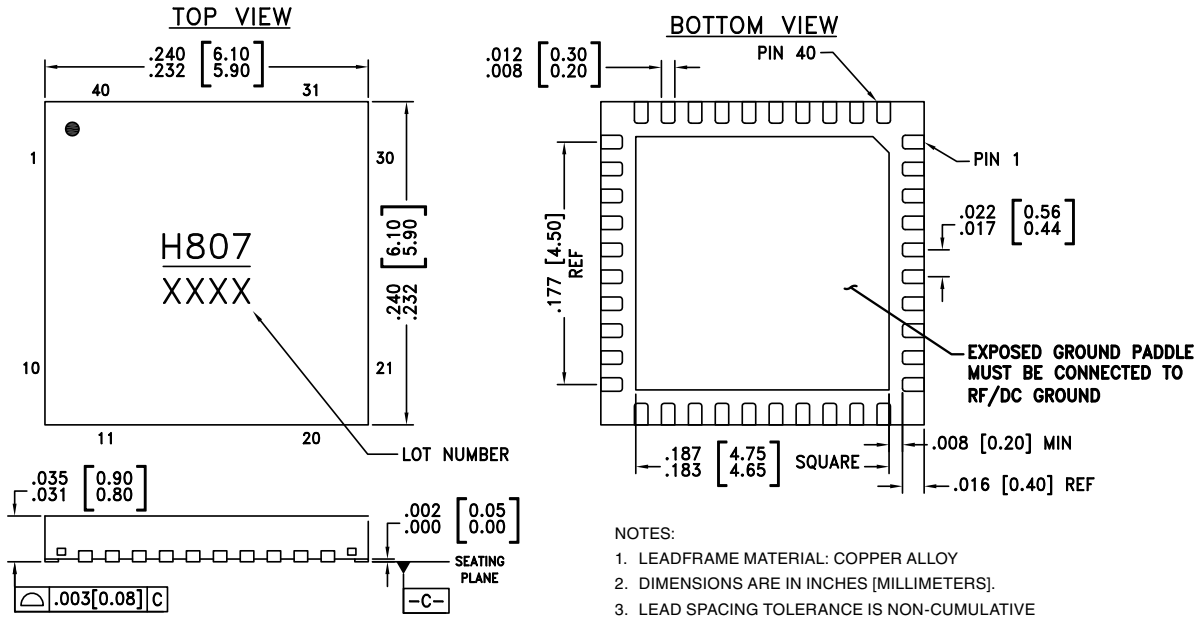

NOTES:
1. LEADFRAME MATERIAL: COPPER ALLOY
2. DIMENSIONS ARE IN INCHES [MILLIMETERS].
3. LEAD SPACING TOLERANCE IS NON-CUMULATIVE
4. PAD BURR LENGTH SHALL BE 0.15 mm MAXIMUM. PAD BURR HEIGHT SHALL BE 0.05 mm MAXIMUM.
5. PACKAGE WARP SHALL NOT EXCEED 0.05 mm.
6. ALL GROUND LEADS AND GROUND PADDLE MUST BE SOLDERED TO PCB RF GROUND.
7. REFER TO HITTITE APPLICATION NOTE FOR SUGGESTED PCB LAND PATTERN.

Package Information

Part Number	Package Body Material	Lead Finish	MSL Rating	Package Marking [1]
HMC807LP6CE	RoHS-compliant Low Stress Injection Molded Plastic	100% matte Sn	MSL3	H807 XXXX

[1] 4-Digit lot number XXXX

Information furnished by Analog Devices is believed to be accurate and reliable. However, no responsibility is assumed by Analog Devices for its use, nor for any infringements of patents or other rights of third parties that may result from its use. Specifications subject to change without notice. No license is granted by implication or otherwise under any patent or patent rights of Analog Devices. Trademarks and registered trademarks are the property of their respective owners.

For price, delivery, and to place orders: Analog Devices, Inc., One Technology Way, P.O. Box 9106, Norwood, MA 02062-9106
Phone: 781-329-4700 • Order online at www.analog.com
Application Support: Phone: 1-800-ANALOG-D

Evaluation PCB

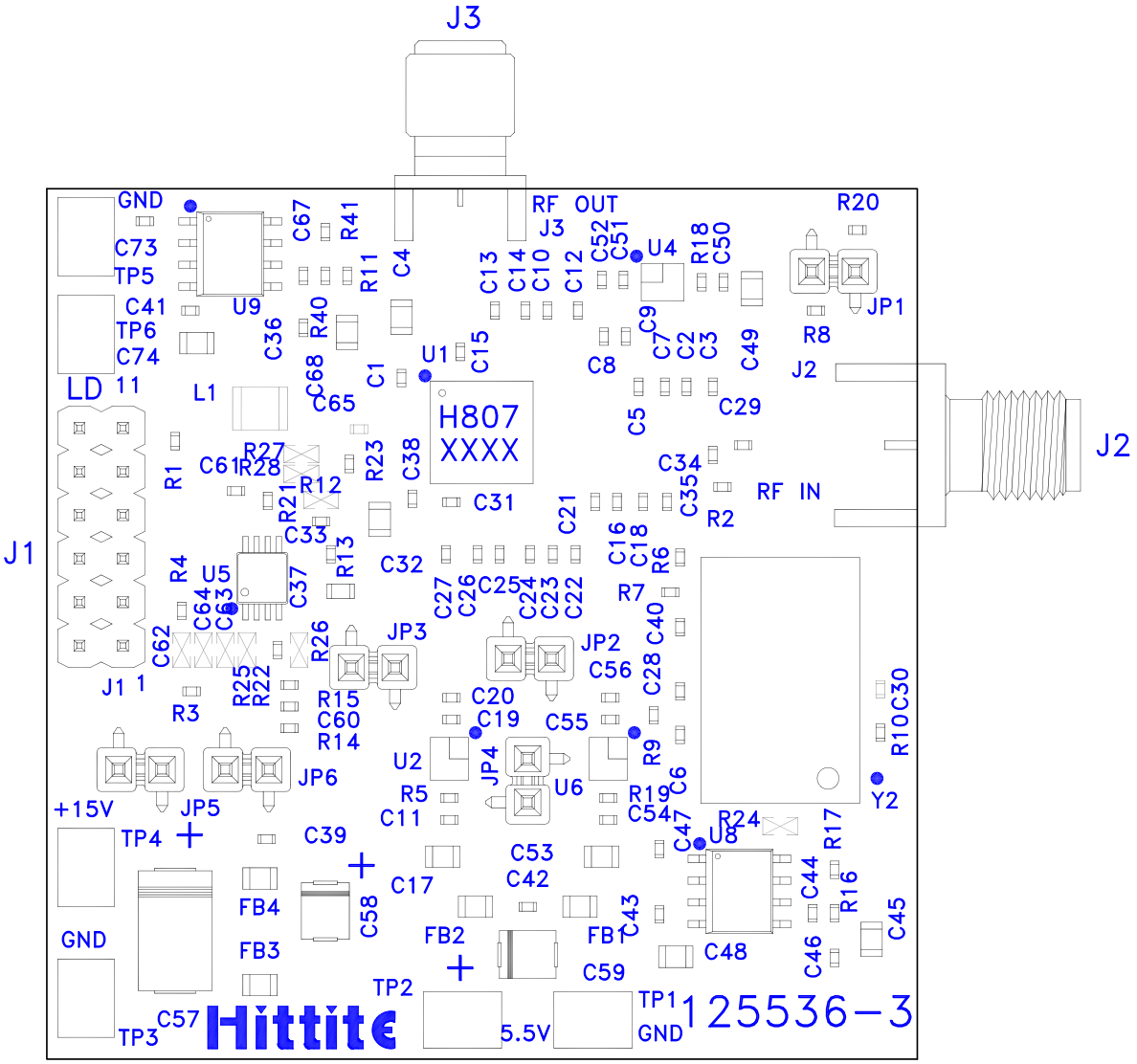

The circuit board used in the application should use RF circuit design techniques. Signal lines should have 50 Ohm impedance while the package ground leads and exposed paddle should be connected directly to the ground plane similar to that shown. A sufficient number of via holes should be used to connect the top and bottom ground planes. The evaluation circuit board shown is available from Hittite upon request.

Information furnished by Analog Devices is believed to be accurate and reliable. However, no responsibility is assumed by Analog Devices for its use, nor for any infringements of patents or other rights of third parties that may result from its use. Specifications subject to change without notice. No license is granted by implication or otherwise under any patent or patent rights of Analog Devices. Trademarks and registered trademarks are the property of their respective owners.

For price, delivery, and to place orders: Analog Devices, Inc., One Technology Way, P.O. Box 9106, Norwood, MA 02062-9106
Phone: 781-329-4700 • Order online at www.analog.com
Application Support: Phone: 1-800-ANALOG-D

List of Materials for Evaluation PCB 127283 [1]

Item	Description
J1	Dual Row Terminal Strip
J2, J3	PCB Mount SMA RF Connector
JP1 - JP6	Single Row Terminal Strip
C1, C21, C38 - C39, C60	1000 pF Capacitor, 0402 Pkg.
C2, C5, C6, C8, C10, C13, C16, C19, C22, C24, C26, C51, C55	10 pF Capacitor, 0402 Pkg.
C3, C7, C9, C11, C12, C14, C18, C20, C23, C25, C27 - C29, C34 - C36, C40 - C43, C46, C50, C52, C54, C56	0.1 µF Capacitor, 0402 Pkg.
C4, C17, C32, C45, C48, C49, C53, C68, C74	4.7 µF Capacitor, 0805 Pkg.
C15, C31	100 pF Capacitor, 0402 Pkg.
C33, C44, C67	1200 pF Capacitor, 0402 Pkg.
C37	0.039 µF Capacitor, 0603 Pkg.
C47, C73	10,000 pF Capacitor, 0402 Pkg.
C57	22 µF Tantalum Capacitor, Case D
C58, C59	4.7 µF Tantalum Capacitor, Case B
C61	3900 pF Capacitor, 0402 Pkg.
FB1 - FB4	1000 Ohm 200 mA Ferrite Chip, 0805 Pkg.
R1, R8	100k Ohm Resistor, 0402 Pkg.
R2, R7	120 Ohm Resistor, 0402 Pkg.
R3, R17, R20, R41	1k Ohm Resistor, 0402 Pkg.
R4	620 Ohm Resistor, 0402 Pkg.
R5, R14, R15, R18, R19	10k Ohm Resistor, 0402 Pkg.
R6	56 Ohm Resistor, 0402 Pkg.
R9	10 Ohm Resistor, 0402 Pkg.
R10, R22, R23	Zero Ohm Resistor, 0402 Pkg.
R11, R16, R40	4.02k Ohm Resistor, 0402 Pkg.
R13	200 Ohm Resistor, 0402 Pkg.
R21	30 Ohm Resistor, 0402 Pkg.
TP1 - TP6	Test Point PC Compact SMT
U1	HMC764LP6CE Fractional-N PLL, with Integrated VCO
U2, U4, U6	Low Noise 3.3V, 100 mA Linear Regulator
U5	Low Noise Op-Amp, THS4031IDGN
U8, U9	5V, 800mA Voltage Regulator
Y2	3.3V, 50 MHz VCXO Crystal Oscillator
PCB [2]	125536 Evaluation Board

[1] Reference this number when ordering complete evaluation PCB

[2] Circuit Board Material: Rogers 4350 or Arlon 25FR and FR4

Information furnished by Analog Devices is believed to be accurate and reliable. However, no responsibility is assumed by Analog Devices for its use, nor for any infringements of patents or other rights of third parties that may result from its use. Specifications subject to change without notice. No license is granted by implication or otherwise under any patent or patent rights of Analog Devices. Trademarks and registered trademarks are the property of their respective owners.

For price, delivery, and to place orders: Analog Devices, Inc., One Technology Way, P.O. Box 9106, Norwood, MA 02062-9106
Phone: 781-329-4700 • Order online at www.analog.com
Application Support: Phone: 1-800-ANALOG-D

Мы молодая и активно развивающаяся компания в области поставок электронных компонентов. Мы поставляем электронные компоненты отечественного и импортного производства напрямую от производителей и с крупнейших складов мира.

Благодаря сотрудничеству с мировыми поставщиками мы осуществляем комплексные и плановые поставки широчайшего спектра электронных компонентов.

Собственная эффективная логистика и склад в обеспечивает надежную поставку продукции в точно указанные сроки по всей России.

Мы осуществляем техническую поддержку нашим клиентам и предпродажную проверку качества продукции. На все поставляемые продукты мы предоставляем гарантию .

Осуществляем поставки продукции под контролем ВП МО РФ на предприятия военно-промышленного комплекса России , а также работаем в рамках 275 ФЗ с открытием отдельных счетов в уполномоченном банке. Система менеджмента качества компании соответствует требованиям ГОСТ ISO 9001.

Минимальные сроки поставки, гибкие цены, неограниченный ассортимент и индивидуальный подход к клиентам являются основой для выстраивания долгосрочного и эффективного сотрудничества с предприятиями радиоэлектронной промышленности, предприятиями ВПК и научно-исследовательскими институтами России.

С нами вы становитесь еще успешнее!

Наши контакты:

Телефон: +7 812 627 14 35

Электронная почта: sales@st-electron.ru

Адрес: 198099, Санкт-Петербург, Промышленная ул, дом № 19, литера Н, помещение 100-Н Офис 331