3.3V PECL/ECL DIFFERENTIAL PHASE-FREQUENCY DETECTOR

Precision Edge®
SY100EP140L

FEATURES

- >2GHz maximum frequency
- < 220ps rise/fall time
- Low-voltage: +3.3V ±10% operation
- Wide operating temperature range: –40°C to +85°C
- Fully differential throughput architecture
- Transfer gain:
  1.0mV/degree at 1.4GHz
  1.2mV/degree at 1.0GHz
- Available in 8-Pin SOIC package

ECL Pro™

DESCRIPTION

The SY100EP140L is a high-speed, 2GHz phase-frequency detector optimized to control ultra-low noise VCXOs (voltage-controlled crystal oscillators) in telecom and datacom systems. The phase-frequency detector compares two input signals—a reference input and a feedback input. Any mismatches in the two input signal's phase or frequency will result in the output UP or DOWN pulse stream. When the difference between the UP and DOWN outputs are integrated, the resulting control signal speeds-up or slows-down a VCO or acts as the error voltage for a precision VCXO.

The SY100EP140L I/O is 100K LVECL/LVPECL compatible. The device operates from a +3.0V to +3.6V (LVPECL) or –3.0V to -3.6V (LVECL) supply voltage. The output swing is 400mV with < 220ps rise/fall times, which enables the part to operate at a very high frequency. Operating temperature range is guaranteed over the –40°C to +85°C industrial range.

PIN NAMES

Pin	Function
D, /D	LVPECL/LVECL differential UP outputs. Terminate with 50Ω to V_{CC}–2V.
U, /U	LVPECL/LVECL differential DOWN outputs. Terminate with 50Ω to V_{CC}–2V.
R	LVPECL/LVECL reference input. Internal 75kΩ pulldown to V_{EE}. Default state is logic LOW when left floating.
FB	LVPECL/LVECL feedback input. Internal 75kΩ pulldown resistor to V_{EE}. Default state is logic LOW when left floating.
V_{CC}	Positive supply. Bypass with 0.1μF//0.01μF low ESR capacitors.
V_{EE}	Negative power supply. For PECL operation, connect to GND.

ECL Pro are trademarks of Micrel, Inc.
Precision Edge is a registered trademarks of Micrel, Inc.

PACKAGE/ORDERING INFORMATION

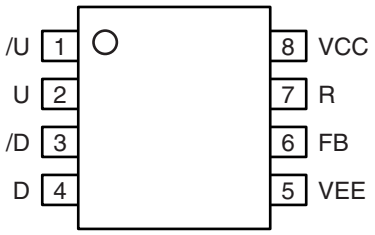

8-pin SOIC package

Ordering Information[1]

Part Number	Package Type	Operating Range	Package Marking	Lead Finish
SY100EP140LZC	Z8-1	Commercial	XP140L	Sn-Pb
SY100EP140LZCTR[2]	Z8-1	Commercial	XP140L	Sn-Pb
SY100EP140LZI	Z8-1	Industrial	XP140L	Sn-Pb
SY100EP140LZITR[2]	Z8-1	Industrial	XP140L	Sn-Pb
SY100EP140LZH[3]	Z8-1	Commercial	XP140L with Pb-Free bar-line indicator	NiPdAu Pb-Free
SY100EP140LZHTR[2, 3]	Z8-1	Commercial	XP140L with Pb-Free bar-line indicator	NiPdAu Pb-Free
SY100EP140LZG[3]	Z8-1	Industrial	XP140L with Pb-Free bar-line indicator	NiPdAu Pb-Free
SY100EP140LZGTR[2, 3]	Z8-1	Industrial	XP140L with Pb-Free bar-line indicator	NiPdAu Pb-Free

Notes:

1. Contact factory for die availability. Dice are guaranteed at $T_A = 25°C$, DC Electricals only.
2. Tape and Reel.
3. Pb-Free package is recommended for new designs.

PHASE DETECTOR LOGIC MODEL

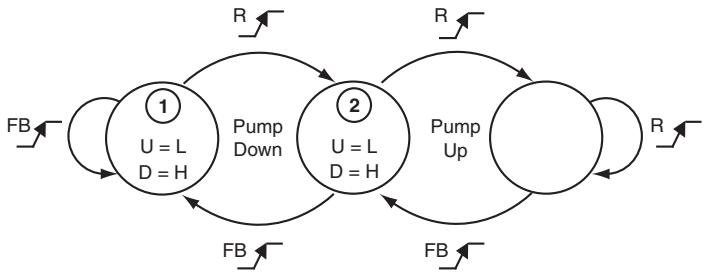

TRUTH TABLE

Phase Dector State	Input R	Input FB	Output U	Output D
Pump Down (2–1–2)				
2	L	L	L	L
2–1	L	H	L	H
1–2	H	X	L	L
2	L	L	L	L
Pump Up (2–3–2)				
2	L	L	L	L
2–3	H	L	H	L
3–2	X	H	L	L
2	L	L	L	L

LOGIC DIAGRAM

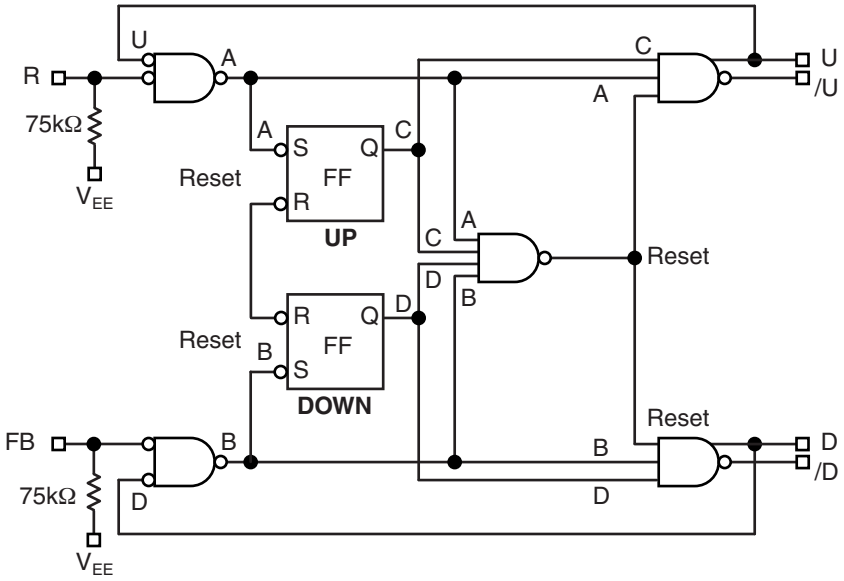

ABSOLUTE MAXIMUM RATINGS[1]

Symbol	Rating	Value	Unit
V_{CC} — V_{EE}	Power Supply Voltage	6V	V
V_{IN}	Input Voltage (V_{CC} = 0V, V_{IN} not more negative than V_{EE}) Input Voltage (V_{EE} = 0V, V_{IN} not more positive than V_{CC})	–6.0 to 0 +6.0 to 0	V V
I_{OUT}	Output Current –Continuous –Surge	50 100	mA
T_A	Operating Temperature Range	–40 to +85	°C
T_{LEAD}	Lead Temperature (Soldering, 20sec.)	+260	°C
T_{store}	Storage Temperature Range	–65 to +150	°C
	Maximum Junction Temperature	135	°C
θ_{JA}	Package Thermal Resistance (Junction-to-Ambient) –Still-Air (SOIC) –500lfpm (SOIC) –Still-Air (MSOP) –500lfpm (MSOP)	160 109 206 155	°C/W °C/W
θ_{JC}	Package Thermal Resistance (Junction-to-Case) (SOIC) (MSOP)	39 39	°C/W

Note 1. Permanent device damage may occur if absolute maximum ratings are exceeded. This is a stress rating only and functional operation is not implied at conditions other than those detailed in the operational sections of this data sheet. Exposure to absolute maximum ratlng conditions for extended periods may affect device reliability.

DC ELECTRICAL CHARACTERISTICS[1]

Symbol	Parameter	T_A = –40°C			T_A = +25°C			T_A = +85°C			Unit	Condition
		Min.	Typ.	Max.	Min.	Typ.	Max.	Min.	Typ.	Max.		
V_{CC}	Power Supply Voltage (LVPECL) (LVECL)	 3.0 –3.6	 — —	 3.6 –3.0	 3.0 –3.6	 — —	 3.6 –3.0	 3.0 –3.6	 — —	 3.6 –3.0	V	
I_{EE}	Power Supply Current	55	70	85	60	74	90	63	78	93	mA	
I_{IH}	Input HIGH Current	—	—	150	—	—	150	—	—	150	μA	$V_{IN} = V_{IH}$
I_{IL}	Input LOW Current R, FB	0.5	—	—	0.5	—	—	0.5	—	—	μA	$V_{IN} = V_{IL}$
C_{IN}	Input Capacitance (MSOP) (SOIC)	— —	— —	— —	— —	0.75 1.1	— —	— —	— —	— —	pF pF	

Note 1. 100KEP circuits are designed to meet the DC specifications shown in the above table after thermal equilibrium has been established. The circuit is in a test socket or mounted on a printed circuit board and traverse airflow greater than 500lfpm is maintained.

LVPECL DC ELECTRICAL CHARACTERISTICS[1]

V_{CC} = 3.3V ±10%, V_{EE} = 0V

Symbol	Parameter	T_A = –40°C			T_A = +25°C			T_A = +85°C			Unit	Condition
		Min.	Typ.	Max.	Min.	Typ.	Max.	Min.	Typ.	Max.		
V_{IL}	Input LOW Voltage (Single-Ended)	1355	—	1675	1355	—	1675	1355	—	1675	mV	
V_{IH}	Input HIGH Voltage (Single-Ended)	2075	—	2420	2075	—	2420	2075	—	2420	mV	
V_{OL}	Output LOW Voltage	1355	1480	1605	1355	1480	1605	1355	1480	1605	mV	50Ω to V_{CC}–2V
V_{OH}	Output HIGH Voltage	2155	2280	2405	2155	2280	2405	2155	2280	2405	mV	50Ω to V_{CC}–2V

Note 1. 100KEP circuits are designed to meet the DC specifications shown in the above table after thermal equilibrium has been established. The circuit is in a test socket or mounted on a printed circuit board and traverse airflow greater than 500lfpm is maintained. Input and output parameters are at V_{CC} = 3.3V. They vary 1:1 with V_{CC}.

ECL DC ELECTRICAL CHARACTERISTICS[1]

V_{CC} = 0V, V_{EE} = –3.6V to –3.0V

Symbol	Parameter	T_A = –40°C			T_A = +25°C			T_A = +85°C			Unit	Condition
		Min.	Typ.	Max.	Min.	Typ.	Max.	Min.	Typ.	Max.		
V_{IL}	Input LOW Voltage	–1945	—	–1625	–1945	—	–1625	–1945	—	–1625	mV	
V_{IH}	Input HIGH Voltage	–1225	—	–880	–1225	—	–880	–1225	—	–880	mV	
V_{OL}	Outuput LOW Voltage	–1545	–1420	–1295	–1545	–1420	–1295	–1545	–1420	–1295	mV	50Ω to V_{CC}–2V
V_{OH}	Output HIGH Voltage	–1145	–1020	–895	–1145	–1020	–895	–1145	–1020	–895	mV	50Ω to V_{CC}–2V

Note 1. 100KEP circuits are designed to meet the DC specifications shown in the above table after thermal equilibrium has been established. The circuit is in a test socket or mounted on a printed circuit board and traverse airflow greater than 500lfpm is maintained. Input and output parameters are at V_{CC} = 3.3V. They vary 1:1 with V_{CC}.

AC ELECTRICAL CHARACTERISTICS[1]

LVPECL: V_{CC} = 3.3V±10%, V_{EE} = 0V; LVECL: V_{EE} = –3.3V±10%, V_{CC} = 0V

Symbol	Parameter	T_A = –40°C			T_A = +25°C			T_A = +85°C			Unit	Condition
		Min.	Typ.	Max.	Min.	Typ.	Max.	Min.	Typ.	Max.		
f_{MAX}	Maximum Frequency[1]	—	>2	—	—	>2	—	—	>2	—	GHz	
t_{PLH} t_{PHL}	Propagation Delay to Output (Differential) R to U, FB to D FB to U, R to D	 220 280	 450 650	 600 800	 230 280	 475 650	 625 850	 240 300	 500 700	 650 900	 ps ps	
t_{JITTER}	Cycle-to-Cycle Jitter (rms)	—	0.2	< 1	—	0.2	< 1	—	0.2	< 1	ps_{rms}	
V_{PP}	Input Voltage Swing	400	800	1200	400	800	1200	400	800	1200	mV	
t_r, t_f	Output Rise/Fall Time Q, /Q (20% to 80%)	50	90	180	60	100	200	70	120	220	ps	

Note 1. Measured with 750mV input signal, 50% duty cycle. All loading with a 50Ω to V_{CC}–2.0V.

8-PIN PLASTIC SOIC (Z8-1)

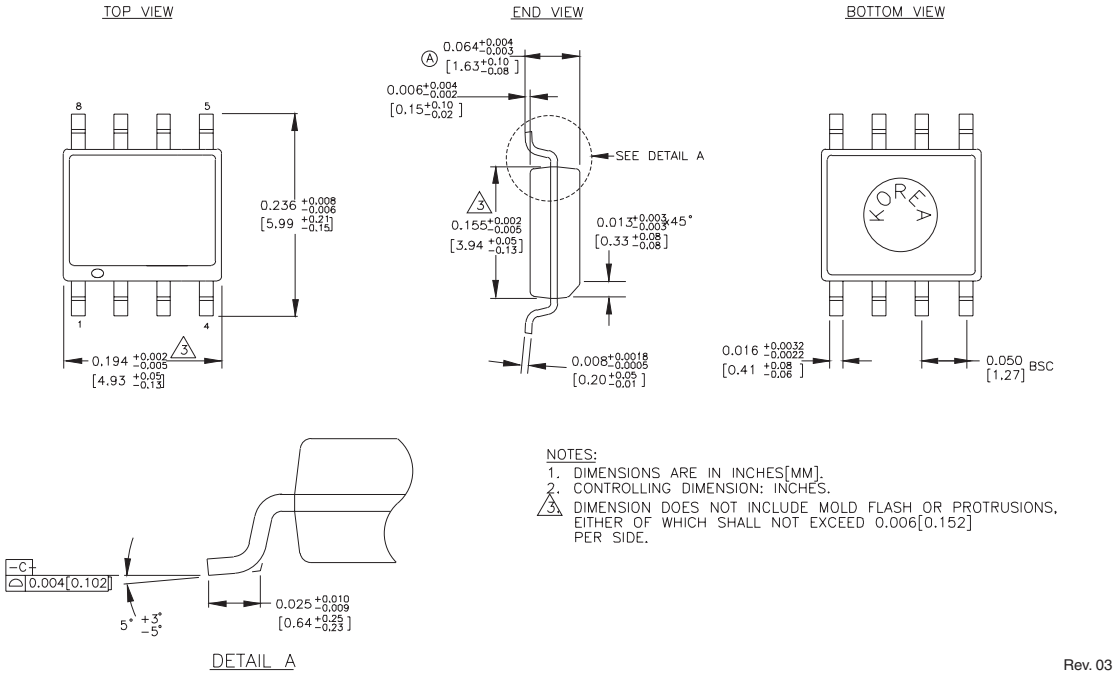

Rev. 03

MICREL, INC. 2180 FORTUNE DRIVE SAN JOSE, CA 95131 USA

TEL + 1 (408) 944-0800 FAX + 1 (408) 474-1000 WEB http://www.micrel.com

The information furnished by Micrel in this datasheet is believed to be accurate and reliable. However, no responsibility is assumed by Micrel for its use. Micrel reserves the right to change circuitry and specifications at any time without notification to the customer.

Micrel Products are not designed or authorized for use as components in life support appliances, devices or systems where malfunction of a product can reasonably be expected to result in personal injury. Life support devices or systems are devices or systems that (a) are intended for surgical implant into the body or (b) support or sustain life, and whose failure to perform can be reasonably expected to result in a significant injury to the user. A Purchaser's use or sale of Micrel Products for use in life support appliances, devices or systems is at Purchaser's own risk and Purchaser agrees to fully indemnify Micrel for any damages resulting from such use or sale.

© 2005 Micrel, Incorporated.

Мы молодая и активно развивающаяся компания в области поставок электронных компонентов. Мы поставляем электронные компоненты отечественного и импортного производства напрямую от производителей и с крупнейших складов мира.

Благодаря сотрудничеству с мировыми поставщиками мы осуществляем комплексные и плановые поставки широчайшего спектра электронных компонентов.

Собственная эффективная логистика и склад в обеспечивает надежную поставку продукции в точно указанные сроки по всей России.

Мы осуществляем техническую поддержку нашим клиентам и предпродажную проверку качества продукции. На все поставляемые продукты мы предоставляем гарантию .

Осуществляем поставки продукции под контролем ВП МО РФ на предприятия военно-промышленного комплекса России , а также работаем в рамках 275 ФЗ с открытием отдельных счетов в уполномоченном банке. Система менеджмента качества компании соответствует требованиям ГОСТ ISO 9001.

Минимальные сроки поставки, гибкие цены, неограниченный ассортимент и индивидуальный подход к клиентам являются основой для выстраивания долгосрочного и эффективного сотрудничества с предприятиями радиоэлектронной промышленности, предприятиями ВПК и научно-исследовательскими институтами России.

С нами вы становитесь еще успешнее!

Наши контакты:

Телефон: +7 812 627 14 35

Электронная почта: sales@st-electron.ru

Адрес: 198099, Санкт-Петербург, Промышленная ул, дом № 19, литера Н, помещение 100-Н Офис 331