Sensing and Control

# Tube Liquid Sensor

## OPB350 / OCB350 Series

(Calibration Circuit Available)

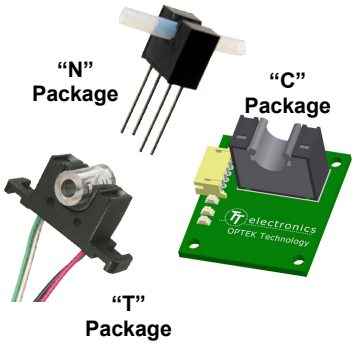


### Features:

- Can identify if liquid is present in clear tubes that have an outside diameter of 1/16" [1.6mm], 1/8" [3.2mm], 3/16" [4.8 mm] or 1/4" [6.3 mm]
- Opaque plastic housing enhances ambient light rejection
- Printed circuit board mounting or 24" (610 mm) 26 AWG wires

### Description:

The **OPB350** series liquid sensor is designed to work with 1/16" [1.6mm] 1/8" [3.2mm], 3/16" [4.8 mm] and 1/4" [6.3 mm] outside diameter clear tubes. When output reference circuitry is added, multiple output states such as "fluid present," "no fluid present" and "no tube present" can be recognized.

Clear liquid present causes the phototransistor to sink the maximum current, while dark liquid present causes it to sink the minimum current. As bubbles pass through the tube, the signal will vary between the "liquid present" and "no liquid" states. If no tube is present, the phototransistor sinks current between the dark fluid and clear fluid states. The customer will have to identify the typical current values for each situation. The ratio between the different states allows acknowledgement of different conditions.

The **OPB350L** series have leads that are designed to mount directly to PCBoards. The **OPB350W** series with 26 AWG wires are remote mountable. The **OCB350** series provides a full solution with automatic calibration capability and a preset trip level.

The **OCB350** series is configured to optimize the design effort needed to use a fluid sensor with the addition of self calibration circuitry. The **OCB350** series are easy to use requiring only an optical device and power supply. Four lights are provided on the board that acknowledge when the device is calibrated (Green LED), that the device could not be calibrated (Red LED) and when the analog output has reached the logical trip higher than the calibration point (Blue LED) or lower than the calibration point (Green LED). The internal phototransistor load resistance can be set for three different values (~2.5K, ~9.6K or ~27K Ohms). A Reset/Clear pin is provided for remote signaling to calibrate of the system.

The **OCB350** series comes with an OPB350L_ _ _Z, PCBoard, interface cable (OCB100-MC24) and all the necessary electronics required for sensing either transmissive or opaque fluids.

See "Theory of Operation" for detailed information.

For a custom PCBoard design for your unique challenge, contact your OPTEK representative.

### Applications:

- Non-contact fluid sensing
- IV fluid
- Oils and other petroleum products
- Colored fluids

RoHS

General Note
TT Electronics reserves the right to make changes in product specification without notice or liability. All information is subject to TT Electronics' own data and is considered accurate at time of going to print.

OPTEK Technology, Inc.
1645 Wallace Drive, Carrollton, TX 75006|Ph: +1 972 323 2200
www.optekinc.com | www.ttelectronics.com

© TT electronics plc

# Tube Liquid Sensor

## OPB350 / OCB350 Series

(Calibration Circuit Available)

| COMPLETE PART NUMBERS OF OPB350 AND OCB350 SERIES | |
|---|---|
| OPB350 | PCB mount for 1/8" tubing |
| OPB350L062 | PCB mount for 1/16" tubing |
| OPB350W062Z | Wired assembly for 1/16" tubing, with mounting tabs |
| OPB350L125 | PCB mount for 1/8" tubing |
| OPB350C125Z | Wired assembly for 1/8" tubing, mounting tabs & Molex connector 50-57-9404 |
| OPB350W125Z | Wired assembly for 1/8" tubing, with mounting tabs |
| OPB350L187 | PCB mount for 3/16" tubing |
| OPB350W187Z | Wired assembly for 3/16" tubing, with mounting tabs |
| OPB350L250 | PCB mount for 1/4" tubing |
| OPB350W250Z | Wired assembly for 1/4" tubing, with mounting tabs |
| OCB350L062Z | OPB350L062 mounted on OCB100AZ calibration circuit board, with OCB-100-MC24 cable* |
| OCB350L125Z | OPB350L125 mounted on OCB100AZ calibration circuit board, with OCB-100-MC24 cable* |
| OCB350L187Z | OPB350L187 mounted on OCB100AZ calibration circuit board, with OCB-100-MC24 cable* |
| OCB350L250Z | OPB350L250 mounted on OCB100AZ calibration circuit board, with OCB-100-MC24 cable* |

(*cable not sold separately)

Notes:

(1) All parameters tested using pulse technique.
(2) RMA flux is recommended. Duration can be extended to 10 seconds maximum when flow soldering.
(3) Methanol or isopropanol are recommended as cleaning agents. The plastic housing is soluble in chlorinated hydrocarbons and keytones.
(4) Derate linearly 1.33 mW/° C above 25° C.
(5) $E_{e(APT)}$ is a measurement of the average apertured radiant energy incident upon a sensing area 0.250" (6.350 mm) in diameter, which is perpendicular to and centered to the mechanical axis of the emitting surface at a distance of 0.466" (11.837 mm).
$E_{e(APT)}$ is not necessarily uniform within the measured area.
(6) The on/off ratio is referenced to the I.D. as specified for a clear PVC tube with O.D. per the device dimensions. The ratio is calculated by the $I_{C(ON)}$ when the tube is filled with water divided by the $I_{C(ON)}$ with an empty tube.

General Note
TT Electronics reserves the right to make changes in product specification without notice or liability. All information is subject to TT Electronics' own data and is considered accurate at time of going to print.

OPTEK Technology, Inc.
1645 Wallace Drive, Carrollton, TX 75006|Ph: +1 972 323 2200
www.optekinc.com | www.ttelectronics.com

© TT electronics plc

# Tube Liquid Sensor

## OPB350 / OCB350 Series

(Calibration Circuit Available)

## Electrical Specifications

### Absolute Maximum Ratings ($T_A$ = 25° C unless otherwise noted)

| | |
|---|---|
| Storage Temperature | -40° C to +100° C |
| Operating Temperature | -40° C to +85° C |
| Lead Soldering Temperature [1/16 inch (1.6 mm) from the case for 5 sec. with soldering iron] (2) | 260° C |
| **LED** | |
| Forward DC Current | 50 mA |
| Peak Forward Current (2 µs pulse width, 0.1 % duty cycle) | 1 A |
| Reverse DC Voltage | 2 V |
| Power Dissipation | 100 mW |
| **Output Phototransistor** | |
| Collector-Emitter Voltage | 24 or 30 V |
| Collector DC Current | 50 mA |
| Power Dissipation | 100 mW |

### Electrical Characteristics ($T_A$ = 25° C unless otherwise noted)

| SYMBOL | PARAMETER | MIN | TYP | MAX | UNITS | TEST CONDITIONS |
|---|---|---|---|---|---|---|
| **Input LED** (See OP245 for additional information — for reference only) | | | | | | |
| $V_F$ | Forward Voltage | - | - | 1.7 | V | $I_F$ = 20 mA |
| $I_R$ | Reverse Current | - | - | 100 | µA | $V_R$ = 2.0 V |
| **Output Phototransistor** (See OP555 [OPB350] & OP750 [-062, -125, -187 & -250] for additional information— for Ref. Only) | | | | | | |
| $V_{(BR)CEO}$ | Collector-Emitter Breakdown Voltage<br>OPB350<br>-062, -187 & -250 | 30<br>24 | -<br>- | -<br>- | V | $I_C$ = 100 µA, $E_E$ = 0 mw/cm² |
| $I_{CEO}$ | Collector-Emitter Dark Current | - | - | 100 | nA | $V_{CE}$ = 10 V, $I_F$ = 0, $E_E$ = 0 mw/cm² |
| **Coupled** | | | | | | |
| $V_{CE(SAT)}$ | Collector-Emitter Saturation Voltage | - | - | 0.4 | V | $I_C$ = 100 µA, $I_F$ = 5 mA |
| $I_{C(ON)}$ | On-State Collector Current<br>OPB350L062 & OPB350W062Z<br>OPB350<br>OPB350L125 & OPB350W125Z<br>OPB350L187 & OPB350W187Z<br>OPB350L250 & OPB350W250Z | <br>0.30<br>1.00<br>1.30<br>1.00<br>0.75 | <br>0.8<br>3.5<br>2.6<br>2.0<br>1.5 | <br>1.3<br>6.0<br>3.9<br>4.0<br>3.0 | mA | $V_{CE}$ = 0.4 V, $I_F$ = 5 mA |
| On/Off Ratio | OPB350L062 & OPB350W062Z<br>OPB350<br>OPB350L125 & OPB350W125<br>OPB350L187 & OPB350W187<br>OPB350L250 & OPB350W250 | -<br>-<br>-<br>-<br>- | 3.0<br>3.0<br>2.5<br>2.3<br>2.3 | -<br>-<br>-<br>-<br>- | - | $V_{CE}$ = 0.4 V, $I_F$ = 5 mA , I.D.=0.0312"(6)<br>$V_{CE}$ = 0.4 V, $I_F$ = 5 mA , I.D.=0.0625"(6)<br>$V_{CE}$ = 0.4 V, $I_F$ = 5 mA , I.D.=0.0870"(6)<br>$V_{CE}$ = 0.4 V, $I_F$ = 5 mA , I.D.=0.1250"(6) |

General Note
TT Electronics reserves the right to make changes in product specification without notice or liability. All information is subject to TT Electronics' own data and is considered accurate at time of going to print.

OPTEK Technology, Inc.
1645 Wallace Drive, Carrollton, TX 75006|Ph: +1 972 323 2200
www.optekinc.com | www.ttelectronics.com

© TT electronics plc

# Tube Liquid Sensor

## OPB350 / OCB350 Series

(Calibration Circuit Available)

### OPB350

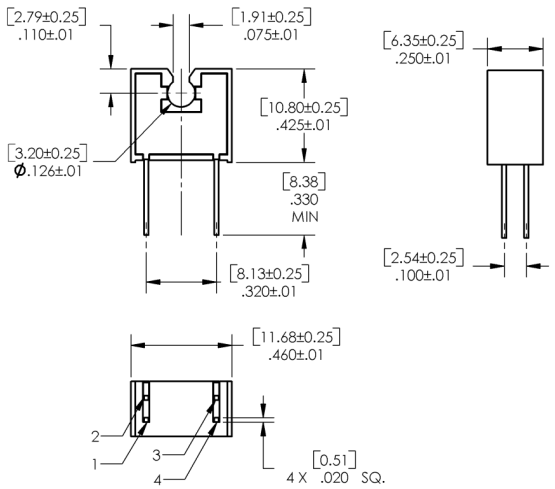


### OPB350L062 & OPB350W062Z
### OPB350L125 & OPB350W125Z

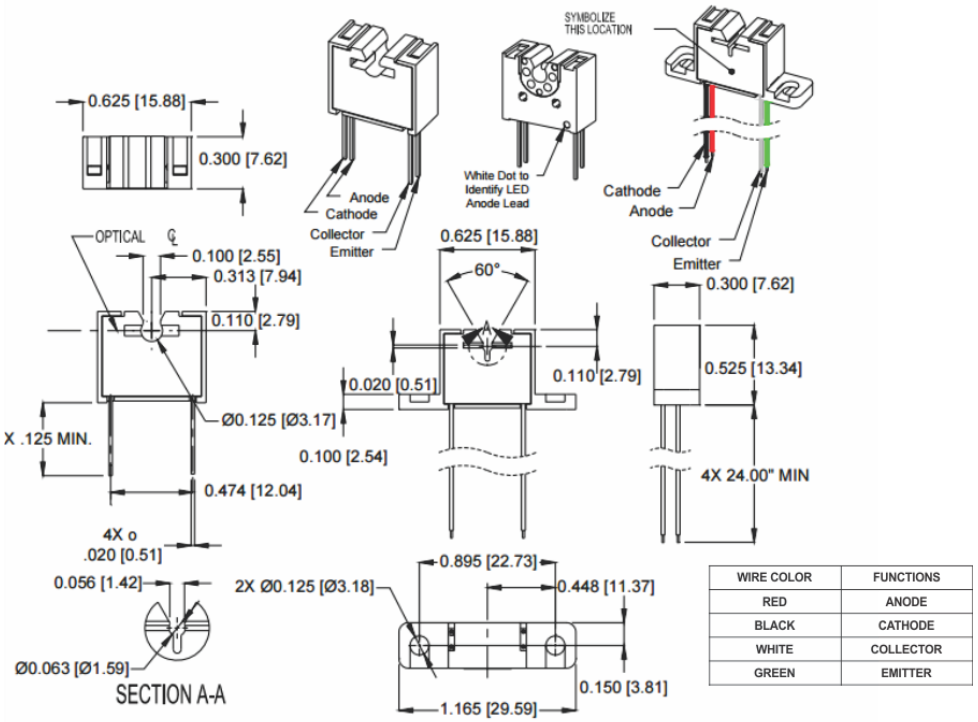


| WIRE COLOR | FUNCTIONS |
|---|---|
| RED | ANODE |
| BLACK | CATHODE |
| WHITE | COLLECTOR |
| GREEN | EMITTER |

General Note
TT Electronics reserves the right to make changes in product specification without notice or liability. All information is subject to TT Electronics' own data and is considered accurate at time of going to print.

OPTEK Technology, Inc.
1645 Wallace Drive, Carrollton, TX 75006|Ph: +1 972 323 2200
www.optekinc.com | www.ttelectronics.com

© TT electronics plc

# Tube Liquid Sensor

## OPB350 / OCB350 Series

(Calibration Circuit Available)

### OPB350L187 and OPB350L250

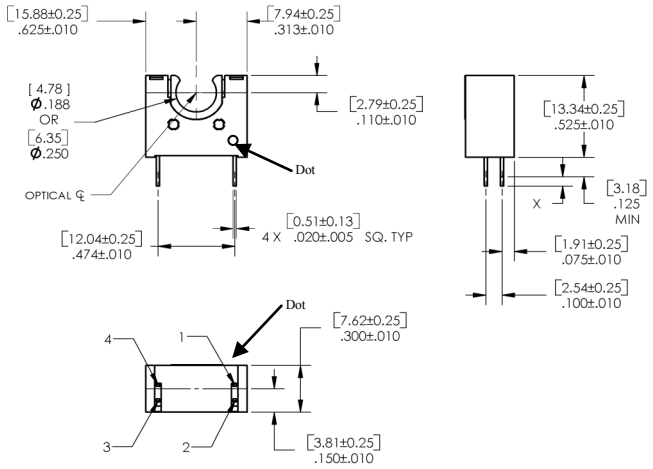


### OPB350W187Z and OPB350W250Z

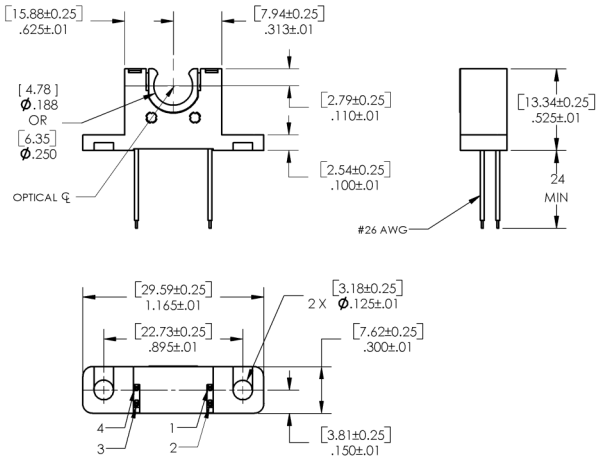


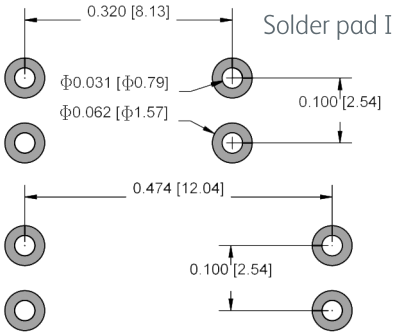


DIMENSIONS ARE IN: [ MILLIMETERS] INCHES

| Pin # | LED | Pin # | Transistor |
|---|---|---|---|
| 1 | Anode | 4 | Emitter |
| 2 | Cathode | 3 | Collector |

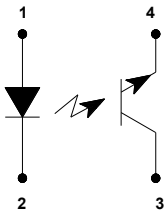


General Note
TT Electronics reserves the right to make changes in product specification without notice or liability. All information is subject to TT Electronics' own data and is considered accurate at time of going to print.

OPTEK Technology, Inc.
1645 Wallace Drive, Carrollton, TX 75006|Ph: +1 972 323 2200
www.optekinc.com | www.ttelectronics.com

© TT electronics plc

# Tube Liquid Sensor

## OPB350 / OCB350 Series

(Calibration Circuit Available)

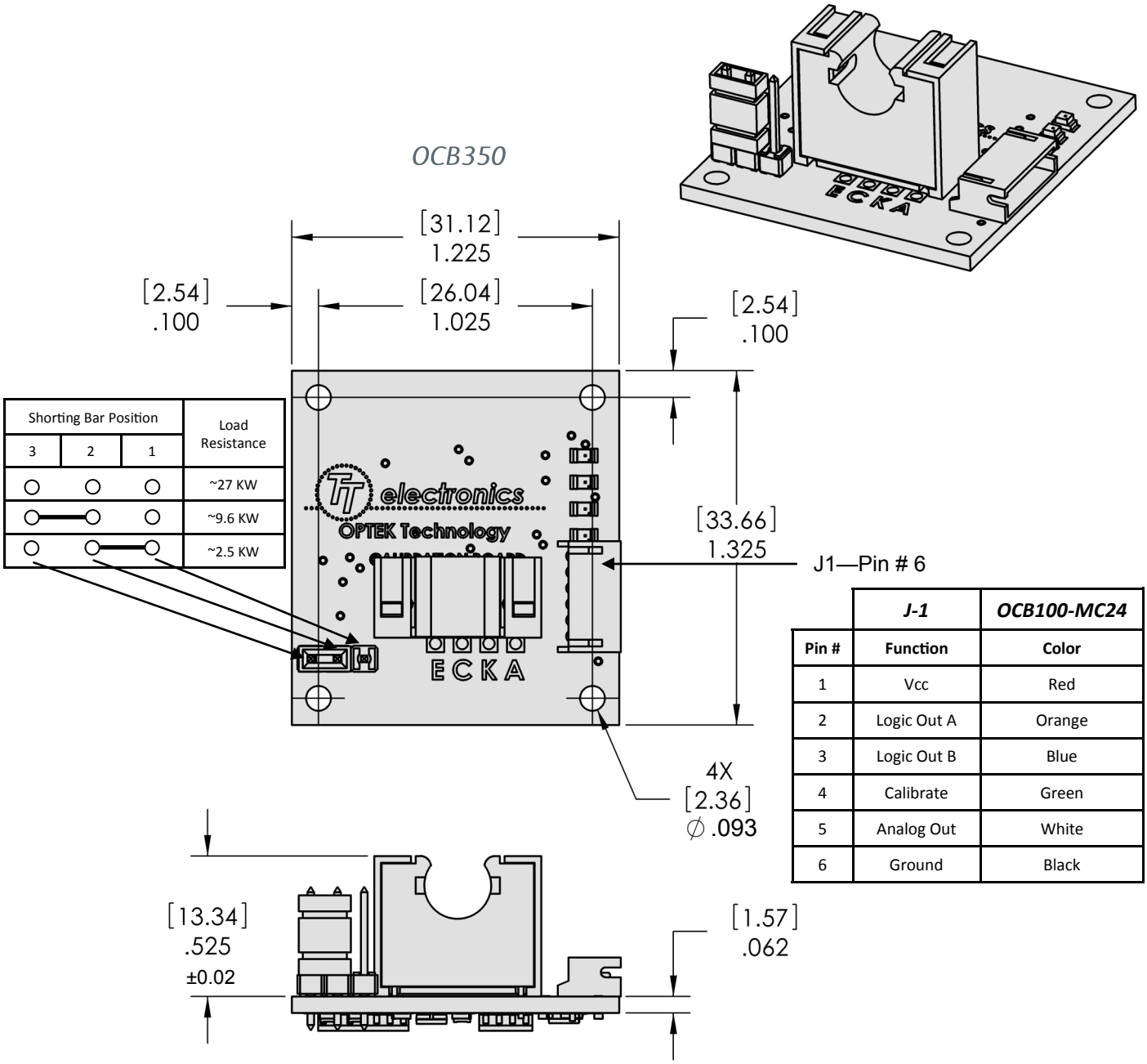


| Shorting Bar Position | | | Load Resistance |
|---|---|---|---|
| 3 | 2 | 1 | |
| ○ | ○ | ○ | ~27 KW |
| ○ | ● | ○ | ~9.6 KW |
| ○ | ○ | ● | ~2.5 KW |

| | J-1 | OCB100-MC24 |
|---|---|---|
| Pin # | Function | Color |
| 1 | Vcc | Red |
| 2 | Logic Out A | Orange |
| 3 | Logic Out B | Blue |
| 4 | Calibrate | Green |
| 5 | Analog Out | White |
| 6 | Ground | Black |

General Note
TT Electronics reserves the right to make changes in product specification without notice or liability. All information is subject to TT Electronics' own data and is considered accurate at time of going to print.

OPTEK Technology, Inc.
1645 Wallace Drive, Carrollton, TX 75006|Ph: +1 972 323 2200
www.optekinc.com | www.ttelectronics.com

© TT electronics plc

# Tube Liquid Sensor

## OPB350 / OCB350 Series

(Calibration Circuit Available)

OCB-MC24
(not sold separately)

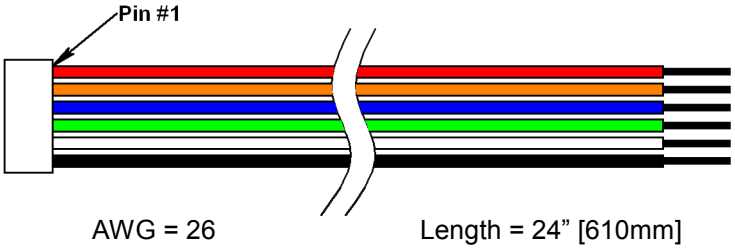


General Note
TT Electronics reserves the right to make changes in product specification without notice or liability. All information is subject to TT Electronics’ own data and is considered accurate at time of going to print.

OPTEK Technology, Inc.
1645 Wallace Drive, Carrollton, TX 75006|Ph: +1 972 323 2200
www.optekinc.com | www.ttelectronics.com

© TT electronics plc

## Calibration Circuit theory of operation:

The OCB350 series is designed to minimize the change of optical devices due to manufacturing variance. With the calibration circuit, the design engineer can narrow the initial output state providing a device that will operate the same for years with the same startup state thus enhancing the reliability and consistence of the system. Degradation of the LED or phototransistor is compensated for each time the system is calibrated allowing the system to provide a known, consistent output level resulting in years of consistent quality. The OCB350 series are designed to maintain the calibrated setting even if power is lost. This allows faster startup without the need for calibration every time the device is initiated. The designer can initiate the calibration procedure at any time by momentarily grounding J1-Pin-4 (green wire). This allows the device to be remotely calibrated then mounted in the equipment.

The PCBoard has a set of shorting pins allowing the user to change the phototransistor load resistor. By arranging the shorting bar to the appropriate location (see table), the load resistance can be changed from approximately 2.5K to 27 K W. Increasing the load resistor increases the sensitivity of the device.

When the "Calibrate" pin (#4) is momentarily grounded, the system begins its calibration process and raises the current through the LED, from 0 mA to 14 mA, until the phototransistor reaches the preset calibration point. A green calibration light will blink during the initiation and will stop when the preset phototransistor output level is reached. At this time, the LED drive current is locked and maintained until Reset/Clear pin is momentarily grounded. If for some reason, the LED drive current reaches the maximum allowable value, a RED warning light will be turned on. During the calibration process, remote monitoring of J1-Pin3 allows the designer to ensure the system is calibrated (this output should be at the preset calibrated output level when the calibration procedure is completed). The phototransistor load resistor may need to be adjusted to allow the system to calibrate properly.

After the calibration process is complete, the device is ready for acknowledgement of a change in the signal. The design engineer can monitor either the Analog Output (J1-Pin 5) or Logical Output (J1-Pin 2 or J1-Pin 3).

The Logical output will change state once the preset optical light condition is reached. The "Logic Out B" switches when the optical signal increases above approximately 2/3 of $V_{CC}$ while "Logic Out A" switches when the optical signal decreases below approximately 1/3 of $V_{CC}$.

As with all optical devices, the switching condition is consistent with the phototransistor receiving a preset light level. This switching position and light level may vary dependent on several possible factors such as:

- Ambient light variation ((reduced or eliminated with periodic recalibration)
- LED and phototransistor pair degradation (eliminated with periodic recalibration)
- Contamination in front of either the LED or phototransistor (reduced or eliminated with periodic cleaning)
- System power variation (reduced or eliminated with periodic recalibration)
- Temperature changes (reduced or eliminated with periodic recalibration)

General Note
TT Electronics reserves the right to make changes in product specification without notice or liability. All information is subject to TT Electronics' own data and is considered accurate at time of going to print.

OPTEK Technology, Inc.
1645 Wallace Drive, Carrollton, TX 75006|Ph: +1 972 323 2200
www.optekinc.com | www.ttelectronics.com

© TT electronics plc

# Electrical Specifications

## Absolute Maximum Ratings OCB350 Series ($T_A$=25°C unless otherwise noted)

| | |
|---|---|
| Storage & Operating Temperature Range | 0°C to +70°C |
| Lead Soldering Temperature [1/16 inch (1.6mm) from the case for 5 sec. with soldering iron] | 260°C |

## Electrical Characteristics OCB350 Series ($T_A$ = 25°C unless otherwise noted)

| Symbol | Parameter | Min | Max | Units | Conditions |
|---|---|---|---|---|---|
| $V_{CC}$ | Supply Voltage | 4.75 | 5.25 | V | |
| $I_{CC}$ | Supply Current | - | 35 | mA | Vcc = 5.0 Volts |
| $V_{OL}$ | Low Level Output Voltage(1) | - | 1.2 | V | Vcc = 5.0 Volts, $V_{OUT}$ < 2.2 Volts |
| $V_{OH}$ | High Level Output Voltage(1) | 3.5 | - | V | Vcc = 5.0 Volts, $V_{OUT}$ > 2.8 Volts |

Notes:
1. Pins 2 and 3 logic outputs only.

General Note
TT Electronics reserves the right to make changes in product specification without notice or liability. All information is subject to TT Electronics' own data and is considered accurate at time of going to print.

OPTEK Technology, Inc.
1645 Wallace Drive, Carrollton, TX 75006|Ph: +1 972 323 2200
www.optekinc.com | www.ttelectronics.com

© TT electronics plc

# Tube Liquid Sensor

## OPB350 / OCB350 Series

(Calibration Circuit Available)

### Schematic for OCB100 PCBoard

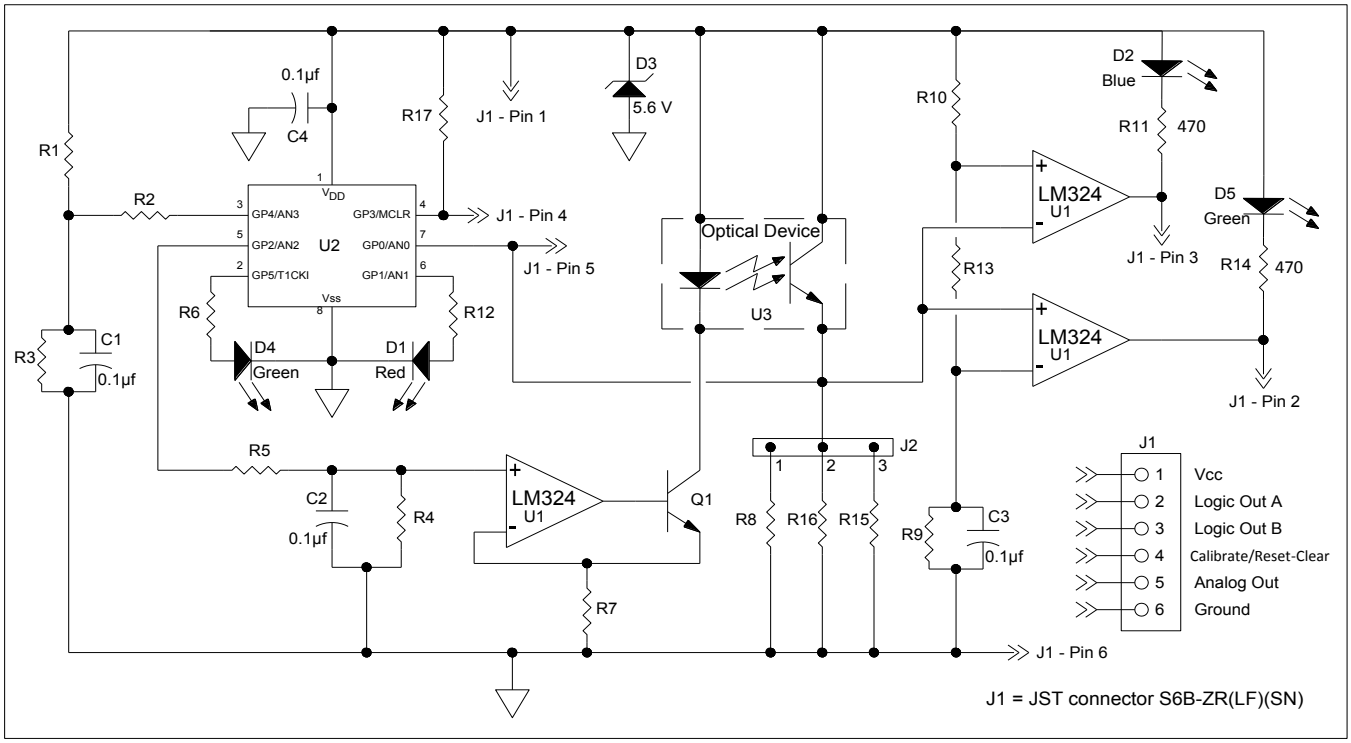


### OCB100-MC24

(not sold separately)

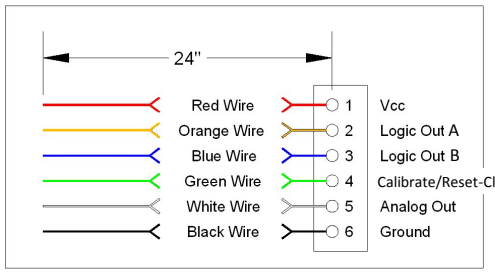


General Note
TT Electronics reserves the right to make changes in product specification without notice or liability. All information is subject to TT Electronics' own data and is considered accurate at time of going to print.

OPTEK Technology, Inc.
1645 Wallace Drive, Carrollton, TX 75006|Ph: +1 972 323 2200
www.optekinc.com | www.ttelectronics.com

© TT electronics plc

# Tube Liquid Sensor

## OPB350 / OCB350 Series

(Calibration Circuit Available)

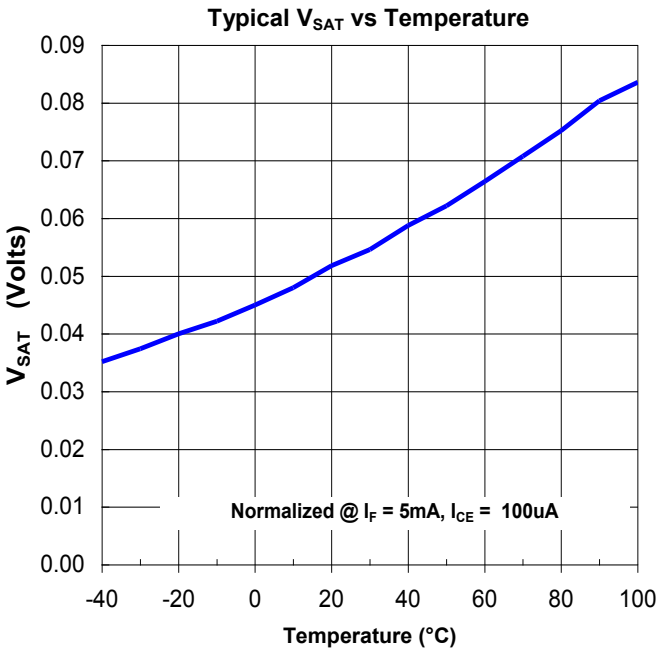


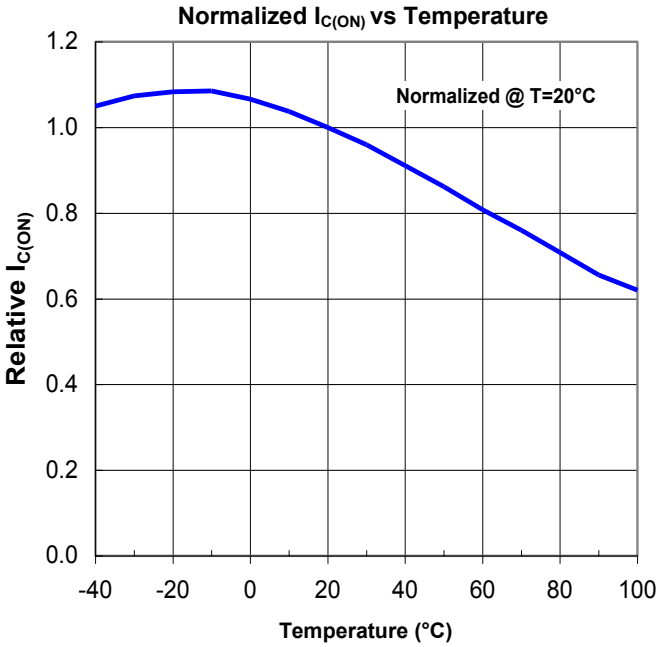


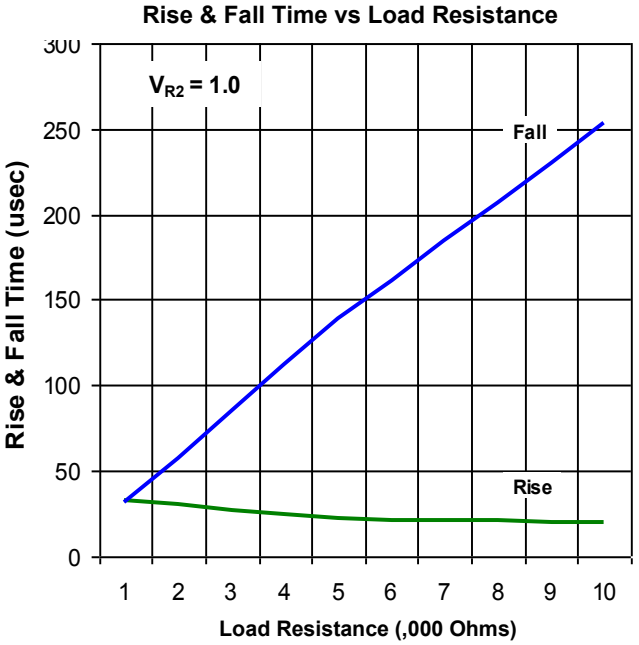


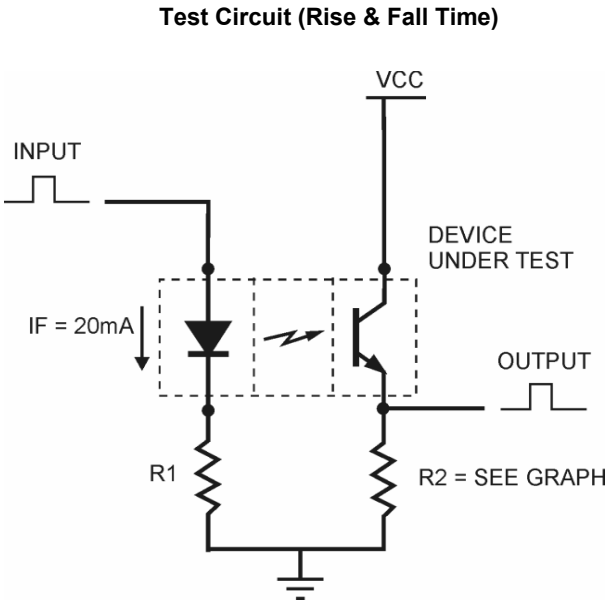


General Note
TT Electronics reserves the right to make changes in product specification without notice or liability. All information is subject to TT Electronics' own data and is considered accurate at time of going to print.

OPTEK Technology, Inc.
1645 Wallace Drive, Carrollton, TX 75006|Ph: +1 972 323 2200
www.optekinc.com | www.ttelectronics.com

© TT electronics plc

Мы молодая и активно развивающаяся компания в области поставок электронных компонентов. Мы поставляем электронные компоненты отечественного и импортного производства напрямую от производителей и с крупнейших складов мира.

Благодаря сотрудничеству с мировыми поставщиками мы осуществляем комплексные и плановые поставки широчайшего спектра электронных компонентов.

Собственная эффективная логистика и склад в обеспечивает надежную поставку продукции в точно указанные сроки по всей России.

Мы осуществляем техническую поддержку нашим клиентам и предпродажную проверку качества продукции. На все поставляемые продукты мы предоставляем гарантию .

Осуществляем поставки продукции под контролем ВП МО РФ на предприятия военно-промышленного комплекса России , а также работаем в рамках 275 ФЗ с открытием отдельных счетов в уполномоченном банке. Система менеджмента качества компании соответствует требованиям ГОСТ ISO 9001.

Минимальные сроки поставки, гибкие цены, неограниченный ассортимент и индивидуальный подход к клиентам являются основой для выстраивания долгосрочного и эффективного сотрудничества с предприятиями радиоэлектронной промышленности, предприятиями ВПК и научно-исследовательскими институтами России.

С нами вы становитесь еще успешнее!

**Наши контакты:**

**Телефон:** +7 812 627 14 35

**Электронная почта:** sales@st-electron.ru

**Адрес:** 198099, Санкт-Петербург, Промышленная ул, дом № 19, литера Н, помещение 100-Н Офис 331