RE46C165/6/7/8

CMOS Photoelectric Smoke Detector ASIC with Interconnect, Timer Mode and Alarm Memory

Features

- Temporal Horn Pattern or Continuous Tone
- Alarm Memory
- Sensitivity Control Times:
  - 9 minutes (RE46C165/6)
  - 1.2 minutes (RE46C167/8)
- I/O Filter and Charge Dump
- Interconnect up to 40 Detectors
- Internal Power-on Reset
- >2000V ESD Protection (HBM) on All Pins
- Low Quiescent Current Consumption (<8 µA)
- Internal Low Battery Detection and Chamber Test
- RoHS Compliant Lead-Free Packaging

Description

The RE46C165/6/7/8 devices are low-power, CMOS photoelectric type, smoke detector ICs. With minimal external components, these circuits will provide all the required features for a photoelectric type smoke detector.

Each design incorporates a gain selectable photo amplifier for use with an infrared emitter/detector pair.

An internal oscillator strobes power to the smoke detection circuitry for 100 µs every 10 seconds to keep standby current to a minimum. If smoke is sensed, the detection rate is increased to verify an alarm condition. A high gain mode is available for push button chamber testing.

A check for a low battery condition and chamber integrity is performed every 43 seconds when in standby. The temporal horn pattern supports the NFPA 72 emergency evacuation signal.

An interconnect pin allows multiple detectors to be connected so when one unit alarms, all units will sound. A charge dump feature will quickly discharge the interconnect line when exiting a local alarm. The interconnect input is also digitally filtered.

An internal timer allows for single button, push-to-test to be used for a reduced sensitivity mode.

An alarm memory feature allows the user to determine if the unit has previously entered a local alarm condition.

Utilizing low-power CMOS technology, the RE46C165/6/7/8 was designed for use in smoke detectors that comply with Underwriters Laboratory Specification UL217 and UL268.

© 2010 Microchip Technology Inc.

Package Types

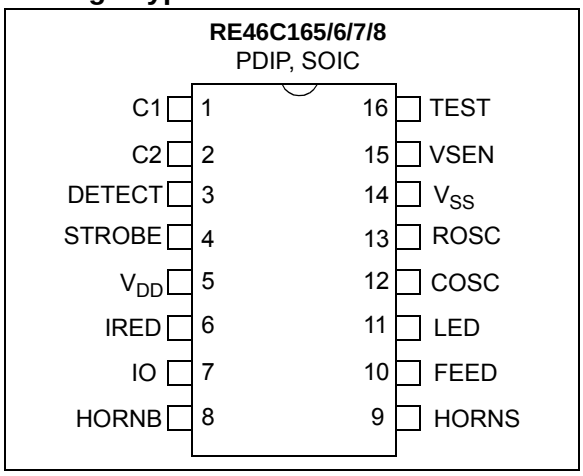

Functional Block Diagram

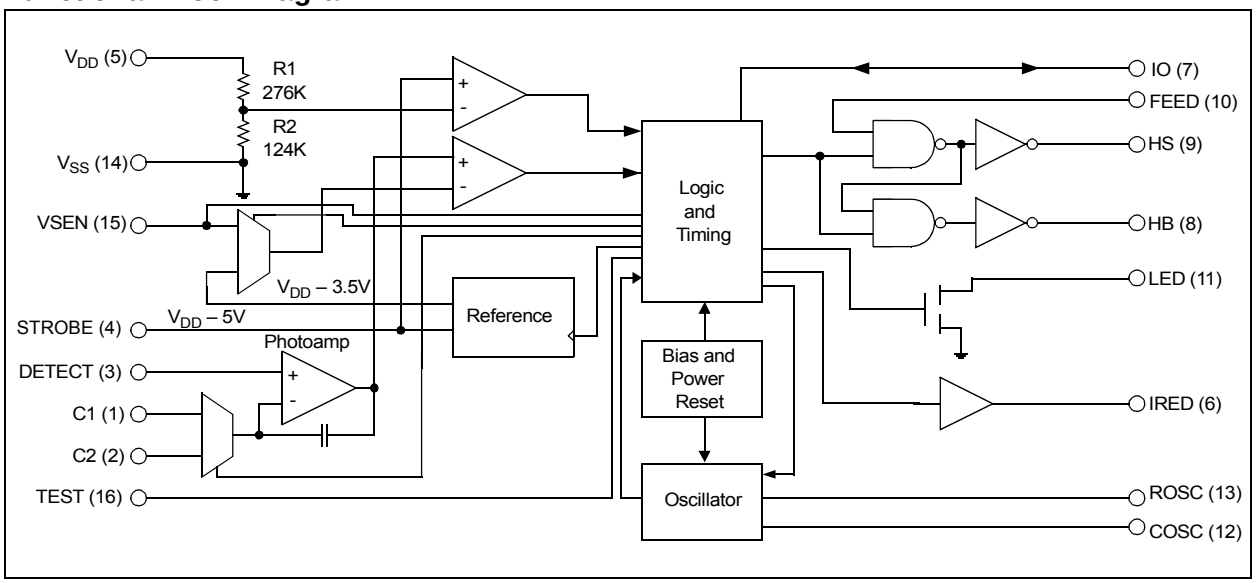

© 2010 Microchip Technology Inc.

Typical Application

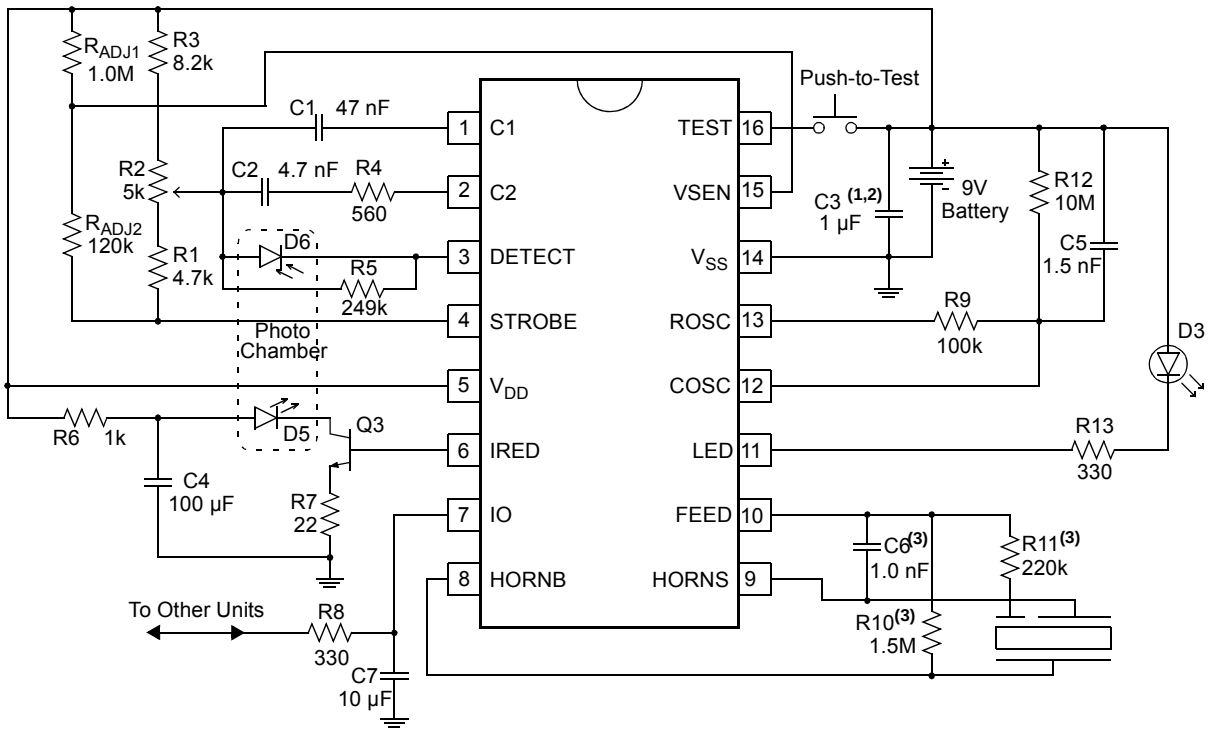

Note 1: C3 should be located as close as possible to the device power pins.

2: C3 is typical for an alkaline battery. This capacitance should be increased to 4.7 µF or greater for a carbon battery.

3: R10, R11 and C6 are typical values and may be adjusted to maximize sound pressure.

NOTES:

© 2010 Microchip Technology Inc.

1.0 ELECTRICAL CHARACTERISTICS

Absolute Maximum Ratings†

V_{DD} 12.5V
Input Voltage Range Except FEED, I/O .. V_{IN} = -.3V to V_{DD} +.3V
FEED Input Voltage Range ..... V_{INFD} =-10 to +22V
I/O Input Voltage Range ..... V_{IO1}= -.3 to 15V
Input Current except FEED, TEST, VSEN ..... I_{IN} = 10 mA
Input Current for FEED, VSEN ..... I_{IN} = 500 µA
Operating Temperature ..... T_{A} = -25 to +75°C
Storage Temperature ..... T_{STG} = -55 to +125°C
Maximum Junction Temperature ..... T_{J} = +150°C

† **Notice:** Stresses above those listed under "Maximum ratings" may cause permanent damage to the device. This is a stress rating only and functional operation of the device at these or any other conditions above those indicated in the operation listings of this specification is not implied. Exposure to maximum rating conditions for extended periods may affect device reliability.

DC ELECTRICAL CHARACTERISTICS

DC Electrical Characteristics: Unless otherwise indicated, all parameters apply at T_A = -25° to +75°, V_{DD} = 9V, Typical Application (unless otherwise noted), V_{SS} = 0V

Parameter	Symbol	Test Pin	Min	Typ	Max	Units	Conditions
Supply Voltage	V_{DD}	5	6	—	12	V	Operating
Supply Current	I_{DD1}	5	—	4	6	µA	COSC = V_{SS}, LED off
	I_{DD2}	5	—	5.5	8	µA	COSC = V_{SS}, LED off, V_{DD} = 12V
	I_{DD3}	5	—	—	2	mA	COSC = V_{SS}, STROBE on IRED off
	I_{DD4}	5	—	—	3	mA	COSC = V_{SS}, STROBE on, IRED on, **Note 1**
Input Voltage High	V_{IH1}	10	6.2	4.5	—	V	FEED
	V_{IH2}	7	3.2	—	—	V	No local alarm, I/O as an input
	V_{IH3}	15	1.6	—	—	V	VSEN
	V_{IH4}	16	8.5	—	—	V	TEST
Input Voltage Low	V_{IL1}	10	—	4.5	2.7	V	FEED
	V_{IL2}	7	—	—	1.5	V	No local alarm, I/O as an input
	V_{IL3}	15	—	—	0.5	V	VSEN
	V_{IL4}	16	—	—	7	V	TEST
Input Leakage Low	I_{IL1}	1, 2, 3	—	—	-100	nA	V_{DD} = 12V, COSC = 12V, STROBE active
	I_{IL2}	12, 10	—	—	-100	nA	V_{DD} = 12V, V_{IN} = V_{SS}
	I_{IL3}	15, 16	—	—	-1	µA	V_{DD} = 12V, V_{IN} = V_{SS}
	I_{LFD}	10	—	—	-50	µA	FEED = -10V

Note 1: Does not include Q3 emitter current.
2: Not production tested.
3: Production test at room temperature with guard banded limits.

DC ELECTRICAL CHARACTERISTICS (CONTINUED)

DC Electrical Characteristics: Unless otherwise indicated, all parameters apply at T_A = -25° to +75°, V_{DD} = 9V, Typical Application (unless otherwise noted), V_{SS} = 0V

Parameter	Symbol	Test Pin	Min	Typ	Max	Units	Conditions
Input Leakage High	I_{IH1}	1, 2	—	—	100	nA	V_{DD} = 12V, V_{IN} = V_{DD}, STROBE active
	I_{IH2}	3, 10, 12	—	—	100	nA	V_{DD} = 12V, V_{IN} = V_{DD}
	I_{HFD}	10	—	—	50	µA	FEED = 22V
Input Pull Down Current	I_{PD1}	16	0.25	—	10	µA	V_{IN} = V_{DD}
	I_{PD2}	15	0.1	0.25	0.5	µA	V_{IN} = V_{DD}
	I_{PDIO1}	7	20	—	80	µA	V_{IN} = V_{DD}
	I_{PDIO2}	7	—	—	140	µA	V_{IN} = 15V, V_{DD} = 12V
Output Off Leakage Low	I_{OZL1}	11, 13	—	—	-1	µA	Outputs off, Output = V_{SS}
Output Off Leakage High	I_{OZH1}	11, 13	—	—	1	µA	Outputs off, Output = V_{DD}
Output High Voltage	V_{OH1}	8, 9	5.5	—	—	V	I_{OH} = -16 mA, V_{DD} = 6.5V
Output Low Voltage	V_{OL1}	8, 9	—	—	1	V	I_{OL} = 16 mA, V_{DD} = 6.5V
	V_{OL2}	13	—	.5	—	V	I_{OL} = 5 mA, V_{DD} = 6.5V
	V_{OL3}	11	—	—	0.6	V	I_{OL} = 10 mA, V_{DD} = 6.5V
Output Current	I_{IOH1}	7	-4	—	-16	mA	Alarm, V_{IO} = V_{DD} - 2V or V_{IO} = 0V
	I_{IODMP}	7	5	—	—	mA	At Conclusion of Local Alarm or Test, V_{IO} = 1V
Low Battery Voltage	V_{LB}	5	6.9	7.2	7.5	V	
Output Voltage	V_{STOF}	4	V_{DD} -.1	—	—	V	STROBE off, V_{DD} = 12V, I_{OUT} = -1 µA
	V_{STON}	4	V_{DD} -5.25	V_{DD} -5	V_{DD} -4.75	V	STROBE on, V_{DD} = 9V, I_{OUT} = 100 µA to 500 µA
	V_{IREDOF}	6	—	—	0.1	V	IRED off, V_{DD} = 12V, I_{OUT} = 1 µA
	V_{IREDON}	6	2.85	3.1	3.35	V	IRED on, V_{DD} = 9V, I_{OUT} = 0 to -6 mA, T_A = +25°C
Common Mode Voltage	V_{CM1}	1, 2, 3	0.5	—	V_{DD}-2	V	Local smoke, Push-to-Test or Chamber Test, **Note 2**
Smoke Comparator Reference	V_{REF}	—	V_{DD} -3.7	V_{DD} -3.5	V_{DD} -3.3	V	Internal Reference, **Note 2**
Temperature Coefficient	TC_{ST}	4	—	0.01	—	%/°C	STROBE output voltage, V_{DD} = 6V to 12V
	TC_{IRED}	6	—	0.3	—	%/°C	IRED output voltage, V_{DD} = 6V to 12V
Line Regulation	ΔV_{STON}	4, 5	—	-50	—	dB	STROBE output (vs. V_{DD}), V_{DD} = 6V to 12V
	ΔV_{IREDON}	6, 5	—	-30	—	dB	IRED output voltage, V_{DD} = 6V to 12V

Note 1: Does not include Q3 emitter current.
2: Not production tested.
3: Production test at room temperature with guard banded limits.

© 2010 Microchip Technology Inc.

AC ELECTRICAL CHARACTERISTICS

AC Electrical Characteristics: Unless otherwise indicated, all parameters apply at T_A = -25° to 75°, V_{DD} = 9V, Typical Application (unless otherwise noted), V_{SS} = 0V.

Parameter	Symbol	Test Pin	Min	Typ	Max	Units	Clocks	Conditions
Oscillator Time Base (COSC, ROSC)								
Oscillator Period	T_{POSC}	9	9.38	10.42	11.46	ms	1	Operating, **Note 1**
Oscillator Tolerance	T_{TOLOSC}	9	-10	0	10	%	1	Operating
LED Indication (LED)								
LED On Time	T_{ON1}	11	9.4	10.4	11.5	ms	1	Operating
LED Period	T_{PLED0}	11	LED IS NOT ON			s	—	Remote alarm only
	T_{PLED1}	11	38	43	47	s	4096	Standby, no alarm
	T_{PLED2}	11	450	500	550	ms	48	Local alarm condition
	T_{PLED3}	11	9.6	10.7	11.7	s	1024	Timer mode, no local alarm
	T_{PLED4}	11	225	250	275	ms	24	Timer mode, no local alarm
Alarm Memory LED Pulse Train (3x) Off Time	T_{OFLED}	11	1.2	1.3	1.5	s	127	Alarm memory set, LED enabled
Alarm Memory LED Timer Period	T_{LALED}	11	21.5	23.9	26.3	Hours	8257536	Alarm memory set
Detection (STROBE, IRED)								
STROBE On Time	T_{STON}	4	9.4	10.4	11.5	ms	1	Smoke test, Chamber test
IRED On Time	T_{IRON}	6	94	104	114	µs	0.01	Operating/DIAG, **Note 1**

Note 1: T_{POSC} and T_{IRON} are 100% production tested. All other timing is verified by functional testing.

2: See timing diagram for Horn Temporal Pattern in Figure 3-2.

3: See timing diagram for Horn Continuous Pattern in Figure 3-3.

4: During Timer mode, the LED Period is 10.5 seconds. The LED period will return to 43 seconds at the conclusion of the Timer mode.

AC ELECTRICAL CHARACTERISTICS (CONTINUED)

AC Electrical Characteristics: Unless otherwise indicated, all parameters apply at T_A = -25° to 75°, V_{DD} = 9V, Typical Application (unless otherwise noted), V_{SS} = 0V.

Parameter	Symbol	Test Pin	Min	Typ	Max	Units	Clocks	Conditions
Smoke Test Period IRED and STROBE	T_{PER0}	4, 6	9.6	10.7	11.7	s	1024	Standby, no alarm
	T_{PER1}	4, 6	1.8	2.0	2.2	s	192	**RE46C165/7 only** Standby, 1 valid smoke sample
		4, 6	2.4	2.7	2.9	s	256	**RE46C166/8 only** Standby, 1 valid smoke sample
	T_{PER2}	4, 6	0.9	1.0	1.1	s	96	**RE46C165/7 only** Standby, after 2 consecutive valid smoke samples
		4, 6	1.2	1.3	1.5	s	128	**RE46C166/8 only** Standby, after 2 consecutive valid smoke samples
	T_{PER3}	4, 6	0.9	1.0	1.1	s	96	**RE46C165/7 only** Local Alarm – (3 consecutive valid smoke samples)
		4, 6	1.2	1.3	1.5	s	128	**RE46C166/8 only** Local Alarm – (3 consecutive valid smoke samples)
	T_{PER4}	4, 6	300	333	367	ms	32	Push button test
	T_{PER5}	4, 6	7.2	8.0	8.8	s	768	**RE46C165/7 only** In remote alarm
		4, 6	9.6	10.7	11.7	s	1024	**RE46C166/8 only** In remote alarm
	T_{PER6}	4, 6	38	43	47	s	4096	Chamber test or low battery test, no alarm
Horn Operation (HORNB,HORNS,FEED)								
Alarm On Time	T_{HON1}	8, 9	450	500	550	ms	48	**RE46C165/7 only** Local or remote alarm, **Note 2**
		8, 9	225	250	275	ms	24	**RE46C166/8 only** Local or remote alarm, **Note 3**
Alarm Off Time	T_{HOF1}	8, 9	450	500	550	ms	48	**RE46C165/7 only** Local or remote alarm, **Note 2**
		8, 9	75	83	92	ms	8	**RE46C166/8 only** Local or remote alarm, **Note 3**
	T_{HOF2}	8, 9	1.35	1.50	1.65	s	144	**RE46C165/7 only** Local or remote alarm, **Note 2**
Alarm Period	T_{HPER1}	8, 9	3.60	4.00	4.40	s	384	**RE46C165/7 only** Local or remote alarm, **Note 2**
		8, 9	0.30	0.33	0.37	s	32	**RE46C166/8 only** Local or remote alarm, **Note 3**
Low Battery or Chamber Fail Horn On Time	T_{HON2}	8, 9	9.4	10.4	11.5	ms	1	Low battery or fail chamber test, no alarm

Note 1: T_{POSC} and T_{IRON} are 100% production tested. All other timing is verified by functional testing.

2: See timing diagram for Horn Temporal Pattern in Figure 3-2.

3: See timing diagram for Horn Continuous Pattern in Figure 3-3.

4: During Timer mode, the LED Period is 10.5 seconds. The LED period will return to 43 seconds at the conclusion of the Timer mode.

© 2010 Microchip Technology Inc.

AC ELECTRICAL CHARACTERISTICS (CONTINUED)

AC Electrical Characteristics: Unless otherwise indicated, all parameters apply at T_A = -25° to 75°, V_{DD} = 9V, Typical Application (unless otherwise noted), V_{SS} = 0V.

Parameter	Symbol	Test Pin	Min	Typ	Max	Units	Clocks	Conditions
Low Battery Horn Off Time	T_{HOF3}	8, 9	38	43	47	s	4095	Low battery, no alarm
Low Battery or Chamber Fail Period	T_{HPER2}	8, 9	38	43	47	s	4096	Low battery, no alarm
Chamber Fail Horn Off Time	T_{HOF4}	8, 9	291	323	355	ms	31	Failed chamber, no alarm
Chamber Fail Pause Off Time	T_{HOF5}	8, 9	38	42	46	s	4031	Failed chamber, no alarm
Push-to-Test Alarm Memory Off Time	T_{HOF6}	8, 9	216	240	264	ms	23	Alarm memory active, push-to-test
Push-to-Test Alarm Memory Period	T_{HPER3}	8, 9	225	250	275	ms	24	Alarm memory active, push-to-test
Interconnect Signal Operation (I/O)								
I/O Active Delay	T_{IODLY1}	7	0.0	0.0	0.0	s	0	Local alarm start to I/O active
Remote Alarm Delay	T_{IODLY2}	7	0.74	0.99	1.27	s	95	**RE46C165/7 only** No local alarm, I/O active to alarm
		7	0.37	0.57	0.81	s	55	**RE46C166/8 only** No local alarm, I/O active to alarm
I/O Charge Dump Duration	T_{IODMP}	7	0.89	0.99	1.09	s	95	**RE46C165/7 only** At conclusion of local alarm or test
		7	1.19	1.32	1.46	s	127	**RE46C166/8 only** At conclusion of local alarm or test
I/O Filter	T_{IOFILT}	7	—	—	0.30	s	32	Maximum I/O pulse width filtered
Hush Timer Operation								
Hush Timer Period	T_{TPER}	—	8.1	9.0	9.9	Min	51712	**RE46C165/6 only** No alarm condition
		—	1.1	1.2	1.4	Min	7232	**RE46C167/8 only** No alarm condition

Note 1: T_{POSC} and T_{IRON} are 100% production tested. All other timing is verified by functional testing.

2: See timing diagram for Horn Temporal Pattern in Figure 3-2.

3: See timing diagram for Horn Continuous Pattern in Figure 3-3.

4: During Timer mode, the LED Period is 10.5 seconds. The LED period will return to 43 seconds at the conclusion of the Timer mode.

TEMPERATURE CHARACTERISTICS

Electrical Specifications: Unless otherwise indicated, V_{DD} = 9V, Typical Application (unless otherwise noted), V_{SS} = 0V						
Parameters	**Sym**	**Min**	**Typ**	**Max**	**Units**	**Conditions**
Temperature Ranges						
Specified Temperature Range	T_A	-25	—	+75	°C	
Operating Temperature Range	T_A	-25	—	+75	°C	
Storage Temperature Range	T_{STG}	-55	—	+125	°C	
Thermal Package Resistances						
Thermal Resistance, 16L-PDIP	θJ_A	—	70	—	°C/W	
Thermal Resistance, 16L-SOIC (150 mil)	θJ_A	—	86.1	—	°C/W	
Thermal Resistance, 16L-SOIC (300 mil)	θJ_A	—	80	—	°C/W	

© 2010 Microchip Technology Inc.

2.0 PIN DESCRIPTIONS

The descriptions of the pins are listed in Table 2-1.

TABLE 2-1: PIN FUNCTION TABLE

RE46C165/6/7/8 PDIP, SOIC	Symbol	Function
1	C1	High Gain Capacitor Pin
2	C2	Normal Gain Capacitor Pin
3	DETECT	Photo Diode Input
4	STROBE	Strobed Detection Negative Supply
5	V_{DD}	Positive Power Supply
6	IRED	Infrared Emitting Diode Pin
7	IO	Interconnect Pin
8	HB	Horn Brass, Inverted Output
9	HS	Horn Silver Output
10	FEED	Horn Feedback Pin
11	LED	LED Driver Pin
12	COSC	Oscillator Capacitor Input
13	ROSC	Oscillator Resistor Drive Low
14	V_{SS}	Negative Power Supply
15	VSEN	Hush Timer Sensitivity Pin
16	TEST	Test Pin

2.1 High/Normal Gain Capacitor Pins (C1, C2)

The capacitor connected to the C1 pin sets the photo amplifier gain (high) for the push-to-test and chamber sensitivity test. The size of this capacitor will depend on the chamber background reflections. A = 1 + (C1/10), where C1 is expressed in pF. The gain should be <10000.

The capacitor connected to the C2 pin sets the photo amplifier gain (normal) during standby. The value of this capacitor will depend on the smoke sensitivity required. A = 1 + (C2/10), where C2 is expressed in pF.

2.2 Photo Diode Input (DETECT)

This input is normally connected to the cathode of an external photo diode operated at zero bias.

2.3 Strobed Detection Negative Supply (STROBE)

Regulated output voltage of V_{DD} – 5, which is active during a test for smoke. This output is the negative side of the photo amplifier reference circuitry.

2.4 Positive Power Supply (V_{DD})

The V_{DD} pin is the device's positive power supply input.

2.5 Infrared Emitting Diode Pin (IRED)

Provides a regulated pulsed output voltage pre-driver for the infrared emitter. This output usually drives the base of an NPN transistor.

2.6 Interconnect Pin (I/O)

This bidirectional pin provides the capability to interconnect many detectors in a single system. This pin has an internal pull-down device.

2.7 Horn Brass, Inverted Output (HB)

The HB pin is connected to the metal electrode of a piezoelectric transducer.

2.8 Horn Silver Output Pin (HS)

The HS pin is a complementary output to HB and connects to the ceramic electrode of the piezoelectric transducer.

© 2010 Microchip Technology Inc.

2.9 Horn Feedback Pin (FEED)

Usually this pin is connected to the feedback electrode through a current limiting resistor. If not used, this pin must be connected to V_{DD} or V_{SS}.

When the horn is enabled, FEED drives the buffered output HS pin and the complementary output HB pin.

2.10 LED Driver Pin (LED)

This pin is an open drain NMOS output used to drive a visible LED.

2.11 Oscillator Capacitor Input (COSC)

A capacitor connected to this pin, with a parallel resistor, sets the internal clock low time, which is approximately the clock period.

2.12 Oscillator Resistor Drive Low (ROSC)

A resistor between this pin and COSC pin sets the internal clock high time. This also sets the IRED pulse width.

2.13 Hush Timer Sensitivity Pin (VSEN)

In Timer mode, this input pin can be used to set an external smoke comparator reference.

2.14 TEST Pin

This input is used to invoke two test modes and the Timer mode. This input has an internal pull-down.

© 2010 Microchip Technology Inc.

3.0 DEVICE DESCRIPTION

3.1 Internal Timing

With the external components specified in the **Typical Application** for ROSC and COSC, the internal oscillator has a nominal period of 10 ms. Normally the analog circuitry is powered down to minimize standby current (typically 4 µA at 9V). Once every 10 seconds the detection circuitry (normal gain) is powered up for 10 ms. Prior to completion of the 10 ms period, the IRED pulse is active for 100 µs. At the conclusion of the 10 ms period, the photo amplifier is compared to an internal reference to determine the chamber status and latched. If a smoke condition is present, the period to the next detection decreases and additional checks are made. Three consecutive smoke detections will cause the device to go into alarm, and the horn circuit and interconnect will be active.

Once every 43 seconds, the status of the battery voltage is checked. This status is checked and latched at the conclusion of the LED pulse. In addition, once every 43 seconds, the chamber is activated and, using the high gain mode (capacitor C1), a check of the chamber is made by amplifying background reflections. If either the low battery or the photo chamber test fails, the horn will chirp for 10 ms every 43 seconds.

The oscillator period is determined by the values of R9, R12 and C5 (see the **Typical Application** figure). The oscillator period is as follows:

EQUATION 3-1:

$$T = TR + TF$$

Where:

$$TR = .693 * R12 * C5$$

$$TF = .693 * R9 * C5$$

3.2 Smoke Detection Circuit

A comparator compares the photo amplifier output to an internal reference voltage. If the required number of consecutive smoke conditions is met, the device will go into local alarm and the horn will be active. In local alarm, the C2 gain is internally increased by approximately 10% to provide alarm hysteresis.

3.3 Push-to-Test Operation

If the TEST input pin is activated (V_{IH4}), the smoke detection is sampled at a high rate. The RE46C166/8 device samples at a period of 330 ms. The RE46C165/7 device has a first sample delay of up to 330 ms. After one sample, the smoke detection rate increases to once every 250 ms. In this mode the high gain capacitor C1 is selected, and background reflections are used to simulate a smoke condition. After the required three consecutive detections, the device will go into a local alarm condition. When the TEST input is deactivated (V_{IL4}) and after one clock cycle, the normal gain capacitor C2 is selected. The detection rate continues once every 330 ms for the RE46C166/8, and every 250 ms while the horn is not sounding for the RE46C165/7. When three consecutive no smoke conditions are detected, the device returns to standby timing.

Push-to-test will not work while the alarm memory is set. The alarm memory notification will be activated instead.

3.4 LED Pulse

In standby, the LED is pulsed on for 10 ms, every 43 seconds. In a local alarm condition or the push-to-test alarm, the LED pulse frequency is increased once every.5 seconds. In the case of a remote alarm, the LED is not active. In the Timer mode of operation, the LED is pulsed on for 10 ms every 10 seconds.

3.5 Interconnect

The bidirectional I/O pin allows the interconnection of multiple detectors. In a local alarm condition, this pin is driven high immediately through a constant current source. Shorting this output to ground will not cause excessive current. The I/O is ignored as an input during a local alarm.

The I/O pin has a 280k nominal pull-down resistor, so the pin may be left unconnected.

The I/O pin also has an NMOS discharge device that is active for 1 second after the conclusion of any type of local alarm. This device helps to quickly discharge any capacitance associated with the interconnect line.

If a remote active high signal is detected, the device goes into remote alarm and the horn will be active. Internal protection circuitry allows for the signaling unit to have a higher supply voltage than the signaled unit, without excessive current draw.

The interconnect input has a digital filter that ensures filtering out pulses of up to 300 ms. Filter pulses will be ignored and not affect internal timing of the part. This allows for interconnection to other types of alarms (carbon monoxide for example) that may have a pulsed interconnect signal.

The remote alarm delay (370 ms to 1.27s) specifies the time from the interconnect going active to sounding the piezo horn alarm.

© 2010 Microchip Technology Inc.

3.6 Low Battery Detection

In standby, an internal reference is compared to the voltage divided V_{DD} supply. A low battery status is latched at the conclusion of the LED pulse. The horn will chirp once for 10 ms every 43 seconds, until the low battery condition no longer exists. The low battery chirp occurs next to the LED pulse.

The low battery notification does not sound in a local or remote alarm condition.

3.7 Chamber Fail Detection

In standby, a chamber test is also performed every 43 seconds, by switching to the high gain capacitor C1 and sensing the photo chamber background reflections. Two consecutive chamber test failures will cause the horn to chirp 3 times for 10 ms spaced 323 ms apart. This will repeat every 42 seconds, as long as a chamber test fail exists. The failed chamber test chirps occur ~21 seconds after the LED pulse in Standby mode (not hush).

The chamber fail notification does not sound in a local or remote alarm condition.

3.8 Timer Mode

If resistors R_{ADJ1} and R_{ADJ2} (see **Typical Application** figure) are in place and a high-to-low transition occurs on the TEST input, the device enters a timer mode (10 minutes maximum for RE46C165/6 devices, 1 minute maximum for RE46C167/8). In this mode, the smoke comparator reference is switched from the internal V_{DD} – 3.5V reference to the voltage that appears on VSEN. This allows the sensitivity to be modified for the duration of the timer period. High gain operations (push-to-test and chamber test) always use the internal V_{DD} – 3.5V reference. The chamber test is performed in Timer mode.

If VSEN is left unconnected or tied to V_{SS}, the Hush Timer mode operation is inhibited.

If the smoke level causes the reduced sensitivity set point to be exceeded during this timer period, the unit will go into a local alarm condition, the horn will sound, and the Timer mode is cancelled. If an external only alarm occurs during the Timer mode, the Timer mode is cancelled.

If the test button is pushed in a standby, reduced sensitivity mode, the unit is tested normally. Upon release of the test button, the 10 minute maximum timer mode counter is reset and restarted.

3.9 Alarm Memory

If a detector has entered a local alarm, when exiting that local alarm, the alarm memory latch is set. Initially the LED can be used to visually identify any unit that had previously been in a local alarm condition. The LED will flash 3 times spaced 1.3 seconds apart. This pattern will repeat every 43 seconds. The duration of the flash is 10 ms. In order to conserve battery power, this visual indication will stop after a period of 24 hours. The user will always be able to identify a unit with an active alarm memory by pressing the push-to-test button. When this button is active, the horn will chirp and the LED will pulse on for 10 ms every 250 ms. The push-to-test alarm will not activate until the alarm memory is reset.

If the alarm memory condition is set, any time the push-to-test button is pressed and then released, the alarm memory latch is reset.

The initial 24 hour visual indication is not displayed if a low battery condition exits.

3.10 Diagnostic Mode

In addition to the normal function of the TEST input, a special diagnostic mode is available to calibrate and test the smoke detector. Taking the TEST pin below V_{SS} and sourcing ~200 µA out of the pin for 1 clock cycle will enable the diagnostic mode. In the diagnostic mode, some of the pin functions are redefined. Refer to Table 3-1 below for redefined pin functions in the diagnostic mode. In addition, in this mode STROBE is always enabled, and the IRED is pulsed at the clock rate of 10 ms nominal.

© 2010 Microchip Technology Inc.

TABLE 3-1: DIAGNOSTIC MODE PIN FUNCTION

Pin Name	Pin Number	Function
I/O	7	Disabled as an output. A high on this pin directs the photo amplifier output to pin C1 or C2, determined by the level on VSEN. Amplification occurs during the IRED active time.
VSEN	15	If I/O is high, then this pin controls the gain capacitor that is used. If VSEN is low, the normal gain is selected and the photo amplifier output appears on C1. If VSEN is high, high gain is selected, and the photo amplifier output is on C2.
FEED	10	If VSEN is low, then taking this input high will enable hysteresis, which is a nominal 10% gain increase in normal gain mode.
COSC	12	If desired, this pin can be driven by an external clock.
HORNB	8	This pin becomes the smoke integrator output. A high level indicates that an alarm condition has been detected.
LED	11	The LED pin is used as a low battery indicator. For V_{DD} above the low battery threshold, the open drain NMOS is off. If V_{DD} falls below the threshold, the NMOS turns on.

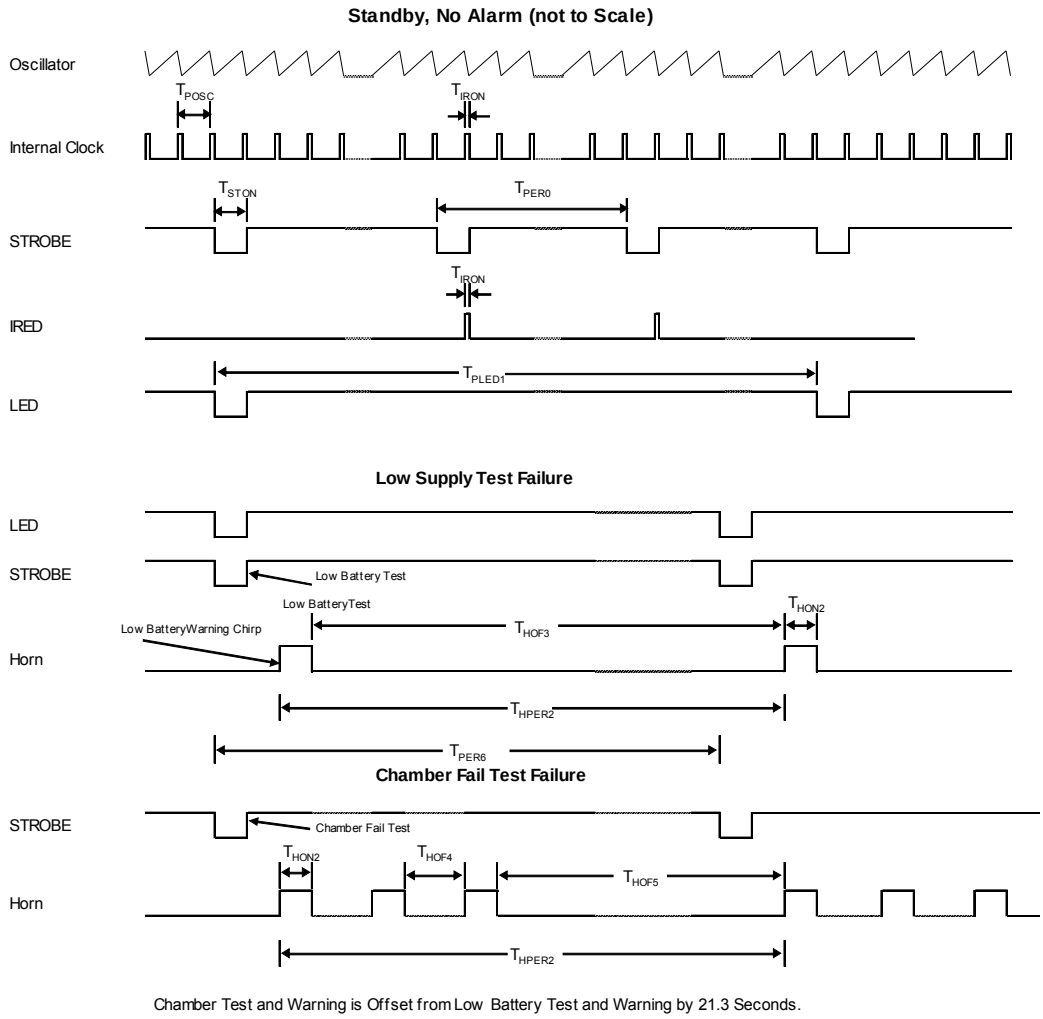

FIGURE 3-1: *RE46C165/6/7/8 Timing Diagram – Standby, Low Battery, Chamber Fail.*

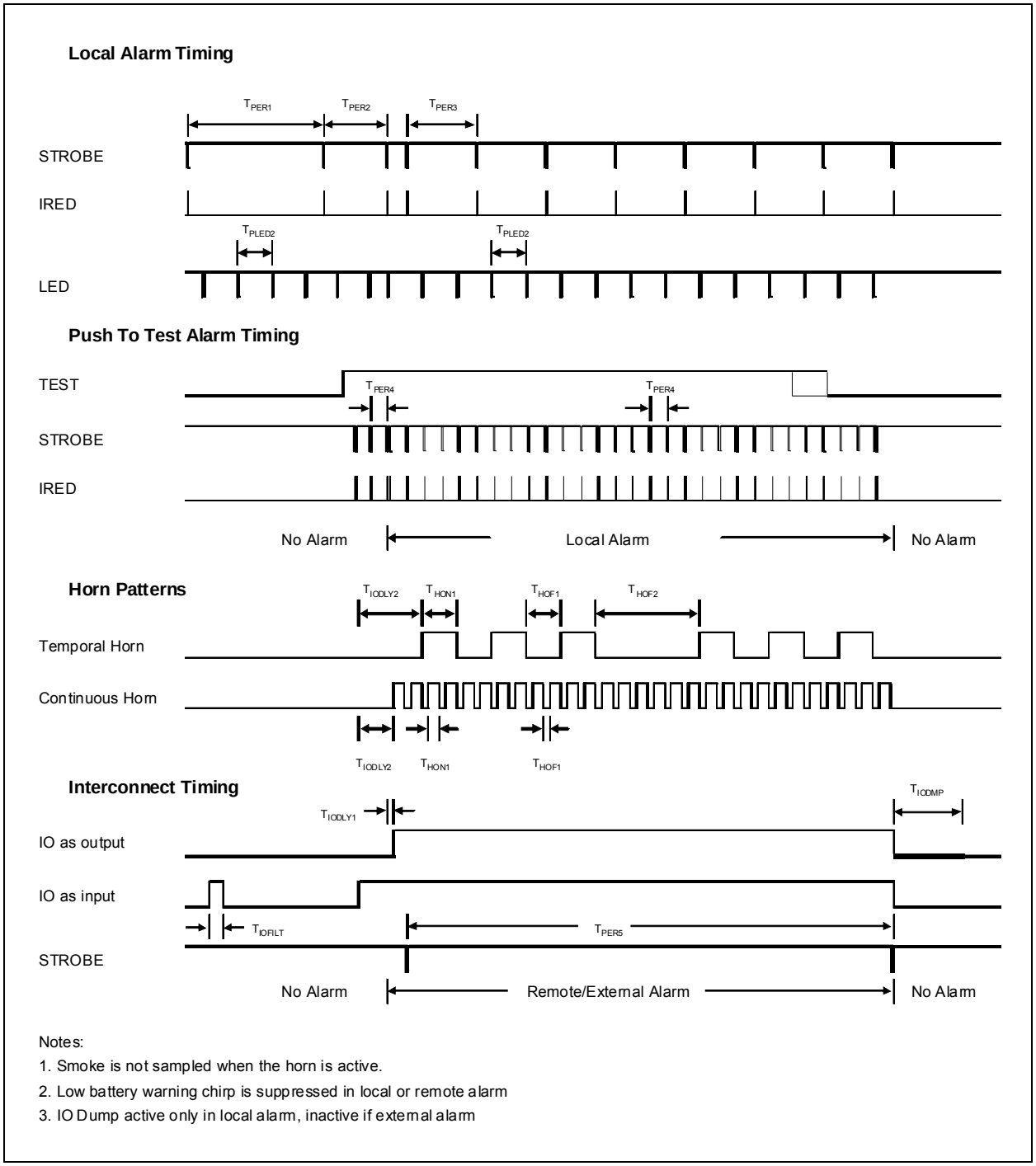

Notes:
1. Smoke is not sampled when the horn is active.
2. Low battery warning chirp is suppressed in local or remote alarm
3. IO Dump active only in local alarm, inactive if external alarm

FIGURE 3-2: *RE46C165/6/7/8 Timing Diagram – Local and Remote Alarm.*

© 2010 Microchip Technology Inc.

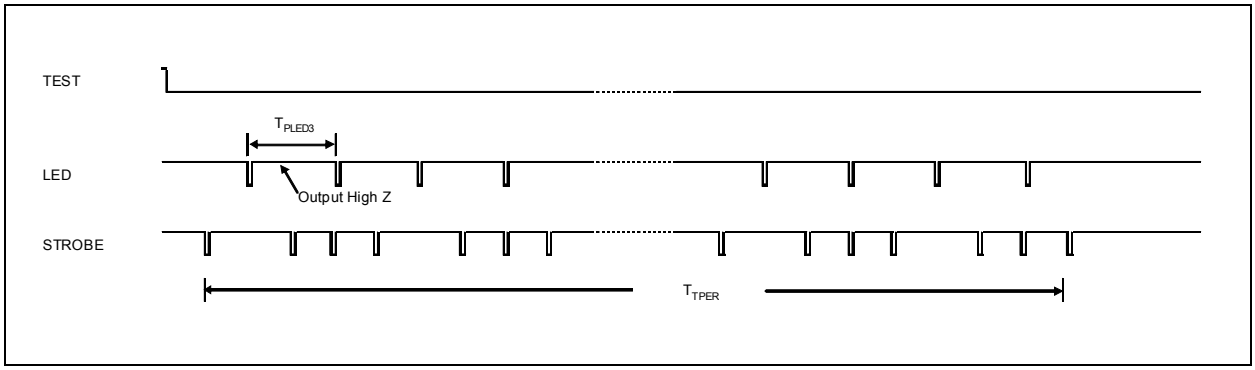

FIGURE 3-3: *RE46C165/6/7/8 Timing Diagram – Timer Mode.*

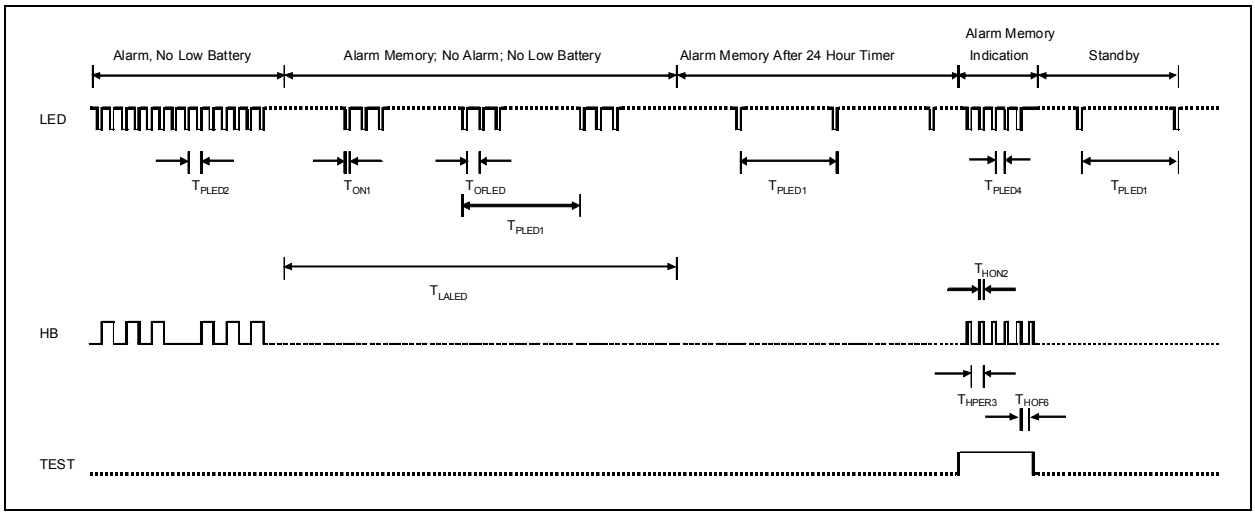

FIGURE 3-4: *RE46C165/7 Timer Diagram – Alarm Memory Mode.*

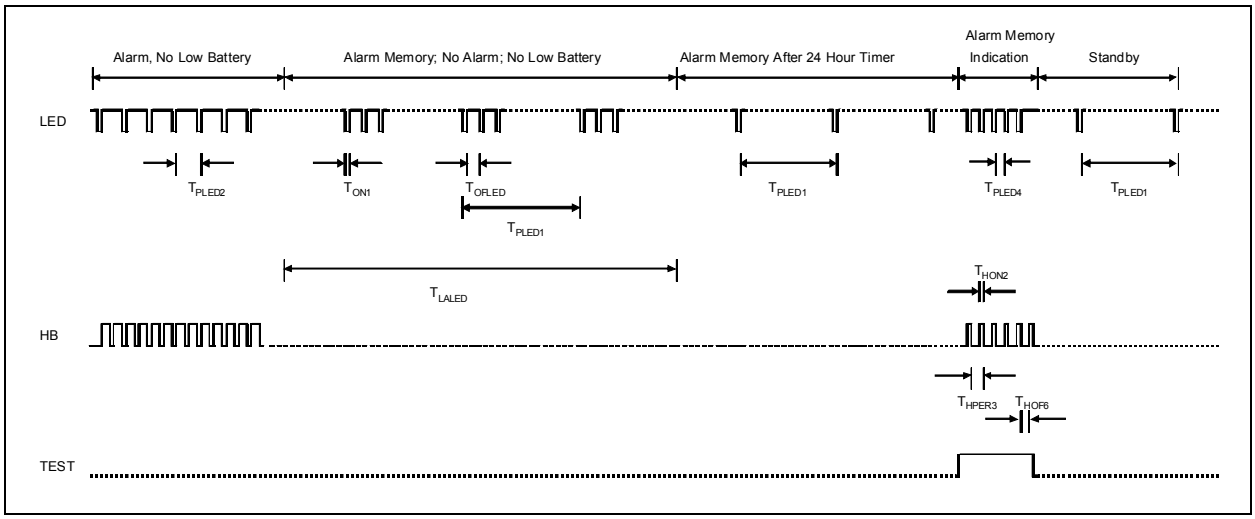

FIGURE 3-5: *RE46C166/8 Timer Diagram – Alarm Memory Mode.*

NOTES:

© 2010 Microchip Technology Inc.

4.0 PACKAGING INFORMATION

4.1 Package Marking Information

16-Lead PDIP

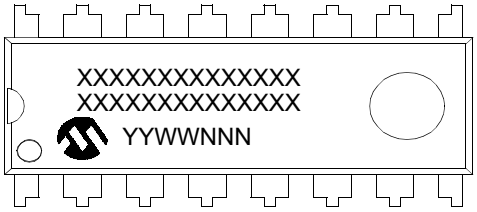

Example

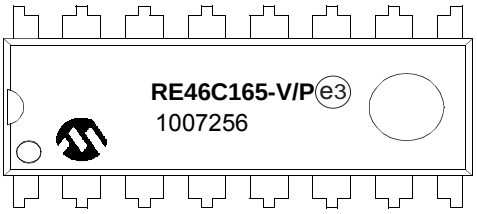

16-Lead SOIC (150 mil.)

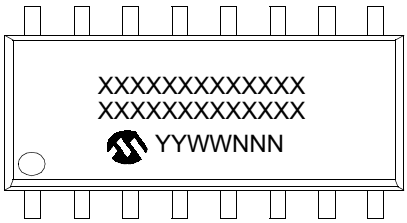

Example

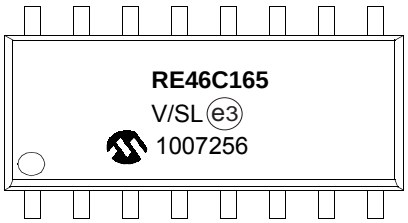

16-Lead SOIC (300 mil.)

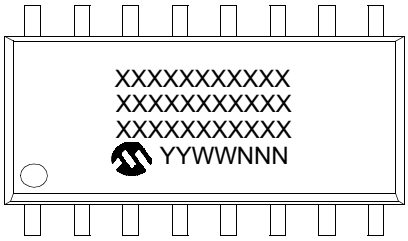

Example

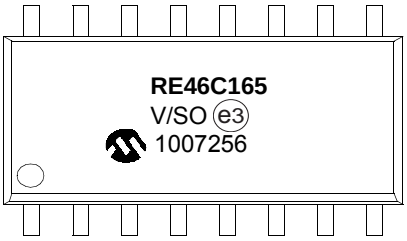

Legend:	XX...X	Customer-specific information
	Y	Year code (last digit of calendar year)
	YY	Year code (last 2 digits of calendar year)
	WW	Week code (week of January 1 is week ‘01’)
	NNN	Alphanumeric traceability code
	e3	Pb-free JEDEC designator for Matte Tin (Sn)
	*	This package is Pb-free. The Pb-free JEDEC designator (e3) can be found on the outer packaging for this package.

Note: In the event the full Microchip part number cannot be marked on one line, it will be carried over to the next line, thus limiting the number of available characters for customer-specific information.

16-Lead Plastic Dual In-Line (P) – 300 mil Body [PDIP]

Note: For the most current package drawings, please see the Microchip Packaging Specification located at http://www.microchip.com/packaging

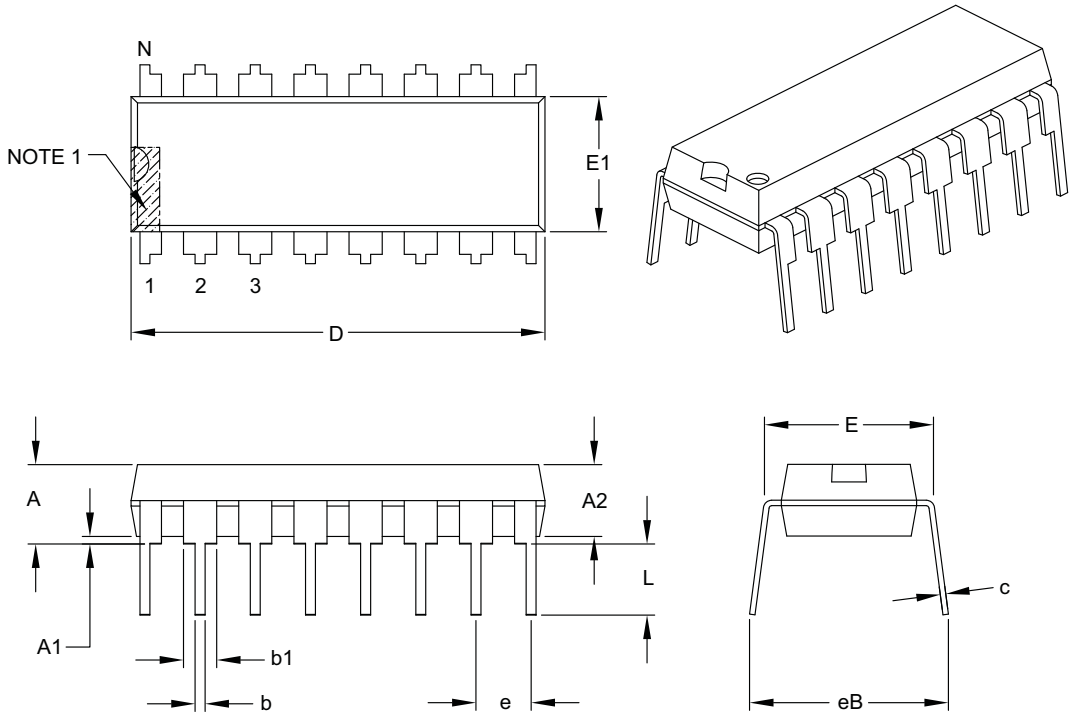

Units		INCHES		
Dimension Limits		MIN	NOM	MAX
Number of Pins	N	16		
Pitch	e	.100 BSC		
Top to Seating Plane	A	–	–	.210
Molded Package Thickness	A2	.115	.130	.195
Base to Seating Plane	A1	.015	–	–
Shoulder to Shoulder Width	E	.290	.310	.325
Molded Package Width	E1	.240	.250	.280
Overall Length	D	.735	.755	.775
Tip to Seating Plane	L	.115	.130	.150
Lead Thickness	c	.008	.010	.015
Upper Lead Width	b1	.045	.060	.070
Lower Lead Width	b	.014	.018	.022
Overall Row Spacing §	eB	–	–	.430

Notes:

1. Pin 1 visual index feature may vary, but must be located within the hatched area.
2. § Significant Characteristic.
3. Dimensions D and E1 do not include mold flash or protrusions. Mold flash or protrusions shall not exceed .010" per side.
4. Dimensioning and tolerancing per ASME Y14.5M.

   BSC: Basic Dimension. Theoretically exact value shown without tolerances.

Microchip Technology Drawing C04-017B

© 2010 Microchip Technology Inc.

16-Lead Plastic Small Outline (SL) – Narrow, 3.90 mm Body [SOIC]

Note: For the most current package drawings, please see the Microchip Packaging Specification located at http://www.microchip.com/packaging

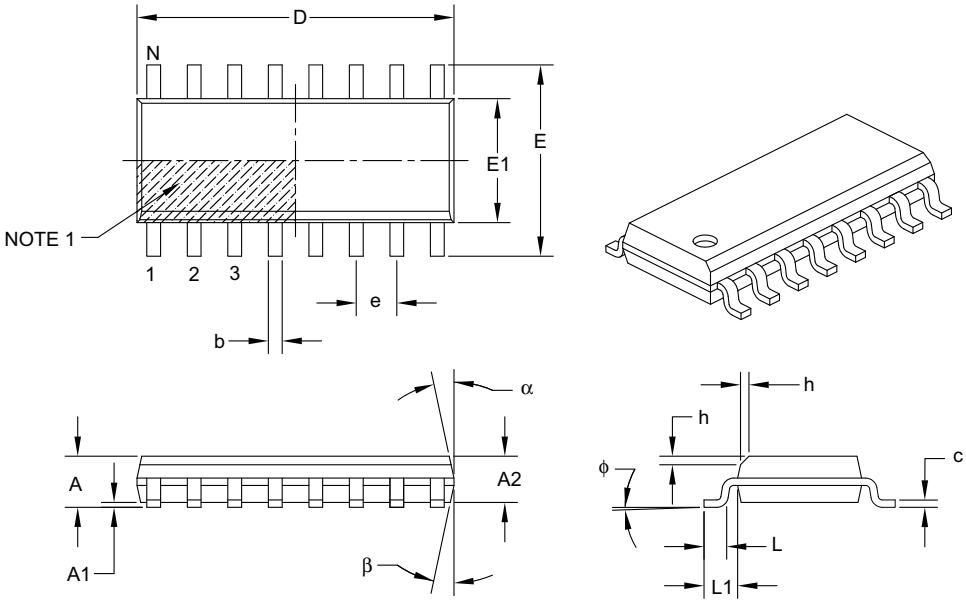

Units		MILLIMETERS		
Dimension Limits		MIN	NOM	MAX
Number of Pins	N	16		
Pitch	e	1.27 BSC		
Overall Height	A	–	–	1.75
Molded Package Thickness	A2	1.25	–	–
Standoff §	A1	0.10	–	0.25
Overall Width	E	6.00 BSC		
Molded Package Width	E1	3.90 BSC		
Overall Length	D	9.90 BSC		
Chamfer (optional)	h	0.25	–	0.50
Foot Length	L	0.40	–	1.27
Footprint	L1	1.04 REF		
Foot Angle	ϕ	0°	–	8°
Lead Thickness	c	0.17	–	0.25
Lead Width	b	0.31	–	0.51
Mold Draft Angle Top	α	5°	–	15°
Mold Draft Angle Bottom	β	5°	–	15°

Notes:

1. Pin 1 visual index feature may vary, but must be located within the hatched area.
2. § Significant Characteristic.
3. Dimensions D and E1 do not include mold flash or protrusions. Mold flash or protrusions shall not exceed 0.15 mm per side.
4. Dimensioning and tolerancing per ASME Y14.5M.

   BSC: Basic Dimension. Theoretically exact value shown without tolerances.

   REF: Reference Dimension, usually without tolerance, for information purposes only.

Microchip Technology Drawing C04-108B

16-Lead Plastic Small Outline (SL) - Narrow, 3.90 mm Body [SOIC]

Note: For the most current package drawings, please see the Microchip Packaging Specification located at http://www.microchip.com/packaging

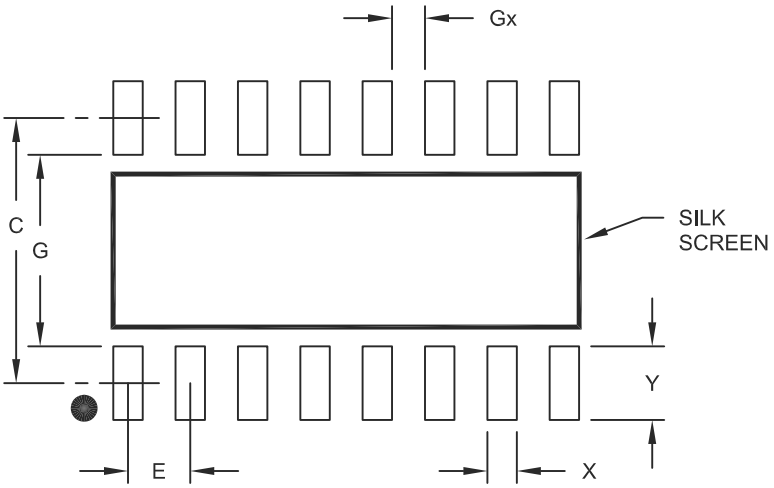

RECOMMENDED LAND PATTERN

Units		MILLIMETERS		
Dimension Limits		MIN	NOM	MAX
Contact Pitch	E	1.27 BSC		
Contact Pad Spacing	C		5.40	
Contact Pad Width	X			0.60
Contact Pad Length	Y			1.50
Distance Between Pads	Gx	0.67		
Distance Between Pads	G	3.90		

Notes:

1. Dimensioning and tolerancing per ASME Y14.5M
   BSC: Basic Dimension. Theoretically exact value shown without tolerances.

Microchip Technology Drawing No. C04-2108A

© 2010 Microchip Technology Inc.

16-Lead Plastic Small Outline (SO) – Wide, 7.50 mm Body [SOIC]

Note: For the most current package drawings, please see the Microchip Packaging Specification located at http://www.microchip.com/packaging

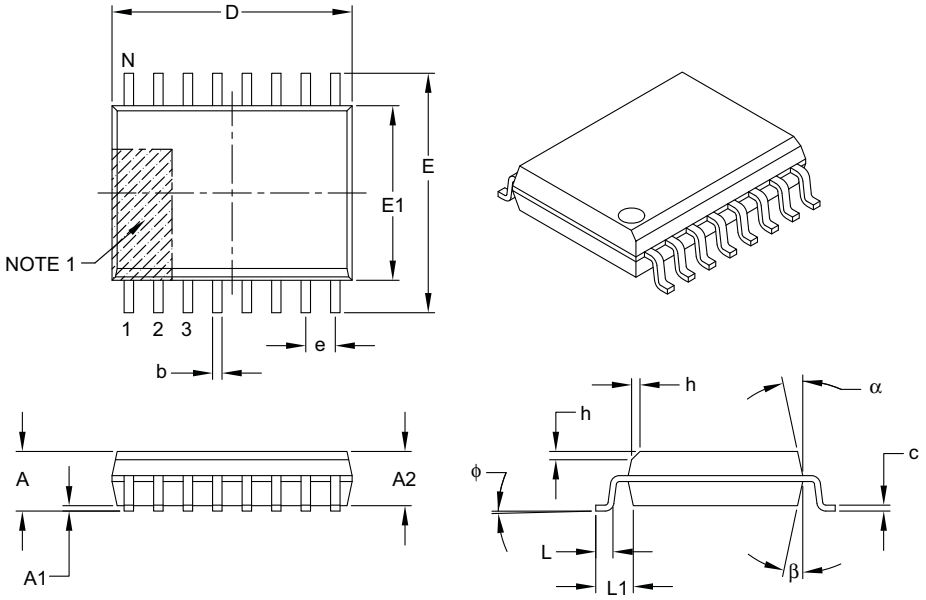

Units		MILLIMETERS		
Dimension Limits		MIN	NOM	MAX
Number of Pins	N	16		
Pitch	e	1.27 BSC		
Overall Height	A	–	–	2.65
Molded Package Thickness	A2	2.05	–	–
Standoff §	A1	0.10	–	0.30
Overall Width	E	10.30 BSC		
Molded Package Width	E1	7.50 BSC		
Overall Length	D	10.30 BSC		
Chamfer (optional)	h	0.25	–	0.75
Foot Length	L	0.40	–	1.27
Footprint	L1	1.40 REF		
Foot Angle	ϕ	0°	–	8°
Lead Thickness	c	0.20	–	0.33
Lead Width	b	0.31	–	0.51
Mold Draft Angle Top	α	5°	–	15°
Mold Draft Angle Bottom	β	5°	–	15°

Notes:

1. Pin 1 visual index feature may vary, but must be located within the hatched area.
2. § Significant Characteristic.
3. Dimensions D and E1 do not include mold flash or protrusions. Mold flash or protrusions shall not exceed 0.15 mm per side.
4. Dimensioning and tolerancing per ASME Y14.5M.

   BSC: Basic Dimension. Theoretically exact value shown without tolerances.

   REF: Reference Dimension, usually without tolerance, for information purposes only.

Microchip Technology Drawing C04-102B

16-Lead Plastic Small Outline (SO) – Wide, 7.50 mm Body [SOIC] Land Pattern

Note: For the most current package drawings, please see the Microchip Packaging Specification located at http://www.microchip.com/packaging

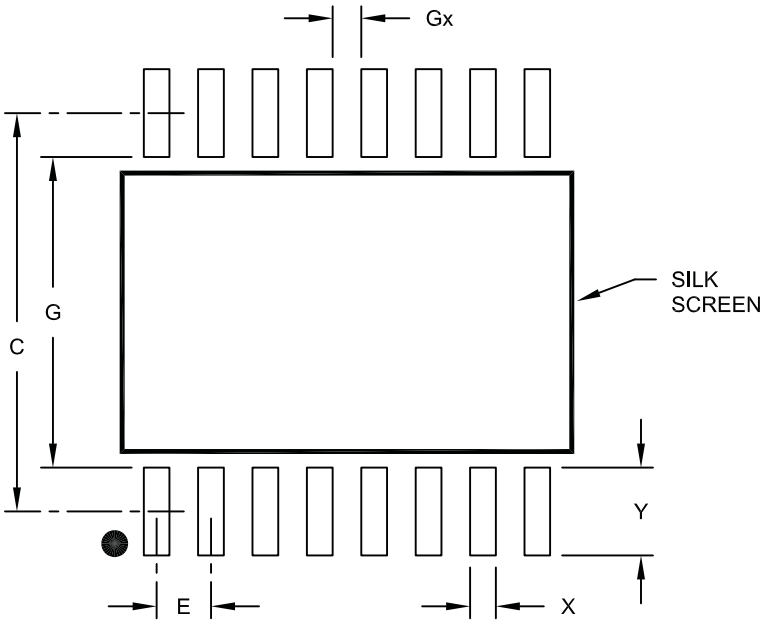

RECOMMENDED LAND PATTERN

Units		MILLIMETERS		
Dimension Limits		MIN	NOM	MAX
Contact Pitch	E	1.27 BSC		
Contact Pad Spacing	C		9.30	
Contact Pad Width	X			0.60
Contact Pad Length	Y			2.05
Distance Between Pads	Gx	0.67		
Distance Between Pads	G	7.25		

Notes:

1. Dimensioning and tolerancing per ASME Y14.5M
   BSC: Basic Dimension. Theoretically exact value shown without tolerances.

Microchip Technology Drawing No. C04-2102A

© 2010 Microchip Technology Inc.

APPENDIX A: REVISION HISTORY

Revision A (May 2010)

- Original Release of this Document.

NOTES:

© 2010 Microchip Technology Inc.

PRODUCT IDENTIFICATION SYSTEM

To order or obtain information, e.g., on pricing or delivery, refer to the factory or the listed sales office.

PART NO. **/X** **XX**

Device **Package** **Number of Pins**

Device	RE46C165:	CMOS Photoelectric Smoke Detector ASIC	
	RE46C165T:	CMOS Photoelectric Smoke Detector ASIC (Tape and Reel, SOIC only)	
	RE46C165/7:	CMOS Photoelectric Smoke Detector ASIC	
	RE46C165/7T:	CMOS Photoelectric Smoke Detector ASIC (Tape and Reel, SOIC only)	
	RE46C166/8:	CMOS Photoelectric Smoke Detector ASIC	
	RE46C166/8T:	CMOS Photoelectric Smoke Detector ASIC (Tape and Reel, SOIC only)	
	RE46C165/6:	CMOS Photoelectric Smoke Detector ASIC	
	RE46C165/6T:	CMOS Photoelectric Smoke Detector ASIC (Tape and Reel, SOIC only)	
Package	E	=	Plastic Dual In-Line, 300 mil. Body, 16-Lead (PDIP)
	S	=	Small Plastic Outline - Narrow, 3.90 mm Body, 16-Lead (SOIC)
	SW	=	Small Plastic Outline - Wide, 7.50 mm Body, 16-Lead (SOIC)

Examples:

a)	RE46C165E16F:	16LD PDIP Package
b)	RE46C165S16F:	16LD SOIC Package
c)	RE46C165S16TF:	16LD SOIC Package, Tape and Reel
d)	RE46C165SW16F:	16LD SOIC Package
e)	RE46C165SW16TF:	16LD SOIC Package, Tape and Reel
a)	RE46C166E16F:	16LD PDIP Package
b)	RE46C166S16F:	16LD SOIC Package
c)	RE46C166S16TF:	16LD SOIC Package, Tape and Reel
d)	RE46C166SW16F:	16LD SOIC Package
e)	RE46C166SW16TF:	16LD SOIC Package, Tape and Reel
a)	RE46C167E16F:	16LD PDIP Package
b)	RE46C167S16F:	16LD SOIC Package
c)	RE46C167S16TF:	16LD SOIC Package, Tape and Reel
d)	RE46C167SW16F:	16LD SOIC Package
e)	RE46C167SW16TF:	16LD SOIC Package, Tape and Reel
a)	RE46C168E16F:	16LD PDIP Package
b)	RE46C168S16F:	16LD SOIC Package
c)	RE46C168S16TF:	16LD SOIC Package, Tape and Reel
d)	RE46C168SW16F:	16LD SOIC Package
e)	RE46C168SW16TF:	16LD SOIC Package, Tape and Reel

NOTES:

© 2010 Microchip Technology Inc.

Note the following details of the code protection feature on Microchip devices:

- Microchip products meet the specification contained in their particular Microchip Data Sheet.
- Microchip believes that its family of products is one of the most secure families of its kind on the market today, when used in the intended manner and under normal conditions.
- There are dishonest and possibly illegal methods used to breach the code protection feature. All of these methods, to our knowledge, require using the Microchip products in a manner outside the operating specifications contained in Microchip's Data Sheets. Most likely, the person doing so is engaged in theft of intellectual property.
- Microchip is willing to work with the customer who is concerned about the integrity of their code.
- Neither Microchip nor any other semiconductor manufacturer can guarantee the security of their code. Code protection does not mean that we are guaranteeing the product as "unbreakable."

Code protection is constantly evolving. We at Microchip are committed to continuously improving the code protection features of our products. Attempts to break Microchip's code protection feature may be a violation of the Digital Millennium Copyright Act. If such acts allow unauthorized access to your software or other copyrighted work, you may have a right to sue for relief under that Act.

Information contained in this publication regarding device applications and the like is provided only for your convenience and may be superseded by updates. It is your responsibility to ensure that your application meets with your specifications. MICROCHIP MAKES NO REPRESENTATIONS OR WARRANTIES OF ANY KIND WHETHER EXPRESS OR IMPLIED, WRITTEN OR ORAL, STATUTORY OR OTHERWISE, RELATED TO THE INFORMATION, INCLUDING BUT NOT LIMITED TO ITS CONDITION, QUALITY, PERFORMANCE, MERCHANTABILITY OR FITNESS FOR PURPOSE**.** Microchip disclaims all liability arising from this information and its use. Use of Microchip devices in life support and/or safety applications is entirely at the buyer's risk, and the buyer agrees to defend, indemnify and hold harmless Microchip from any and all damages, claims, suits, or expenses resulting from such use. No licenses are conveyed, implicitly or otherwise, under any Microchip intellectual property rights.

QUALITY MANAGEMENT SYSTEM
CERTIFIED BY DNV
ISO/TS 16949:2002

Trademarks

The Microchip name and logo, the Microchip logo, dsPIC, KEELOQ, KEELOQ logo, MPLAB, PIC, PICmicro, PICSTART, PIC32 logo, rfPIC and UNI/O are registered trademarks of Microchip Technology Incorporated in the U.S.A. and other countries.

FilterLab, Hampshire, HI-TECH C, Linear Active Thermistor, MXDEV, MXLAB, SEEVAL and The Embedded Control Solutions Company are registered trademarks of Microchip Technology Incorporated in the U.S.A.

Analog-for-the-Digital Age, Application Maestro, CodeGuard, dsPICDEM, dsPICDEM.net, dsPICworks, dsSPEAK, ECAN, ECONOMONITOR, FanSense, HI-TIDE, In-Circuit Serial Programming, ICSP, Mindi, MiWi, MPASM, MPLAB Certified logo, MPLIB, MPLINK, mTouch, Octopus, Omniscient Code Generation, PICC, PICC-18, PICDEM, PICDEM.net, PICkit, PICtail, REAL ICE, rfLAB, Select Mode, Total Endurance, TSHARC, UniWinDriver, WiperLock and ZENA are trademarks of Microchip Technology Incorporated in the U.S.A. and other countries.

SQTP is a service mark of Microchip Technology Incorporated in the U.S.A.

All other trademarks mentioned herein are property of their respective companies.

© 2010, Microchip Technology Incorporated, Printed in the U.S.A., All Rights Reserved.

Printed on recycled paper.

ISBN: 978-1-60932-170-3

Microchip received ISO/TS-16949:2002 certification for its worldwide headquarters, design and wafer fabrication facilities in Chandler and Tempe, Arizona; Gresham, Oregon and design centers in California and India. The Company's quality system processes and procedures are for its PIC® MCUs and dsPIC® DSCs, KEELOQ® code hopping devices, Serial EEPROMs, microperipherals, nonvolatile memory and analog products. In addition, Microchip's quality system for the design and manufacture of development systems is ISO 9001:2000 certified.

WORLDWIDE SALES AND SERVICE

AMERICAS

Corporate Office
2355 West Chandler Blvd.
Chandler, AZ 85224-6199
Tel: 480-792-7200
Fax: 480-792-7277
Technical Support:
http://support.microchip.com
Web Address:
www.microchip.com

Atlanta
Duluth, GA
Tel: 678-957-9614
Fax: 678-957-1455

Boston
Westborough, MA
Tel: 774-760-0087
Fax: 774-760-0088

Chicago
Itasca, IL
Tel: 630-285-0071
Fax: 630-285-0075

Cleveland
Independence, OH
Tel: 216-447-0464
Fax: 216-447-0643

Dallas
Addison, TX
Tel: 972-818-7423
Fax: 972-818-2924

Detroit
Farmington Hills, MI
Tel: 248-538-2250
Fax: 248-538-2260

Kokomo
Kokomo, IN
Tel: 765-864-8360
Fax: 765-864-8387

Los Angeles
Mission Viejo, CA
Tel: 949-462-9523
Fax: 949-462-9608

Santa Clara
Santa Clara, CA
Tel: 408-961-6444
Fax: 408-961-6445

Toronto
Mississauga, Ontario,
Canada
Tel: 905-673-0699
Fax: 905-673-6509

ASIA/PACIFIC

Asia Pacific Office
Suites 3707-14, 37th Floor
Tower 6, The Gateway
Harbour City, Kowloon
Hong Kong
Tel: 852-2401-1200
Fax: 852-2401-3431

Australia - Sydney
Tel: 61-2-9868-6733
Fax: 61-2-9868-6755

China - Beijing
Tel: 86-10-8528-2100
Fax: 86-10-8528-2104

China - Chengdu
Tel: 86-28-8665-5511
Fax: 86-28-8665-7889

China - Chongqing
Tel: 86-23-8980-9588
Fax: 86-23-8980-9500

China - Hong Kong SAR
Tel: 852-2401-1200
Fax: 852-2401-3431

China - Nanjing
Tel: 86-25-8473-2460
Fax: 86-25-8473-2470

China - Qingdao
Tel: 86-532-8502-7355
Fax: 86-532-8502-7205

China - Shanghai
Tel: 86-21-5407-5533
Fax: 86-21-5407-5066

China - Shenyang
Tel: 86-24-2334-2829
Fax: 86-24-2334-2393

China - Shenzhen
Tel: 86-755-8203-2660
Fax: 86-755-8203-1760

China - Wuhan
Tel: 86-27-5980-5300
Fax: 86-27-5980-5118

China - Xian
Tel: 86-29-8833-7252
Fax: 86-29-8833-7256

China - Xiamen
Tel: 86-592-2388138
Fax: 86-592-2388130

China - Zhuhai
Tel: 86-756-3210040
Fax: 86-756-3210049

ASIA/PACIFIC

India - Bangalore
Tel: 91-80-3090-4444
Fax: 91-80-3090-4123

India - New Delhi
Tel: 91-11-4160-8631
Fax: 91-11-4160-8632

India - Pune
Tel: 91-20-2566-1512
Fax: 91-20-2566-1513

Japan - Yokohama
Tel: 81-45-471- 6166
Fax: 81-45-471-6122

Korea - Daegu
Tel: 82-53-744-4301
Fax: 82-53-744-4302

Korea - Seoul
Tel: 82-2-554-7200
Fax: 82-2-558-5932 or
82-2-558-5934

Malaysia - Kuala Lumpur
Tel: 60-3-6201-9857
Fax: 60-3-6201-9859

Malaysia - Penang
Tel: 60-4-227-8870
Fax: 60-4-227-4068

Philippines - Manila
Tel: 63-2-634-9065
Fax: 63-2-634-9069

Singapore
Tel: 65-6334-8870
Fax: 65-6334-8850

Taiwan - Hsin Chu
Tel: 886-3-6578-300
Fax: 886-3-6578-370

Taiwan - Kaohsiung
Tel: 886-7-536-4818
Fax: 886-7-536-4803

Taiwan - Taipei
Tel: 886-2-2500-6610
Fax: 886-2-2508-0102

Thailand - Bangkok
Tel: 66-2-694-1351
Fax: 66-2-694-1350

EUROPE

Austria - Wels
Tel: 43-7242-2244-39
Fax: 43-7242-2244-393

Denmark - Copenhagen
Tel: 45-4450-2828
Fax: 45-4485-2829

France - Paris
Tel: 33-1-69-53-63-20
Fax: 33-1-69-30-90-79

Germany - Munich
Tel: 49-89-627-144-0
Fax: 49-89-627-144-44

Italy - Milan
Tel: 39-0331-742611
Fax: 39-0331-466781

Netherlands - Drunen
Tel: 31-416-690399
Fax: 31-416-690340

Spain - Madrid
Tel: 34-91-708-08-90
Fax: 34-91-708-08-91

UK - Wokingham
Tel: 44-118-921-5869
Fax: 44-118-921-5820

01/05/10

© 2010 Microchip Technology Inc.

Мы молодая и активно развивающаяся компания в области поставок электронных компонентов. Мы поставляем электронные компоненты отечественного и импортного производства напрямую от производителей и с крупнейших складов мира.

Благодаря сотрудничеству с мировыми поставщиками мы осуществляем комплексные и плановые поставки широчайшего спектра электронных компонентов.

Собственная эффективная логистика и склад в обеспечивает надежную поставку продукции в точно указанные сроки по всей России.

Мы осуществляем техническую поддержку нашим клиентам и предпродажную проверку качества продукции. На все поставляемые продукты мы предоставляем гарантию .

Осуществляем поставки продукции под контролем ВП МО РФ на предприятия военно-промышленного комплекса России , а также работаем в рамках 275 ФЗ с открытием отдельных счетов в уполномоченном банке. Система менеджмента качества компании соответствует требованиям ГОСТ ISO 9001.

Минимальные сроки поставки, гибкие цены, неограниченный ассортимент и индивидуальный подход к клиентам являются основой для выстраивания долгосрочного и эффективного сотрудничества с предприятиями радиоэлектронной промышленности, предприятиями ВПК и научно-исследовательскими институтами России.

С нами вы становитесь еще успешнее!

Наши контакты:

Телефон: +7 812 627 14 35

Электронная почта: sales@st-electron.ru

Адрес: 198099, Санкт-Петербург, Промышленная ул, дом № 19, литера Н, помещение 100-Н Офис 331