Demo Circuit 1217
QUICK START GUIDE

LTC3230
5-LED Main/Sub Display Driver with Dual LDO

DESCRIPTION

WARNING!

Do not look directly at operating LED.
This circuit produces light that can damage eyes.

Demonstration circuit 1217 is a 5-LED Main/Sub Display Driver with Dual LDO featuring the LTC3230.

The LTC3230 is a low noise charge pump DC/DC converter designed to drive a four LED Main display and a one LED Sub display via a single wire interface. The LTC3230 also contains two 200mA Low Dropout (LDO) linear regulators, each with three selectable preset output voltages and independent enable pins.

The charge pump only requires four external capacitors and the program resistor to form a complete LED power supply and current controller. The program resistor sets the maximum LED current. There are 32 dimming states available for the Main and Sub displays. The charge pump efficiency is optimized by sensing the voltage across the LED current sources and automatically switching to 1.5x mode, and subsequently 2x mode, whenever an LED current source approaches dropout.

Design files for this circuit board are available. Call the LTC factory.

LT, LTC, and LT are trademarks of Linear Technology Corporation. Other product names may be trademarks of the companies that manufacture the products.

PERFORMANCE SUMMARY

Specifications are at T_A = 25°C

PARAMETER	CONDITIONS	MIN	TYP	MAX	UNITS
Input Supply Range		2.7		5.5	V
LDO1 Output Voltage	V1 Jumper, JP1 = 1.8V, ENLDO1 Jumper, JP3 = HI, I_{LOAD} <= 200mA		1.8		V
	V1 Jumper, JP1 = 1.5V, ENLDO1 Jumper, JP3 = HI, I_{LOAD} <= 200mA		1.5		
	V1 Jumper, JP1 = 1.2V, ENLDO1 Jumper, JP3 = HI, I_{LOAD} <= 200mA		1.2		
LDO2 Output Voltage	V2 Jumper, JP2 = 3.3V, ENLDO2 Jumper, JP4 = HI, I_{LOAD} <= 200mA, VIN => 3.55V		3.3		V
	V2 Jumper, JP2 = 2.8V, ENLDO2 Jumper, JP4 = HI, I_{LOAD} <= 200mA, VIN => 3.05V		2.8		
	V2 Jumper, JP2 = 1.8V, ENLDO2 Jumper, JP4 = HI, I_{LOAD} <= 200mA		1.8		
CPO Output Voltage	1x Mode, I_{CPO} = 0mA		VIN		V
	1.5x Mode, I_{CPO} = 0mA		4.55		
	2x Mode, I_{CPO} = 0mA		5.05		
VIN Shutdown Current	VIN = 3.6V, ENM = ENS = ENLDO1 = ENLDO2 = LOW		3	7	µA
LED Current Ratio (I_{LED}/I_{RSET})			545		A/A
LED Dropout Voltage	VIN = 3.6V, I_{LED} = 15mA		100		mV
I_{LED} Main/Sub LEDs	RSET = 1.74K, 1 ENM/ENS Strobe (FS)		25		mA
	RSET = 1.74K, 31 ENM/ENS Strobes (FS/31)		0.806		mA

OPERATING PRINCIPLES

The maximum LED currents are set with a 17.4KΩ resistor for the Main and Sub displays. Current for each LED is controlled with a precision internal current source driven by a 5-bit linear DAC. The intensity

of the displays are adjusted by strobing the ENM and ENS pins. See the LTC3230 data sheet for more information on this process. The DC1217 uses a PIC micro-controller to interpret commands sent by the DC590 board via a 2-wire I^2C serial interface. The micro-controller then sets the LED displays by strobing the ENM and ENS pins appropriately. An external pulse generator may also be used to control the ENM and ENS pin by setting the ENM Control jumper (JP5) and ENS Control Jumper (JP6) to external and connecting a pulse generator to the EXT ENM and EXT ENS terminals.

LDO1 and LDO2 may be enabled by setting the ENLDO1 jumper (JP3) and the ENLDO2 jumper (JP4) to the HI position. The LDO output voltages are selected by setting the output voltage jumpers V1 (JP1) and V2 (JP2) to the desired voltages.

QUICK START PROCEDURE

Demonstration circuit 1217 is easy to set up to evaluate the performance of the LTC3230. Refer to Figure 1 for proper measurement equipment setup and follow the procedure below:

NOTE. When measuring the input or output voltage ripple, care must be taken to avoid a long ground lead on the oscilloscope probe. Measure the input or output voltage ripple by touching the probe tip directly across the VIN or LDO and GND terminals. See Figure 2 for proper scope probe technique.

1. Place jumpers in the following positions:

JP1 V1: 1.8V

JP2 V2: 3.3V

JP3 ENLDO1: LO

JP4 ENLDO2: LO

JP5 ENM CONTROL: DC590

JP6 ENS CONTROL: DC590

2. With power off, connect the input power supply to the VIN and GND terminals.

3. Refer to the DC590 Quick Start guide for QuikEval™ setup and software installation details.

4. Make sure the USB cable is connected between the computer and the DC590 controller board.

5. Connect DC1217 to the DC590 USB Serial Controller using the supplied 14-conductor ribbon cable as shown in Figure 1.

6. Turn on the power at the input.

NOTE. Make sure that the input voltage does not exceed 6V.

7. Run the QuikEval program. The program detects the DC1217 and displays the LTC3230 control window (shown in Figure 3).

8. Check that the voltages at LDO1 and LDO2 are equal to 0V.

9. Move the ENLDO1 jumper from the LO position to the HI position. Check for the proper output voltage, LDO1 = 1.74V to 1.86V

10. Move the ENLDO2 jumper from the LO position to the HI position. Check for the proper output voltage, LDO2 = 3.2V to 3.4V

11. Once the proper output voltages are established, connect and adjust the loads within the operating range and observe the output voltage regulation, ripple voltage, efficiency and other parameters.

12. Repeat step 12 with the V1 jumper set to 1.5V and then 1.2V. LDO1 = 1.45V to 1.55V and 1.16V to 1.24V respectively.

13. Repeat step 12 with the V2 jumper set to 2.8V and then 1.8V. LDO2 = 2.71V to 2.89V and 1.74V to 1.86V respectively.

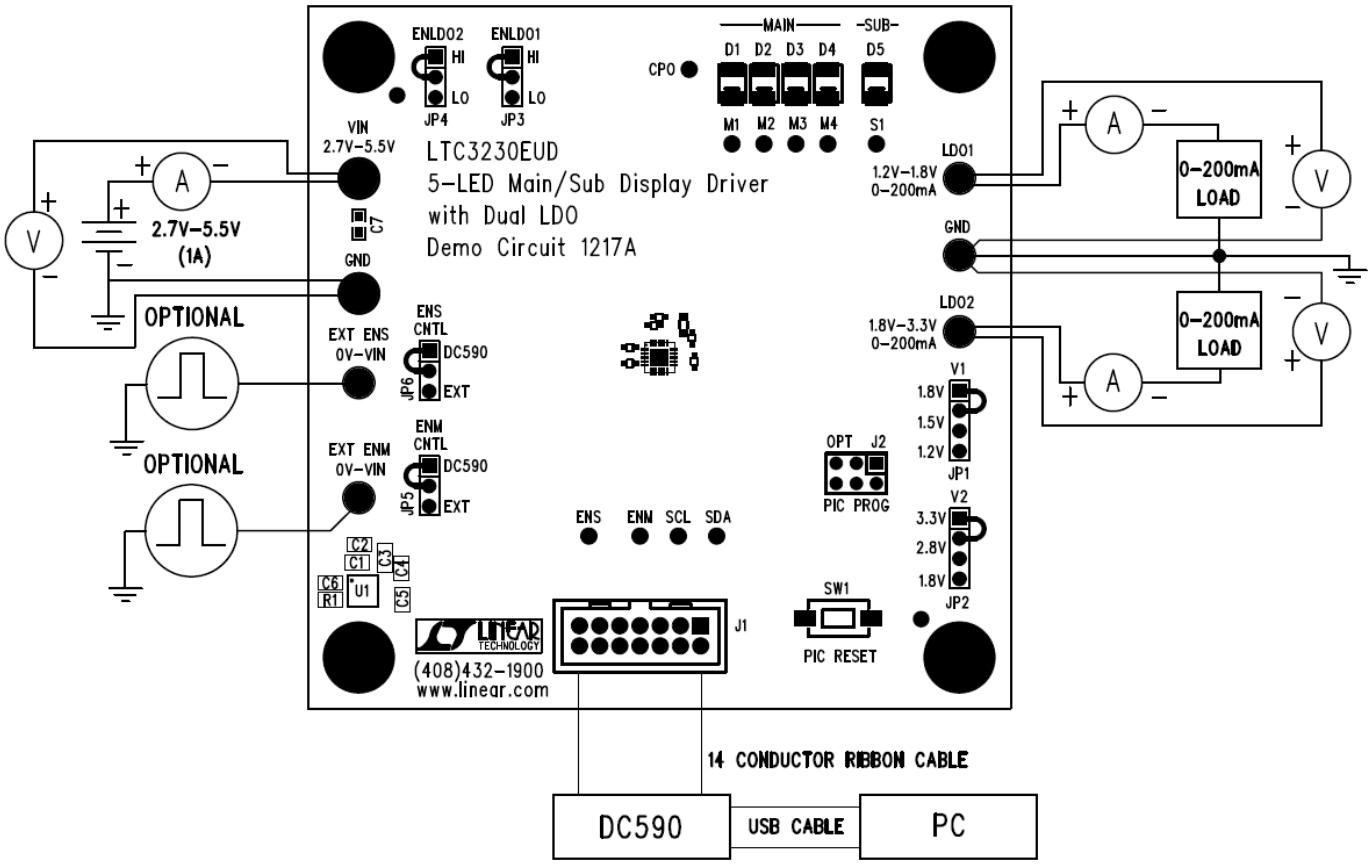

Figure 1. Proper Measurement Equipment Setup

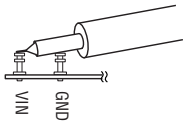

Figure 2. Measuring Input or Output Ripple

USING THE LTC3230 QUIKEVAL SOFTWARE

The program provides brightness controls for the Main and Sub LED displays. The **UPDATE** button updates the PIC controller with the appropriate pulse timing information and sets the LED displays to the current settings on the LTC3230 demo control window. This button must be selected after power is applied, the DC590 board was disconnected, or the PIC RESET button was depressed.

The **LEDS OFF** button sets all LEDs to zero and stops the gradation cycle.

VIEW LTC3230 PRODUCT PAGE Button – This button opens an internet browser and searches the Linear Technology Corporation web site for information on the LTC3230 when an internet connection is available.

ENM Control – This vertical slide control adjusts the Main LEDs from 0 to 25mA in 32 steps. This is ac-

complished by clicking on the up or down arrows to increment by one LSB, by clicking and dragging the slide pointer, or by clicking in the vertical scroll bar. The individual LED current and the number of pulses required to achieve this current are displayed in the two text boxes below the slider.

ENS Control – This vertical slide control adjusts the Sub LED from 0 to 25mA in 32 steps. This is accomplished by clicking on the up or down arrows to increment by one LSB, by clicking and dragging the slide pointer, or by clicking in the vertical scroll bar. The individual LED current and the number of pulses required to achieve this current are displayed in the two text boxes below the slider.

GRADATION STEP TIME Drop-Down Window – This window allows the user to select the length of time for each gradation step while running the GRADATION Cycle. See GRADATION Cycle button for more details on this function. The gradation step time may be adjusted from 10ms to 200ms in various increments.

GRADATION Cycle Button – This button may be selected to start or stop the GRADATION Cycle. The GRADATION Cycle cycles through the brightness levels of all the LEDs starting from the lowest to the highest intensity and then back to the lowest. To increase the LED intensity, the enable pins are held low for 250us prior to the first pulse of each step. After the highest intensity is reached, the intensity is then decreased by a single 5us pulse. This decrements the internal counter by one from the previous setting. This is done until the lowest setting is reached. This cycle is repeated until the GRADATION Cycle button is selected again or until the LEDS OFF button is selected.

UPDATE Button – When this button is selected, the PIC is updated with the pulse timing and the LED displays are updated to the present settings on the LTC3230 control window. This is necessary after power is applied to the demo board, the ribbon cable has been disconnected, or when the PIC RESET push button has been depressed.

LEDS OFF Button – This button turns off all of the LEDs and turns off GRADATION Cycle.

PIC RESET Push Button (SW1) – This button is located on the DC1217 demo board. It Resets the PIC when depressed. The reset button will not update or change the demo control window. The UPDATE button on the LTC3230 control window may be used to update the PIC to the current control window settings.

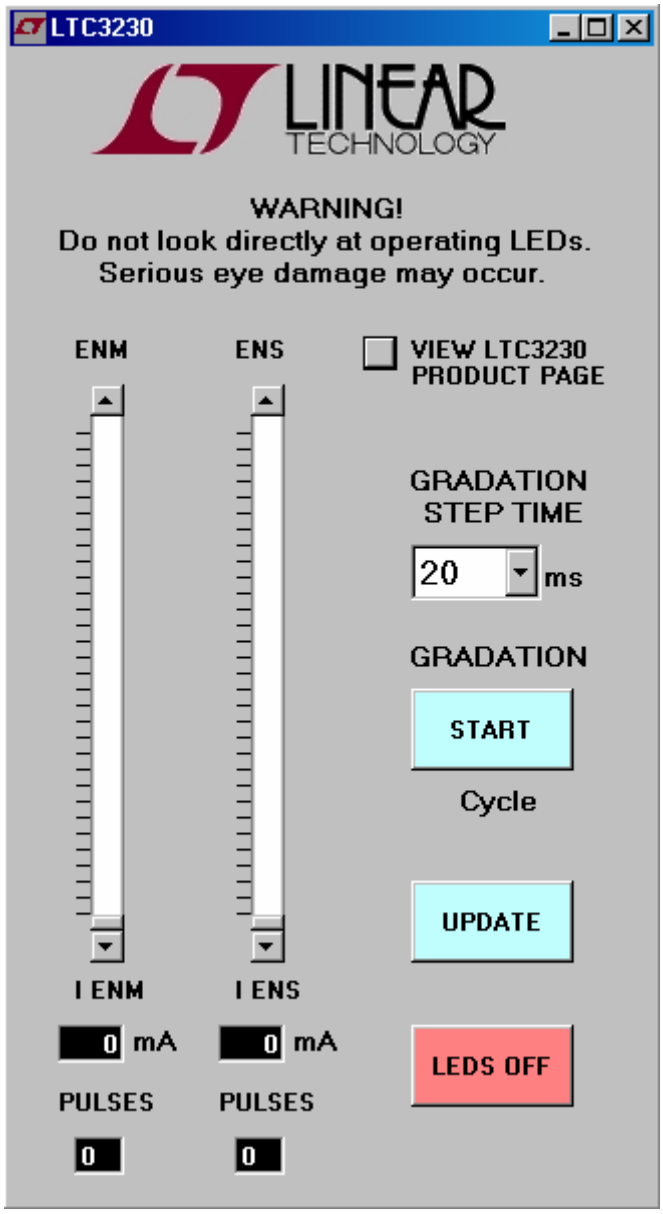

Figure 3. LTC3230 Control Window

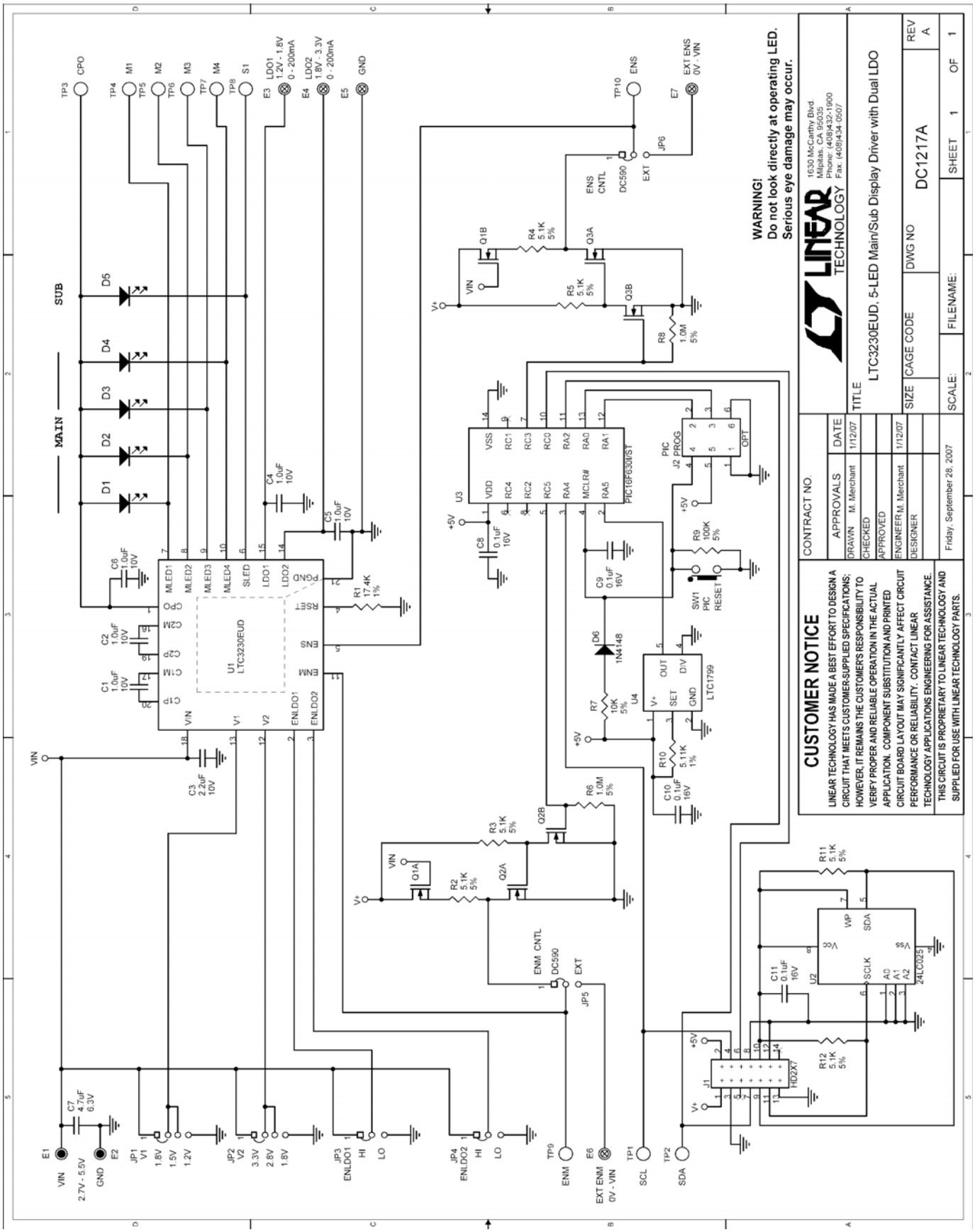
WARNING!
Do not look directly at operating LED.
Serious eye damage may occur.
CUSTOMER NOTICE
LINEAR TECHNOLOGY HAS MADE A BEST EFFORT TO DESIGN A CIRCUIT THAT MEETS CUSTOMER-SUPPLIED SPECIFICATIONS; HOWEVER, IT REMAINS THE CUSTOMER'S RESPONSIBILITY TO VERIFY PROPER AND RELIABLE OPERATION IN THE ACTUAL APPLICATION. COMPONENT SUBSTITUTION AND PRINTED CIRCUIT BOARD LAYOUT MAY SIGNIFICANTLY AFFECT CIRCUIT PERFORMANCE OR RELIABILITY. CONTACT LINEAR TECHNOLOGY APPLICATIONS ENGINEERING FOR ASSISTANCE.
THIS CIRCUIT IS PROPRIETARY TO LINEAR TECHNOLOGY AND SUPPLIED FOR USE WITH LINEAR TECHNOLOGY PARTS.
CONTRACT NO.
APPROVALS
DATE
DRAWN M. Merchant 1/12/07
CHECKED
APPROVED
ENGINEER M. Merchant 1/12/07
DESIGNER
Friday, September 28, 2007
LINEAR TECHNOLOGY
1630 McCarthy Blvd.
Milpitas, CA 95035
Phone: (408)432-1900
Fax: (408)434-0507
TITLE
LTC3230EUD, 5-LED Main/Sub Display Driver with Dual LDO
SIZE
CAGE CODE
DWG NO
DC1217A
REV
A
SCALE:
FILENAME:
SHEET 1 OF 1
MAIN
SUB
U1
LTC3230EUD
U3
PIC16F630I/ST
U4
LTC1799
U2
24LC025
J1
HD2X7
J2
PROG
SW1
PIC
RESET
DC590
ENM CNTL
EXT
ENS
CNTL
VIN
GND
SCL
SDA
ENM
EXT ENM
0V - VIN
EXT ENS
0V - VIN
LDO1
1.2V - 1.8V
0 - 200mA
LDO2
1.8V - 3.3V
0 - 200mA
2.7V - 5.5V

Linear Technology Corporation
LTC3230EUD

Parts List

Demo Circuit 1217A Rev 1
6/26/2007

Item	Qty	Ref - Des	Desc	Manufacturer's Part Number
		REQUIRED CIRCUIT COMPONENTS:		
1	5	C1,C2,C4-C6	CAP,1.0uF X5R 10V 10% 0402	MURATA, GRM155R61A105KE15D
2	1	C3	CAP, X5R 2.2uF 10V 10% 0603	MURATA, GRM188R61A225KE34D
3	5	D1-D5	LED, SMT, WHITE	NICHIA, NSSW100BT
4	1	R1	RES,17.4K CHIP 1% 1/8W 0402	VISHAY, CRCW040217K4FKED
5	1	U1	IC, MAIN/SUB LED Display Driver with Dual LDOs	LINEAR TECH., LTC3230EUD
		ADDITIONAL DEMO BOARD CIRCUIT COMPONENTS:		
1	4	C8-C11	CAP, 0.1uF, X7R, 10%, 16V, 0402	MURATA, GRM155R71C104KA88D
2	1	C7	CAP, 4.7uF, X5R, 10%, 6.3V, 0603	TDK, C1608X5R0J475K
3	7	R2-R5,R10-R12	RES, 5.11K, CHIP, 1%, 1/8W, 0402	VISHAY, CRCW04025K11FKED
4	2	R6,R8	RES, 1M, CHIP, 5%, 1/8W, 0402	VISHAY, CRCW04021M00JNED
5	1	R7	RES, 10K, CHIP, 5%, 1/8W, 0402	VISHAY, CRCW040210K0JNED
6	1	R9	RES, 100K, CHIP, 5%, 1/8W, 0402	VISHAY, CRCW0402100KJNED
7	1	D6	DIODE, 1N4148, SMT	DIODES IN, 1N4148WS
8	1	U2	IC, SERIAL EEPROM	MICROCHIP, 24LC025-I/ST
9	1	U3	IC, FLASH 8-BIT MCU	MICROCHIP, PIC16F630I/ST
10	1	U4	IC, OSCILLATOR	LINEAR TECHNOLOGY, LTC1799IS5
11	3	Q1-Q3	MOSFET, DUAL N-CHANNEL, SC-70	VISHAY, Si1912EDH
		Second Source	MOSFET, DUAL N-CHANNEL, SC-70	FAIRCHILD, FDG6303N
12	1	SW1	SWITCH, PUSH BUTTON	PANASONIC, EVQPPFA25
		HARDWARE FOR DEMO BOARD ONLY:		
1	1	J1	HEADER, 2X7, 2MM, STRAIGHT	MOLEX/WALDOM, 87831-1420
2	0	J2(OPT)	HEADER, 2X3-079	
3	2	E1,E2	TURRET, TESTPOINT	MILL MAX, 2501-2-00-80-00-00-07-0
4	5	E3-E7	TURRET, TESTPOINT	MILL MAX, 2308-2-00-80-00-00-07-0
5	2	JP1,JP2	HEADER, 4 POS, 2MM	SAMTEC, TMM-104-02-L-S
6	4	JP3-JP6	HEADER, 3 POS, 2MM	SAMTEC, TMM-103-02-L-S
7	6	JP1-JP6	SHUNT, 2MM	SAMTEC, 2SN-BK-G
8	4		STANDOFFS	KEYSTONE, 8831
9	1		CABLE ASSY., 8" STRIP	LINEAR RIBBON CABLE, CA-2440

Стандарт Электрон Связь

Мы молодая и активно развивающаяся компания в области поставок электронных компонентов. Мы поставляем электронные компоненты отечественного и импортного производства напрямую от производителей и с крупнейших складов мира.

Благодаря сотрудничеству с мировыми поставщиками мы осуществляем комплексные и плановые поставки широчайшего спектра электронных компонентов.

Собственная эффективная логистика и склад в обеспечивает надежную поставку продукции в точно указанные сроки по всей России.

Мы осуществляем техническую поддержку нашим клиентам и предпродажную проверку качества продукции. На все поставляемые продукты мы предоставляем гарантию .

Осуществляем поставки продукции под контролем ВП МО РФ на предприятия военно-промышленного комплекса России , а также работаем в рамках 275 ФЗ с открытием отдельных счетов в уполномоченном банке. Система менеджмента качества компании соответствует требованиям ГОСТ ISO 9001.

Минимальные сроки поставки, гибкие цены, неограниченный ассортимент и индивидуальный подход к клиентам являются основой для выстраивания долгосрочного и эффективного сотрудничества с предприятиями радиоэлектронной промышленности, предприятиями ВПК и научно-исследовательскими институтами России.

С нами вы становитесь еще успешнее!

Наши контакты:

Телефон: +7 812 627 14 35

Электронная почта: sales@st-electron.ru

Адрес: 198099, Санкт-Петербург,
Промышленная ул, дом № 19, литера Н,
помещение 100-Н Офис 331