Honeywell

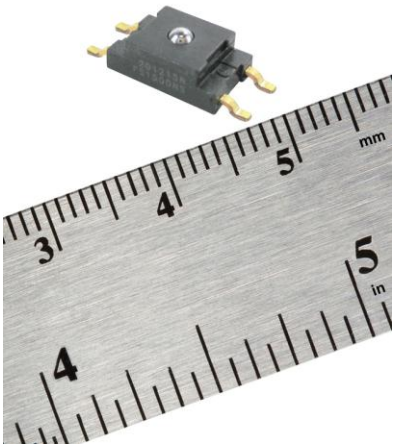

FSS-SMT Series

Low Profile Force Sensor

DESCRIPTION

Honeywell's FSS-SMT Series force sensors are designed to be one of the most reliable force sensors available as illustrated by 20 million Mean Cycles to Failure (MCTF) at 25 °C [77 °F] rating. This low profile Surface Mount Technology (SMT) sensor allows for automated assembly on a printed circuit board, often helping the customer to reduce assembly costs.

The FSS-SMT Series force sensor is designed to provide precise and reliable force sensing performance in a compact commercial-grade package. The sensor incorporates Honeywell sensing technology that uses a specialized piezoresistive micromachined silicon sensing element. The low power, unamplified, uncompensated Wheatstone bridge circuit design provides inherently stable mV output over the force range.

Force sensors operate on the principle that the resistance of silicon-implanted piezoresistors will change when the resistors flex under applied force. The sensor concentrates force from the applications, through the stainless steel ball, directly to the silicon-sensing element. The amount of resistance changes in proportion to the amount of force being applied. This change in circuit resistance results in a corresponding mV output level change.

The sensor package design incorporates patented modular construction. The use of innovative elastomeric technology and engineered molded plastics results in load excitation capacities up to 60 N (range dependent). The stainless steel ball provides excellent mechanical stability, and is suitable for a variety of potential medical and commercial applications.

FEATURES AND BENEFITS

- Surface Mount Technology allows for automated assembly and may eliminate hand soldering
- RoHS-compliant materials meet Directive 2002/95/EC
- Low deflection (approx. 30 µm typical at full scale) helps reduce measurement error
- Direct mechanical coupling of the actuation ball to the sense element reduces coupling errors and keeps mechanical hysteresis to a minimum
- Product rating of 20 million MCTF at 25 °C [77 °F], subject to application variation, provides for consistent output over time and reduces repairs or replacements
- Small size minimizes space on the printed circuit board (PCB)
- Provides enhanced sensitivity without compromising signal integrity, resulting in low system noise and reducing measurement errors
- Electrically ratiometric output accommodates supply voltage variations, leading to low ratiometricity error
- Low voltage supply allows for use in many battery powered applications
- High resistance to electrostatic discharge (ESD) meets ESD Sensitivity Classification Level 3B (8 KV), reducing special handling during assembly
- Sensor output has low sensitivity to many mounting stresses

POTENTIAL APPLICATIONS

Medical

- Infusion pumps
- Ambulatory non-invasive pumps
- Occlusion detection
- Kidney dialysis machines
- Enteral pumps

Industrial

- Load and compression sensing
- Variable tension control
- Robotic end-effectors
- Wire bonding equipment

FSS-SMT Series

Table 1. Performance Characteristics (At 10 ±0.01 Vdc, 25 °C [77 °F].)[1]

Characteristic	Unit	FSS005WNSX			FSS010WNSX			FSS015WNSX			FSS020WNSX		
		Min.	Typ.	Max.	Min.	Typ.	Max.	Min.	Typ.	Max.	Min.	Typ.	Max.
Force sensing range	N	0 to 5			0 to 10			0 to 15			0 to 20		
Excitation[2]	Vdc	3.3	10	12.5	3.3	10	12.5	3.3	10	12.5	3.3	10	12.5
Null offset[3]	mV	-30	0	+30	-30	0	+30	-30	0	+30	-30	0	+30
Null shift[4] (25 to 0°, 25 to 50° C)	mV	–	±0.5	–	–	±0.5	–	–	±0.5	–	–	±0.5	–
Span[5]	mV	330	360	390	330	360	390	330	360	390	330	360	390
Linearity (BFSL)[6]	% span	–	±0.5	–	–	±0.5	–	–	±0.5	–	–	±0.5	–
Sensitivity[7]	mV/V/N	6.6	7.2	7.8	3.3	3.6	3.9	2.2	2.4	2.6	1.65	1.8	1.95
Sensitivity shift[8] (25 °C to 0°, 25 °C to 50 °C)	% span	–	±5.0	–	–	±5.0	–	–	±5.0	–	–	±5.0	–
Repeatability[9]	% span	–	±0.2	–	–	±0.2	–	–	±0.2	–	–	±0.2	–
Response time (10 %FS to 90 %FS)	ms	–	0.1	0.5	–	0.1	0.5	–	0.1	0.5	–	0.1	0.5
Input resistance	kΩ	4.0	5.0	6.0	4.0	5.0	6.0	4.0	5.0	6.0	4.0	5.0	6.0
Output resistance	kΩ	4.0	5.0	6.0	4.0	5.0	6.0	4.0	5.0	6.0	4.0	5.0	6.0
Plunger deflection	µm	–	26	–	–	28	–	–	33	–	–	30	–
Overforce[10]	N	–	–	15	–	–	30	–	–	45	–	–	60

Notes:
1. All force-related specifications are established using dead weight or compliant force.
2. The range of voltage excitation which can be supplied to the product to produce an output which is proportional to force but due to ratiometricity errors may not remain within the specified performance limits. Non-compensated force sensors, excited by constant current (1.5 mA) instead of voltage, exhibit partial temperature compensation of span.
3. The output signal obtained when the zero force is applied to the sensor. Also known as "null" or "zero".
4. The change in the null resulting from a change in temperature. It is not a predictable error as it can shift up and down from unit to unit. Change in temperature causes the entire output curve to shift up or down along the voltage axis.
5. The algebraic difference between output signals measured at the upper and lower limits of the operating force range. Also known as "full scale output" or simply "span".
6. The maximum deviation of product output from a straight line fitted to output measured over the operating force range. It is also the straight line through a set of points which minimizes the sum of the square of the deviations of each of the points from the straight line.
7. The ratio of output signal change to the corresponding input force change. Sensitivity is determined by computing the ratio of span to the specified operating force range multiplied by the supply voltage being used.
8. The maximum deviation in sensitivity due to changes in temperature over the operating temperature range, relative to sensitivity measured at 25 °C.
9. The maximum difference between output readings when the same force is applied consecutively, under the same operating conditions, with force approaching from the same direction within the operating force range.
10. The maximum force which may safely be applied to the product for it to remain in specification once force is returned to the operating force range. Exposure to higher forces may cause permanent damage to the product. Unless otherwise specified, this applies to all temperatures within the operating temperature range.

CAUTION

EXCEEDING PRODUCT OVERFORCE RATING

- Ensure the overforce ratings given in Table 1 are not exceeded during any phase of sensor assembly to the board, as well as during the use of the sensor in the application.

Failure to comply with these instructions may result in product damage.

Table 2. Environmental Specifications

Characteristic	Parameter
Operating temperature[1]	-40 °C to 85 °C [-40 °F to 185 °F]
Shock	qualification tested to 150 g
Vibration	qualification tested to 0 to 2 kHz, 20 g sine
MCTF[2] (Mean Cycles To Failure)	20 million at 25 °C [77 °F]
Output ratiometric	within supply range

Notes:
1. The temperature range over which the product may safely be exposed without excitation or force applied. Under these conditions the product will remain in specification after excursion to any temperatures in this range. Exposure to temperatures beyond this range may cause permanent damage to the product.
2. MCTF is a basic measure of reliability for a non-repairable device. It is the mean number of cycles to maximum operating force over which a sensor can be expected to operate until failure. The mean value is determined statistically from a probability distribution for failures based upon test data. MCTF may vary depending on the specific application in which a sensor is utilized.

Table 3. Absolute Maximum Ratings[1]

Characteristic	Parameter
Storage temperature[2]	-40 °C to 100 °C [-40 °F to 212 °F]
Solderability[3]	10 s at 260 °C [500 °F]
ESD	Meets ESD Sensitivity Classification Level 3B

Notes:

1. The extreme limits that the product can withstand without damage to the product.
2. The temperature range over which the product may safely be exposed without excitation or force applied. Under these conditions, the product will remain in the specification after excursions to any temperature in this range. Exposure to temperatures beyond this range may cause permanent damage to the product.
3. The maximum temperature and time to which the product may be exposed for processing the solder electrical connections.

Figure 1. Excitation Schematic (Excitation 5 Vdc Typ., 6 Vdc max.)

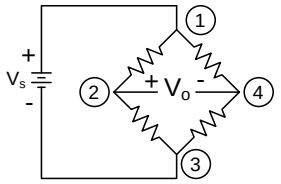

1. Circled numbers refer to sensor terminals (pins).
   Pin 1 = Supply Vs (+), Pin 2 = Output Vo (+), Pin 3 = Ground Vg (-), Pin 4 = Output Vo (-)
2. The force sensor may be powered by voltage or current. Maximum supply voltage is not to exceed 6 V. Maximum supply current is not to exceed 1.2 mA. Power is applied across Pin 1 and Pin 3.
3. The sensor output should be measured as a differential voltage across Pin 2 and Pin 4 (Vo = Vo(+)-Vo(-)). The output is ratiometric to the supply voltage. Shifts in supply voltage will cause shifts in output. Neither Pin 2 nor Pin 4 should be tied to ground or voltage supply.

Figure 2. Sensor Mounting Diagram (For reference only: mm/[in].)

FSS005WNSX, FSS010WNSX, FSS015WNSX, FSS020WNSX

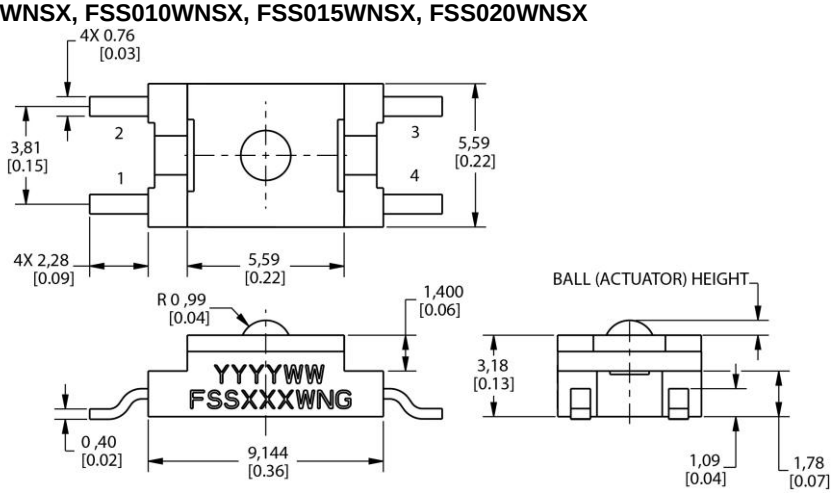

Force Sensing Range	Ball (Actuator) Height
0 N to 5 N	0.375 ±0.10 mm [0.0148 ±0.0039 in]
0 N to 10 N	0.452 ±0.10 mm [0. 0178 ±0.0039 in]
0 N to 15 N	0.504 ±0.10 mm [0.01984 ±0.0039 in]
0 N to 20 N	0.562 ±0.10 mm [0.0221 ±0.0039 in]

Suggested Land Pattern

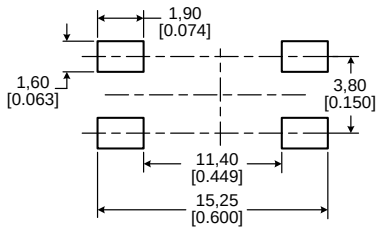

Figure 3. Packaging Dimensions (For reference only.)

Short Tube: 43,9 mm [1.73 in] long, 5 units/tube
Standard Tube: 584 mm [22.99 in] long, 100 units/tube

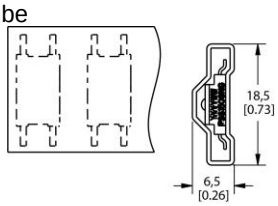

Tape and Reel (mm)

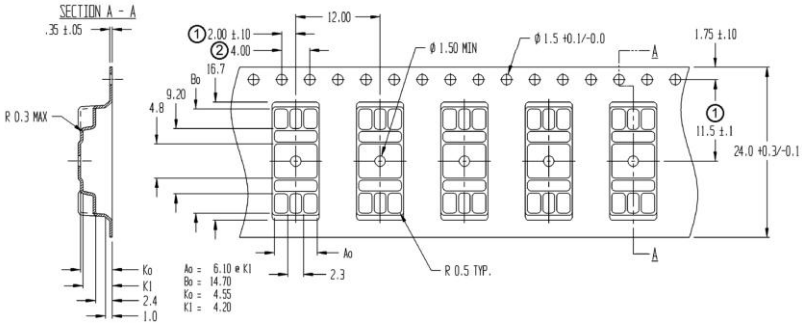

1. Pocket position relative to sprocket hole measured as true position of pocket, not pocket hole.
2. 10 sprocket hole pitch cumulative tolerance is ±0.2 mm.

- Camber is in compliance with EIA 481.
- Ao and Bo are calculated on a plane at a distance "R" above the bottom of the pocket.

Order Guide

Catalog Listing	Description
FSS005WNGB	FSS-SMT Series Low Profile Force Sensor, 0 N to 5 N force sensing range, short tube packaging
FSS005WNGR	FSS-SMT Series Low Profile Force Sensor, 0 N to 5 N force sensing range, tape and reel packaging
FSS005WNGT	FSS-SMT Series Low Profile Force Sensor, 0 N to 5 N force sensing range, standard tube packaging
FSS010WNGB	FSS-SMT Series Low Profile Force Sensor, 0 N to 10 N force sensing range, short tube packaging
FSS010WNGR	FSS-SMT Series Low Profile Force Sensor, 0 N to 10 N force sensing range, tape and reel packaging
FSS010WNGT	FSS-SMT Series Low Profile Force Sensor, 0 N to 10 N force sensing range, standard tube packaging
FSS015WNGB	FSS-SMT Series Low Profile Force Sensor, 0 N to 15 N force sensing range, short tube packaging
FSS015WNGR	FSS-SMT Series Low Profile Force Sensor, 0 N to 15 N force sensing range, tape and reel packaging
FSS015WNGT	FSS-SMT Series Low Profile Force Sensor, 0 N to 15 N force sensing range, standard tube packaging
FSS020WNGB	FSS-SMT Series Low Profile Force Sensor, 0 N to 20 N force sensing range, short tube packaging
FSS020WNGR	FSS-SMT Series Low Profile Force Sensor, 0 N to 20 N force sensing range, tape and reel packaging
FSS020WNGT	FSS-SMT Series Low Profile Force Sensor, 0 N to 20 N force sensing range, standard tube packaging

⚠ WARNING

MISUSE OF DOCUMENTATION

- The information presented in this product sheet is for reference only. Do not use this document as a product installation guide.
- Complete installation, operation, and maintenance information is provided in the instructions supplied with each product.

Failure to comply with these instructions could result in death or serious injury.

WARRANTY/REMEDY

Honeywell warrants goods of its manufacture as being free of defective materials and faulty workmanship. Honeywell's standard product warranty applies unless agreed to otherwise by Honeywell in writing; please refer to your order acknowledgement or consult your local sales office for specific warranty details. If warranted goods are returned to Honeywell during the period of coverage, Honeywell will repair or replace, at its option, without charge those items it finds defective. **The foregoing is buyer's sole remedy and is in lieu of all other warranties, expressed or implied, including those of merchantability and fitness for a particular purpose. In no event shall Honeywell be liable for consequential, special, or indirect damages.**

While we provide application assistance personally, through our literature and the Honeywell web site, it is up to the customer to determine the suitability of the product in the application.

Specifications may change without notice. The information we supply is believed to be accurate and reliable as of this printing. However, we assume no responsibility for its use.

⚠ WARNING

PERSONAL INJURY

DO NOT USE these products as safety or emergency stop devices or in any other application where failure of the product could result in personal injury.

Failure to comply with these instructions could result in death or serious injury.

SALES AND SERVICE

Honeywell serves its customers through a worldwide network of sales offices, representatives and distributors. For application assistance, current specifications, pricing or name of the nearest Authorized Distributor, contact your local sales office or:

E-mail: info.sc@honeywell.com

Internet: sensing.honeywell.com

Phone and Fax:

Asia Pacific	+65 6355-2828
	+65 6445-3033 Fax
Europe	+44 (0) 1698 481481
	+44 (0) 1698 481676 Fax
Latin America	+1-305-805-8188
	+1-305-883-8257 Fax
USA/Canada	+1-800-537-6945
	+1-815-235-6847
	+1-815-235-6545 Fax

Sensing and Control
Honeywell
1985 Douglas Drive North
Golden Valley, MN 55422
sensing.honeywell.com

Honeywell

080281-2-EN
February 2013
© 2013 Honeywell International Inc. All rights reserved.

Мы молодая и активно развивающаяся компания в области поставок электронных компонентов. Мы поставляем электронные компоненты отечественного и импортного производства напрямую от производителей и с крупнейших складов мира.

Благодаря сотрудничеству с мировыми поставщиками мы осуществляем комплексные и плановые поставки широчайшего спектра электронных компонентов.

Собственная эффективная логистика и склад в обеспечивает надежную поставку продукции в точно указанные сроки по всей России.

Мы осуществляем техническую поддержку нашим клиентам и предпродажную проверку качества продукции. На все поставляемые продукты мы предоставляем гарантию .

Осуществляем поставки продукции под контролем ВП МО РФ на предприятия военно-промышленного комплекса России , а также работаем в рамках 275 ФЗ с открытием отдельных счетов в уполномоченном банке. Система менеджмента качества компании соответствует требованиям ГОСТ ISO 9001.

Минимальные сроки поставки, гибкие цены, неограниченный ассортимент и индивидуальный подход к клиентам являются основой для выстраивания долгосрочного и эффективного сотрудничества с предприятиями радиоэлектронной промышленности, предприятиями ВПК и научно-исследовательскими институтами России.

С нами вы становитесь еще успешнее!

Наши контакты:

Телефон: +7 812 627 14 35

Электронная почта: sales@st-electron.ru

Адрес: 198099, Санкт-Петербург, Промышленная ул, дом № 19, литера Н, помещение 100-Н Офис 331