RS Series Relay Modules

At only 6.2mm thickness the RS series Relay module features a slim Din Rail mountable interface solution. The modules have a plug in construction and are available with or without the relay. The built in LED indicates the relay energizing state. The relay features a SPDT configuration and a maximum switching current of 6A. It is available with several standard coil voltages from 5VAC/DC up to 230V AC/DC.

There is a provision for fitting pluggable jumpers which reduces the wiring time. The modules have screw terminals with finger protection for wire termination and offer an IP 20 protection rating. The relay has an IP67 protection rating. Both the relay and the module are UL recognized.

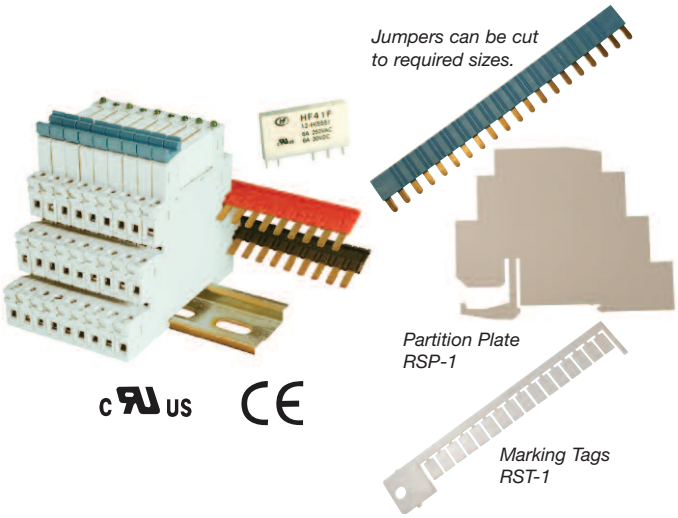

shown on DIN rail with relays and jumpers

Part Number	Type number	Description	Std. Pk.
RSM-12CU	41F-1Z-C2-1-555 + HF41F/12-Z-S	6A@250VAC/30VDC,12VAC/DC Coil, 6.2 mm, LED, SPDT	10
RSM-24CU	41F-1Z-C2-1-555 + HF41F/24-Z-S	6A@250VAC/30VDC,24VAC/DC Coil, 6.2 mm, LED, SPDT	10
RSM-110CU	41F-1Z-C2-3-555 + HF41F/60-Z-S	6A@250VAC/30VDC,110VAC/DC Coil, 6.2mm, LED, SPDT	10
RSM-220CU	41F-1Z-C2-4-555 + HF41F/60-Z-S	6A@250VAC/30VDC,220VAC/DC Coil, 6.2mm, LED, SPDT	10
RSJ-RD	HF41F-AAJ-001-RD	Jumper for RSM, Red, 36A, 250V, 20 pole	10
RSJ-BK	HF41F-AAJ-001-BK	Jumper for RSM, Black, 36A, 250V, 20 pole	10
RSJ-BL	HF41F-AAJ-001-BL	Jumper for RSM, Blue, 36A, 250V, 20 pole	10
RSP-1	HF41F-AAS-001	Partition plate for RMS 2.2mm wide	10
RST-1	HF41F-AAT-001	Marking Tag strip for RSM, white, (16 tags per strip)	4

RS Series Socket

CHARACTERISTICS

Ambient Temperature:	-40°C to +70°C (-40°F to +158°F)
Rated Voltage:	250VAC
Rated Current:	6A (per pole)
Insulation Voltage (Min.):	5000VAC
Protection:	IP20
Socket Material:	PA66+GF V0 (UL)
Contacts Spring Material:	QSn6.5-0.1
Terminal Torque:	0.6Nm (5.3 lb. in.)
Wire Strip Length:	7mm
Applicable Relay Type:	RSR Series (41F)

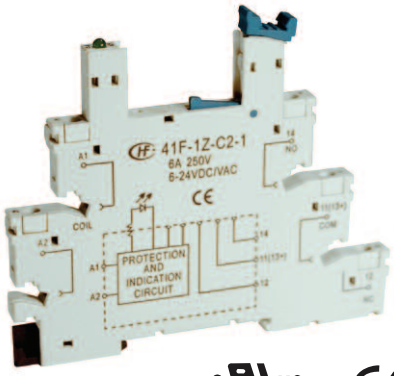

File No.: E253370

Part Number	Type number	Description
RSS-624U	41F-1Z-C2-1-555	For 6 to 24VAC/DC relays, IP20, LED
RSS-624D	41F-1Z-C2-5-555	For 6 to 24VDC relays, IP20, LED
RSS-4860U	41F-1Z-C2-2-555	For 48 to 60VAC/DC relays, IP20, LED
RSS-110U	41F-1Z-C2-3-555	For 110 VAC/DC relays, IP20, LED
RSS-220U	41F-1Z-C2-4-555	For 220 VAC/DC relays, IP20, LED

Notes: Module features/ functions:

(1) LED indicates the coil energizing state.
(2) Eliminates negative current of relays.
(3) Rectifying function (only for VAC/DC types).

Dimensions (mm)
(to convert to inches multiply by 0.03937)

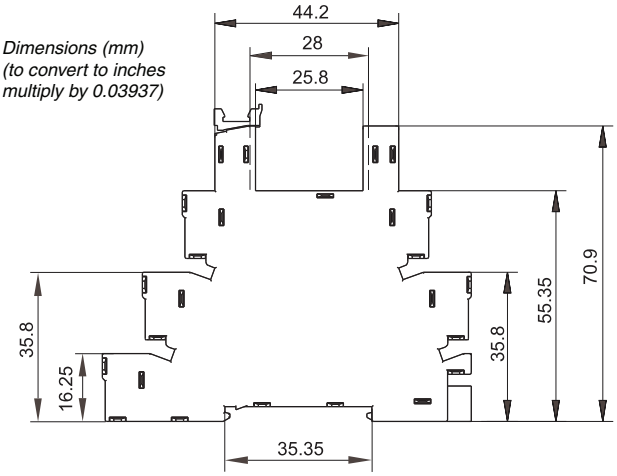

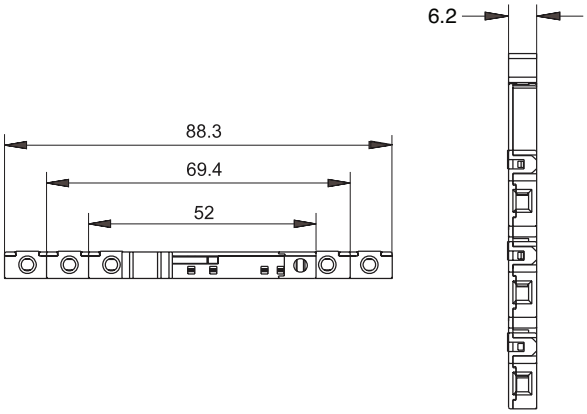

RS Series Subminiature Power Relay

FEATURES

- Slim size (width 5mm)
- High breakdown voltage 4kV (between coil and contacts)
- Surge voltage up to 6kV (between coil and contacts)
- Clearance/creepage distance: 8mm
- Coil power consumption: 170mW
- Contact configuration: SPDT (Form C)
- Environmental friendly product (RoHS compliant)
- Outlne Dimensions: 28.0 x 5.0 x 15.0mm

File No.:E133481

File No.:40020043

CONTACT INFORMATION

Contact arrangement		SPDT
Initial contact Resistance Max.		100mΩ (at 1A/6VDC) Gold plated: 30mΩ (at 1A/6VDC)
Contact material		AgNi
Contact rating	Resistive Load	6A/250VAC
		6A/30VDC
	Pilot Duty	R300
Max. switching voltage		400VAC / 125VDC
Max. switching current		6A
Max. switching power		1500VA / 180W
Mechanical life		10 million cycles
Electrical life		10,000 cycles at 85°C (185°F)

Part Number	Type number	Description
RSR-05DCS	HF41F/5-Z-S-555	SPDT, 5 mm, 5VDC Coil, IP67
RSR-06DCS	HF41F/6-Z-S-555	SPDT, 5 mm, 6VDC Coil, IP67
RSR-12DCS	HF41F/12-Z-S-555	SPDT, 5 mm, 12VDC Coil, IP67
RSR-24DCS	HF41F/24-Z-S-555	SPDT, 5 mm, 24VDC Coil, IP67
RSR-48DCS	HF41F/48-Z-S-555	SPDT, 5 mm, 48VDC Coil, IP67
RSR-60DCS	HF41F/60-Z-S-555	SPDT, 5 mm, 60VDC Coil, IP67

Contact Configuration
1 Form SPDT

Dimensions (mm)
(to convert to inches multiply by 0.03937)

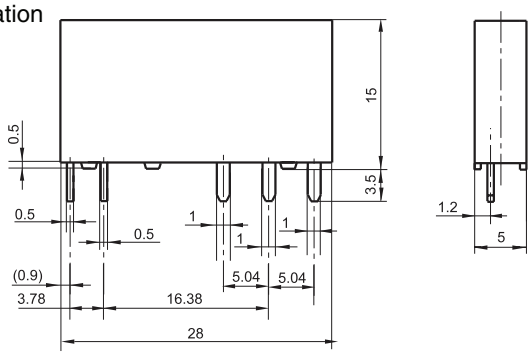

CHARACTERISTICS

Initial insulation resistance		1000mΩ (at 500VDC)
Dielectric strength	Between coil & contacts	4000VAC 1 min.
	Between open contacts	1000VAC 1 min.
Operate time (at nominal voltage)		Max. 8ms
Release time (at nominal voltage)		Max. 4ms
Shock resistance	Functional	50m/s² (5g)
	Destructive	1000m/s² (100g)
Vibration resistance		1mm double amplitude max @10 ...55 Hz, 6G max
Humidity		5 to 85% RH
Ambient temperature		-40°C to +85°C (-40°F to +185°F)
Termination		Plug in; PCB mount
Unit weight		5.4g (0.2 oz.)
Construction		Sealed IP67. Flux proof

Wiring Diagram

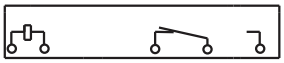

PCB Layout

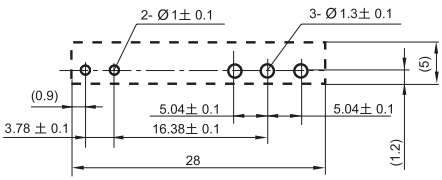

MAXIMUM SWITCHING POWER

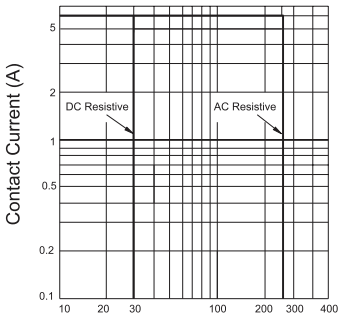

COIL

Coil power consumption:	5 to 24VDC: 170mW 48VDC, 60VDC: 210mW

COIL DATA

at 20°C

Nominal Voltage (VDC)	Pick-up Voltage (VDC)	Drop-out Voltage (VDC)	Max. Allowable Voltage (VDC) 85°C	Coil Resistance (Ω)
5	3.75	0.25	6.50	147 ± 10%
6	4.50	0.30	7.80	212 ± 10%
12	9.00	0.60	15.6	848 ± 10%
24	18.0	1.20	31.2	3390 ± 15%
48	36.0	2.40	62.4	10600 ± 15%
60	45.0	3.00	78.0	16600 ± 15%

ENDURANCE CURVE

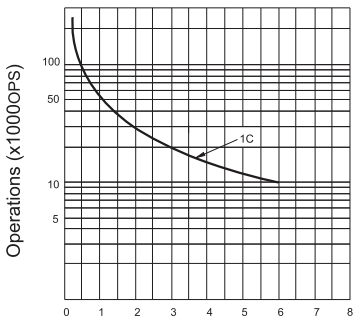

COIL TEMPERATURE RISE

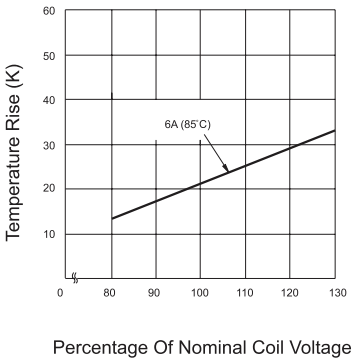

Мы молодая и активно развивающаяся компания в области поставок электронных компонентов. Мы поставляем электронные компоненты отечественного и импортного производства напрямую от производителей и с крупнейших складов мира.

Благодаря сотрудничеству с мировыми поставщиками мы осуществляем комплексные и плановые поставки широчайшего спектра электронных компонентов.

Собственная эффективная логистика и склад в обеспечивает надежную поставку продукции в точно указанные сроки по всей России.

Мы осуществляем техническую поддержку нашим клиентам и предпродажную проверку качества продукции. На все поставляемые продукты мы предоставляем гарантию .

Осуществляем поставки продукции под контролем ВП МО РФ на предприятия военно-промышленного комплекса России , а также работаем в рамках 275 ФЗ с открытием отдельных счетов в уполномоченном банке. Система менеджмента качества компании соответствует требованиям ГОСТ ISO 9001.

Минимальные сроки поставки, гибкие цены, неограниченный ассортимент и индивидуальный подход к клиентам являются основой для выстраивания долгосрочного и эффективного сотрудничества с предприятиями радиоэлектронной промышленности, предприятиями ВПК и научно-исследовательскими институтами России.

С нами вы становитесь еще успешнее!

Наши контакты:

Телефон: +7 812 627 14 35

Электронная почта: sales@st-electron.ru

Адрес: 198099, Санкт-Петербург, Промышленная ул, дом № 19, литера Н, помещение 100-Н Офис 331