MAX14783E

High-Speed 3.3V/5V RS-485/RS-422 Transceiver with ±35kV HBM ESD Protection

General Description

The MAX14783E is a half-duplex RS-485/422 transceiver that operates at either 3.3V or 5V rails with high ±35kV ESD performance and up to 42Mbps data rate. The device is optimized for high speeds over extended cable runs while maximizing tolerance to noise.

The MAX14783E is available in 8-pin µMAX®, 8-pin SO, and 8-pin TDFN-EP packages. The device in the TDFN-EP package operates over the -40°C to +125°C temperature range. The MAX14783E in the µMAX and SO packages operates over the -40°C to +85°C and -40°C to +125°C temperature ranges.

Applications

- Motion Controllers
- Field Bus Networks
- Encoder Interfaces
- Backplane Busses

Benefits and Features

- Integrated Protection Increases Robustness
  - High ESD Protection
    ±35kV HBM ESD per JEDEC JS-001-2012
    ±20kV Air Gap per IEC 61000-4-2
    ±12kV Contact ESD per IEC 61000-4-2
  - Short-Circuit Protected Outputs
  - True Fail-Safe Receiver Prevents False Transition on Receiver Input Short or Open Events
  - Hot-Swap Capability Eliminates False Transitions During Power-Up or Hot Insertion
- 3V to 5.5V Supply Voltage Range
- High-Speed Data Rates up to 42Mbps
- -40°C to +125°C Operating Temperature
- Allows Up to 32 Transceivers on the Bus
- Low 10µA (max) Shutdown Current for Lower Power Consumption

***Ordering Information* appears at end of data sheet.**

Functional Diagram

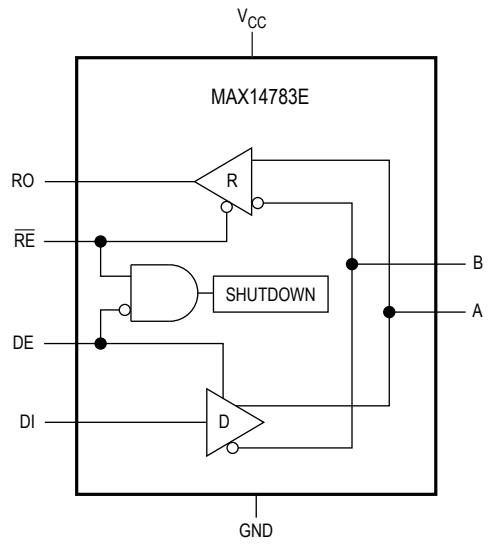

µMAX is a registered trademark of Maxim Integrated Products, Inc,.

Absolute Maximum Ratings

(Voltages referenced to GND.)

V_{CC} .....-0.3V to +6.0V
RO .....-0.3V to (V_{CC} + 0.3V)
$\overline{RE}$, DE, DI .....-0.3V to +6.0V
A, B (V_{CC} ≥ 3.6V) .....-8.0V to +13.0V
A, B (V_{CC} < 3.6V) .....-9.0V to +13.0V
Short-Circuit Duration (RO, A, B) to GND .....Continuous
Operating Temperature Range
MAX14783EE_ ..... -40°C to +85°C
MAX14783EA_ ..... -40°C to +125°C
Junction Temperature .....+150°C
Storage Temperature Range ..... -65°C to +150°C
Continuous Power Dissipation (T_A = +70°C)
µMAX (derate at 4.8mW/°C above +70°C) 387mW
SO (derate at 7.6mW/°C above +70°C) 606mW
TDFN-EP (derate at 24.4mW/°C above +70°C).....1951mW
Lead Temperature (soldering, 10s) ..... +300ºC
Soldering Temperature (reflow) ..... +260°C

Stresses beyond those listed under "Absolute Maximum Ratings" may cause permanent damage to the device. These are stress ratings only, and functional operation of the device at these or any other conditions beyond those indicated in the operational sections of the specifications is not implied. Exposure to absolute maximum rating conditions for extended periods may affect device reliability.

Package Thermal Characteristics (Note 1)

Junction-to-Case Thermal Resistance (θ_{JC})
8-pin µMAX.....42°C/W
8-pin SO .....38°C/W
8-pin TDFN-EP .....8°C/W

Junction-to-Ambient Thermal Resistance (θ_{JA})
8-pin µMAX.....206°C/W
8-pin SO .....132°C/W
8-pin TDFN-EP .....41°C/W

Note 1: Package thermal resistances were obtained using the method described in JEDEC specification JESD51-7, using a four-layer board. For detailed information on package thermal considerations, refer to **www.maximintegrated.com/thermal-tutorial**.

Electrical Characteristics

(V_{CC} = +3.0V to +5.5V, T_A = T_{MIN} to T_{MAX}, unless otherwise specified. Typical values are at V_{CC} = +5V and T_A = +25°C.) (Notes 2, 3)

PARAMETER	SYMBOL	CONDITIONS	MIN	TYP	MAX	UNITS
POWER SUPPLY						
Supply Voltage	V_{CC}		3.0		5.5	V
Supply Current	I_{CC}	DE = V_{CC}, $\overline{RE}$ = GND, no load		1.9	4	mA
Shutdown Supply Current	I_{SHDN}	DE = GND, $\overline{RE}$ = V_{CC}			10	µA
DRIVER						
Differential Driver Output	V_{OD}	V_{CC} = 4.5V, R_L = 54Ω, Figure 1	2.1			V
		V_{CC} = 3V, R_L = 100Ω, Figure 1	2.0			
		V_{CC} = 3V, R_L = 54Ω, Figure 1	1.5			
Change in Magnitude of Differential Output Voltage	ΔV_{OD}	R_L = 54Ω or 100Ω, Figure 1 (Note 4)	-0.2	0	+0.2	V
Driver Common-Mode Output Voltage	V_{OC}	R_L = 54Ω or 100Ω, Figure 1		V_{CC} / 2	3	V
Change in Magnitude of Common-Mode Voltage	ΔV_{OC}	R_L = 54Ω or 100Ω, Figure 1 (Note 4)	-0.2		+0.2	V
Single-Ended Driver Output High	V_{OH}	A or B output, $I_{A\ or\ B}$ = -20mA	2.2			V
Single-Ended Driver Output Low	V_{OL}	A or B output, $I_{A\ or\ B}$ = 20mA			0.8	V
Differential Output Capacitance	C_{OD}	DE = $\overline{RE}$ = V_{CC}, f = 4MHz		12		pF
Driver Short-Circuit Output Current	$\lvert I_{OST} \rvert$	0 ≤ V_{OUT} ≤ +12V, output low			250	mA
		-7V ≤ V_{OUT} ≤ V_{CC}, output high			250	mA

Electrical Characteristics (continued)

(V_{CC} = +3.0V to +5.5V, T_A = T_{MIN} to T_{MAX}, unless otherwise specified. Typical values are at V_{CC} = +5V and T_A = +25°C.) (Notes 2, 3)

PARAMETER	SYMBOL	CONDITIONS		MIN	TYP	MAX	UNITS
RECEIVER							
Input Current	$I_{A, B}$	DE = GND, V_{CC} = GND or +5.5V	V_{IN} = +12V		400	1000	µA
			V_{IN} = -7V	-800	300		
Differential Input Capacitance	$C_{A, B}$	Between A and B, DE = GND, f = 4MHz			12		pF
Receiver Differential Threshold Voltage	V_{TH}	-7V ≤ V_{CM} ≤ +12V		-200	-105	-10	mV
Receiver Input Hysteresis	ΔV_{TH}	V_{CM} = 0V			10		mV
Receiver Input Resistance	R_{IN}	-7V ≤ V_{CM} ≤ +12V		12			kΩ
LOGIC INTERFACE (DI, DE, $\overline{RE}$, RO)							
Input Voltage High	V_{IH}	DE, DI, $\overline{RE}$		2.0			V
Input Voltage Low	V_{IL}	DE, DI, $\overline{RE}$				0.8	V
Input Hysteresis	V_{HYS}	DE, DI, $\overline{RE}$			50		mV
Input Current	I_{IN}	DE, DI, $\overline{RE}$				±1	µA
Input Impedance on First Transition		DE, $\overline{RE}$		1		10	kΩ
RO Output Voltage High	V_{OHRO}	$\overline{RE}$ = GND, I_{RO} = -2mA, (V_A - V_B) > 200mV		V_{CC} - 1.5			V
RO Output Voltage Low	V_{OLRO}	$\overline{RE}$ = GND, I_{RO} = 2mA, (V_A - V_B) < -200mV				0.4	V
Receiver Tri-State Output Current	I_{OZR}	$\overline{RE}$ = V_{CC}, 0 ≤ V_{RO} ≤ V_{CC}				±1	µA
Receiver Output Short-Circuit Current	I_{OSR}	0 ≤ V_{RO} ≤ V_{CC}				±110	mA
PROTECTION							
Thermal Shutdown Threshold	T_{SHDN}	Temperature rising			+160		°C
Thermal Shutdown Hysteresis					15		°C
ESD Protection on A and B Pins		IEC 61000-4-2 Air Gap Discharge to GND			±20		kV
		IEC 61000-4-2 Contact Discharge to GND			±12		
		Human Body Model			±35		
ESD Protection, All Other Pins		Human Body Model			±2		kV

Switching Characteristics MAX14783E

(V_{CC} = +3V to +5.5V, T_A = T_{MIN} to T_{MAX}, unless otherwise specified. Typical values are at V_{CC} = +5V and T_A = +25°C.) (Notes 2, 3, 5)

PARAMETER	SYMBOL	CONDITIONS		MIN	TYP	MAX	UNITS
DRIVER							
Driver Propagation Delay	t_{DPLH}	R_L = 54Ω, C_L = 50pF, Figures 2 and 3				20	ns
	t_{DPHL}					20	
Driver Differential Output Rise or Fall Time	t_{HL}, t_{LH}	R_L = 54Ω, C_L = 50pF, Figures 2 and 3				7	ns
Differential Driver Output Skew $\lvert t_{DPLH} - t_{DPHL} \rvert$	t_{DSKEW}	R_L = 54Ω, C_L = 50pF, Figures 2 and 3 (Note 6)				3	ns
Maximum Data Rate	DR_{MAX}	MAX14783EATA				42	Mbps
		MAX14783EEUA				30	
		MAX14783EESA				40	
		MAX14783EAUA	3.0V ≤ V_{CC} ≤ 3.6V			42	
			3.0V ≤ V_{CC} ≤ 5.5V			6	
		MAX14783EASA	3.0V ≤ V_{CC} ≤ 3.6V			42	
			3.0V ≤ V_{CC} ≤ 5.5V			16	
Driver Enable to Output High	t_{DZH}	R_L = 110Ω, C_L = 50pF, Figures 4 and 5 (Note 7)				30	ns
Driver Enable to Output Low	t_{DZL}	R_L = 110Ω, C_L = 50pF, Figures 4 and 5 (Note 7)				30	ns
Driver Disable Time from Low	t_{DLZ}	R_L = 110Ω, C_L = 50pF, Figures 4 and 5				30	ns
Driver Disable Time from High	t_{DHZ}	R_L = 110Ω, C_L = 50pF, Figures 4 and 5				30	ns
Driver Enable from Shutdown to Output High	$t_{DLZ(SHDN)}$	R_L = 110Ω, C_L = 15pF, Figures 4 and 5 (Note 7)				6	µs

Switching Characteristics MAX14783E (continued)

(V_{CC} = +3V to +5.5V, T_A = T_{MIN} to T_{MAX}, unless otherwise specified. Typical values are at V_{CC} = +5V and T_A = +25°C.) (Notes 2, 3, 5)

PARAMETER	SYMBOL	CONDITIONS	MIN	TYP	MAX	UNITS
Driver Enable from Shutdown to Output Low	$t_{DHZ(SHDN)}$	R_L = 110Ω, C_L = 15pF, Figures 4 and 5 (Note 7)			6	µs
Time to Shutdown	t_{SHDN}	(Note 7)	50		800	ns
RECEIVER						
Receiver Propagation Delay	t_{RPLH}	C_L = 15pF, Figures 6 and 7			25	ns
	t_{RPHL}				25	
Receiver Output Skew	t_{RSKEW}	C_L = 15pF, Figures 6 and 7 (Note 6)			2	ns
Maximum Data Rate	DR_{MAX}		42			Mbps
Receiver Enable to Output High	t_{RZH}	R_L = 1kΩ, C_L = 15pF, Figure 8 (Note 7)			30	ns
Receiver Enable to Output Low	t_{RZL}	R_L = 1kΩ, C_L = 15pF, Figure 8 (Note 7)			30	ns
Receiver Disable Time from Low	t_{RLZ}	R_L = 1kΩ, C_L = 15pF, Figure 8			30	ns
Receiver Disable Time from High	t_{RHZ}	R_L = 1kΩ, C_L = 15pF, Figure 8			30	ns
Receiver Enable from Shutdown to Output High	$t_{RLZ(SHDN)}$	R_L = 1kΩ, C_L = 15pF, Figure 8 (Note 7)			6	µs
Receiver Enable from Shutdown to Output Low	$t_{RHZ(SHDN)}$	R_L = 1kΩ, C_L = 15pF, Figure 8 (Note 7)			6	µs
Time to Shutdown	t_{SHDN}	(Note 7)	50		800	ns

Note 2: All devices 100% production tested at T_A = +25°C. Specifications over temperature are guaranteed by design.
Note 3: All currents into the device are positive; all currents out of the device are negative. All voltages are referenced to ground, unless otherwise noted.
Note 4: ΔV_{OD} and ΔV_{OC} are the changes in V_{OD} and V_{OC}, respectively, when the DI input changes state.
Note 5: Capacitive load includes test probe and fixture capacitance.
Note 6: Guaranteed by design; not production tested.
Note 7: The timing parameter refers to the driver or receiver enable delay, when the device has exited the initial hot-swap protect state and is in normal operating mode.
Note 8: Shutdown is enabled by driving $\overline{RE}$ high and DE low. The device is guaranteed to have entered shutdown after t_{SHDN} has elapsed.

Test and Timing Diagrams

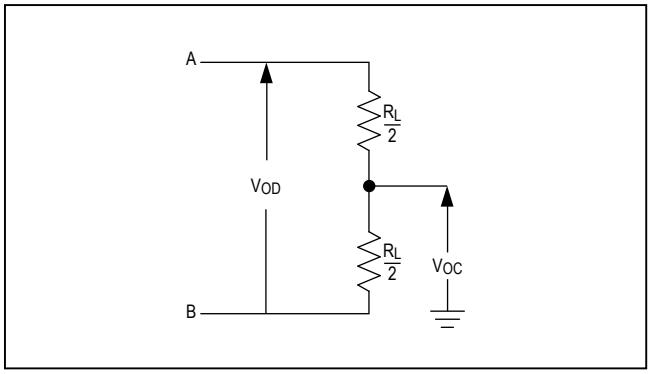

Figure 1. Driver DC Test Load

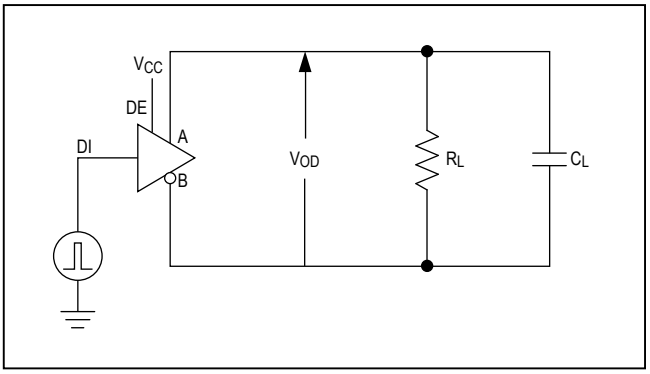

Figure 2. Driver Timing Test Circuit

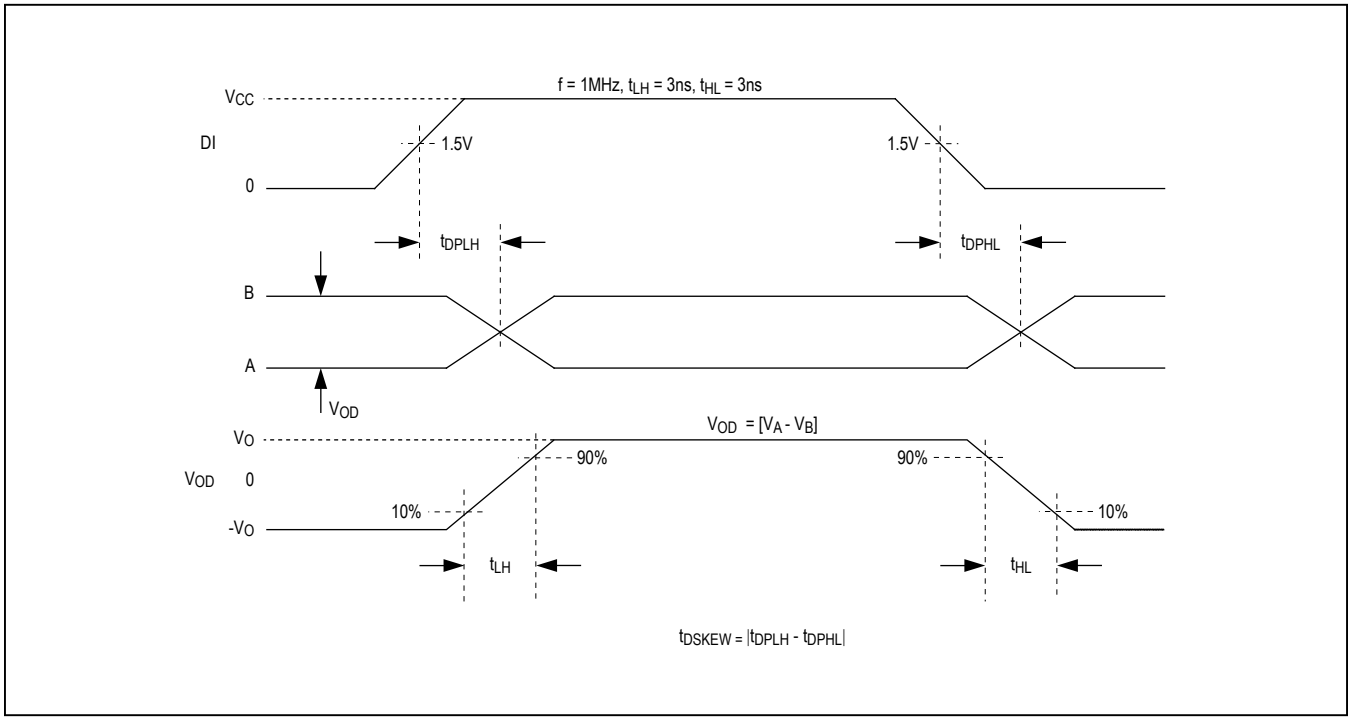

Figure 3. Driver Propagation Delays

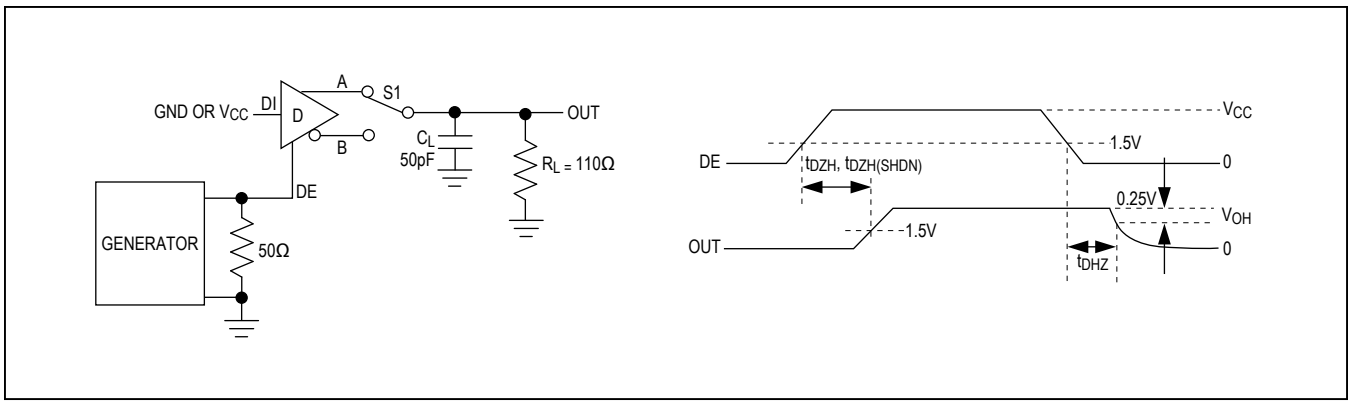

Figure 4. Driver Enable and Disable Times (t_{DZH}, t_{DHZ})

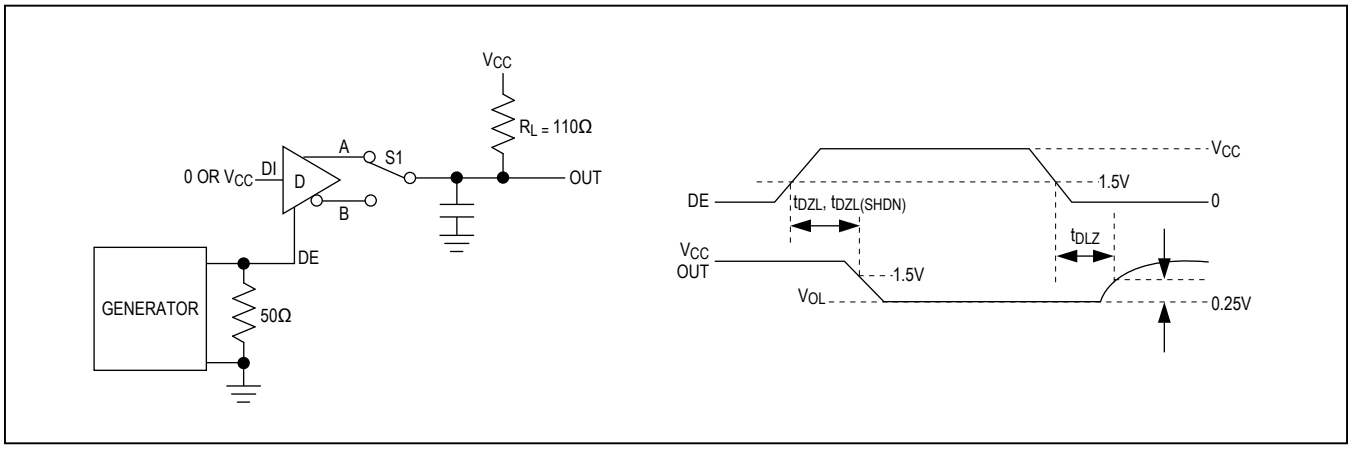

Figure 5. Driver Enable and Disable Times (t_{DZL}, t_{DLZ})

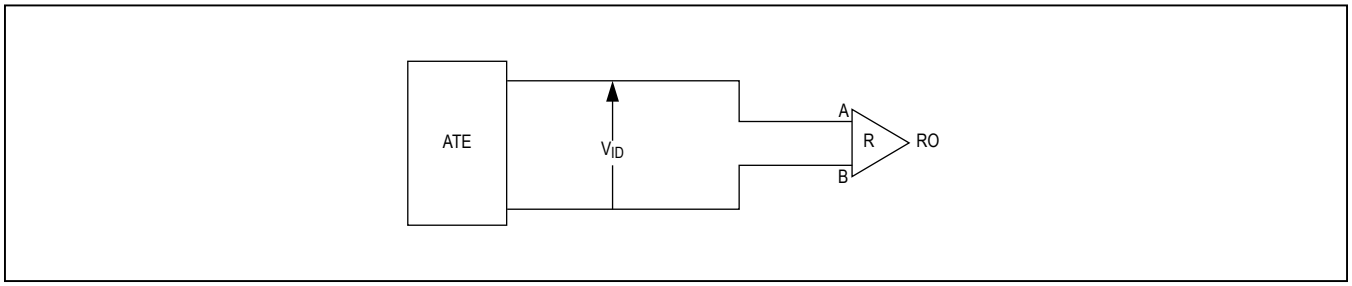

Figure 6. Receiver Propagation Delay Test Circuit

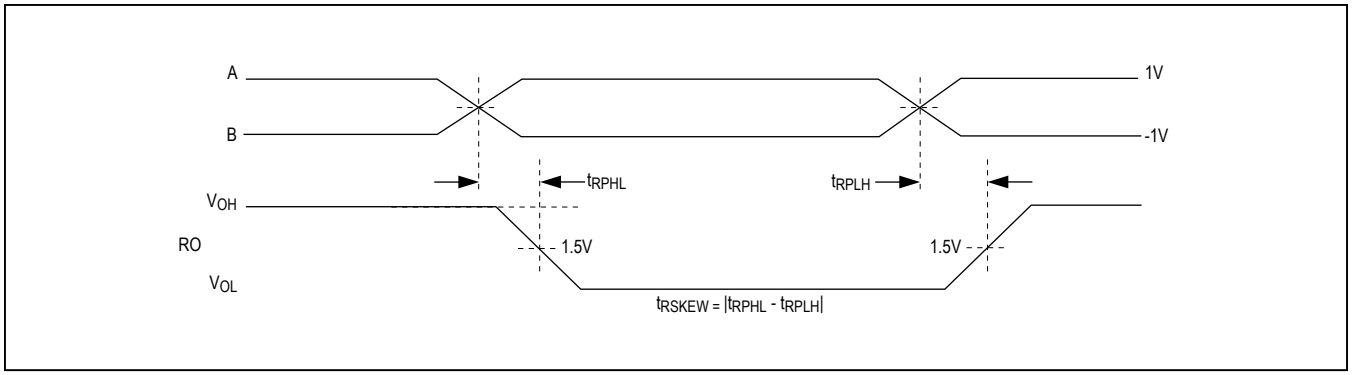

Figure 7. Receiver Propagation Delays

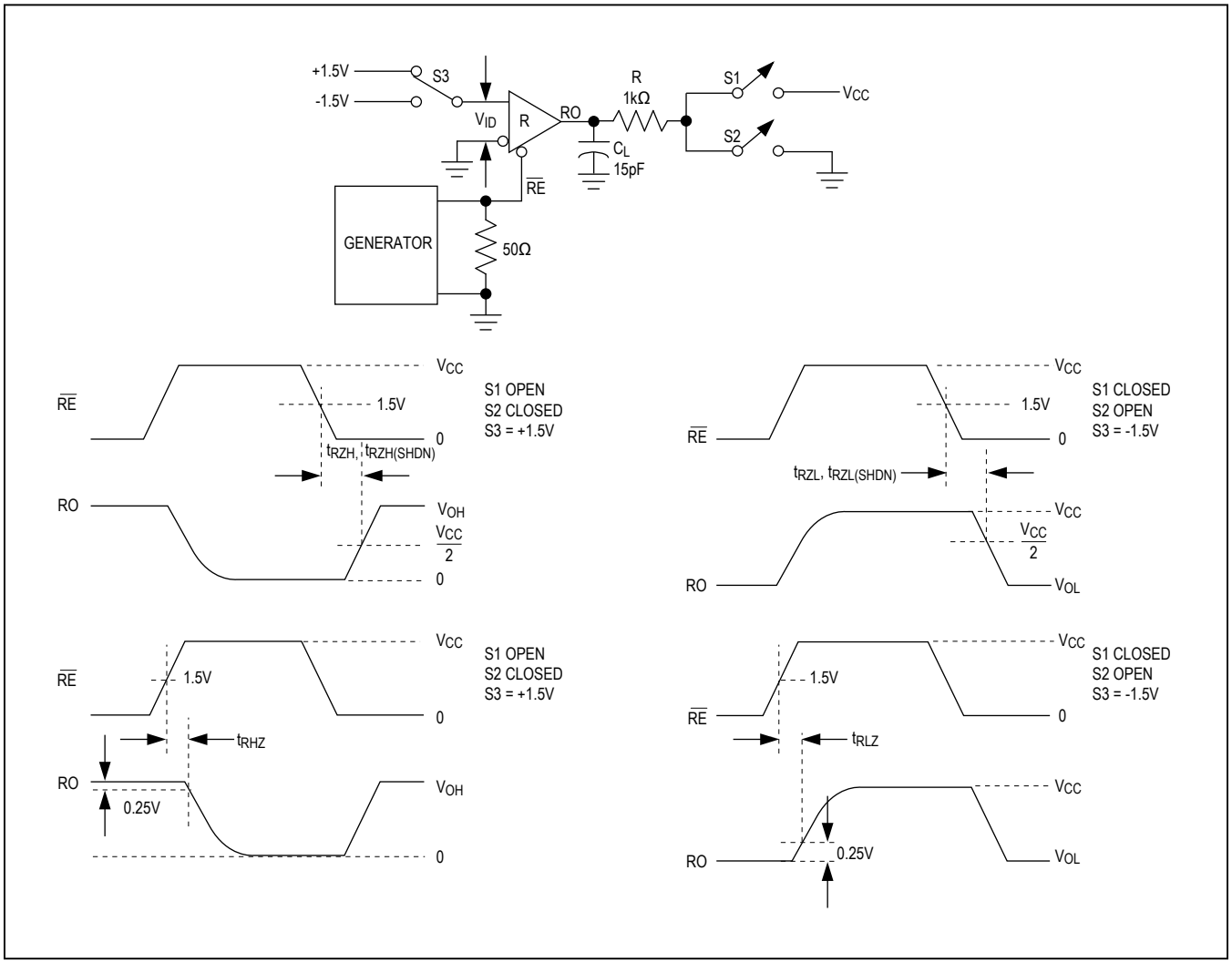

Figure 8. Receiver Enable and Disable Times

Typical Operating Characteristics

(V_{CC} = +5V, T_A = +25°C, unless otherwise specified.)

NO-LOAD SUPPLY CURRENT vs. TEMPERATURE

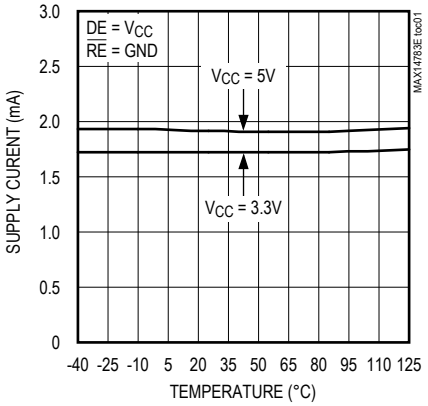

SHUTDOWN SUPPLY CURRENT vs. TEMPERATURE

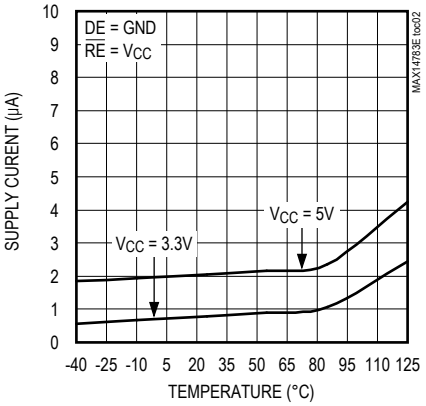

SUPPLY CURRENT vs. DATA RATE

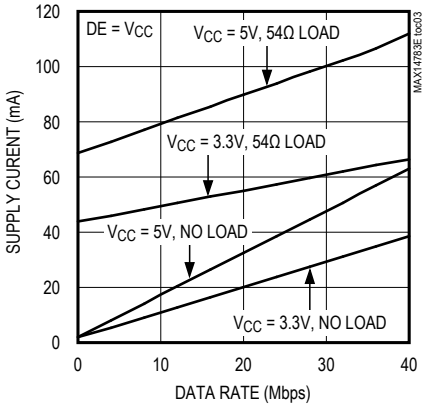

RECEIVER-OUTPUT HIGH VOLTAGE vs. OUTPUT CURRENT

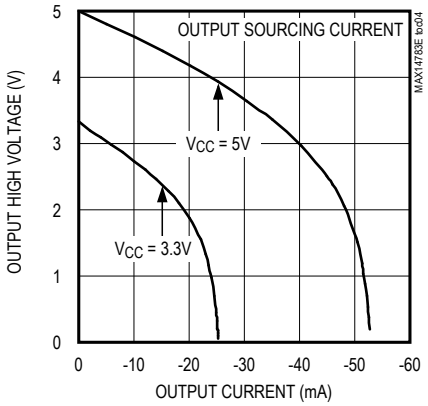

RECEIVER-OUTPUT LOW VOLTAGE vs. OUTPUT CURRENT

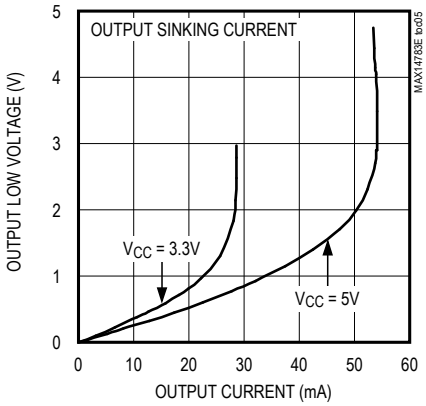

DRIVER OUTPUT CURRENT vs. DIFFERENTIAL OUTPUT VOLTAGE

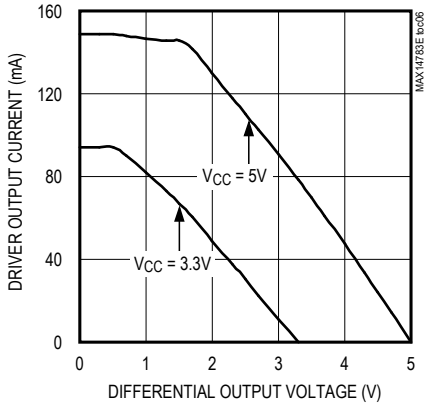

DIFFERENTIAL DRIVER OUTPUT VOLTAGE vs. TEMPERATURE

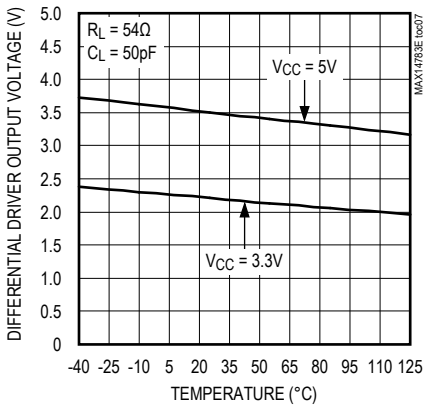

DRIVER OUTPUT CURRENT vs. OUTPUT HIGH VOLTAGE

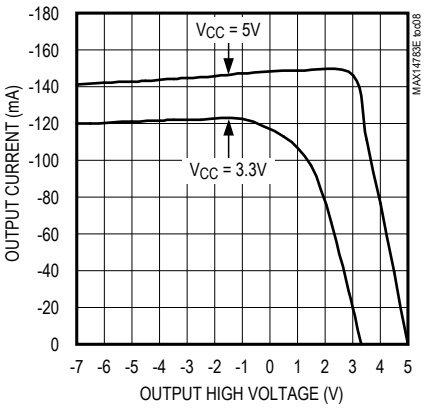

Typical Operating Characteristics (continued)

(V_{CC} = +5V, T_A = +25°C, unless otherwise specified.)

DRIVER OUTPUT CURRENT vs. OUTPUT LOW VOLTAGE

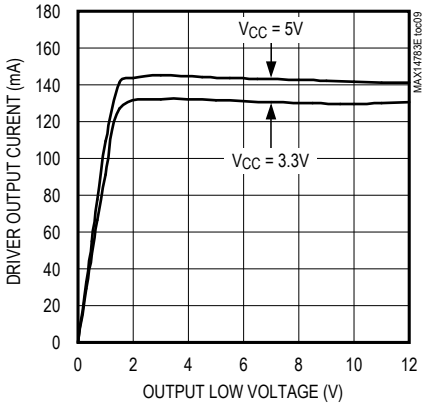

DRIVER PROPAGATION DELAY vs. TEMPERATURE

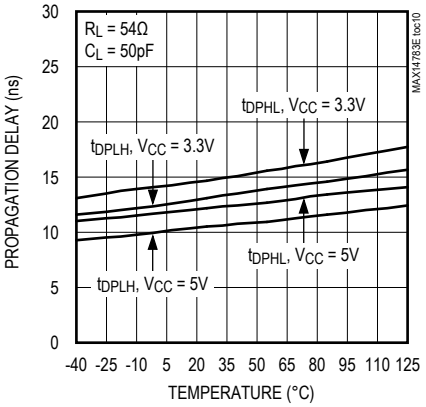

DIFFERENTIAL DRIVER SKEW vs. TEMPERATURE

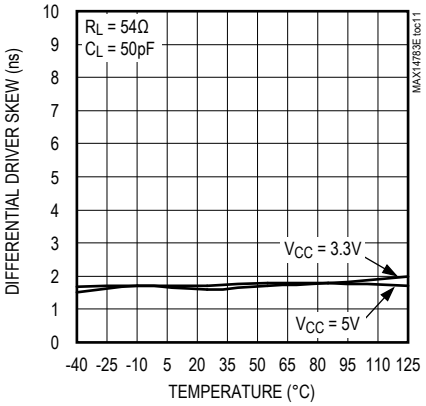

DRIVER-OUTPUT RISE/FALL TIME vs. TEMPERATURE

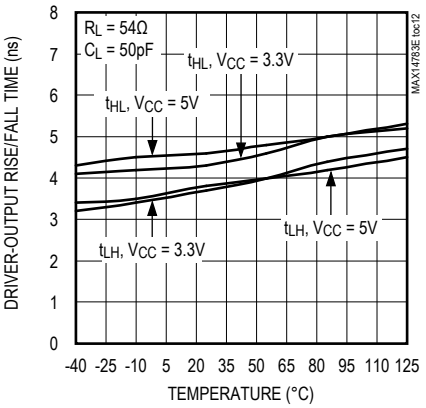

DRIVER-OUTPUT TRANSITION SKEW vs. TEMPERATURE

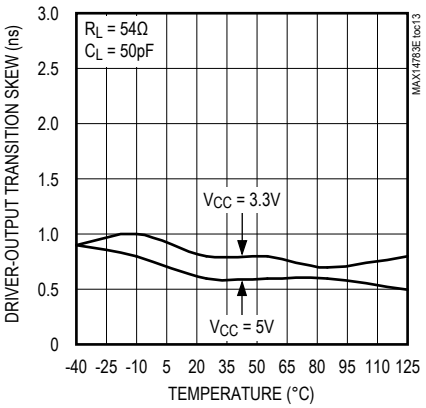

RECEIVER PROPAGATION DELAY vs. TEMPERATURE

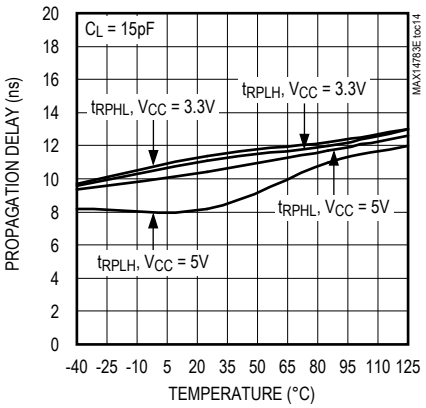

DRIVER/RECEIVER PROPAGATION DELAY

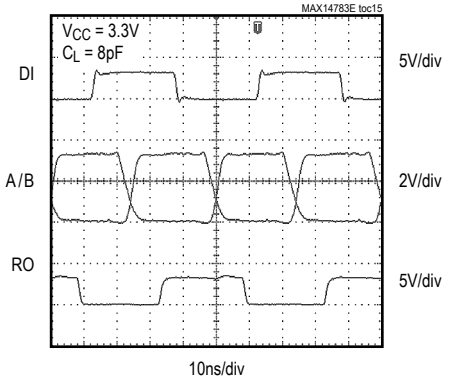

DIFFERENTIAL INPUT CAPACITANCE vs. FREQUENCY

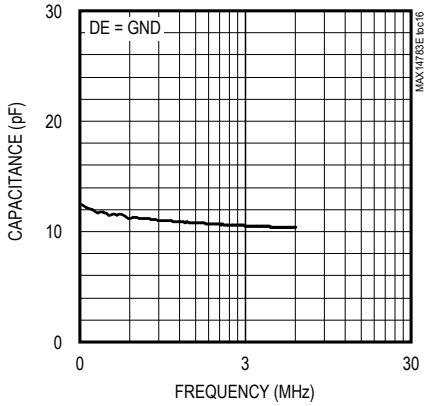

Pin Configuration

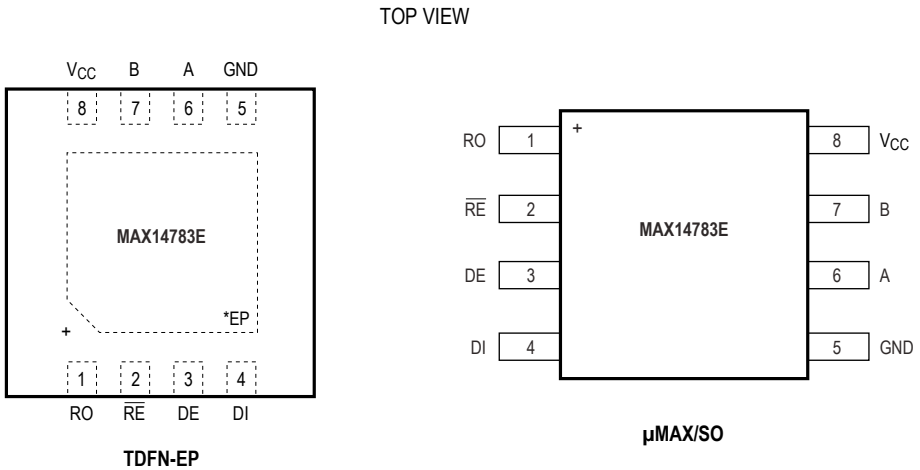

*CONNECT EXPOSED PAD (EP) TO GND

Pin Description

PIN	NAME	FUNCTION
1	RO	Receiver Output. See *Function Tables*.
2	$\overline{RE}$	Receiver Output Enable. Drive $\overline{RE}$ low to enable RO. Drive $\overline{RE}$ high to disable the receiver. RO is high impedance when $\overline{RE}$ is high. Drive $\overline{RE}$ high and pull DE low to enter low-power shutdown mode.
3	DE	Driver Output Enable. Drive DE high to enable the driver. Drive DE low to disable the driver. Driver outputs are high-impedance when the driver is disabled. Drive $\overline{RE}$ high and pull DE low to enter low-power shutdown mode.
4	DI	Driver Input. With DE high, a low on DI forces the A output low and the B output high. Similarly, a high on DI forces the A output high and B output low.
5	GND	Ground
6	A	Noninverting RS-485/RS-422 Receiver Input and Driver Output
7	B	Inverting RS-485/RS-422 Receiver Input and Driver Output
8	V_{CC}	Positive Supply Voltage Input. Bypass V_{CC} with a 0.1µF ceramic capacitor to ground.
—	EP	Exposed Pad (TDFN only). Connect EP to GND.

Function Tables

TRANSMITTING					
INPUTS			OUTPUTS		MODE
$\overline{RE}$	DE	DI	B	A	
X	1	1	0	1	Active
X	1	0	1	0	Active
0	0	X	High Impedance		Driver Disabled
1	0	X	High Impedance		Shutdown

RECEIVING				
INPUTS			OUTPUTS	MODE
$\overline{RE}$	DE	A-B	RO	
0	X	≥ -10mV	1	Active
0	X	≤ -200mV	0	Active
0	X	Open/Shorted	1	Active
1	1	X	High Impedance	Receiver Disabled
1	0	X	High Impedance	Shutdown

X = Don't care

Detailed Description

The MAX14783E is a 3.3V/5V ESD-protected RS-485/RS-422 transceiver intended for high-speed, half-duplex communications. Integrated hot-swap functionality eliminates false transitions on the bus during power-up or hot insertion.

The device features fail-safe receiver inputs guaranteeing a logic-high receiver output when inputs are shorted or open. The IC has a 1-unit load receiver input impedance, allowing up to 32 transceivers on the bus.

True Fail Safe

The MAX14783E guarantees a logic-high receiver output when the receiver inputs are shorted or open, or when they are connected to a terminated transmission line with all drivers disabled. If the differential receiver input voltage (A–B) is greater than or equal to -10mV, RO is logic-high.

Driver Single-Ended Operation

The A and B outputs can either be used in the standard differential operating mode, or can be used as single-ended outputs. Since the A and B driver outputs swing rail-to-rail, they can individually be used as standard TTL logic outputs.

Hot-Swap Capability

Hot-Swap Inputs

When circuit boards are inserted in a hot or powered backplane, disturbances on the enable inputs and differential receiver inputs can lead to data errors. Upon initial circuit board insertion, the processor undergoes its power-up sequence. During this period, the processor output drivers are high impedance and are unable to drive the DE and $\overline{RE}$ inputs of the MAX14783E to a defined logic level. Leakage currents up to 10µA from the high-impedance outputs of a controller could cause DE and $\overline{RE}$ to drift to an incorrect logic state. Additionally, parasitic circuit board capacitance could cause coupling of V_{CC} or GND to DE and $\overline{RE}$. These factors could improperly enable the driver or receiver. The MAX14783E features integrated hot-swap inputs that help to avoid these potential problems.

When V_{CC} rises, an internal pulldown circuit holds DE low and $\overline{RE}$ high. After the initial power-up sequence, the pulldown circuit becomes transparent, resetting the hot-swap-tolerable inputs.

Hot-Swap Input Circuitry

The DE and $\overline{RE}$ enable inputs feature hot-swap capability. At the input, there are two nMOS devices, M1 and M2 (Figure 9). When V_{CC} ramps from 0V, an internal 10µs timer turns on M2 and sets the SR latch that also turns

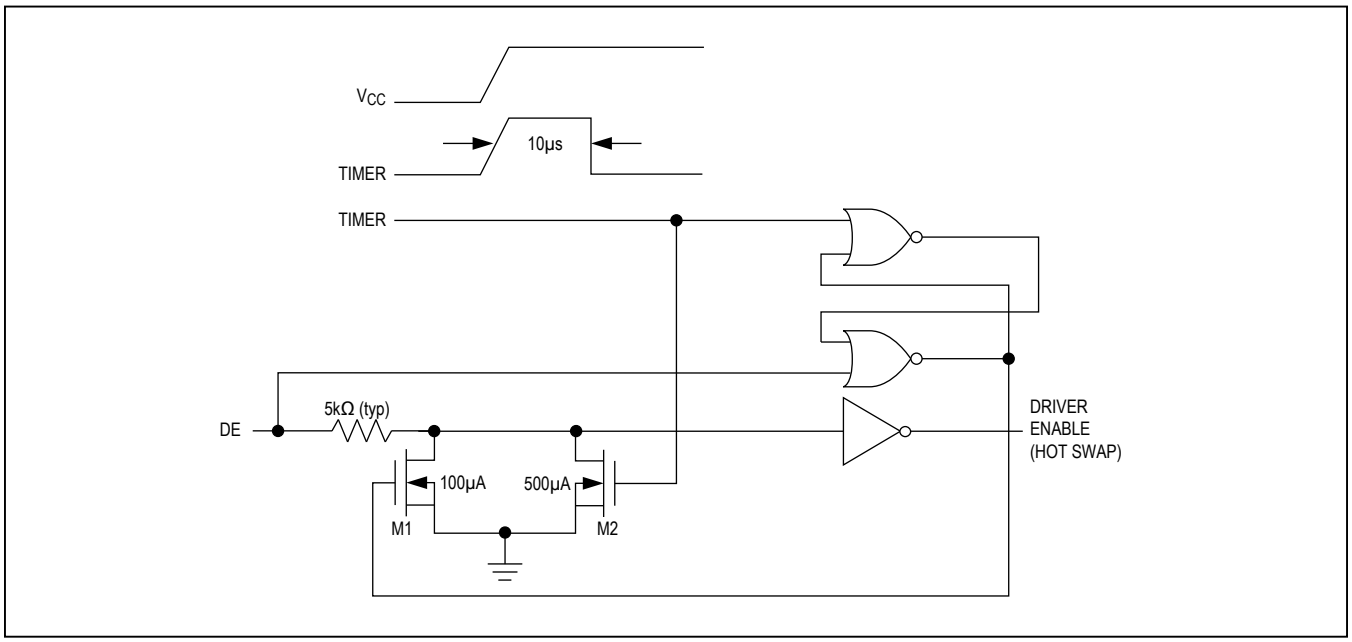

Figure 9. Simplified Structure of the Driver Enable (DE) Pin

on M1. Transistors M2 (a 500µA current sink) and M1 (a 100µA current sink) pull DE to GND through a 5kΩ (typ) resistor. M2 is designed to pull DE to the disabled state against an external parasitic capacitance up to 100pF that can drive DE high. After 10µs, the timer deactivates M2 while M1 remains on, holding DE low against three-state leakages that can drive DE high. M1 remains on until an external source overcomes the required input current. At this time, the SR latch resets and M1 turns off. When M1 turns off, DE reverts to a standard, high-impedance CMOS input. Whenever V_{CC} drops below 1V, the hot-swap input is reset.

A complementary circuit employing two pMOS devices pulls $\overline{RE}$ to V_{CC}.

±35kV ESD Protection

ESD protection structures are incorporated on all pins to protect against electrostatic discharges encountered during handling and assembly. The driver outputs and receiver inputs of the MAX14783E have extra protection against static electricity. The ESD structures withstand high ESD in all states: normal operation, shutdown, and powered down. After an ESD event, the MAX14783E keeps working without latch-up or damage.

ESD protection can be tested in various ways. The transmitter outputs and receiver inputs of the MAX14783E are characterized for protection to the following limits:

- ±35kV HBM
- ±20kV using the Air-Gap Discharge method specified in IEC 61000-4-2
- ±12kV using the Contact Discharge method specified in IEC 61000-4-2

ESD Test Conditions

ESD performance depends on a variety of conditions. Contact Maxim for a reliability report that documents test setup, test methodology, and test results.

Human Body Model (HBM)

Figure 10 shows the HBM, and Figure 11 shows the current waveform it generates when discharged into a low-impedance state. This model consists of a 100pF capacitor charged to the ESD voltage of interest, which is then discharged into the test device through a 1.5kΩ resistor.

IEC 61000-4-2

The IEC 61000-4-2 standard covers ESD testing and performance of finished equipment. However, it does not specifically refer to integrated circuits. The MAX14783E helps in designing equipment to meet IEC 61000-4-2 without the need for additional ESD protection components.

The major difference between tests done using the HBM and IEC 61000-4-2 is higher peak current in IEC 61000-4-2 because series resistance is lower in the IEC 61000-4-2 model. Hence, the ESD withstand voltage measured to IEC 61000-4-2 is generally lower than that measured using the HBM.

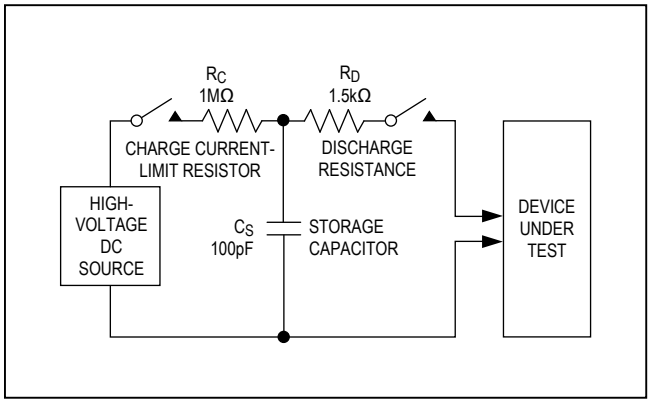

Figure 10. Human Body ESD Test Model

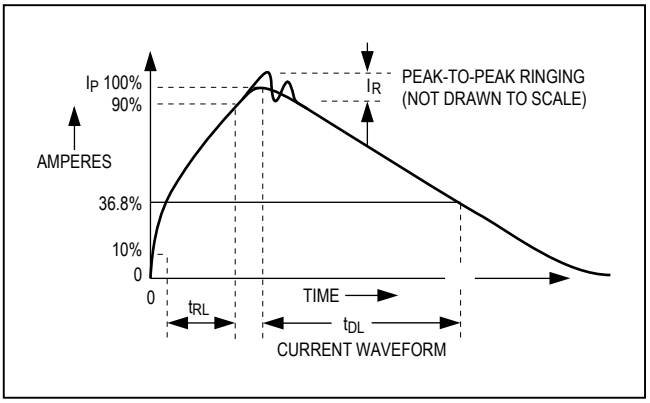

Figure 11. Human Body Current Waveform

Figure 12 shows the IEC 61000-4-2 model, and Figure 13 shows the current waveform for IEC 61000-4-2 ESD Contact Discharge test.

Applications Information

Driver Output Protection

Two mechanisms prevent excessive output current and power dissipation caused by faults or by bus connection. The first, a current limit on the output stage provides immediate protection against short circuits over the whole common-mode voltage range. The second, a thermal-shutdown circuit, forces the driver outputs into a high-impedance state if the die temperature exceeds +160°C (typ).

Low-Power Shutdown Mode

Low-power shutdown mode is initiated by bringing $\overline{RE}$ high and DE low. In shutdown, the devices draw less than 10µA of supply current.

$\overline{RE}$ and DE can be connected together and driven simultaneously. The MAX14783E is guaranteed not to enter shutdown if $\overline{RE}$ is high and DE is low for less than 50ns. If the inputs are in this state for at least 800ns (max), the device is guaranteed to enter shutdown.

Typical Applications

The MAX14783E transceiver is designed for bidirectional data communications on multipoint bus transmission lines. Figure 14 shows a typical network application circuit. To minimize reflections, terminate the line at both ends with its characteristic impedance and keep stub lengths off the main line as short as possible.

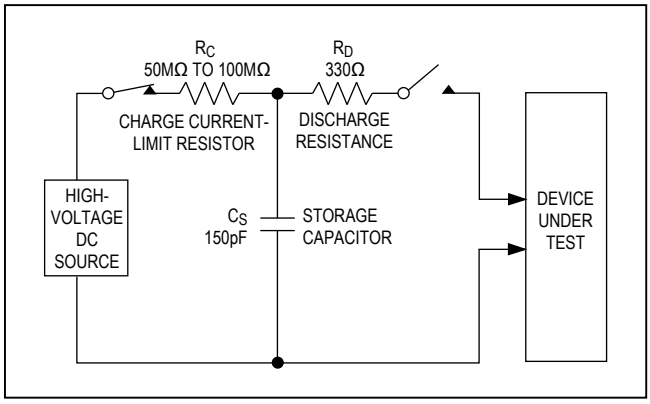

Figure 12. IEC 61000-4-2 ESD Test Model

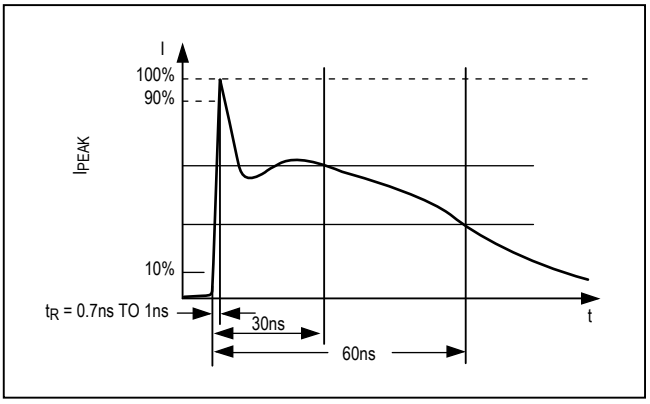

Figure 13. IEC 61000-4-2 ESD Generator Current Waveform

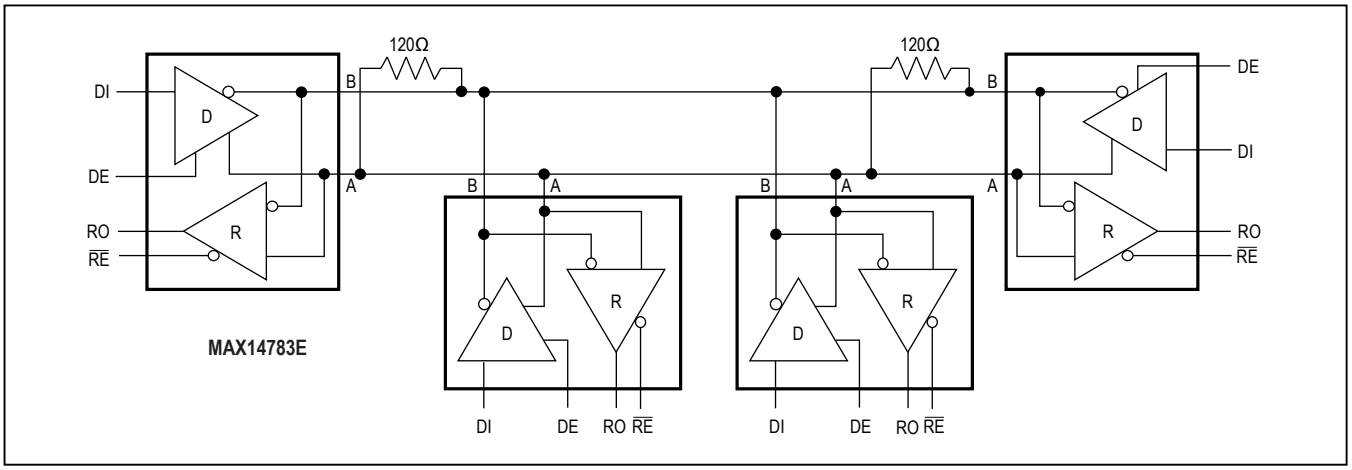

Figure 14. Typical Half-Duplex RS-485 Network

Chip Information

PROCESS: BiCMOS

Package Information

For the latest package outline information and land patterns (footprints), go to **www.maximintegrated.com/packages**. Note that a "+", "#", or "-" in the package code indicates RoHS status only. Package drawings may show a different suffix character, but the drawing pertains to the package regardless of RoHS status.

PACKAGE TYPE	PACKAGE CODE	OUTLINE NO.	LAND PATTERN NO.
8 µMAX	U8+1	21-0036	90-0092
8 SOIC	S8+4	21-0041	90-0096
8 TDFN-EP	T833+2	21-0137	90-0059

Ordering Information

PART	SUPPLY RANGE	DATA RATE (MAX)	TEMP RANGE	PIN-PACKAGE
MAX14783EEUA+	3.0V to 5.5V	30Mbps	-40°C to +85°C	8 µMAX
MAX14783EESA+	3.0V to 5.5V	40Mbps	-40°C to +85°C	8 SO
MAX14783EATA+	3.0V to 5.5V	42Mbps	-40°C to +125°C	8 TDFN-EP*
MAX14783EASA+	3.0V to 3.6V	42Mbps	-40°C to +125°C	8 SO
	3.0V to 5.5V	16Mbps		
MAX14783EAUA+	3.0V to 3.6V	42Mbps	-40°C to +125°C	8 µMAX
	3.0V to 5.5V	6Mbps		

+Denotes lead(Pb)-free/RoHS-compliant package.

**EP = Exposed paddle.*

Revision History

REVISION NUMBER	REVISION DATE	DESCRIPTION	PAGES CHANGED
0	6/13	Initial release	—
1	1/15	Updated page 1 content	

For pricing, delivery, and ordering information, please contact Maxim Direct at 1-888-629-4642, or visit Maxim Integrated's website at www.maximintegrated.com.

Maxim Integrated cannot assume responsibility for use of any circuitry other than circuitry entirely embodied in a Maxim Integrated product. No circuit patent licenses are implied. Maxim Integrated reserves the right to change the circuitry and specifications without notice at any time. The parametric values (min and max limits) shown in the Electrical Characteristics table are guaranteed. Other parametric values quoted in this data sheet are provided for guidance.

Maxim Integrated and the Maxim Integrated logo are trademarks of Maxim Integrated Products, Inc. © 2015 Maxim Integrated Products, Inc.

Мы молодая и активно развивающаяся компания в области поставок электронных компонентов. Мы поставляем электронные компоненты отечественного и импортного производства напрямую от производителей и с крупнейших складов мира.

Благодаря сотрудничеству с мировыми поставщиками мы осуществляем комплексные и плановые поставки широчайшего спектра электронных компонентов.

Собственная эффективная логистика и склад в обеспечивает надежную поставку продукции в точно указанные сроки по всей России.

Мы осуществляем техническую поддержку нашим клиентам и предпродажную проверку качества продукции. На все поставляемые продукты мы предоставляем гарантию .

Осуществляем поставки продукции под контролем ВП МО РФ на предприятия военно-промышленного комплекса России , а также работаем в рамках 275 ФЗ с открытием отдельных счетов в уполномоченном банке. Система менеджмента качества компании соответствует требованиям ГОСТ ISO 9001.

Минимальные сроки поставки, гибкие цены, неограниченный ассортимент и индивидуальный подход к клиентам являются основой для выстраивания долгосрочного и эффективного сотрудничества с предприятиями радиоэлектронной промышленности, предприятиями ВПК и научно-исследовательскими институтами России.

С нами вы становитесь еще успешнее!

Наши контакты:

Телефон: +7 812 627 14 35

Электронная почта: sales@st-electron.ru

Адрес: 198099, Санкт-Петербург, Промышленная ул, дом № 19, литера Н, помещение 100-Н Офис 331