MCP3004/3008

2.7V 4-Channel/8-Channel 10-Bit A/D Converters with SPI Serial Interface

Features

- 10-bit resolution
- ± 1 LSB max DNL
- ± 1 LSB max INL
- 4 (MCP3004) or 8 (MCP3008) input channels
- Analog inputs programmable as single-ended or pseudo-differential pairs
- On-chip sample and hold
- SPI serial interface (modes 0,0 and 1,1)
- Single supply operation: 2.7V - 5.5V
- 200 ksps max. sampling rate at V_{DD} = 5V
- 75 ksps max. sampling rate at V_{DD} = 2.7V
- Low power CMOS technology
- 5 nA typical standby current, 2 µA max.
- 500 µA max. active current at 5V
- Industrial temp range: -40°C to +85°C
- Available in PDIP, SOIC and TSSOP packages

Applications

- Sensor Interface
- Process Control
- Data Acquisition
- Battery Operated Systems

Functional Block Diagram

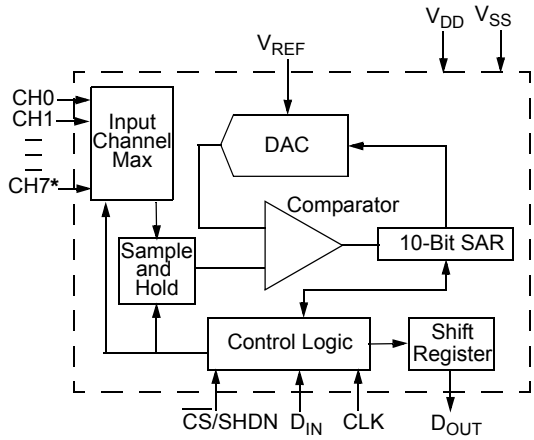

* **Note:** Channels 4-7 are available on MCP3008 Only

Description

The Microchip Technology Inc. MCP3004/3008 devices are successive approximation 10-bit Analog-to-Digital (A/D) converters with on-board sample and hold circuitry. The MCP3004 is programmable to provide two pseudo-differential input pairs or four single-ended inputs. The MCP3008 is programmable to provide four pseudo-differential input pairs or eight single-ended inputs. Differential Nonlinearity (DNL) and Integral Nonlinearity (INL) are specified at ±1 LSB. Communication with the devices is accomplished using a simple serial interface compatible with the SPI protocol. The devices are capable of conversion rates of up to 200 ksps. The MCP3004/3008 devices operate over a broad voltage range (2.7V - 5.5V). Low-current design permits operation with typical standby currents of only 5 nA and typical active currents of 320 µA. The MCP3004 is offered in 14-pin PDIP, 150 mil SOIC and TSSOP packages, while the MCP3008 is offered in 16-pin PDIP and SOIC packages.

Package Types

PDIP, SOIC, TSSOP

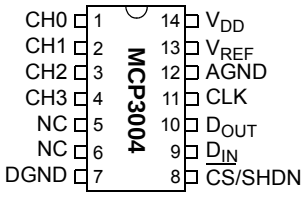

PDIP, SOIC

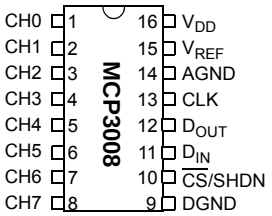

© 2008 Microchip Technology Inc.

NOTES:

© 2008 Microchip Technology Inc.

1.0 ELECTRICAL CHARACTERISTICS

Absolute Maximum Ratings †

V_{DD} 7.0V
All Inputs and Outputs w.r.t. V_{SS} .....– 0.6V to V_{DD} + 0.6V
Storage Temperature .....–65°C to +150°C
Ambient temperature with power applied.....–65°C to +150°C
Soldering temperature of leads (10 seconds) .....+300°C
ESD Protection On All Pins (HBM) .....≥ 4 kV

† **Notice:** Stresses above those listed under "Absolute Maximum Ratings" may cause permanent damage to the device. This is a stress rating only and functional operation of the device at those or any other conditions above those indicated in the operational listings of this specification is not implied. Exposure to maximum rating conditions for extended periods may affect device reliability.

ELECTRICAL SPECIFICATIONS

Electrical Characteristics: Unless otherwise noted, all parameters apply at V_{DD} = 5V, V_{REF} = 5V, T_A = -40°C to +85°C, f_{SAMPLE} = 200 ksps and f_{CLK} = 18*f_{SAMPLE}. Unless otherwise noted, typical values apply for V_{DD} = 5V, T_A = +25°C.

Parameter	Sym	Min	Typ	Max	Units	Conditions
Conversion Rate						
Conversion Time	t_{CONV}	—	—	10	clock cycles	
Analog Input Sample Time	t_{SAMPLE}		1.5		clock cycles	
Throughput Rate	f_{SAMPLE}	—	—	200 75	ksps ksps	V_{DD} = V_{REF} = 5V V_{DD} = V_{REF} = 2.7V
DC Accuracy						
Resolution			10		bits	
Integral Nonlinearity	INL	—	±0.5	±1	LSB	
Differential Nonlinearity	DNL	—	±0.25	±1	LSB	No missing codes over temperature
Offset Error		—	—	±1.5	LSB	
Gain Error		—	—	±1.0	LSB	
Dynamic Performance						
Total Harmonic Distortion		—	-76		dB	V_{IN} = 0.1V to 4.9V@1 kHz
Signal-to-Noise and Distortion (SINAD)		—	61		dB	V_{IN} = 0.1V to 4.9V@1 kHz
Spurious Free Dynamic Range		—	78		dB	V_{IN} = 0.1V to 4.9V@1 kHz
Reference Input						
Voltage Range		0.25	—	V_{DD}	V	Note 2
Current Drain		—	100 0.001	150 3	µA µA	 $\overline{CS}$ = V_{DD} = 5V
Analog Inputs						
Input Voltage Range for CH0 or CH1 in Single-Ended Mode		V_{SS}	—	V_{REF}	V	
Input Voltage Range for IN+ in pseudo-differential mode		IN-	—	V_{REF}+IN-		
Input Voltage Range for IN- in pseudo-differential mode		V_{SS}-100	—	V_{SS}+100	mV	

Note 1: This parameter is established by characterization and not 100% tested.
2: See graphs that relate linearity performance to V_{REF} levels.
3: Because the sample cap will eventually lose charge, effective clock rates below 10 kHz can affect linearity performance, especially at elevated temperatures. See **Section 6.2 "Maintaining Minimum Clock Speed"**, "Maintaining Minimum Clock Speed", for more information.

© 2008 Microchip Technology Inc.

ELECTRICAL SPECIFICATIONS (CONTINUED)

Electrical Characteristics: Unless otherwise noted, all parameters apply at V_{DD} = 5V, V_{REF} = 5V, T_A = -40°C to +85°C, f_{SAMPLE} = 200 ksps and f_{CLK} = 18*f_{SAMPLE}. Unless otherwise noted, typical values apply for V_{DD} = 5V, T_A = +25°C.

Parameter	Sym	Min	Typ	Max	Units	Conditions
Leakage Current		—	0.001	±1	µA	
Switch Resistance		—	1000	—	Ω	See Figure 4-1
Sample Capacitor		—	20	—	pF	See Figure 4-1
Digital Input/Output						
Data Coding Format		Straight Binary				
High Level Input Voltage	V_{IH}	0.7 V_{DD}	—	—	V	
Low Level Input Voltage	V_{IL}		—	0.3 V_{DD}	V	
High Level Output Voltage	V_{OH}	4.1	—	—	V	I_{OH} = -1 mA, V_{DD} = 4.5V
Low Level Output Voltage	V_{OL}	—	—	0.4	V	I_{OL} = 1 mA, V_{DD} = 4.5V
Input Leakage Current	I_{LI}	-10	—	10	µA	V_{IN} = V_{SS} or V_{DD}
Output Leakage Current	I_{LO}	-10	—	10	µA	V_{OUT} = V_{SS} or V_{DD}
Pin Capacitance (All Inputs/Outputs)	C_{IN}, C_{OUT}	—	—	10	pF	V_{DD} = 5.0V (**Note 1**) T_A = 25°C, f = 1 MHz
Timing Parameters						
Clock Frequency	f_{CLK}	—	—	3.6 1.35	MHz MHz	V_{DD} = 5V (**Note 3**) V_{DD} = 2.7V (**Note 3**)
Clock High Time	t_{HI}	125	—	—	ns	
Clock Low Time	t_{LO}	125	—	—	ns	
$\overline{CS}$ Fall To First Rising CLK Edge	t_{SUCS}	100	—	—	ns	
$\overline{CS}$ Fall To Falling CLK Edge	t_{CSD}	—	—	0	ns	
Data Input Setup Time	t_{SU}	50	—	—	ns	
Data Input Hold Time	t_{HD}	50	—	—	ns	
CLK Fall To Output Data Valid	t_{DO}	—	—	125 200	ns ns	V_{DD} = 5V, See Figure 1-2 V_{DD} = 2.7V, See Figure 1-2
CLK Fall To Output Enable	t_{EN}	—	—	125 200	ns ns	V_{DD} = 5V, See Figure 1-2 V_{DD} = 2.7V, See Figure 1-2
$\overline{CS}$ Rise To Output Disable	t_{DIS}	—	—	100	ns	See Test Circuits, Figure 1-2
$\overline{CS}$ Disable Time	t_{CSH}	270	—	—	ns	
D_{OUT} Rise Time	t_R	—	—	100	ns	See Test Circuits, Figure 1-2 (**Note 1**)
D_{OUT} Fall Time	t_F	—	—	100	ns	See Test Circuits, Figure 1-2 (**Note 1**)

Note 1: This parameter is established by characterization and not 100% tested.
2: See graphs that relate linearity performance to V_{REF} levels.
3: Because the sample cap will eventually lose charge, effective clock rates below 10 kHz can affect linearity performance, especially at elevated temperatures. See **Section 6.2 "Maintaining Minimum Clock Speed"**, "Maintaining Minimum Clock Speed", for more information.

© 2008 Microchip Technology Inc.

ELECTRICAL SPECIFICATIONS (CONTINUED)

Electrical Characteristics: Unless otherwise noted, all parameters apply at V_{DD} = 5V, V_{REF} = 5V, T_A = -40°C to +85°C, f_{SAMPLE} = 200 ksps and f_{CLK} = 18*f_{SAMPLE}. Unless otherwise noted, typical values apply for V_{DD} = 5V, T_A = +25°C.						
Parameter	**Sym**	**Min**	**Typ**	**Max**	**Units**	**Conditions**
Power Requirements						
Operating Voltage	V_{DD}	2.7	—	5.5	V	
Operating Current	I_{DD}	—	425 225	550	µA	V_{DD} = V_{REF} = 5V, D_{OUT} unloaded V_{DD} = V_{REF} = 2.7V, D_{OUT} unloaded
Standby Current	I_{DDS}	—	0.005	2	µA	$\overline{CS}$ = V_{DD} = 5.0V

Note 1: This parameter is established by characterization and not 100% tested.
2: See graphs that relate linearity performance to V_{REF} levels.
3: Because the sample cap will eventually lose charge, effective clock rates below 10 kHz can affect linearity performance, especially at elevated temperatures. See **Section 6.2 "Maintaining Minimum Clock Speed"**, "Maintaining Minimum Clock Speed", for more information.

TEMPERATURE CHARACTERISTICS

Electrical Specifications: Unless otherwise indicated, V_{DD} = +2.7V to +5.5V, V_{SS} = GND.						
Parameters	**Sym**	**Min**	**Typ**	**Max**	**Units**	**Conditions**
Temperature Ranges						
Specified Temperature Range	T_A	-40	—	+85	°C	
Operating Temperature Range	T_A	-40	—	+85	°C	
Storage Temperature Range	T_A	-65	—	+150	°C	
Thermal Package Resistances						
Thermal Resistance, 14L-PDIP	θ_{JA}	—	70	—	°C/W	
Thermal Resistance, 14L-SOIC	θ_{JA}	—	108	—	°C/W	
Thermal Resistance, 14L-TSSOP	θ_{JA}	—	100	—	°C/W	
Thermal Resistance, 16L-PDIP	θ_{JA}	—	70	—	°C/W	
Thermal Resistance, 16L-SOIC	θ_{JA}	—	90	—	°C/W	

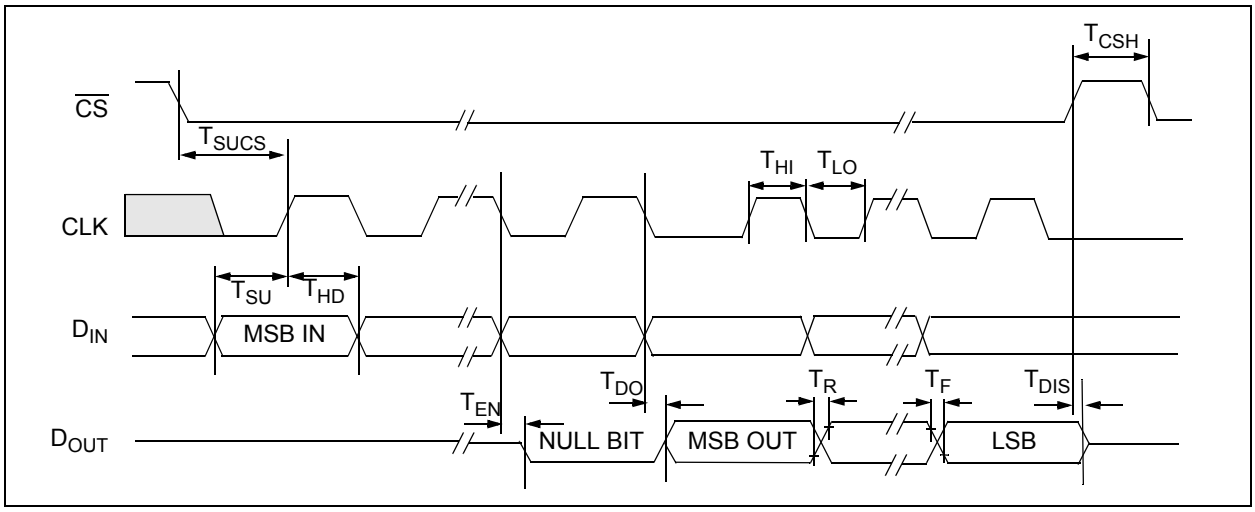

FIGURE 1-1: *Serial Interface Timing.*

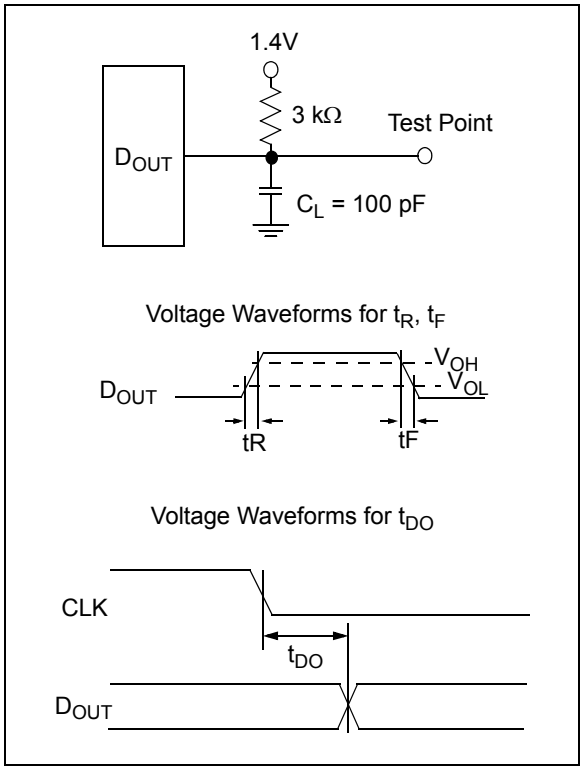

FIGURE 1-2: *Load Circuit for t_R, t_F, t_{DO}.*

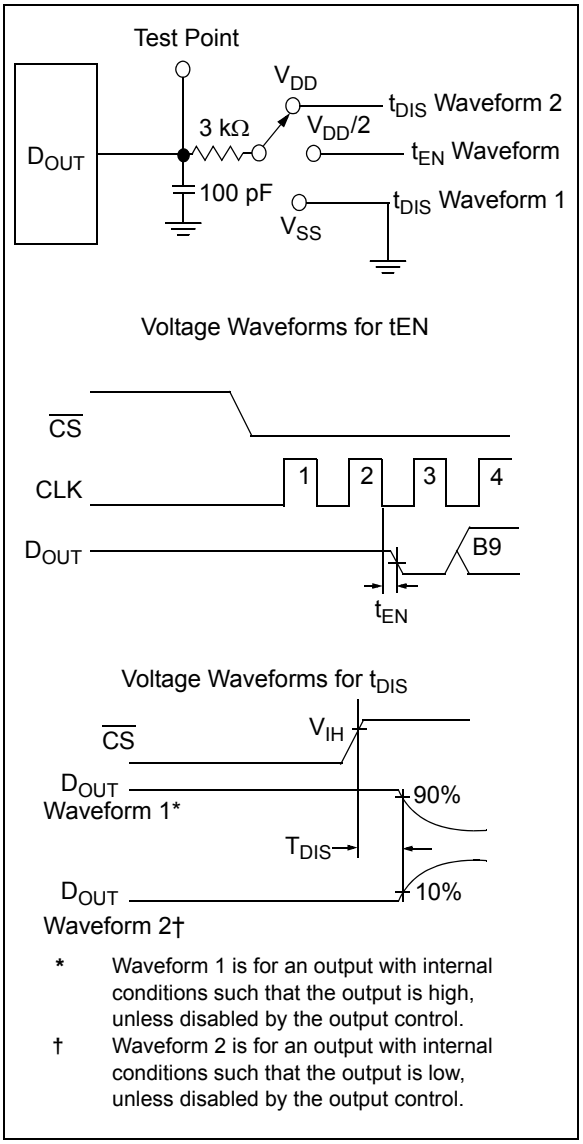

* Waveform 1 is for an output with internal conditions such that the output is high, unless disabled by the output control.

† Waveform 2 is for an output with internal conditions such that the output is low, unless disabled by the output control.

FIGURE 1-3: *Load circuit for t_{DIS} and t_{EN}.*

© 2008 Microchip Technology Inc.

2.0 TYPICAL PERFORMANCE CHARACTERISTICS

Note:	The graphs and tables provided following this note are a statistical summary based on a limited number of samples and are provided for informational purposes only. The performance characteristics listed herein are not tested or guaranteed. In some graphs or tables, the data presented may be outside the specified operating range (e.g., outside specified power supply range) and therefore outside the warranted range.

Note: Unless otherwise indicated, $V_{DD} = V_{REF} = 5V$, $f_{CLK} = 18^* f_{SAMPLE}$, $T_A = +25°C$.

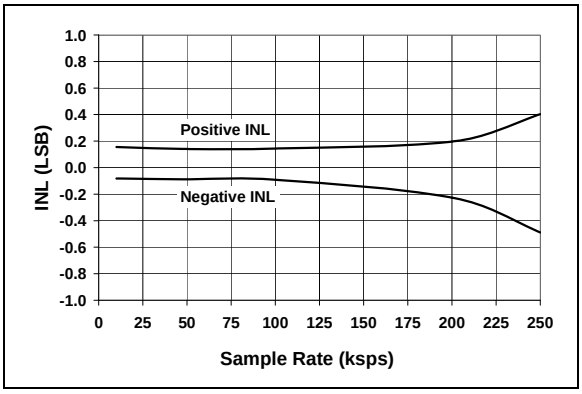

FIGURE 2-1: *Integral Nonlinearity (INL) vs. Sample Rate.*

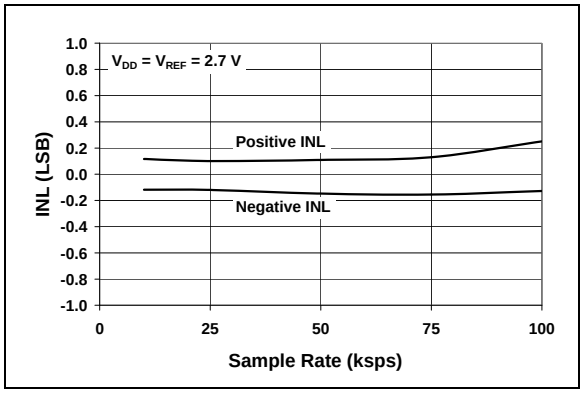

FIGURE 2-4: *Integral Nonlinearity (INL) vs. Sample Rate (V_{DD} = 2.7V).*

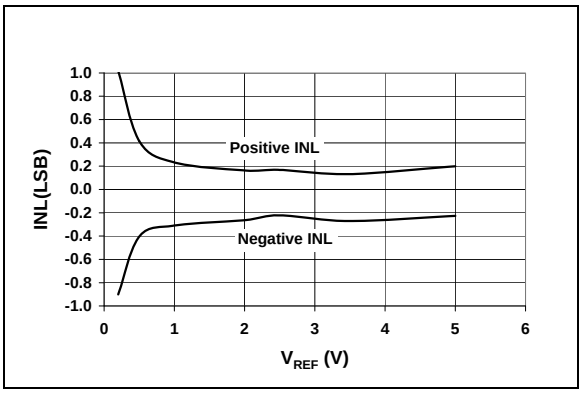

FIGURE 2-2: *Integral Nonlinearity (INL) vs. V_{REF}*

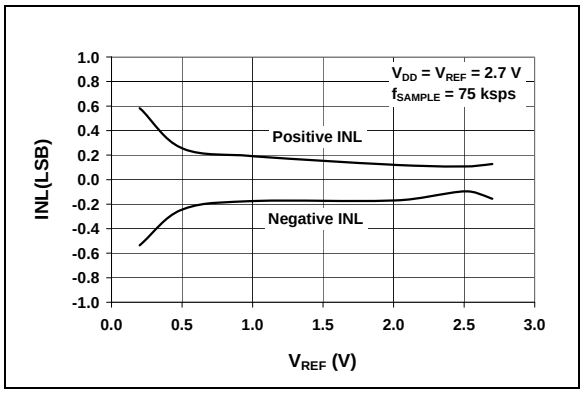

FIGURE 2-5: *Integral Nonlinearity (INL) vs. V_{REF} (V_{DD} = 2.7V).*

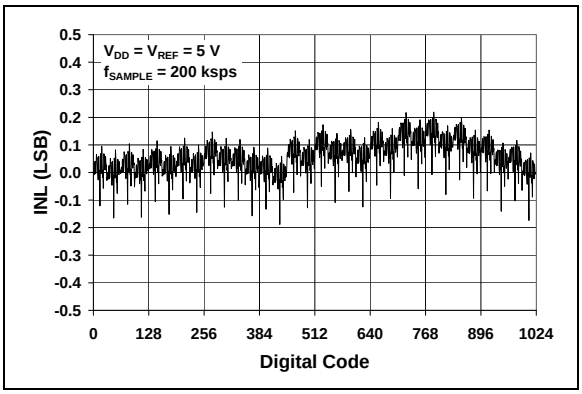

FIGURE 2-3: *Integral Nonlinearity (INL) vs. Code (Representative Part).*

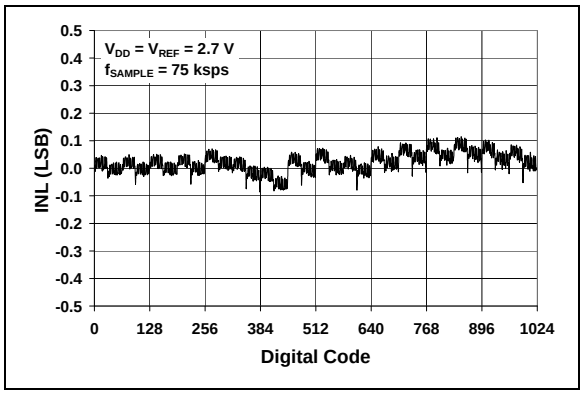

FIGURE 2-6: *Integral Nonlinearity (INL) vs. Code (Representative Part, V_{DD} = 2.7V).*

Note: Unless otherwise indicated, $V_{DD} = V_{REF} = 5V$, $f_{CLK} = 18^* f_{SAMPLE}$, $T_A = +25°C$.

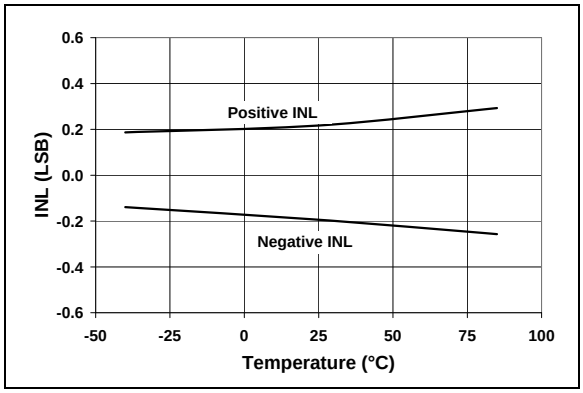

FIGURE 2-7: *Integral Nonlinearity (INL) vs. Temperature.*

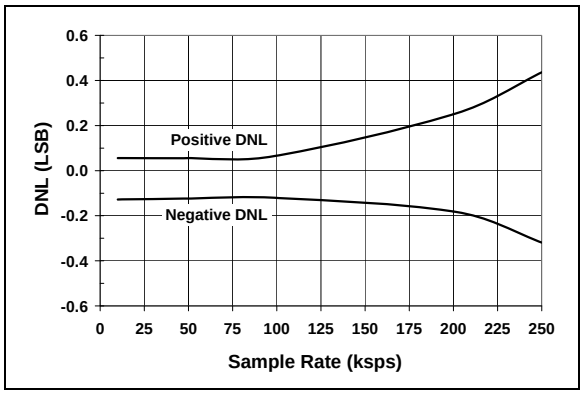

FIGURE 2-8: *Differential Nonlinearity (DNL) vs. Sample Rate.*

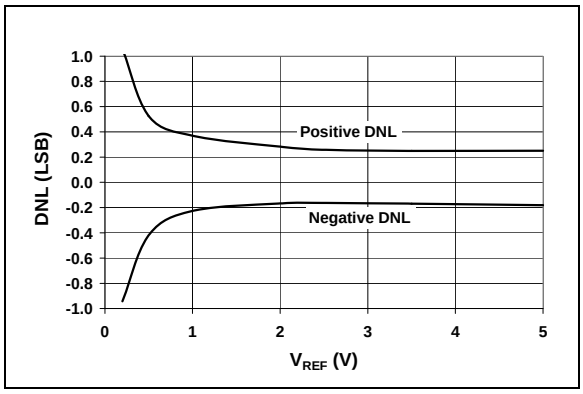

FIGURE 2-9: *Differential Nonlinearity (DNL) vs. V_{REF}*

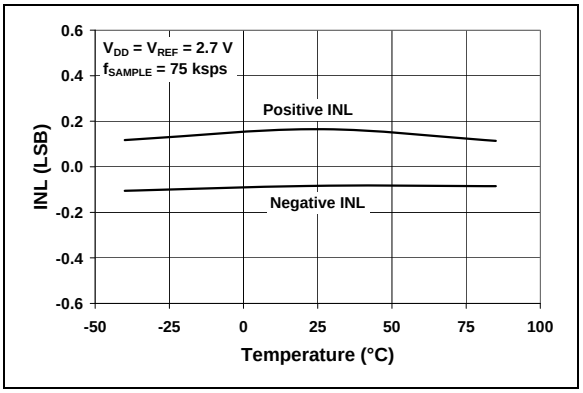

FIGURE 2-10: *Integral Nonlinearity (INL) vs. Temperature (V_{DD} = 2.7V).*

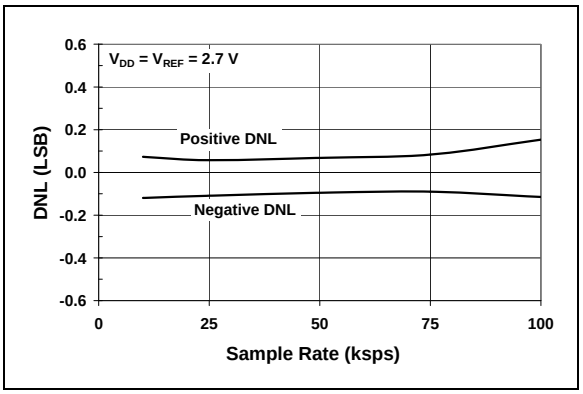

FIGURE 2-11: *Differential Nonlinearity (DNL) vs. Sample Rate (V_{DD} = 2.7V).*

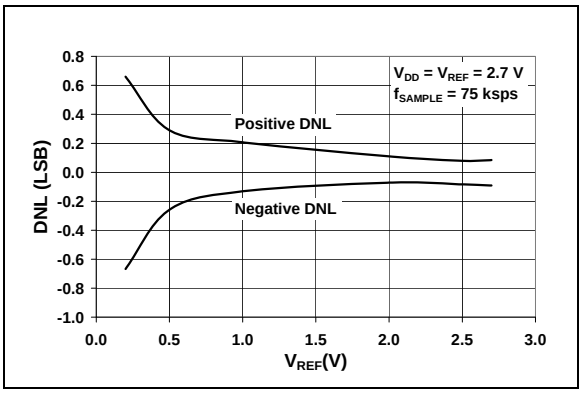

FIGURE 2-12: *Differential Nonlinearity (DNL) vs. V_{REF} (V_{DD} = 2.7V).*

© 2008 Microchip Technology Inc.

Note: Unless otherwise indicated, $V_{DD} = V_{REF} = 5V$, $f_{CLK} = 18^* f_{SAMPLE}$, $T_A = +25°C$.

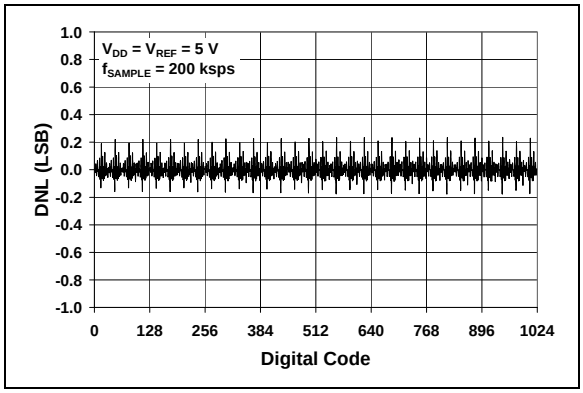

FIGURE 2-13: *Differential Nonlinearity (DNL) vs. Code (Representative Part).*

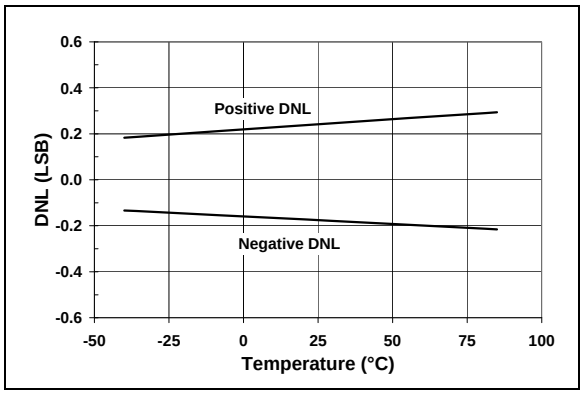

FIGURE 2-14: *Differential Nonlinearity (DNL) vs. Temperature.*

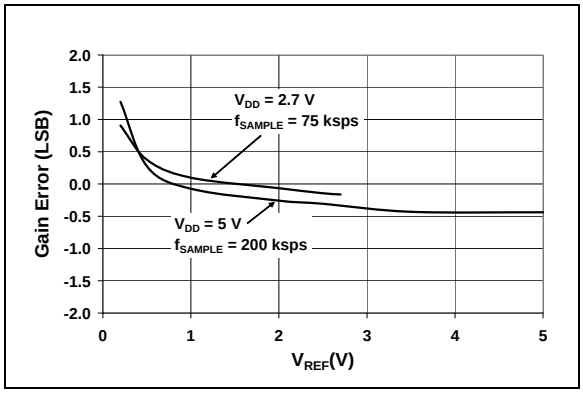

FIGURE 2-15: *Gain Error vs. V_{REF}*

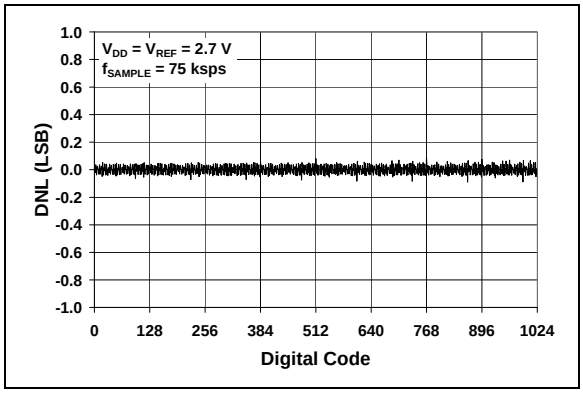

FIGURE 2-16: *Differential Nonlinearity (DNL) vs. Code (Representative Part, V_{DD} =2.7V).*

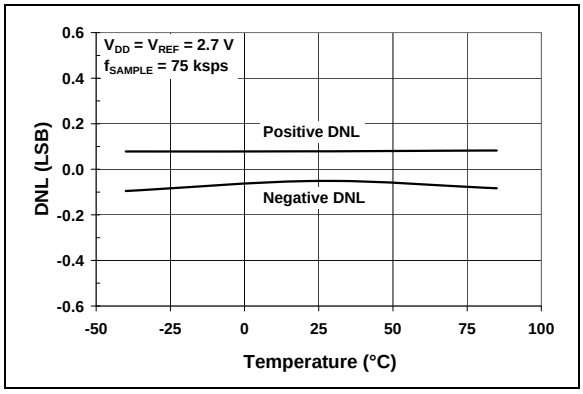

FIGURE 2-17: *Differential Nonlinearity (DNL) vs. Temperature (V_{DD} = 2.7V).*

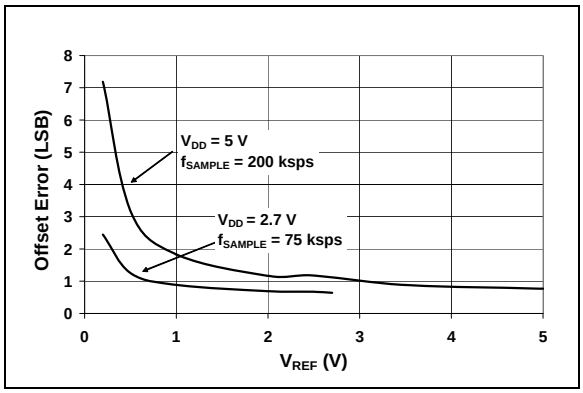

FIGURE 2-18: *Offset Error vs. V_{REF}*

Note: Unless otherwise indicated, $V_{DD} = V_{REF} = 5V$, $f_{CLK} = 18^* f_{SAMPLE}$, $T_A = +25°C$.

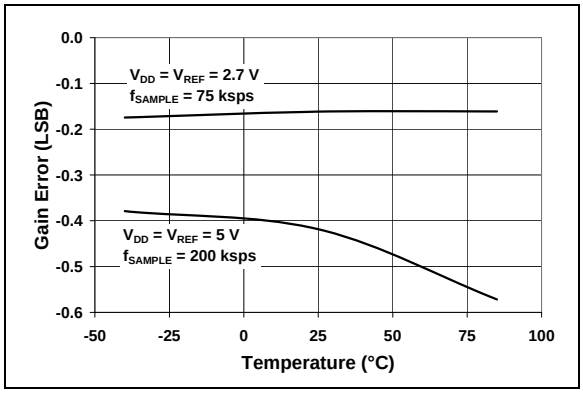

FIGURE 2-19: *Gain Error vs. Temperature.*

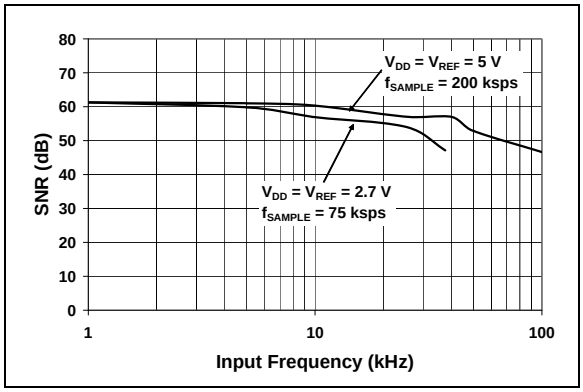

FIGURE 2-20: *Signal-to-Noise (SNR) vs. Input Frequency.*

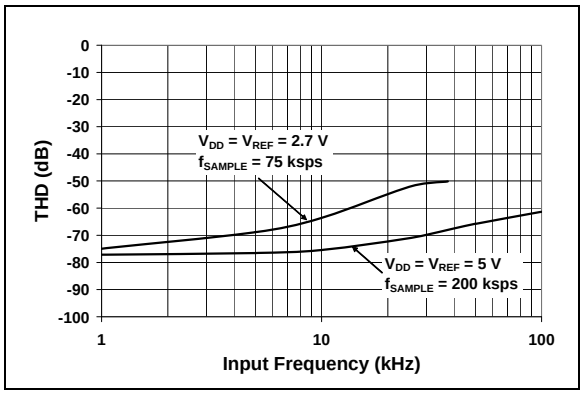

FIGURE 2-21: *Total Harmonic Distortion (THD) vs. Input Frequency.*

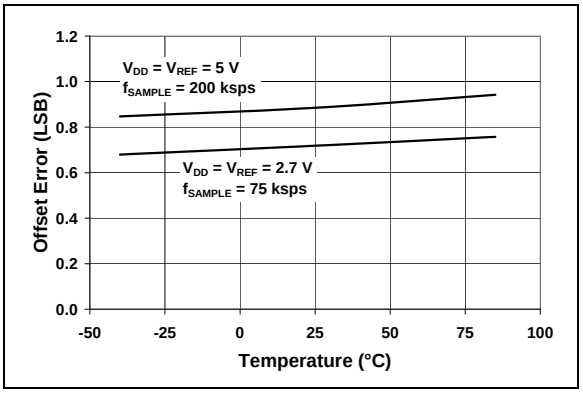

FIGURE 2-22: *Offset Error vs. Temperature.*

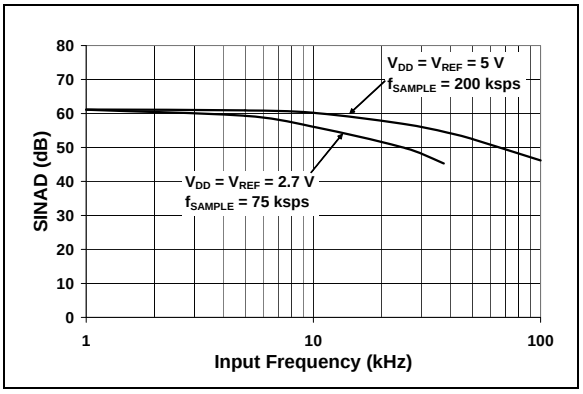

FIGURE 2-23: *Signal-to-Noise and Distortion (SINAD) vs. Input Frequency.*

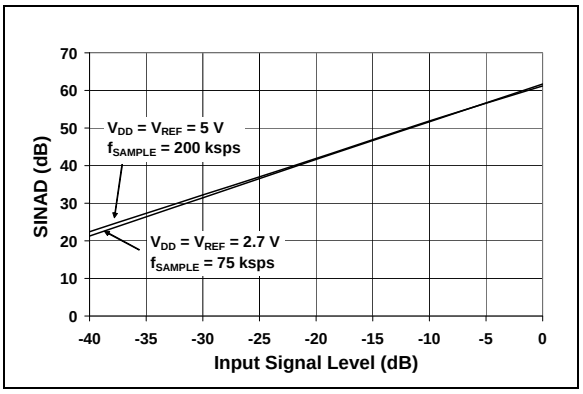

FIGURE 2-24: *Signal-to-Noise and Distortion (SINAD) vs. Input Signal Level.*

© 2008 Microchip Technology Inc.

Note: Unless otherwise indicated, $V_{DD} = V_{REF} = 5V$, $f_{CLK} = 18^* f_{SAMPLE}$, $T_A = +25°C$.

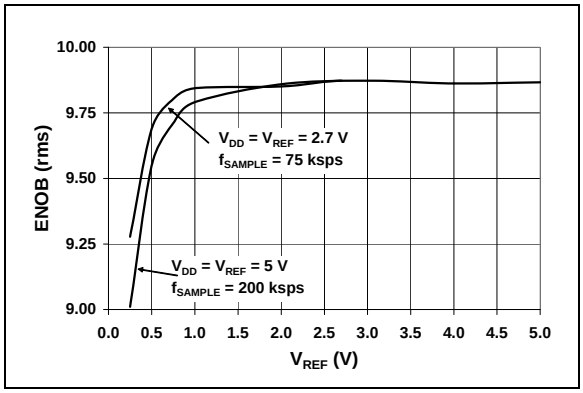

FIGURE 2-25: *Effective Number of Bits (ENOB) vs. V_{REF}*

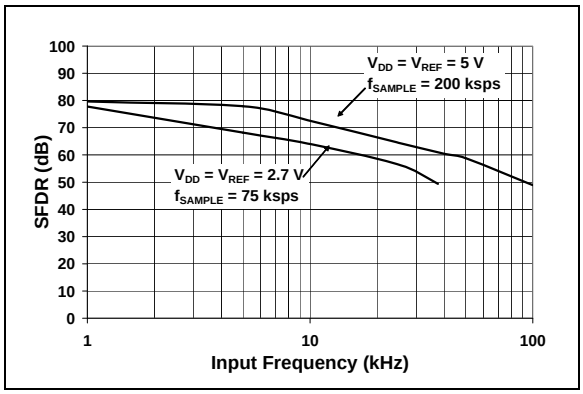

FIGURE 2-26: *Spurious Free Dynamic Range (SFDR) vs. Input Frequency.*

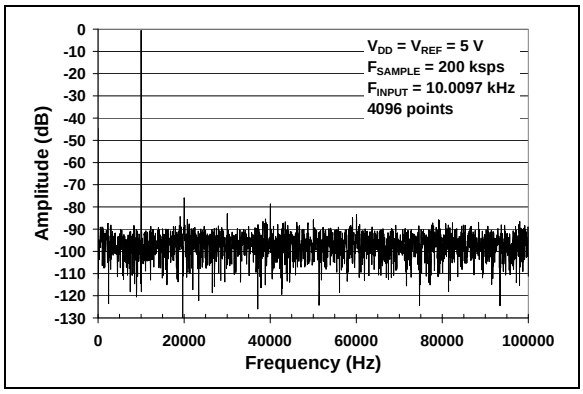

FIGURE 2-27: *Frequency Spectrum of 10 kHz Input (Representative Part).*

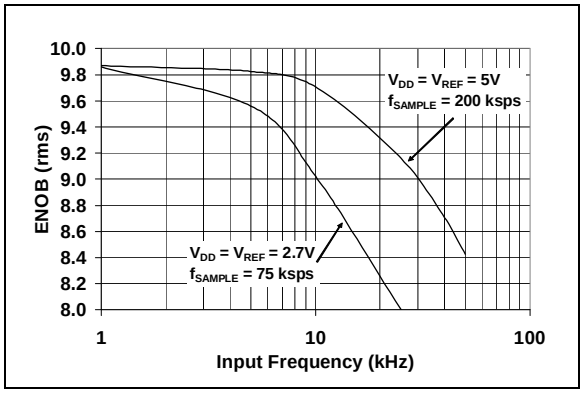

FIGURE 2-28: *Effective Number of Bits (ENOB) vs. Input Frequency.*

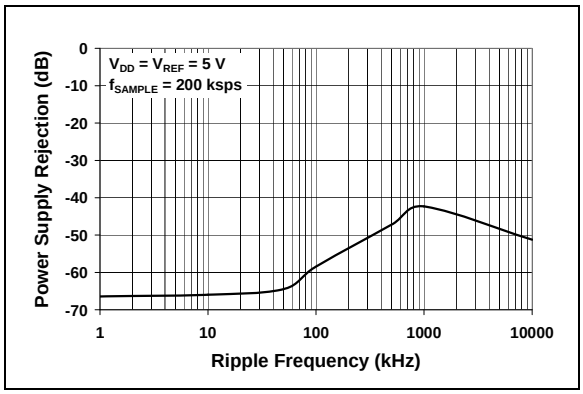

FIGURE 2-29: *Power Supply Rejection (PSR) vs. Ripple Frequency.*

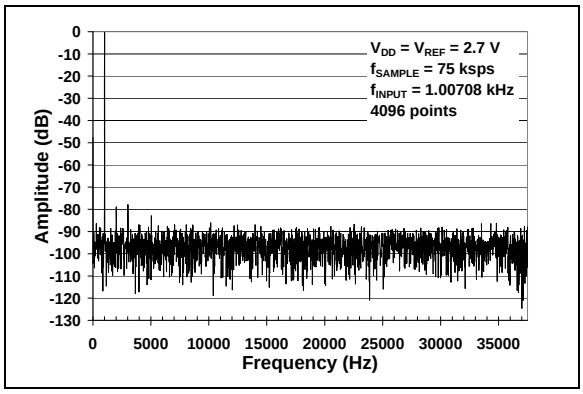

FIGURE 2-30: *Frequency Spectrum of 1 kHz Input (Representative Part, $V_{DD} = 2.7V$).*

Note: Unless otherwise indicated, $V_{DD} = V_{REF} = 5V$, $f_{CLK} = 18^* f_{SAMPLE}$, $T_A = +25°C$.

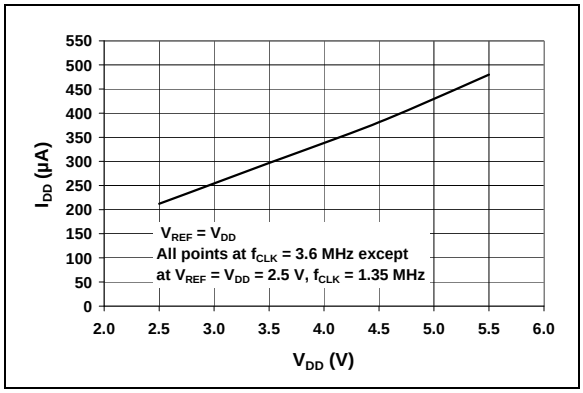

FIGURE 2-31: *I_{DD} vs. V_{DD}.*

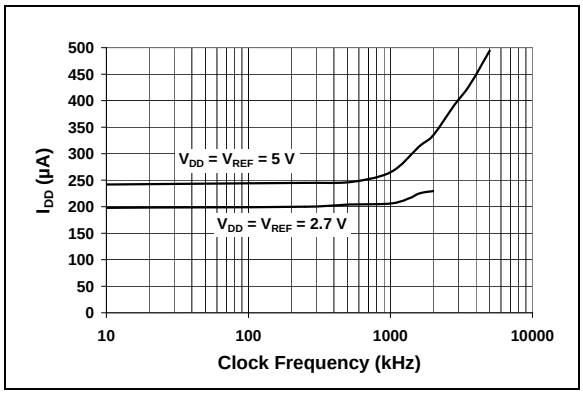

FIGURE 2-32: *I_{DD} vs. Clock Frequency.*

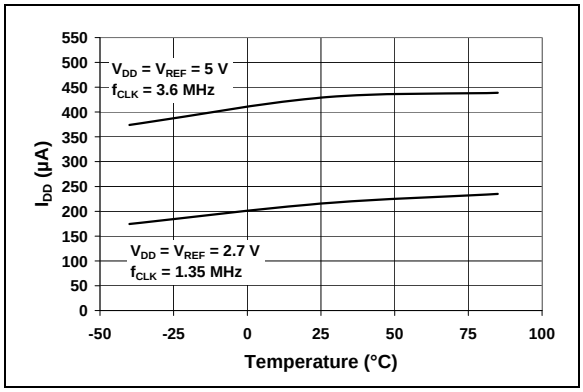

FIGURE 2-33: *I_{DD} vs. Temperature.*

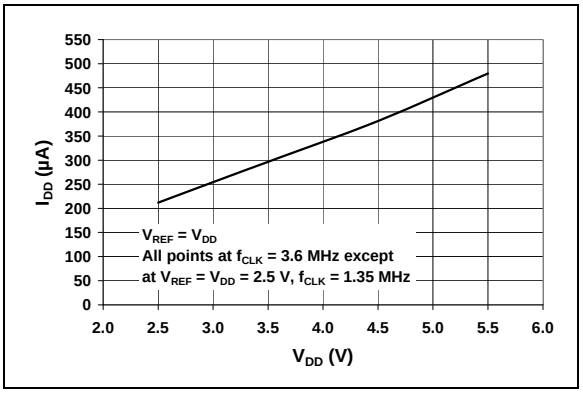

FIGURE 2-34: *I_{REF} vs. V_{DD}.*

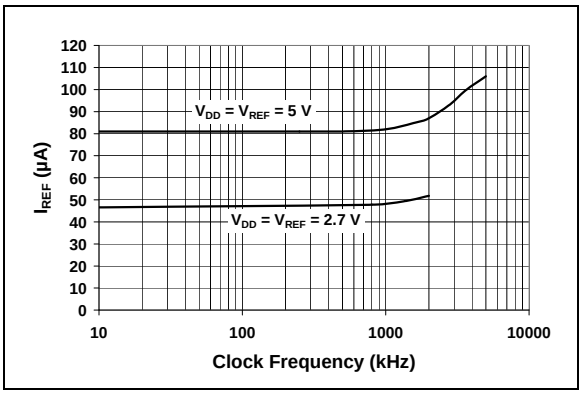

FIGURE 2-35: *I_{REF} vs. Clock Frequency.*

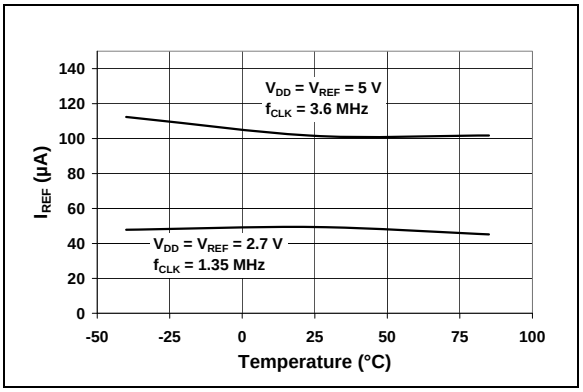

FIGURE 2-36: *I_{REF} vs. Temperature.*

© 2008 Microchip Technology Inc.

Note: Unless otherwise indicated, $V_{DD} = V_{REF} = 5V$, $f_{CLK} = 18^* f_{SAMPLE}$, $T_A = +25°C$.

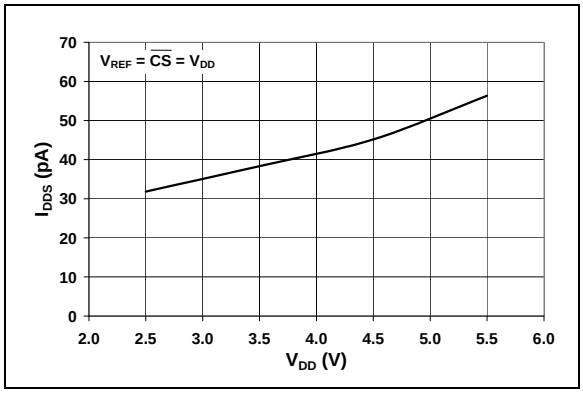

FIGURE 2-37: *I_{DDS} vs. V_{DD}.*

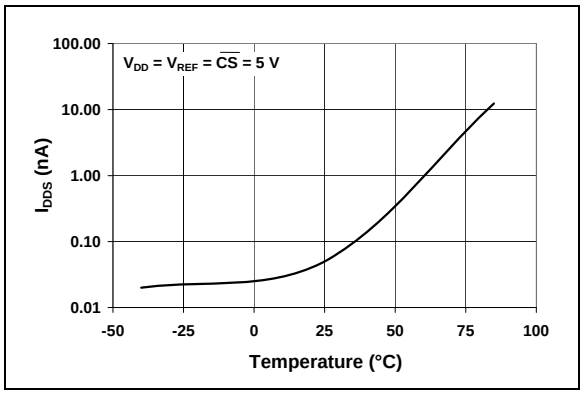

FIGURE 2-38: *I_{DDS} vs. Temperature.*

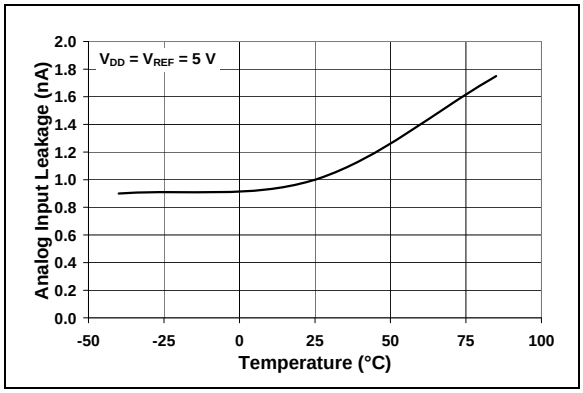

FIGURE 2-39: *Analog Input Leakage Current vs. Temperature.*

NOTES:

© 2008 Microchip Technology Inc.

3.0 PIN DESCRIPTIONS

The descriptions of the pins are listed in Table 3-1. Additional descriptions of the device pins follows.

TABLE 3-1: PIN FUNCTION TABLE

MCP3004	MCP3008	Symbol	Description
PDIP, SOIC, TSSOP	PDIP, SOIC		
1	1	CH0	Analog Input
2	2	CH1	Analog Input
3	3	CH2	Analog Input
4	4	CH3	Analog Input
–	5	CH4	Analog Input
–	6	CH5	Analog Input
–	7	CH6	Analog Input
–	8	CH7	Analog Input
7	9	DGND	Digital Ground
8	10	$\overline{CS}$/SHDN	Chip Select/Shutdown Input
9	11	D_{IN}	Serial Data In
10	12	D_{OUT}	Serial Data Out
11	13	CLK	Serial Clock
12	14	AGND	Analog Ground
13	15	V_{REF}	Reference Voltage Input
14	16	V_{DD}	+2.7V to 5.5V Power Supply
5,6	–	NC	No Connection

3.1 Digital Ground (DGND)

Digital ground connection to internal digital circuitry.

3.2 Analog Ground (AGND)

Analog ground connection to internal analog circuitry.

3.3 Analog inputs (CH0 - CH7)

Analog inputs for channels 0 - 7, respectively, for the multiplexed inputs. Each pair of channels can be programmed to be used as two independent channels in single-ended mode or as a single pseudo-differential input where one channel is IN+ and one channel is IN. See **Section 4.1 "Analog Inputs"**, "Analog Inputs", and **Section 5.0 "Serial Communication"**, "Serial Communication", for information on programming the channel configuration.

3.4 Serial Clock (CLK)

The SPI clock pin is used to initiate a conversion and clock out each bit of the conversion as it takes place. See **Section 6.2 "Maintaining Minimum Clock Speed"**, "Maintaining Minimum Clock Speed", for constraints on clock speed.

3.5 Serial Data Input (D_{IN})

The SPI port serial data input pin is used to load channel configuration data into the device.

3.6 Serial Data Output (D_{OUT})

The SPI serial data output pin is used to shift out the results of the A/D conversion. Data will always change on the falling edge of each clock as the conversion takes place.

3.7 Chip Select/Shutdown ($\overline{CS}$/SHDN)

The $\overline{CS}$/SHDN pin is used to initiate communication with the device when pulled low. When pulled high, it will end a conversion and put the device in low-power standby. The $\overline{CS}$/SHDN pin must be pulled high between conversions.

NOTES:

© 2008 Microchip Technology Inc.

4.0 DEVICE OPERATION

The MCP3004/3008 A/D converters employ a conventional SAR architecture. With this architecture, a sample is acquired on an internal sample/hold capacitor for 1.5 clock cycles starting on the first rising edge of the serial clock once $\overline{CS}$ has been pulled low. Following this sample time, the device uses the collected charge on the internal sample and hold capacitor to produce a serial 10-bit digital output code. Conversion rates of 100 ksps are possible on the MCP3004/3008. See **Section 6.2 "Maintaining Minimum Clock Speed"**, "Maintaining Minimum Clock Speed", for information on minimum clock rates. Communication with the device is accomplished using a 4-wire SPI-compatible interface.

4.1 Analog Inputs

The MCP3004/3008 devices offer the choice of using the analog input channels configured as single-ended inputs or pseudo-differential pairs. The MCP3004 can be configured to provide two pseudo-differential input pairs or four single-ended inputs. The MCP3008 can be configured to provide four pseudo-differential input pairs or eight single-ended inputs. Configuration is done as part of the serial command before each conversion begins. When used in the pseudo-differential mode, each channel pair (i.e., CH0 and CH1, CH2 and CH3 etc.) are programmed as the IN+ and IN- inputs as part of the command string transmitted to the device. The IN+ input can range from IN- to (V_{REF} + IN-). The IN- input is limited to ±100 mV from the V_{SS} rail. The IN- input can be used to cancel small signal common-mode noise, which is present on both the IN+ and IN- inputs.

When operating in the pseudo-differential mode, if the voltage level of IN+ is equal to or less than IN-, the resultant code will be `000h`. If the voltage at IN+ is equal to or greater than {[V_{REF} + (IN-)] - 1 LSB}, then the output code will be `3FFh`. If the voltage level at IN- is more than 1 LSB below V_{SS}, the voltage level at the IN+ input will have to go below V_{SS} to see the `000h` output code. Conversely, if IN- is more than 1 LSB above V_{SS}, the `3FFh` code will not be seen unless the IN+ input level goes above V_{REF} level.

For the A/D converter to meet specification, the charge holding capacitor (C_{SAMPLE}) must be given enough time to acquire a 10-bit accurate voltage level during the 1.5 clock cycle sampling period. The analog input model is shown in Figure 4-1.

This diagram illustrates that the source impedance (R_S) adds to the internal sampling switch (R_{SS}) impedance, directly affecting the time that is required to charge the capacitor (C_{SAMPLE}). Consequently, larger source impedances increase the offset, gain and integral linearity errors of the conversion (see Figure 4-2).

4.2 Reference Input

For each device in the family, the reference input (V_{REF}) determines the analog input voltage range. As the reference input is reduced, the LSB size is reduced accordingly.

EQUATION 4-1: LSB SIZE CALCULATION

$$LSB\ Size = \frac{V_{REF}}{1024}$$

The theoretical digital output code produced by the A/D converter is a function of the analog input signal and the reference input, as shown below.

EQUATION 4-2: DIGITAL OUTPUT CODE CALCULATION

$$Digital\ Output\ Code = \frac{1024 \times V_{IN}}{V_{REF}}$$

Where:

V_{IN} = analog input voltage

V_{REF} = analog input voltage

When using an external voltage reference device, the system designer should always refer to the manufacturer's recommendations for circuit layout. Any instability in the operation of the reference device will have a direct effect on the operation of the A/D converter.

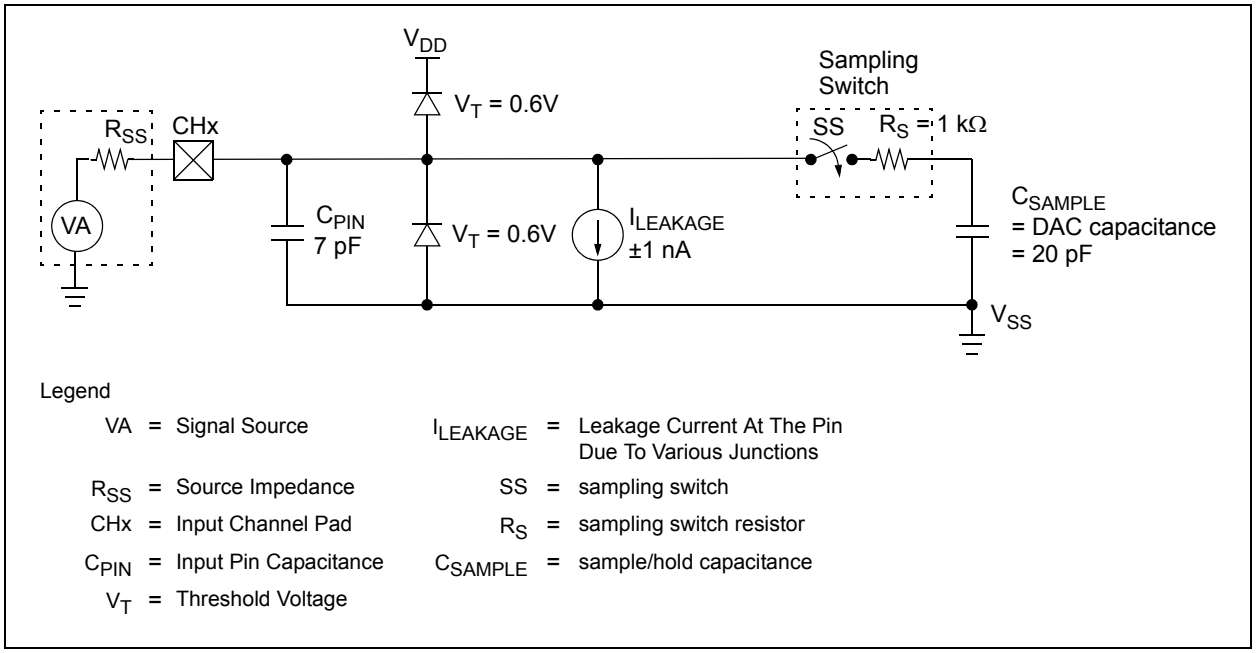

FIGURE 4-1: *Analog Input Model.*

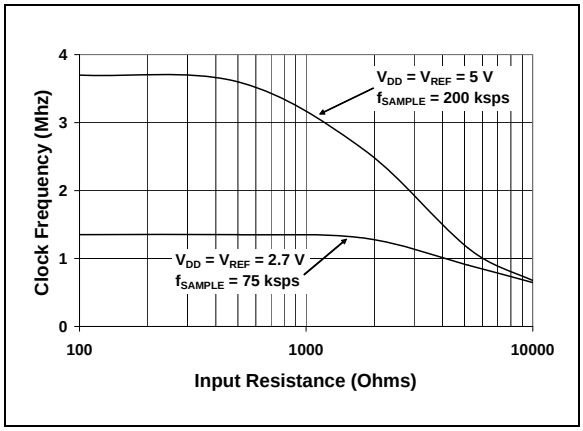

FIGURE 4-2: *Maximum Clock Frequency vs. Input resistance (R_S) to maintain less than a 0.1 LSB deviation in INL from nominal conditions.*

© 2008 Microchip Technology Inc.

5.0 SERIAL COMMUNICATION

Communication with the MCP3004/3008 devices is accomplished using a standard SPI-compatible serial interface. Initiating communication with either device is done by bringing the $\overline{CS}$ line low (see Figure 5-1). If the device was powered up with the $\overline{CS}$ pin low, it must be brought high and back low to initiate communication. The first clock received with $\overline{CS}$ low and D_{IN} high will constitute a start bit. The SGL/$\overline{DIFF}$ bit follows the start bit and will determine if the conversion will be done using single-ended or differential input mode. The next three bits (D0, D1 and D2) are used to select the input channel configuration. Table 5-1 and Table 5-2 show the configuration bits for the MCP3004 and MCP3008, respectively. The device will begin to sample the analog input on the fourth rising edge of the clock after the start bit has been received. The sample period will end on the falling edge of the fifth clock following the start bit.

Once the D0 bit is input, one more clock is required to complete the sample and hold period (D_{IN} is a "don't care" for this clock). On the falling edge of the next clock, the device will output a low null bit. The next 10 clocks will output the result of the conversion with MSB first, as shown in Figure 5-1. Data is always output from the device on the falling edge of the clock. If all 10 data bits have been transmitted and the device continues to receive clocks while the $\overline{CS}$ is held low, the device will output the conversion result LSB first, as is shown in Figure 5-2. If more clocks are provided to the device while $\overline{CS}$ is still low (after the LSB first data has been transmitted), the device will clock out zeros indefinitely.

If necessary, it is possible to bring $\overline{CS}$ low and clock in leading zeros on the D_{IN} line before the start bit. This is often done when dealing with microcontroller-based SPI ports that must send 8 bits at a time. Refer to **Section 6.1 "Using the MCP3004/3008 with Microcontroller (MCU) SPI Ports"**, "Using the MCP3004/3008 with Microcontroller (MCU) SPI Ports", for more details on using the MCP3004/3008 devices with hardware SPI ports.

TABLE 5-1: CONFIGURE BITS FOR THE MCP3004

Control Bit Selections				Input Configuration	Channel Selection
Single/ $\overline{Diff}$	D2*	D1	D0		
1	X	0	0	single-ended	CH0
1	X	0	1	single-ended	CH1
1	X	1	0	single-ended	CH2
1	X	1	1	single-ended	CH3
0	X	0	0	differential	CH0 = IN+ CH1 = IN-
0	X	0	1	differential	CH0 = IN- CH1 = IN+
0	X	1	0	differential	CH2 = IN+ CH3 = IN-
0	X	1	1	differential	CH2 = IN- CH3 = IN+

* D2 is "don't care" for MCP3004

TABLE 5-2: CONFIGURE BITS FOR THE MCP3008

Control Bit Selections				Input Configuration	Channel Selection
Single /$\overline{Diff}$	D2	D1	D0		
1	0	0	0	single-ended	CH0
1	0	0	1	single-ended	CH1
1	0	1	0	single-ended	CH2
1	0	1	1	single-ended	CH3
1	1	0	0	single-ended	CH4
1	1	0	1	single-ended	CH5
1	1	1	0	single-ended	CH6
1	1	1	1	single-ended	CH7
0	0	0	0	differential	CH0 = IN+ CH1 = IN-
0	0	0	1	differential	CH0 = IN- CH1 = IN+
0	0	1	0	differential	CH2 = IN+ CH3 = IN-
0	0	1	1	differential	CH2 = IN- CH3 = IN+
0	1	0	0	differential	CH4 = IN+ CH5 = IN-
0	1	0	1	differential	CH4 = IN- CH5 = IN+
0	1	1	0	differential	CH6 = IN+ CH7 = IN-
0	1	1	1	differential	CH6 = IN- CH7 = IN+

© 2008 Microchip Technology Inc.

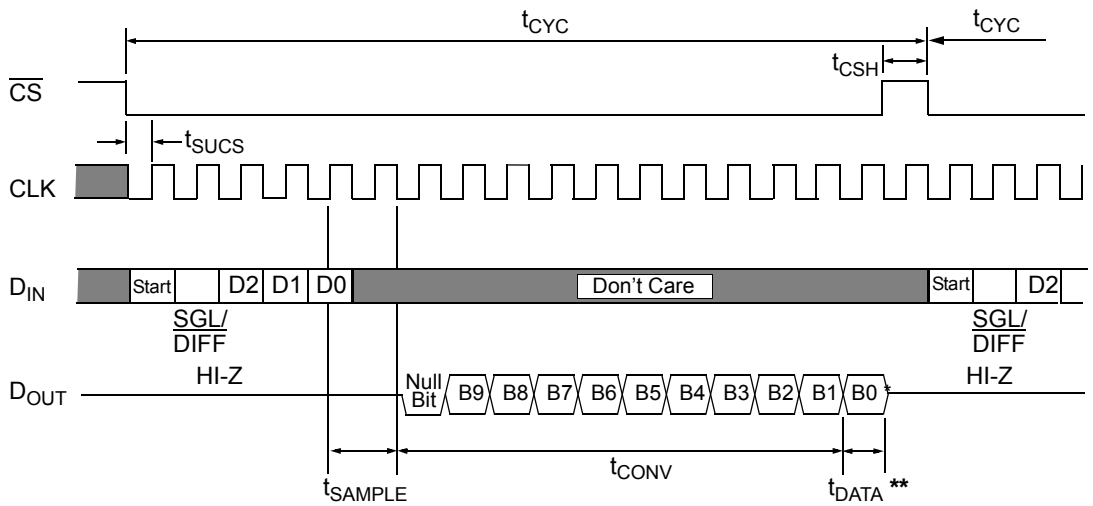

* After completing the data transfer, if further clocks are applied with $\overline{CS}$ low, the A/D converter will output LSB first data, then followed with zeros indefinitely. See Figure 5-2 below.

** t_{DATA}: during this time, the bias current and the comparator powers down while the reference input becomes a high-impedance node.

FIGURE 5-1: *Communication with the MCP3004 or MCP3008.*

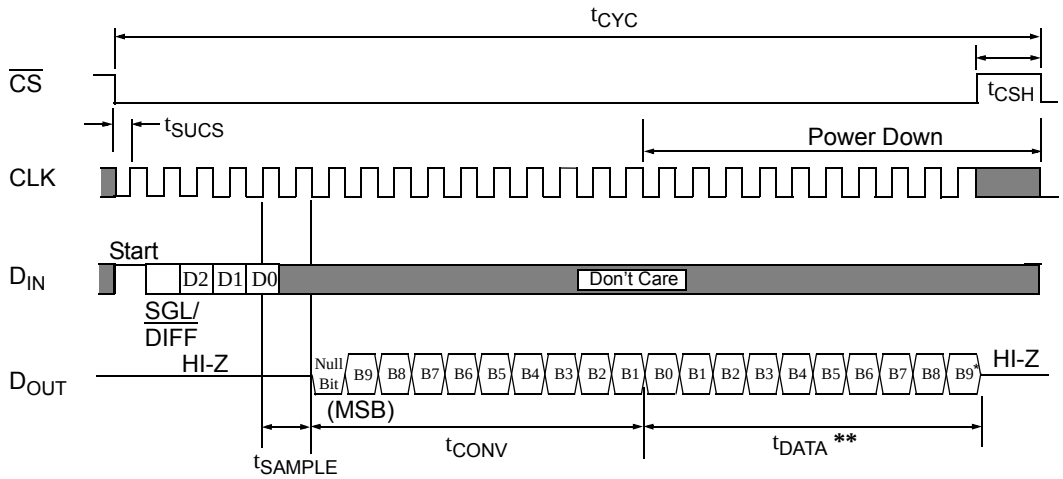

* After completing the data transfer, if further clocks are applied with $\overline{CS}$ low, the A/D converter will output zeros indefinitely.

** t_{DATA}: During this time, the bias circuit and the comparator powers down while the reference input becomes a high-impedance node, leaving the CLK running to clock out LSB first data or zeroes.

FIGURE 5-2: *Communication with MCP3004 or MCP3008 in LSB First Format.*

© 2008 Microchip Technology Inc.

6.0 APPLICATIONS INFORMATION

6.1 Using the MCP3004/3008 with Microcontroller (MCU) SPI Ports

With most microcontroller SPI ports, it is required to send groups of eight bits. It is also required that the microcontroller SPI port be configured to clock out data on the falling edge of clock and latch data in on the rising edge. Because communication with the MCP3004/3008 devices may not need multiples of eight clocks, it will be necessary to provide more clocks than are required. This is usually done by sending 'leading zeros' before the start bit. As an example, Figure 6-1 and Figure 6-2 shows how the MCP3004/3008 can be interfaced to a MCU with a hardware SPI port. Figure 6-1 depicts the operation shown in SPI Mode 0,0, which requires that the SCLK from the MCU idles in the 'low' state, while Figure 6-2 shows the similar case of SPI Mode 1,1, where the clock idles in the 'high' state.

As is shown in Figure 6-1, the first byte transmitted to the A/D converter contains seven leading zeros before the start bit. Arranging the leading zeros this way induces the 10 data bits to fall in positions easily manipulated by the MCU. The MSB is clocked out of the A/D converter on the falling edge of clock number 14. Once the second eight clocks have been sent to the device, the MCU receive buffer will contain five unknown bits (the output is at high-impedance for the first two clocks), the null bit and the highest order 2 bits of the conversion. Once the third byte has been sent to the device, the receive register will contain the lowest order eight bits of the conversion results. Employing this method ensures simpler manipulation of the converted data.

Figure 6-2 shows the same thing in SPI Mode 1,1, which requires that the clock idles in the high state. As with mode 0,0, the A/D converter outputs data on the falling edge of the clock and the MCU latches data from the A/D converter in on the rising edge of the clock.

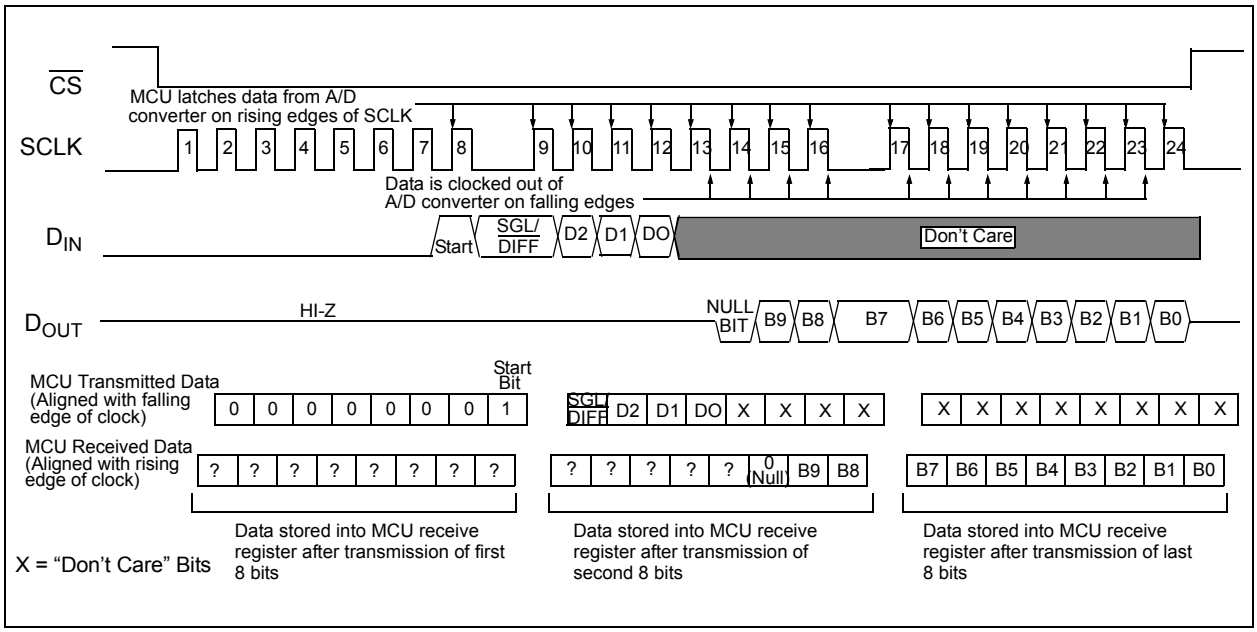

FIGURE 6-1: *SPI Communication with the MCP3004/3008 using 8-bit segments (Mode 0,0: SCLK idles low).*

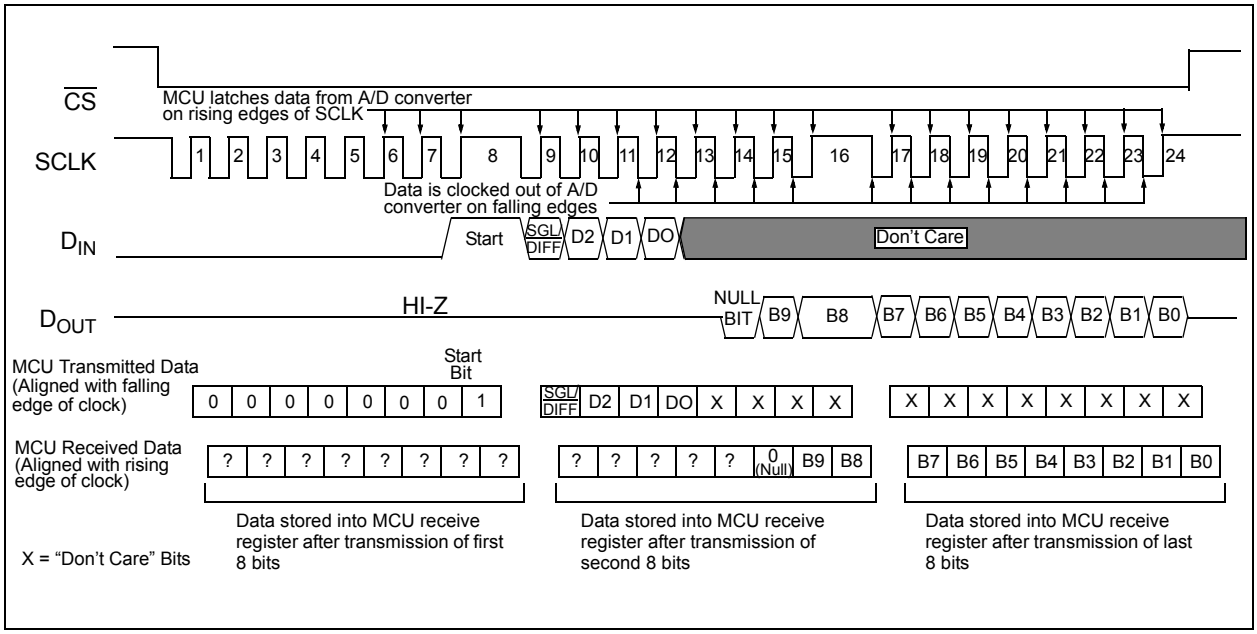

FIGURE 6-2: *SPI Communication with the MCP3004/3008 using 8-bit segments (Mode 1,1: SCLK idles high).*

6.2 Maintaining Minimum Clock Speed

When the MCP3004/3008 initiates the sample period, charge is stored on the sample capacitor. When the sample period is complete, the device converts one bit for each clock that is received. It is important for the user to note that a slow clock rate will allow charge to bleed off the sample capacitor while the conversion is taking place. At 85°C (worst case condition), the part will maintain proper charge on the sample capacitor for at least 1.2 ms after the sample period has ended. This means that the time between the end of the sample period and the time that all 10 data bits have been clocked out must not exceed 1.2 ms (effective clock frequency of 10 kHz). Failure to meet this criterion may introduce linearity errors into the conversion outside the rated specifications. It should be noted that during the entire conversion cycle, the A/D converter does not require a constant clock speed or duty cycle, as long as all timing specifications are met.

6.3 Buffering/Filtering the Analog Inputs

If the signal source for the A/D converter is not a low-impedance source, it will have to be buffered or inaccurate conversion results may occur (see Figure 4-2). It is also recommended that a filter be used to eliminate any signals that may be aliased back in to the conversion results, as is illustrated in Figure 6-3, where an op amp is used to drive, filter and gain the analog input of the MCP3004/3008. This amplifier provides a low-impedance source for the converter input, plus a low-pass filter, which eliminates unwanted high-frequency noise.

Low-pass (anti-aliasing) filters can be designed using Microchip's free interactive FilterLab® software. FilterLab will calculate capacitor and resistors values, as well as determine the number of poles that are required for the application. For more information on filtering signals, see AN699, *"Anti-Aliasing Analog Filters for Data Acquisition Systems"*.

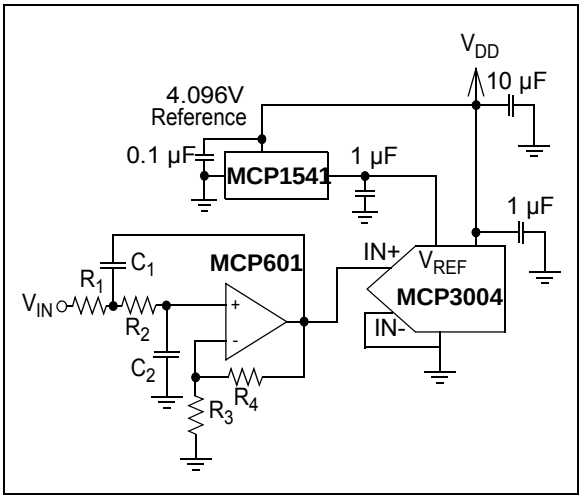

FIGURE 6-3: *The MCP601 Operational Amplifier is used to implement a second order anti-aliasing filter for the signal being converted by the MCP3004.*

© 2008 Microchip Technology Inc.

6.4 Layout Considerations

When laying out a printed circuit board for use with analog components, care should be taken to reduce noise wherever possible. A bypass capacitor should always be used with this device and should be placed as close as possible to the device pin. A bypass capacitor value of 1 µF is recommended.

Digital and analog traces should be separated as much as possible on the board, with no traces running underneath the device or bypass capacitor. Extra precautions should be taken to keep traces with high-frequency signals (such as clock lines) as far as possible from analog traces.

Use of an analog ground plane is recommended in order to keep the ground potential the same for all devices on the board. Providing V_{DD} connections to devices in a "star" configuration can also reduce noise by eliminating return current paths and associated errors (see Figure 6-4). For more information on layout tips when using A/D converters, refer to AN688, *"Layout Tips for 12-Bit A/D Converter Applications"*.

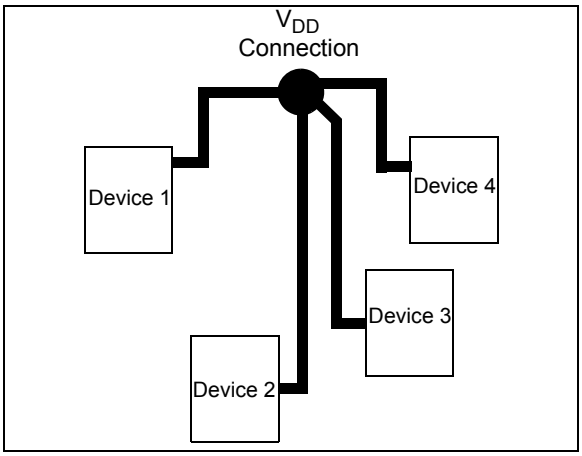

FIGURE 6-4: *V_{DD} traces arranged in a 'Star' configuration in order to reduce errors caused by current return paths.*

6.5 Utilizing the Digital and Analog Ground Pins

The MCP3004/3008 devices provide both digital and analog ground connections to provide additional means of noise reduction. As is shown in Figure 6-5, the analog and digital circuitry is separated internal to the device. This reduces noise from the digital portion of the device being coupled into the analog portion of the device. The two grounds are connected internally through the substrate which has a resistance of 5 -10Ω.

If no ground plane is utilized, both grounds must be connected to V_{SS} on the board. If a ground plane is available, both digital and analog ground pins should be connected to the analog ground plane. If both an analog and a digital ground plane are available, both the digital and the analog ground pins should be connected to the analog ground plane. Following these steps will reduce the amount of digital noise from the rest of the board being coupled into the A/D converter.

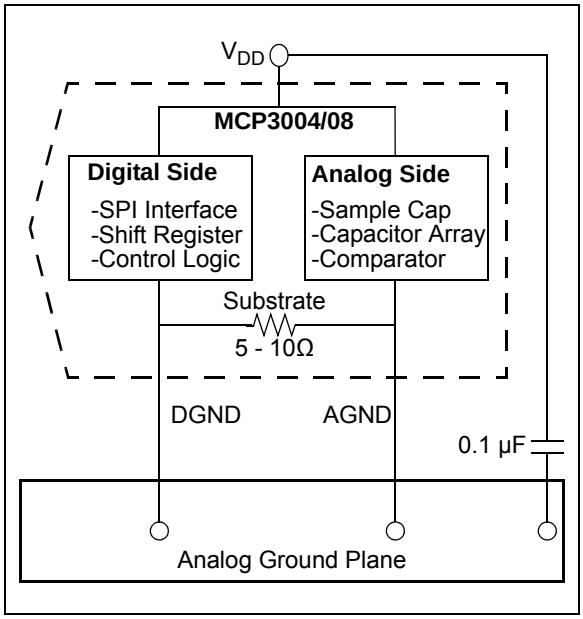

FIGURE 6-5: *Separation of Analog and Digital Ground Pins.*

NOTES:

© 2008 Microchip Technology Inc.

7.0 PACKAGING INFORMATION

7.1 Package Marking Information

14-Lead PDIP (300 mil)

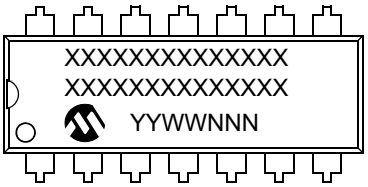

Example:

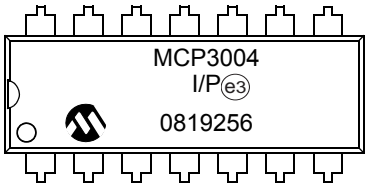

14-Lead SOIC (150 mil)

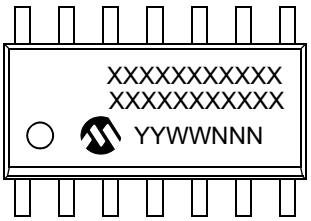

Example:

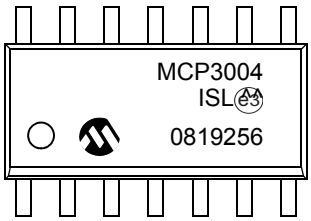

14-Lead TSSOP (4.4mm) *

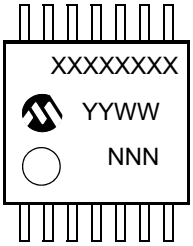

Example:

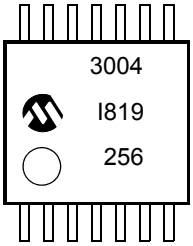

Legend:	XX...X	Customer-specific information
	Y	Year code (last digit of calendar year)
	YY	Year code (last 2 digits of calendar year)
	WW	Week code (week of January 1 is week ‘01’)
	NNN	Alphanumeric traceability code
	e3	Pb-free JEDEC designator for Matte Tin (Sn)
	*	This package is Pb-free. The Pb-free JEDEC designator (e3 can be found on the outer packaging for this package.

Note: In the event the full Microchip part number cannot be marked on one line, it will be carried over to the next line, thus limiting the number of available characters for customer-specific information.

Package Marking Information (Continued)

16-Lead PDIP (300 mil) (**MCP3008**)

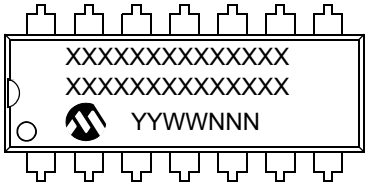

Example:

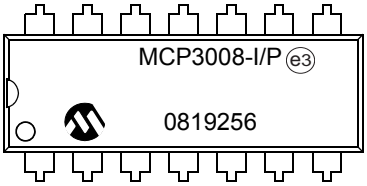

16-Lead SOIC (150 mil) (**MCP3008**)

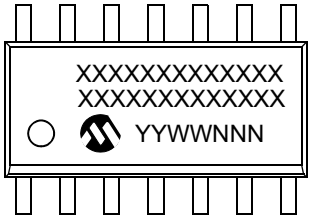

Example:

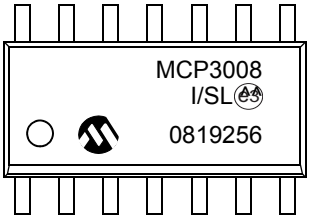

© 2008 Microchip Technology Inc.

14-Lead Plastic Dual In-Line (P) – 300 mil Body [PDIP]

Note: For the most current package drawings, please see the Microchip Packaging Specification located at http://www.microchip.com/packaging

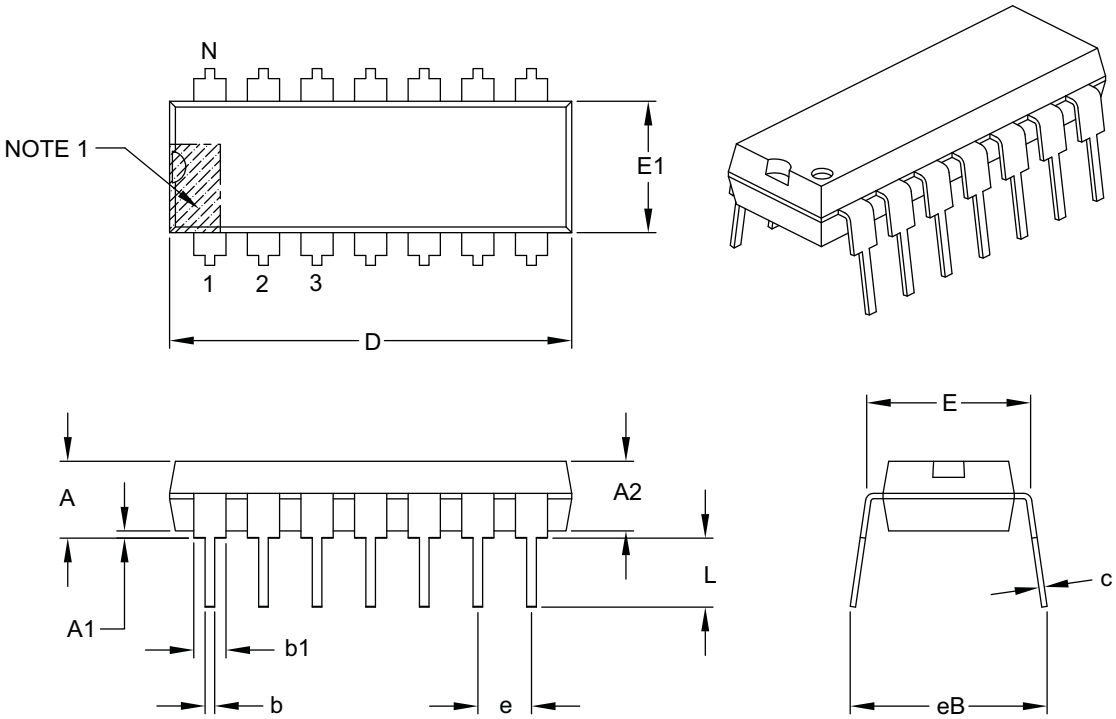

Units		INCHES		
Dimension Limits		MIN	NOM	MAX
Number of Pins	N	14		
Pitch	e	.100 BSC		
Top to Seating Plane	A	–	–	.210
Molded Package Thickness	A2	.115	.130	.195
Base to Seating Plane	A1	.015	–	–
Shoulder to Shoulder Width	E	.290	.310	.325
Molded Package Width	E1	.240	.250	.280
Overall Length	D	.735	.750	.775
Tip to Seating Plane	L	.115	.130	.150
Lead Thickness	c	.008	.010	.015
Upper Lead Width	b1	.045	.060	.070
Lower Lead Width	b	.014	.018	.022
Overall Row Spacing §	eB	–	–	.430

Notes:

1. Pin 1 visual index feature may vary, but must be located with the hatched area.
2. § Significant Characteristic.
3. Dimensions D and E1 do not include mold flash or protrusions. Mold flash or protrusions shall not exceed .010" per side.
4. Dimensioning and tolerancing per ASME Y14.5M.
   BSC: Basic Dimension. Theoretically exact value shown without tolerances.

Microchip Technology Drawing C04-005B

14-Lead Plastic Small Outline (SL) – Narrow, 3.90 mm Body [SOIC]

Note: For the most current package drawings, please see the Microchip Packaging Specification located at http://www.microchip.com/packaging

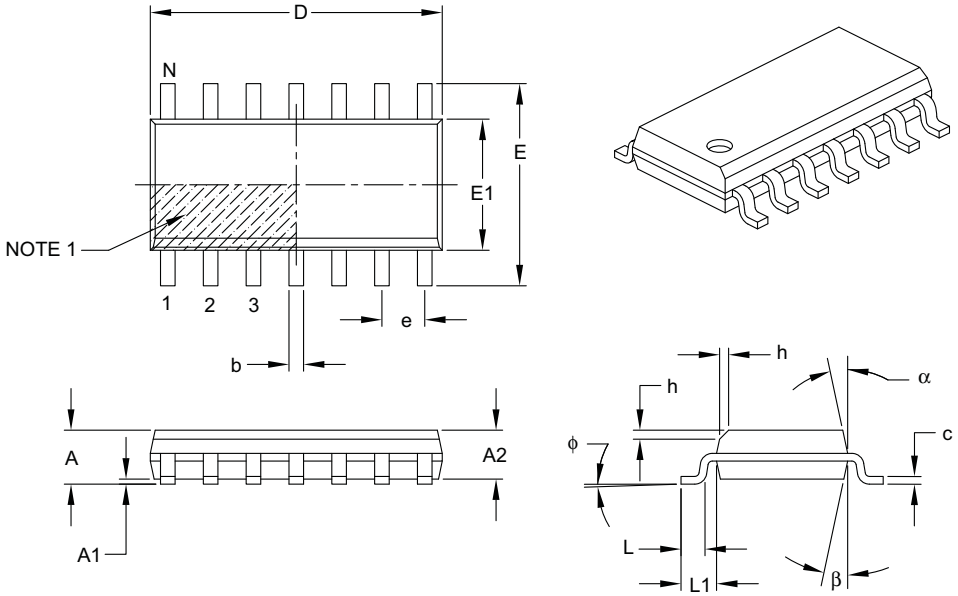

Units		MILLIMETERS		
Dimension Limits		MIN	NOM	MAX
Number of Pins	N	14		
Pitch	e	1.27 BSC		
Overall Height	A	–	–	1.75
Molded Package Thickness	A2	1.25	–	–
Standoff §	A1	0.10	–	0.25
Overall Width	E	6.00 BSC		
Molded Package Width	E1	3.90 BSC		
Overall Length	D	8.65 BSC		
Chamfer (optional)	h	0.25	–	0.50
Foot Length	L	0.40	–	1.27
Footprint	L1	1.04 REF		
Foot Angle	φ	0°	–	8°
Lead Thickness	c	0.17	–	0.25
Lead Width	b	0.31	–	0.51
Mold Draft Angle Top	α	5°	–	15°
Mold Draft Angle Bottom	β	5°	–	15°

Notes:

1. Pin 1 visual index feature may vary, but must be located within the hatched area.
2. § Significant Characteristic.
3. Dimensions D and E1 do not include mold flash or protrusions. Mold flash or protrusions shall not exceed 0.15 mm per side.
4. Dimensioning and tolerancing per ASME Y14.5M.

   BSC: Basic Dimension. Theoretically exact value shown without tolerances.

   REF: Reference Dimension, usually without tolerance, for information purposes only.

Microchip Technology Drawing C04-065B

© 2008 Microchip Technology Inc.

8-Lead Plastic Small Outline (SN) – Narrow, 3.90 mm Body [SOIC]

Note: For the most current package drawings, please see the Microchip Packaging Specification located at http://www.microchip.com/packaging

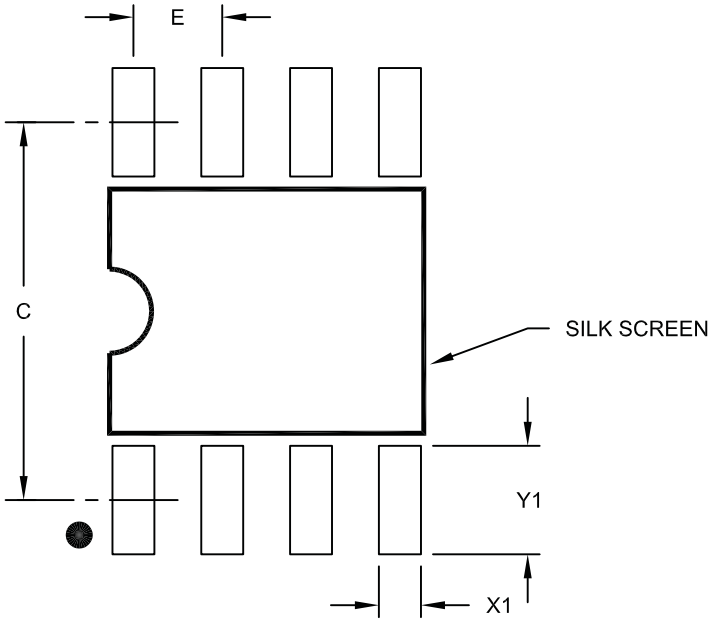

RECOMMENDED LAND PATTERN

Units		MILLIMETERS		
Dimension Limits		MIN	NOM	MAX
Contact Pitch	E		1.27 BSC	
Contact Pad Spacing	C		5.40	
Contact Pad Width (X8)	X1			0.60
Contact Pad Length (X8)	Y1			1.55

Notes:

1. Dimensioning and tolerancing per ASME Y14.5M
   BSC: Basic Dimension. Theoretically exact value shown without tolerances.

Microchip Technology Drawing No. C04-2057A

14-Lead Plastic Thin Shrink Small Outline (ST) – 4.4 mm Body [TSSOP]

Note: For the most current package drawings, please see the Microchip Packaging Specification located at http://www.microchip.com/packaging

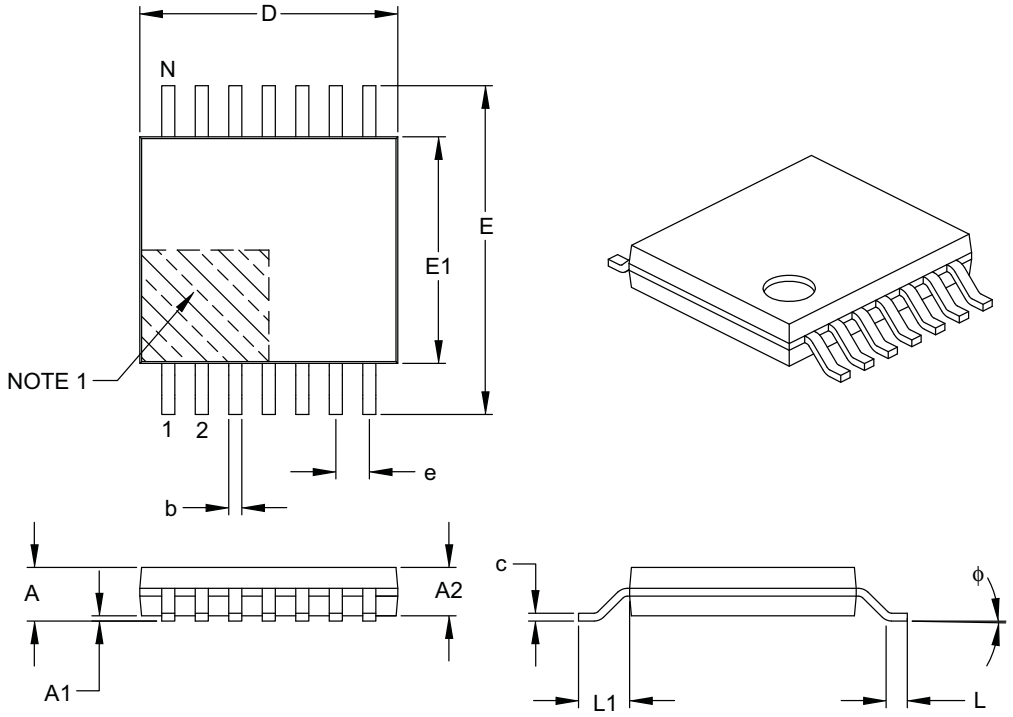

Units		MILLIMETERS		
Dimension Limits		MIN	NOM	MAX
Number of Pins	N	14		
Pitch	e	0.65 BSC		
Overall Height	A	–	–	1.20
Molded Package Thickness	A2	0.80	1.00	1.05
Standoff	A1	0.05	–	0.15
Overall Width	E	6.40 BSC		
Molded Package Width	E1	4.30	4.40	4.50
Molded Package Length	D	4.90	5.00	5.10
Foot Length	L	0.45	0.60	0.75
Footprint	L1	1.00 REF		
Foot Angle	ϕ	0°	–	8°
Lead Thickness	c	0.09	–	0.20
Lead Width	b	0.19	–	0.30

Notes:

1. Pin 1 visual index feature may vary, but must be located within the hatched area.
2. Dimensions D and E1 do not include mold flash or protrusions. Mold flash or protrusions shall not exceed 0.15 mm per side.
3. Dimensioning and tolerancing per ASME Y14.5M.

   BSC: Basic Dimension. Theoretically exact value shown without tolerances.
   REF: Reference Dimension, usually without tolerance, for information purposes only.

Microchip Technology Drawing C04-087B

© 2008 Microchip Technology Inc.

16-Lead Plastic Dual In-Line (P) – 300 mil Body [PDIP]

Note: For the most current package drawings, please see the Microchip Packaging Specification located at http://www.microchip.com/packaging

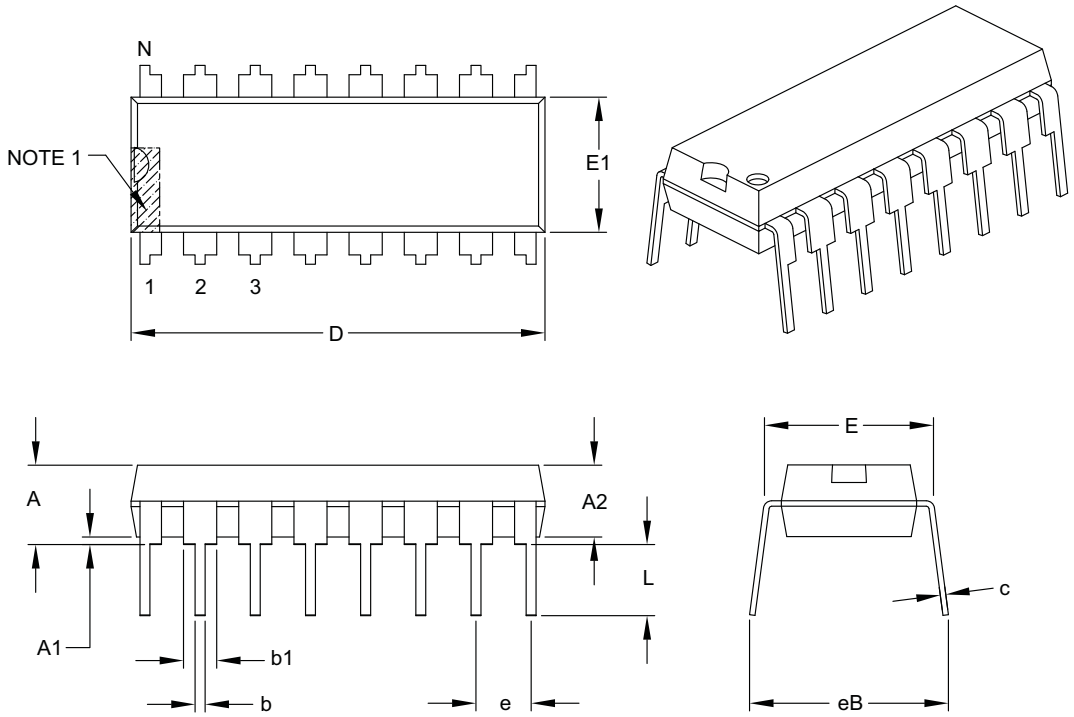

Units		INCHES		
Dimension Limits		MIN	NOM	MAX
Number of Pins	N	16		
Pitch	e	.100 BSC		
Top to Seating Plane	A	–	–	.210
Molded Package Thickness	A2	.115	.130	.195
Base to Seating Plane	A1	.015	–	–
Shoulder to Shoulder Width	E	.290	.310	.325
Molded Package Width	E1	.240	.250	.280
Overall Length	D	.735	.755	.775
Tip to Seating Plane	L	.115	.130	.150
Lead Thickness	c	.008	.010	.015
Upper Lead Width	b1	.045	.060	.070
Lower Lead Width	b	.014	.018	.022
Overall Row Spacing §	eB	–	–	.430

Notes:

1. Pin 1 visual index feature may vary, but must be located within the hatched area.
2. § Significant Characteristic.
3. Dimensions D and E1 do not include mold flash or protrusions. Mold flash or protrusions shall not exceed .010" per side.
4. Dimensioning and tolerancing per ASME Y14.5M.
   BSC: Basic Dimension. Theoretically exact value shown without tolerances.

Microchip Technology Drawing C04-017B

16-Lead Plastic Small Outline (SL) – Narrow, 3.90 mm Body [SOIC]

Note: For the most current package drawings, please see the Microchip Packaging Specification located at http://www.microchip.com/packaging

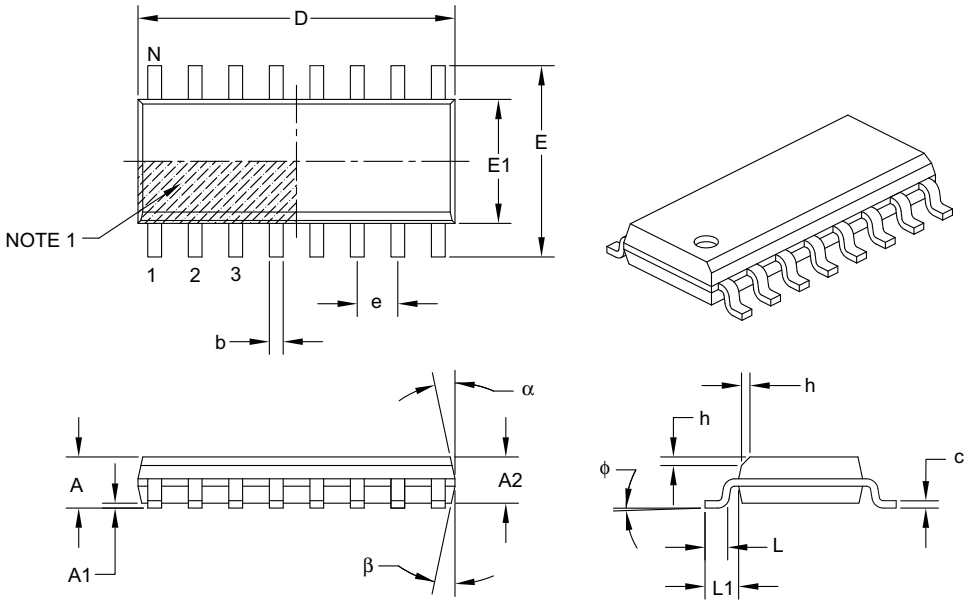

Units		MILLIMETERS		
Dimension Limits		MIN	NOM	MAX
Number of Pins	N	16		
Pitch	e	1.27 BSC		
Overall Height	A	–	–	1.75
Molded Package Thickness	A2	1.25	–	–
Standoff §	A1	0.10	–	0.25
Overall Width	E	6.00 BSC		
Molded Package Width	E1	3.90 BSC		
Overall Length	D	9.90 BSC		
Chamfer (optional)	h	0.25	–	0.50
Foot Length	L	0.40	–	1.27
Footprint	L1	1.04 REF		
Foot Angle	ϕ	0°	–	8°
Lead Thickness	c	0.17	–	0.25
Lead Width	b	0.31	–	0.51
Mold Draft Angle Top	α	5°	–	15°
Mold Draft Angle Bottom	β	5°	–	15°

Notes:

1. Pin 1 visual index feature may vary, but must be located within the hatched area.
2. § Significant Characteristic.
3. Dimensions D and E1 do not include mold flash or protrusions. Mold flash or protrusions shall not exceed 0.15 mm per side.
4. Dimensioning and tolerancing per ASME Y14.5M.

   BSC: Basic Dimension. Theoretically exact value shown without tolerances.

   REF: Reference Dimension, usually without tolerance, for information purposes only.

Microchip Technology Drawing C04-108B

© 2008 Microchip Technology Inc.

16-Lead Plastic Small Outline (SL) - Narrow, 3.90 mm Body [SOIC]

Note: For the most current package drawings, please see the Microchip Packaging Specification located at http://www.microchip.com/packaging

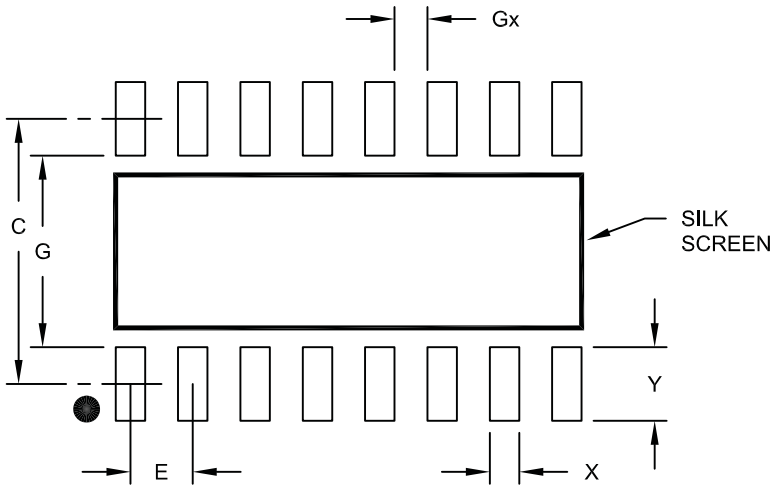

RECOMMENDED LAND PATTERN

Units		MILLIMETERS		
Dimension Limits		MIN	NOM	MAX
Contact Pitch	E		1.27 BSC	
Contact Pad Spacing	C		5.40	
Contact Pad Width	X			0.60
Contact Pad Length	Y			1.50
Distance Between Pads	Gx	0.67		
Distance Between Pads	G	3.90		

Notes:

1. Dimensioning and tolerancing per ASME Y14.5M
   BSC: Basic Dimension. Theoretically exact value shown without tolerances.

Microchip Technology Drawing No. C04-2108A

NOTES:

© 2008 Microchip Technology Inc.

APPENDIX A: REVISION HISTORY

Revision D (December 2008)

The following is the list of modifications:

1. Updates to **Section 7.0 "Packaging Information"**.

Revision C (January 2007)

The following is the list of modifications:

1. Updates to the packaging diagrams.

Revision B (May 2002)

The following is the list of modifications:

1. Undocumented changes.

Revision A (February 2000)

- Initial release of this document.

NOTES:

© 2008 Microchip Technology Inc.

PRODUCT IDENTIFICATION SYSTEM

To order or obtain information, e.g., on pricing or delivery, refer to the factory or the listed sales office.

PART NO.	X	/XX
Device	Temperature Range	Package

Device	MCP3004:	4-Channel 10-Bit Serial A/D Converter
	MCP3004T:	4-Channel 10-Bit Serial A/D Converter (Tape and Reel)
	MCP3008:	8-Channel 10-Bit Serial A/D Converter
	MCP3008T:	8-Channel 10-Bit Serial A/D Converter (Tape and Reel)
Temperature Range	I =	-40°C to +85°C (Industrial)
Package	P =	Plastic DIP (300 mil Body), 14-lead, 16-lead
	SL =	Plastic SOIC (150 mil Body), 14-lead, 16-lead
	ST =	Plastic TSSOP (4.4mm), 14-lead

Examples:

a) MCP3004-I/P: Industrial Temperature, PDIP package.

b) MCP3004-I/SL: Industrial Temperature, SOIC package.

c) MCP3004-I/ST: Industrial Temperature, TSSOP package.

d) MCP3004T-I/ST: Industrial Temperature, TSSOP package, Tape and Reel.

a) MCP3008-I/P: Industrial Temperature, PDIP package.

b) MCP3008-I/SL: Industrial Temperature, SOIC package.

NOTES:

© 2008 Microchip Technology Inc.

Note the following details of the code protection feature on Microchip devices:

- Microchip products meet the specification contained in their particular Microchip Data Sheet.
- Microchip believes that its family of products is one of the most secure families of its kind on the market today, when used in the intended manner and under normal conditions.
- There are dishonest and possibly illegal methods used to breach the code protection feature. All of these methods, to our knowledge, require using the Microchip products in a manner outside the operating specifications contained in Microchip's Data Sheets. Most likely, the person doing so is engaged in theft of intellectual property.
- Microchip is willing to work with the customer who is concerned about the integrity of their code.
- Neither Microchip nor any other semiconductor manufacturer can guarantee the security of their code. Code protection does not mean that we are guaranteeing the product as "unbreakable."

Code protection is constantly evolving. We at Microchip are committed to continuously improving the code protection features of our products. Attempts to break Microchip's code protection feature may be a violation of the Digital Millennium Copyright Act. If such acts allow unauthorized access to your software or other copyrighted work, you may have a right to sue for relief under that Act.

Information contained in this publication regarding device applications and the like is provided only for your convenience and may be superseded by updates. It is your responsibility to ensure that your application meets with your specifications. MICROCHIP MAKES NO REPRESENTATIONS OR WARRANTIES OF ANY KIND WHETHER EXPRESS OR IMPLIED, WRITTEN OR ORAL, STATUTORY OR OTHERWISE, RELATED TO THE INFORMATION, INCLUDING BUT NOT LIMITED TO ITS CONDITION, QUALITY, PERFORMANCE, MERCHANTABILITY OR FITNESS FOR PURPOSE**.** Microchip disclaims all liability arising from this information and its use. Use of Microchip devices in life support and/or safety applications is entirely at the buyer's risk, and the buyer agrees to defend, indemnify and hold harmless Microchip from any and all damages, claims, suits, or expenses resulting from such use. No licenses are conveyed, implicitly or otherwise, under any Microchip intellectual property rights.

Trademarks

The Microchip name and logo, the Microchip logo, Accuron, dsPIC, KEELOQ, KEELOQ logo, MPLAB, PIC, PICmicro, PICSTART, rfPIC, SmartShunt and UNI/O are registered trademarks of Microchip Technology Incorporated in the U.S.A. and other countries.

FilterLab, Linear Active Thermistor, MXDEV, MXLAB, SEEVAL, SmartSensor and The Embedded Control Solutions Company are registered trademarks of Microchip Technology Incorporated in the U.S.A.

Analog-for-the-Digital Age, Application Maestro, CodeGuard, dsPICDEM, dsPICDEM.net, dsPICworks, dsSPEAK, ECAN, ECONOMONITOR, FanSense, In-Circuit Serial Programming, ICSP, ICEPIC, Mindi, MiWi, MPASM, MPLAB Certified logo, MPLIB, MPLINK, mTouch, PICkit, PICDEM, PICDEM.net, PICtail, PIC^{32} logo, PowerCal, PowerInfo, PowerMate, PowerTool, REAL ICE, rfLAB, Select Mode, Total Endurance, WiperLock and ZENA are trademarks of Microchip Technology Incorporated in the U.S.A. and other countries.

SQTP is a service mark of Microchip Technology Incorporated in the U.S.A.

All other trademarks mentioned herein are property of their respective companies.

© 2008, Microchip Technology Incorporated, Printed in the U.S.A., All Rights Reserved.

Printed on recycled paper.

QUALITY MANAGEMENT SYSTEM
CERTIFIED BY DNV
ISO/TS 16949:2002

Microchip received ISO/TS-16949:2002 certification for its worldwide headquarters, design and wafer fabrication facilities in Chandler and Tempe, Arizona; Gresham, Oregon and design centers in California and India. The Company's quality system processes and procedures are for its PIC® MCUs and dsPIC® DSCs, KEELOQ® code hopping devices, Serial EEPROMs, microperipherals, nonvolatile memory and analog products. In addition, Microchip's quality system for the design and manufacture of development systems is ISO 9001:2000 certified.

WORLDWIDE SALES AND SERVICE

AMERICAS

Corporate Office
2355 West Chandler Blvd.
Chandler, AZ 85224-6199
Tel: 480-792-7200
Fax: 480-792-7277
Technical Support:
http://support.microchip.com
Web Address:
www.microchip.com

Atlanta
Duluth, GA
Tel: 678-957-9614
Fax: 678-957-1455

Boston
Westborough, MA
Tel: 774-760-0087
Fax: 774-760-0088

Chicago
Itasca, IL
Tel: 630-285-0071
Fax: 630-285-0075

Dallas
Addison, TX
Tel: 972-818-7423
Fax: 972-818-2924

Detroit
Farmington Hills, MI
Tel: 248-538-2250
Fax: 248-538-2260

Kokomo
Kokomo, IN
Tel: 765-864-8360
Fax: 765-864-8387

Los Angeles
Mission Viejo, CA
Tel: 949-462-9523
Fax: 949-462-9608

Santa Clara
Santa Clara, CA
Tel: 408-961-6444
Fax: 408-961-6445

Toronto
Mississauga, Ontario,
Canada
Tel: 905-673-0699
Fax: 905-673-6509

ASIA/PACIFIC

Asia Pacific Office
Suites 3707-14, 37th Floor
Tower 6, The Gateway
Harbour City, Kowloon
Hong Kong
Tel: 852-2401-1200
Fax: 852-2401-3431

Australia - Sydney
Tel: 61-2-9868-6733
Fax: 61-2-9868-6755

China - Beijing
Tel: 86-10-8528-2100
Fax: 86-10-8528-2104

China - Chengdu
Tel: 86-28-8665-5511
Fax: 86-28-8665-7889

China - Hong Kong SAR
Tel: 852-2401-1200
Fax: 852-2401-3431

China - Nanjing
Tel: 86-25-8473-2460
Fax: 86-25-8473-2470

China - Qingdao
Tel: 86-532-8502-7355
Fax: 86-532-8502-7205

China - Shanghai
Tel: 86-21-5407-5533
Fax: 86-21-5407-5066

China - Shenyang
Tel: 86-24-2334-2829
Fax: 86-24-2334-2393

China - Shenzhen
Tel: 86-755-8203-2660
Fax: 86-755-8203-1760

China - Wuhan
Tel: 86-27-5980-5300
Fax: 86-27-5980-5118

China - Xiamen
Tel: 86-592-2388138
Fax: 86-592-2388130

China - Xian
Tel: 86-29-8833-7252
Fax: 86-29-8833-7256

China - Zhuhai
Tel: 86-756-3210040
Fax: 86-756-3210049

ASIA/PACIFIC

India - Bangalore
Tel: 91-80-4182-8400
Fax: 91-80-4182-8422

India - New Delhi
Tel: 91-11-4160-8631
Fax: 91-11-4160-8632

India - Pune
Tel: 91-20-2566-1512
Fax: 91-20-2566-1513

Japan - Yokohama
Tel: 81-45-471- 6166
Fax: 81-45-471-6122

Korea - Daegu
Tel: 82-53-744-4301
Fax: 82-53-744-4302

Korea - Seoul
Tel: 82-2-554-7200
Fax: 82-2-558-5932 or
82-2-558-5934

Malaysia - Kuala Lumpur
Tel: 60-3-6201-9857
Fax: 60-3-6201-9859

Malaysia - Penang
Tel: 60-4-227-8870
Fax: 60-4-227-4068

Philippines - Manila
Tel: 63-2-634-9065
Fax: 63-2-634-9069

Singapore
Tel: 65-6334-8870
Fax: 65-6334-8850

Taiwan - Hsin Chu
Tel: 886-3-572-9526
Fax: 886-3-572-6459

Taiwan - Kaohsiung
Tel: 886-7-536-4818
Fax: 886-7-536-4803

Taiwan - Taipei
Tel: 886-2-2500-6610
Fax: 886-2-2508-0102

Thailand - Bangkok
Tel: 66-2-694-1351
Fax: 66-2-694-1350

EUROPE

Austria - Wels
Tel: 43-7242-2244-39
Fax: 43-7242-2244-393

Denmark - Copenhagen
Tel: 45-4450-2828
Fax: 45-4485-2829

France - Paris
Tel: 33-1-69-53-63-20
Fax: 33-1-69-30-90-79

Germany - Munich
Tel: 49-89-627-144-0
Fax: 49-89-627-144-44

Italy - Milan
Tel: 39-0331-742611
Fax: 39-0331-466781

Netherlands - Drunen
Tel: 31-416-690399
Fax: 31-416-690340

Spain - Madrid
Tel: 34-91-708-08-90
Fax: 34-91-708-08-91

UK - Wokingham
Tel: 44-118-921-5869
Fax: 44-118-921-5820

01/02/08

© 2008 Microchip Technology Inc.

Мы молодая и активно развивающаяся компания в области поставок электронных компонентов. Мы поставляем электронные компоненты отечественного и импортного производства напрямую от производителей и с крупнейших складов мира.

Благодаря сотрудничеству с мировыми поставщиками мы осуществляем комплексные и плановые поставки широчайшего спектра электронных компонентов.

Собственная эффективная логистика и склад в обеспечивает надежную поставку продукции в точно указанные сроки по всей России.

Мы осуществляем техническую поддержку нашим клиентам и предпродажную проверку качества продукции. На все поставляемые продукты мы предоставляем гарантию .

Осуществляем поставки продукции под контролем ВП МО РФ на предприятия военно-промышленного комплекса России , а также работаем в рамках 275 ФЗ с открытием отдельных счетов в уполномоченном банке. Система менеджмента качества компании соответствует требованиям ГОСТ ISO 9001.

Минимальные сроки поставки, гибкие цены, неограниченный ассортимент и индивидуальный подход к клиентам являются основой для выстраивания долгосрочного и эффективного сотрудничества с предприятиями радиоэлектронной промышленности, предприятиями ВПК и научно-исследовательскими институтами России.

С нами вы становитесь еще успешнее!

Наши контакты:

Телефон: +7 812 627 14 35

Электронная почта: sales@st-electron.ru

Адрес: 198099, Санкт-Петербург, Промышленная ул, дом № 19, литера Н, помещение 100-Н Офис 331