MC14060B

14-Bit Binary Counter and Oscillator

The MC14060B is a 14−stage binary ripple counter with an on−chip oscillator buffer. The oscillator configuration allows design of either RC or crystal oscillator circuits. Also included on the chip is a reset function which places all outputs into the zero state and disables the oscillator. A negative transition on Clock will advance the counter to the next state. Schmitt trigger action on the input line permits very slow input rise and fall times. Applications include time delay circuits, counter controls, and frequency dividing circuits.

This device contains protection circuitry to guard against damage due to high static voltages or electric fields. However, precautions must be taken to avoid applications of any voltage higher than maximum rated voltages to this high−impedance circuit. For proper operation, V_{in} and V_{out} should be constrained to the range $V_{SS} \leq (V_{in}$ or $V_{out}) \leq V_{DD}$.

Unused inputs must always be tied to an appropriate logic voltage level (e.g., either V_{SS} or V_{DD}). Unused outputs must be left open.

Features

- Fully Static Operation
- Diode Protection on All Inputs
- Supply Voltage Range = 3.0 V to 18 V
- Capable of Driving Two Low−power TTL Loads or One Low−power Schottky TTL Load Over the Rated Temperature Range
- Buffered Outputs Available from Stages 4 Through 10 and 12 Through 14
- Common Reset Line
- Pin−for−Pin Replacement for CD4060B
- These Devices are Pb−Free and are RoHS Compliant

MAXIMUM RATINGS (Voltages Referenced to V_{SS})

Symbol	Parameter	Value	Unit
V_{DD}	DC Supply Voltage Range	−0.5 to +18.0	V
V_{in}, V_{out}	Input or Output Voltage Range (DC or Transient)	−0.5 to V_{DD} +0.5	V
I_{in}, I_{out}	Input or Output Current (DC or Transient) per Pin	±10	mA
P_D	Power Dissipation, per Package (Note 1)	500	mW
T_A	Ambient Temperature Range	−55 to +125	°C
T_{stg}	Storage Temperature Range	−65 to +150	°C
T_L	Lead Temperature (8 Second Soldering)	260	°C

Maximum ratings are those values beyond which device damage can occur. Maximum ratings applied to the device are individual stress limit values (not normal operating conditions) and are not valid simultaneously. If these limits are exceeded, device functional operation is not implied, damage may occur and reliability may be affected.

1. Temperature Derating: Plastic “P and D/DW” Packages: −7.0 mW/°C from 65°C To 125°C.

ON Semiconductor®

http://onsemi.com

MARKING DIAGRAMS

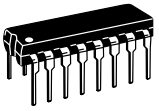

PDIP−16
P SUFFIX
CASE 648

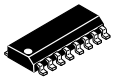

SOIC−16
D SUFFIX
CASE 751B

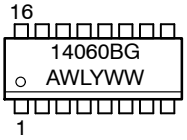

TSSOP−16
DT SUFFIX
CASE 948F

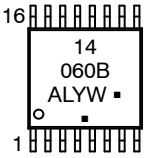

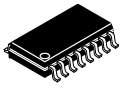

SOEIAJ−16
F SUFFIX
CASE 966

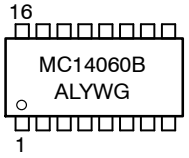

A	= Assembly Location
WL, L	= Wafer Lot
YY, Y	= Year
WW, W	= Work Week
G or ▪	= Pb−Free Package

(Note: Microdot may be in either location)

ORDERING INFORMATION

See detailed ordering and shipping information in the package dimensions section on page 2 of this data sheet.

© Semiconductor Components Industries, LLC, 2011

June, 2011 − Rev. 8

Publication Order Number:
MC14060B/D

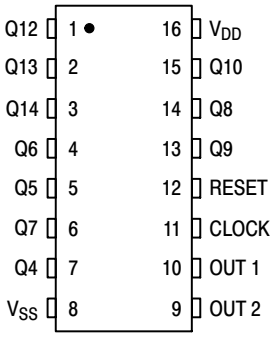

Figure 1. Pin Assignment

Table 1. Truth Table

Clock	Reset	Output State
↗	L	No Change
↘	L	Advance to Next State
H	H	All Outputs are Low

X = Don't Care

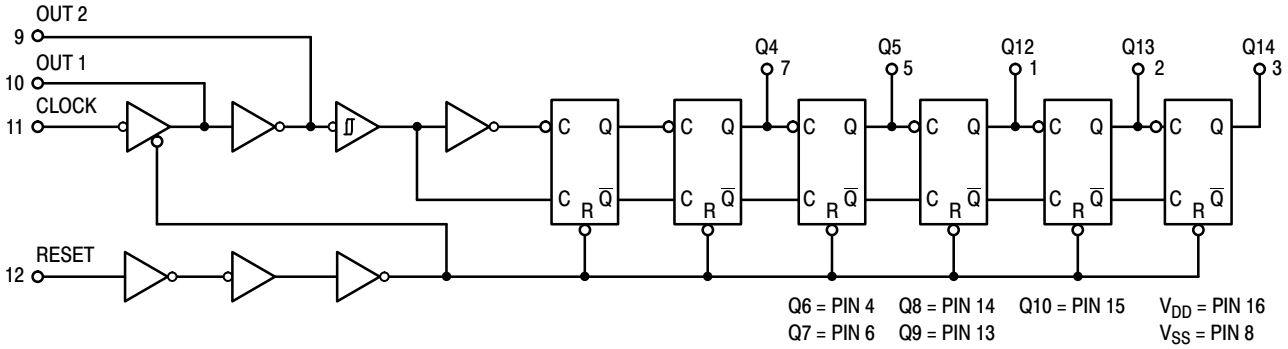

Figure 2. Logic Diagram

ORDERING INFORMATION

Device	Package	Shipping†
MC14060BCPG	PDIP−16 (Pb−Free)	500 Units / Rail
MC14060BDG	SOIC−16 (Pb−Free)	48 Units / Rail
MC14060BDR2G	SOIC−16 (Pb−Free)	2500 / Tape & Reel
MC14060BDTR2G	TSSOP−16*	2500 / Tape & Reel
MC14060BFELG	SOEIAJ−16 (Pb−Free)	2000 / Tape & Reel

†For information on tape and reel specifications, including part orientation and tape sizes, please refer to our Tape and Reel Packaging Specifications Brochure, BRD8011/D.
*This package is inherently Pb−Free.

ELECTRICAL CHARACTERISTICS (Voltages Referenced to V_{SS})

Symbol	Characteristic	V_{DD} Vdc	– 55°C Min	– 55°C Max	25°C Min	25°C Typ (Note 2)	25°C Max	125°C Min	125°C Max	Unit
V_{OL}	Output Voltage "0" Level V_{in} = V_{DD} or 0	5.0 10 15	– – –	0.05 0.05 0.05	– – –	0 0 0	0.05 0.05 0.05	– – –	0.05 0.05 0.05	V
V_{OH}	V_{in} = 0 or V_{DD} "1" Level	5.0 10 15	4.95 9.95 14.95	– – –	4.95 9.95 14.95	5.0 10 15	– – –	4.95 9.95 14.95	– – –	V
V_{IL}	Input Voltage "0" Level (V_O = 4.5 or 0.5 V) (V_O = 9.0 or 1.0 V) (V_O = 13.5 or 1.5 V)	 5.0 10 15	 – – –	 1.5 3.0 4.0	 – – –	 2.25 4.50 6.75	 1.5 3.0 4.0	 – – –	 1.5 3.0 4.0	V
V_{IH}	(V_O = 0.5 or 4.5 V) "1" Level (V_O = 1.0 or 9.0 V) (V_O = 1.5 or 13.5 V)	5.0 10 15	3.5 7.0 11.0	– – –	3.5 7.0 11.0	2.75 5.50 8.25	– – –	3.5 7.0 11.0	– – –	V
V_{IL}	Input Voltage "0" Level (V_O = 4.5 Vdc) (For Input 11 (V_O = 9.0 Vdc) and Output 10) (V_O = 13.5 Vdc)	 5.0 10 15	 – – –	 1.0 2.0 2.5	 – – –	 2.25 4.50 6.75	 1.0 2.0 2.5	 – – –	 1.0 2.0 2.5	Vdc
V_{IH}	(V_O = 0.5 Vdc) "1" Level (V_O = 1.0 Vdc) (V_O = 1.5 Vdc)	5.0 10 15	4.0 8.0 12.5	– – –	4.0 8.0 12.5	2.75 5.50 8.25	– – –	4.0 8.0 12.5	– – –	Vdc
I_{OH}	Output Drive Current (V_{OH} = 2.5 V) (Except Source (V_{OH} = 4.6 V) Pins 9 and 10) (V_{OH} = 9.5 V) (V_{OH} = 13.5 V)	 5.0 5.0 10 15	 –3.0 –0.64 –1.6 – 4.2	 – – – –	 –2.4 –0.51 –1.3 –3.4	 –4.2 –0.88 –2.25 –8.8	 – – – –	 – 1.7 – 0.36 – 0.9 – 2.4	 – – – –	mA
I_{OL}	(V_{OL} = 0.4 V) Sink (V_{OL} = 0.5 V) (V_{OL} = 1.5 V)	5.0 10 15	0.64 1.6 4.2	– – –	0.51 1.3 3.4	0.88 2.25 8.8	– – –	0.36 0.9 2.4	– – –	mA
I_{in}	Input Current	15	–	± 0.1	–	±0.00001	± 0.1	–	± 1.0	μA
C_{in}	Input Capacitance (V_{in} = 0)	–	–	–	–	5.0	7.5	–	–	pF
I_{DD}	Quiescent Current (Per Package)	5.0 10 15	– – –	5.0 10 20	– – –	0.005 0.010 0.015	5.0 10 20	– – –	150 300 600	μA
I_T	Total Supply Current (Notes 3, 4) (Dynamic plus Quiescent, Per Package) (C_L = 50 pF on all outputs, all buffers switching)	5.0 10 15	I_T = (0.25 μA/kHz) f + I_{DD} I_T = (0.54 μA/kHz) f + I_{DD} I_T = (0.85 μA/kHz) f + I_{DD}							μA

2. Data labelled "Typ" is not to be used for design purposes but is intended as an indication of the IC's potential performance.
3. The formulas given are for the typical characteristics only at 25°C.
4. To calculate total supply current at loads other than 50 pF: $I_T(C_L) = I_T(50\ pF) + (C_L - 50)\ Vfk$
   where: I_T is in μA (per package), C_L in pF, V = (V_{DD} – V_{SS}) in volts, f in kHz is input frequency, and k = 0.002.

SWITCHING CHARACTERISTICS (C_L = 50 pF, T_A = 25°C)

Symbol	Characteristic	V_{DD} Vdc	Min	Typ (Note 5)	Max	Unit
t_{TLH}	Output Rise Time (Counter Outputs)	5.0 10 15	– – –	40 25 20	200 100 80	ns
t_{THL}	Output Fall Time (Counter Outputs)	5.0 10 15	– – –	50 30 20	200 100 80	ns
t_{PLH} t_{PHL}	Propagation Delay Time Clock to Q4	5.0 10 15	– – –	415 175 125	740 300 200	ns
	Clock to Q14	5.0 10 15	– – –	1.5 0.7 0.4	2.7 1.3 1.0	μs
t_{wH}	Clock Pulse Width	5.0 10 15	100 40 30	65 30 20	– – –	ns
f_{ϕ}	Clock Pulse Frequency	5.0 10 15	– – –	5 14 17	3.5 8 12	MHz
t_{TLH} t_{THL}	Clock Rise and Fall Time	5.0 10 15	No Limit			ns
t_w	Reset Pulse Width	5.0 10 15	120 60 40	40 15 10	– – –	ns
t_{PHL}	Propagation Delay Time Reset to On	5.0 10 15	– – –	170 80 60	350 160 100	ns

5. Data labelled “Typ” is not to be used for design purposes but is intended as an indication of the IC’s potential performance.

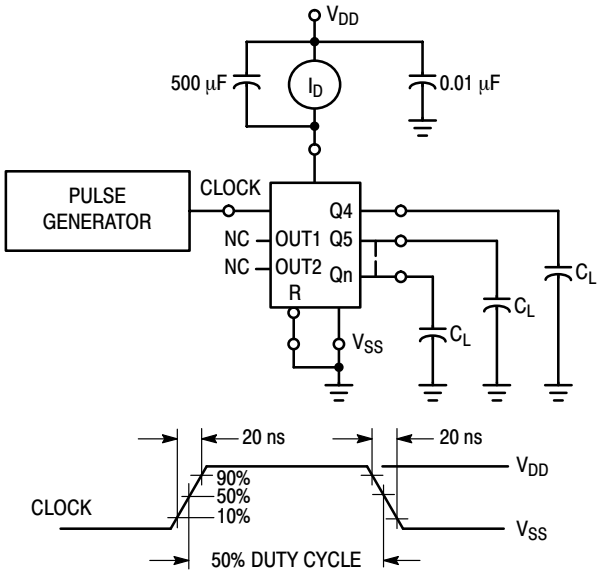

Figure 1. Power Dissipation Test Circuit and Waveform

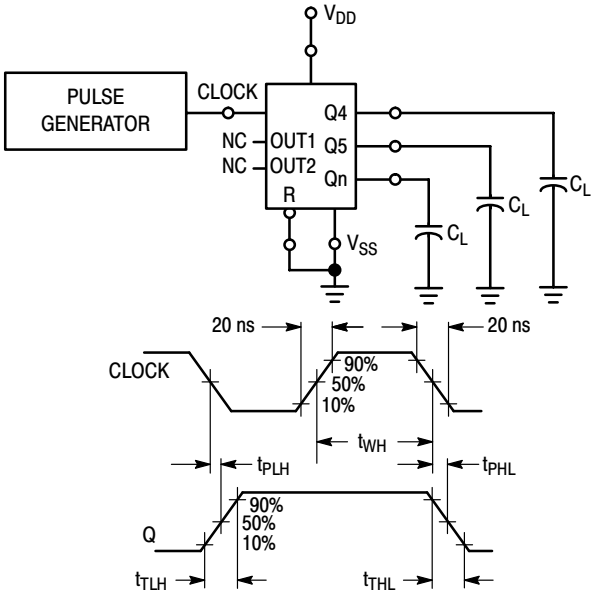

Figure 2. Switching Time Test Circuit and Waveforms

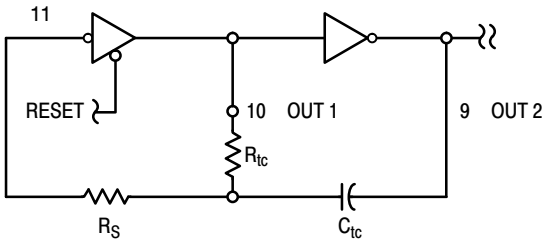

$$f \approx \frac{1}{2.3 R_{tc} C_{tc}}$$

if 1 kHz ≤ f ≤ 100 kHz
and $2R_{tc} < R_S < 10R_{tc}$
(f in Hz, R in ohms, C in farads)

The formula may vary for other frequencies. Recommended maximum value for the resistors in 1 MΩ.

Figure 3. Oscillator Circuit Using RC Configuration

TYPICAL RC OSCILLATOR CHARACTERISTICS

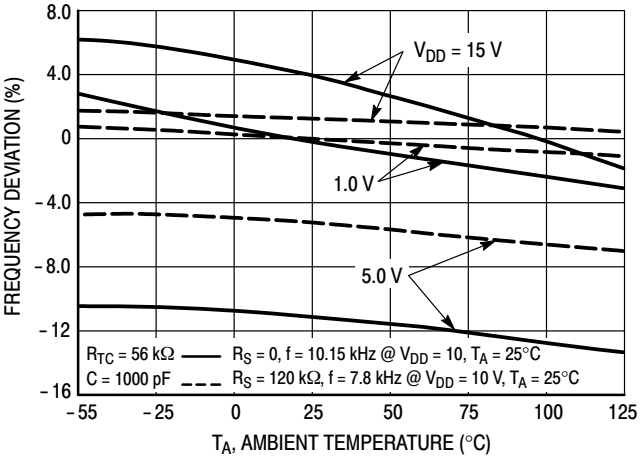

Figure 4. RC Oscillator Stability

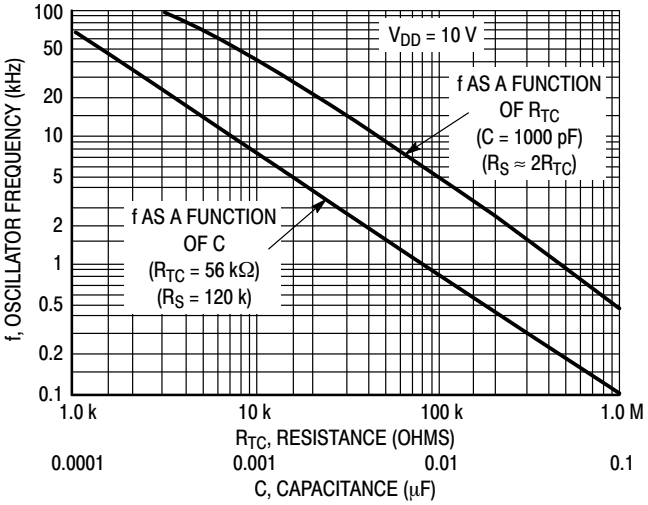

Figure 5. RC Oscillator Frequency as a Function of R_{TC} and C

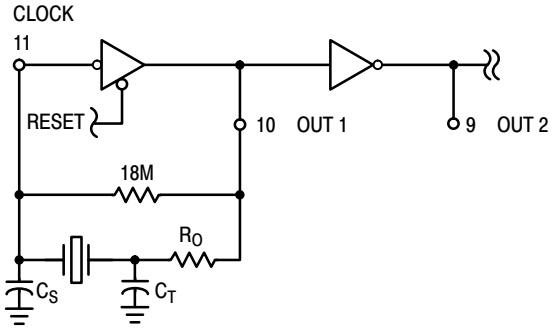

Figure 6. Typical Crystal Oscillator Circuit

Table 2. Typical Data for Crystal Oscillator Circuit

Characteristic	500 kHz Circuit	32 kHz Circuit	Unit
Crystal Characteristics			
Resonant Frequency	500	32	kHz
Equivalent Resistance, R_S	1.0	6.2	kΩ
External Resistor/Capacitor Values			
R_O	47	750	kΩ
C_T	82	82	pF
C_S	20	20	pF
Frequency Stability			
Frequency Changes as a Function of V_{DD} (T_A = 25°C)			
V_{DD} Change from 5.0 V to 10 V	+6.0	+2.0	ppm
V_{DD} Change from 10 V to 15 V	+2.0	+2.0	ppm
Frequency Change as a Function of Temperature (V_{DD} = 10 V)			
T_A Change from − 55°C to + 25°C Complete Oscillator (Note 6)	+100	+120	ppm
T_A Change from + 25°C to + 125°C Complete Oscillator (Note 6)	−160	−560	ppm

6. Complete oscillator includes crystal, capacitors, and resistors.

PACKAGE DIMENSIONS

PDIP−16
P SUFFIX
PLASTIC DIP PACKAGE
CASE 648−08
ISSUE T

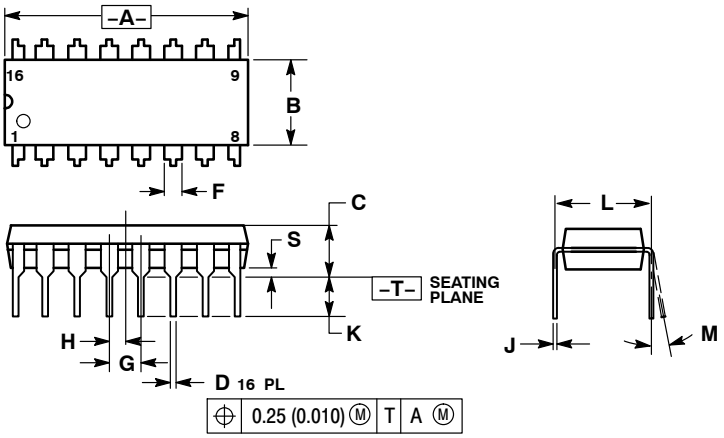

NOTES:
1. DIMENSIONING AND TOLERANCING PER ANSI Y14.5M, 1982.
2. CONTROLLING DIMENSION: INCH.
3. DIMENSION L TO CENTER OF LEADS WHEN FORMED PARALLEL.
4. DIMENSION B DOES NOT INCLUDE MOLD FLASH.
5. ROUNDED CORNERS OPTIONAL.

	INCHES		MILLIMETERS	
DIM	MIN	MAX	MIN	MAX
A	0.740	0.770	18.80	19.55
B	0.250	0.270	6.35	6.85
C	0.145	0.175	3.69	4.44
D	0.015	0.021	0.39	0.53
F	0.040	0.70	1.02	1.77
G	0.100 BSC		2.54 BSC	
H	0.050 BSC		1.27 BSC	
J	0.008	0.015	0.21	0.38
K	0.110	0.130	2.80	3.30
L	0.295	0.305	7.50	7.74
M	0°	10°	0°	10°
S	0.020	0.040	0.51	1.01

PACKAGE DIMENSIONS

SOIC−16
D SUFFIX
PLASTIC SOIC PACKAGE
CASE 751B−05
ISSUE K

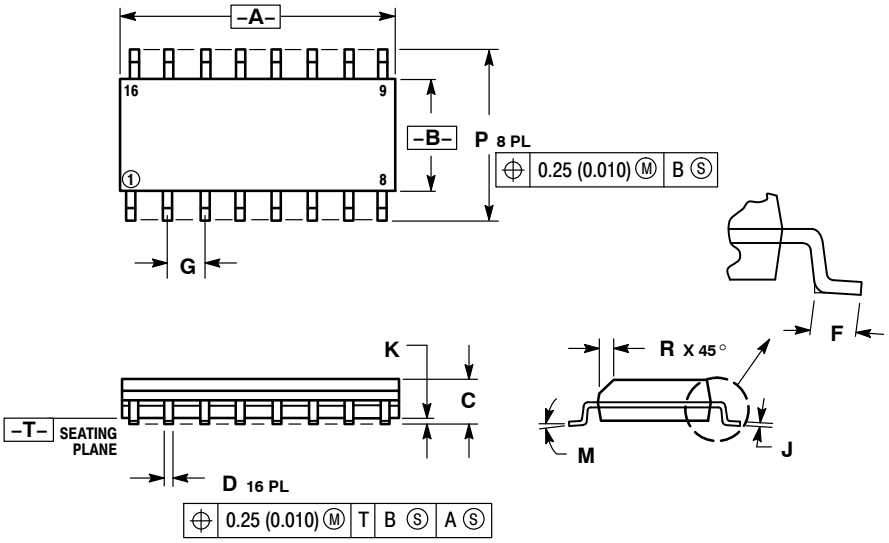

NOTES:
1. DIMENSIONING AND TOLERANCING PER ANSI Y14.5M, 1982.
2. CONTROLLING DIMENSION: MILLIMETER.
3. DIMENSIONS A AND B DO NOT INCLUDE MOLD PROTRUSION.
4. MAXIMUM MOLD PROTRUSION 0.15 (0.006) PER SIDE.
5. DIMENSION D DOES NOT INCLUDE DAMBAR PROTRUSION. ALLOWABLE DAMBAR PROTRUSION SHALL BE 0.127 (0.005) TOTAL IN EXCESS OF THE D DIMENSION AT MAXIMUM MATERIAL CONDITION.

	MILLIMETERS		INCHES	
DIM	MIN	MAX	MIN	MAX
A	9.80	10.00	0.386	0.393
B	3.80	4.00	0.150	0.157
C	1.35	1.75	0.054	0.068
D	0.35	0.49	0.014	0.019
F	0.40	1.25	0.016	0.049
G	1.27 BSC		0.050 BSC	
J	0.19	0.25	0.008	0.009
K	0.10	0.25	0.004	0.009
M	0°	7°	0°	7°
P	5.80	6.20	0.229	0.244
R	0.25	0.50	0.010	0.019

SOLDERING FOOTPRINT*

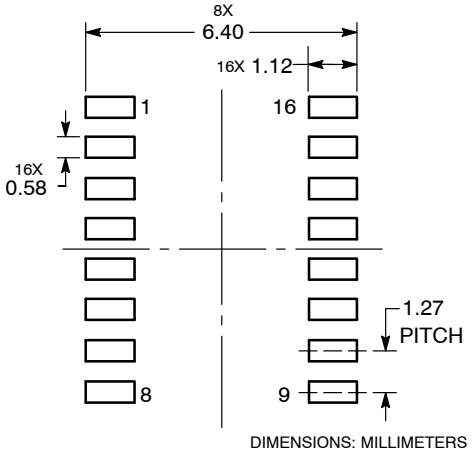

*For additional information on our Pb−Free strategy and soldering details, please download the ON Semiconductor Soldering and Mounting Techniques Reference Manual, SOLDERRM/D.

PACKAGE DIMENSIONS

TSSOP−16
DT SUFFIX
PLASTIC TSSOP PACKAGE
CASE 948F−01
ISSUE B

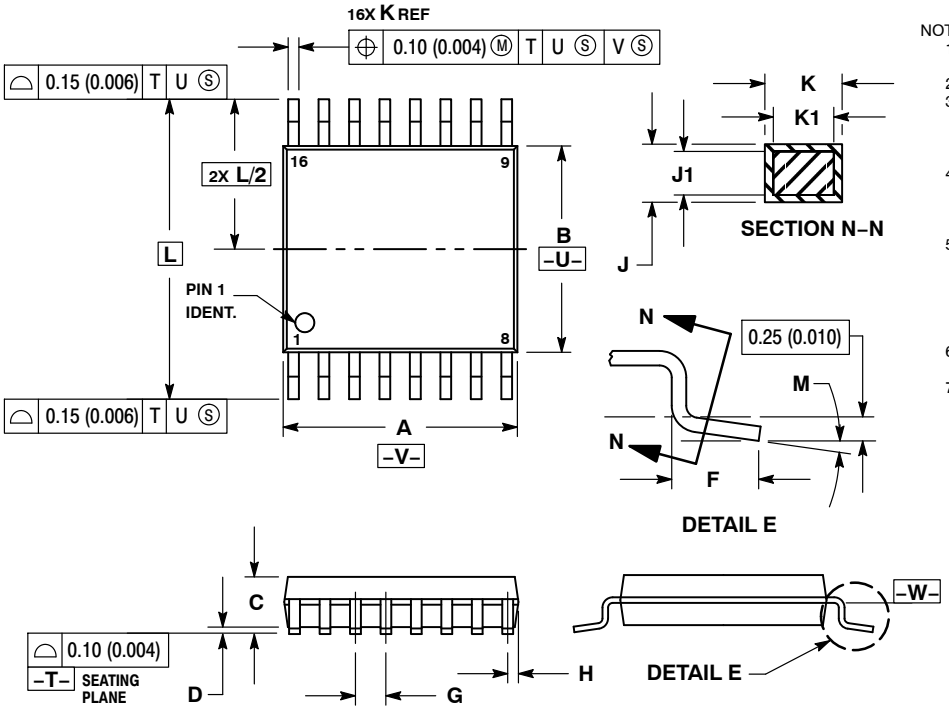

NOTES:
1. DIMENSIONING AND TOLERANCING PER ANSI Y14.5M, 1982.
2. CONTROLLING DIMENSION: MILLIMETER.
3. DIMENSION A DOES NOT INCLUDE MOLD FLASH. PROTRUSIONS OR GATE BURRS. MOLD FLASH OR GATE BURRS SHALL NOT EXCEED 0.15 (0.006) PER SIDE.
4. DIMENSION B DOES NOT INCLUDE INTERLEAD FLASH OR PROTRUSION. INTERLEAD FLASH OR PROTRUSION SHALL NOT EXCEED 0.25 (0.010) PER SIDE.
5. DIMENSION K DOES NOT INCLUDE DAMBAR PROTRUSION. ALLOWABLE DAMBAR PROTRUSION SHALL BE 0.08 (0.003) TOTAL IN EXCESS OF THE K DIMENSION AT MAXIMUM MATERIAL CONDITION.
6. TERMINAL NUMBERS ARE SHOWN FOR REFERENCE ONLY.
7. DIMENSION A AND B ARE TO BE DETERMINED AT DATUM PLANE −W−.

	MILLIMETERS		INCHES	
DIM	MIN	MAX	MIN	MAX
A	4.90	5.10	0.193	0.200
B	4.30	4.50	0.169	0.177
C	−−−	1.20	−−−	0.047
D	0.05	0.15	0.002	0.006
F	0.50	0.75	0.020	0.030
G	0.65 BSC		0.026 BSC	
H	0.18	0.28	0.007	0.011
J	0.09	0.20	0.004	0.008
J1	0.09	0.16	0.004	0.006
K	0.19	0.30	0.007	0.012
K1	0.19	0.25	0.007	0.010
L	6.40 BSC		0.252 BSC	
M	0 °	8 °	0 °	8 °

SOLDERING FOOTPRINT*

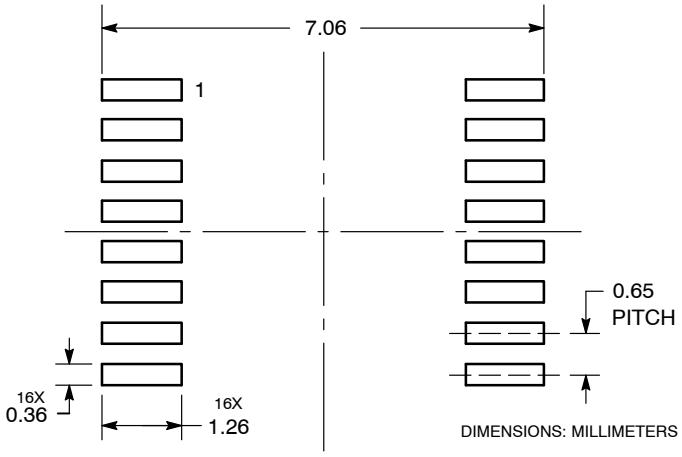

*For additional information on our Pb−Free strategy and soldering details, please download the ON Semiconductor Soldering and Mounting Techniques Reference Manual, SOLDERRM/D.

PACKAGE DIMENSIONS

SOEIAJ−16
F SUFFIX
PLASTIC EIAJ SOIC PACKAGE
CASE 966−01
ISSUE A

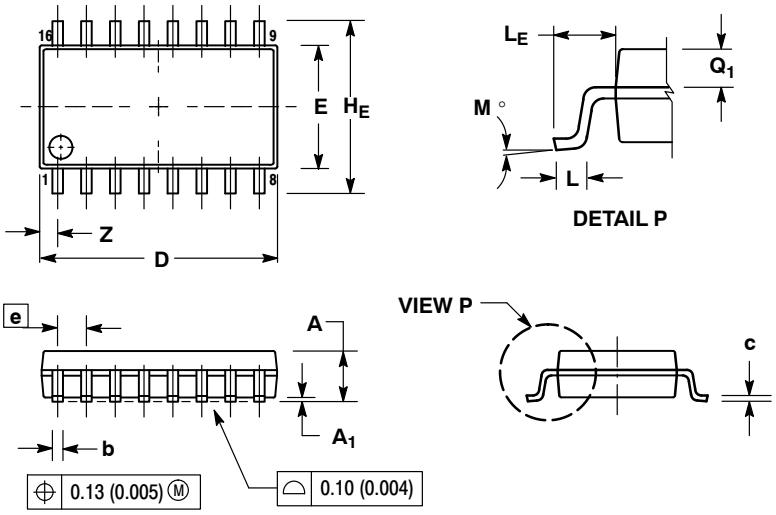

NOTES:
1. DIMENSIONING AND TOLERANCING PER ANSI Y14.5M, 1982.
2. CONTROLLING DIMENSION: MILLIMETER.
3. DIMENSIONS D AND E DO NOT INCLUDE MOLD FLASH OR PROTRUSIONS AND ARE MEASURED AT THE PARTING LINE. MOLD FLASH OR PROTRUSIONS SHALL NOT EXCEED 0.15 (0.006) PER SIDE.
4. TERMINAL NUMBERS ARE SHOWN FOR REFERENCE ONLY.
5. THE LEAD WIDTH DIMENSION (b) DOES NOT INCLUDE DAMBAR PROTRUSION. ALLOWABLE DAMBAR PROTRUSION SHALL BE 0.08 (0.003) TOTAL IN EXCESS OF THE LEAD WIDTH DIMENSION AT MAXIMUM MATERIAL CONDITION. DAMBAR CANNOT BE LOCATED ON THE LOWER RADIUS OR THE FOOT. MINIMUM SPACE BETWEEN PROTRUSIONS AND ADJACENT LEAD TO BE 0.46 (0.018).

	MILLIMETERS		INCHES	
DIM	MIN	MAX	MIN	MAX
A	−−−	2.05	−−−	0.081
A_1	0.05	0.20	0.002	0.008
b	0.35	0.50	0.014	0.020
c	0.10	0.20	0.007	0.011
D	9.90	10.50	0.390	0.413
E	5.10	5.45	0.201	0.215
e	1.27 BSC		0.050 BSC	
H_E	7.40	8.20	0.291	0.323
L	0.50	0.85	0.020	0.033
L_E	1.10	1.50	0.043	0.059
M	0 °	10 °	0 °	10 °
Q_1	0.70	0.90	0.028	0.035
Z	−−−	0.78	−−−	0.031

ON Semiconductor and ON are registered trademarks of Semiconductor Components Industries, LLC (SCILLC). SCILLC reserves the right to make changes without further notice to any products herein. SCILLC makes no warranty, representation or guarantee regarding the suitability of its products for any particular purpose, nor does SCILLC assume any liability arising out of the application or use of any product or circuit, and specifically disclaims any and all liability, including without limitation special, consequential or incidental damages. “Typical” parameters which may be provided in SCILLC data sheets and/or specifications can and do vary in different applications and actual performance may vary over time. All operating parameters, including “Typicals” must be validated for each customer application by customer’s technical experts. SCILLC does not convey any license under its patent rights nor the rights of others. SCILLC products are not designed, intended, or authorized for use as components in systems intended for surgical implant into the body, or other applications intended to support or sustain life, or for any other application in which the failure of the SCILLC product could create a situation where personal injury or death may occur. Should Buyer purchase or use SCILLC products for any such unintended or unauthorized application, Buyer shall indemnify and hold SCILLC and its officers, employees, subsidiaries, affiliates, and distributors harmless against all claims, costs, damages, and expenses, and reasonable attorney fees arising out of, directly or indirectly, any claim of personal injury or death associated with such unintended or unauthorized use, even if such claim alleges that SCILLC was negligent regarding the design or manufacture of the part. SCILLC is an Equal Opportunity/Affirmative Action Employer. This literature is subject to all applicable copyright laws and is not for resale in any manner.

PUBLICATION ORDERING INFORMATION

LITERATURE FULFILLMENT:
Literature Distribution Center for ON Semiconductor
P.O. Box 5163, Denver, Colorado 80217 USA
Phone: 303−675−2175 or 800−344−3860 Toll Free USA/Canada
Fax: 303−675−2176 or 800−344−3867 Toll Free USA/Canada
Email: orderlit@onsemi.com

N. American Technical Support: 800−282−9855 Toll Free USA/Canada
Europe, Middle East and Africa Technical Support:
Phone: 421 33 790 2910
Japan Customer Focus Center
Phone: 81−3−5773−3850

ON Semiconductor Website: **www.onsemi.com**

Order Literature: http://www.onsemi.com/orderlit

For additional information, please contact your local Sales Representative

Мы молодая и активно развивающаяся компания в области поставок электронных компонентов. Мы поставляем электронные компоненты отечественного и импортного производства напрямую от производителей и с крупнейших складов мира.

Благодаря сотрудничеству с мировыми поставщиками мы осуществляем комплексные и плановые поставки широчайшего спектра электронных компонентов.

Собственная эффективная логистика и склад в обеспечивает надежную поставку продукции в точно указанные сроки по всей России.

Мы осуществляем техническую поддержку нашим клиентам и предпродажную проверку качества продукции. На все поставляемые продукты мы предоставляем гарантию .

Осуществляем поставки продукции под контролем ВП МО РФ на предприятия военно-промышленного комплекса России , а также работаем в рамках 275 ФЗ с открытием отдельных счетов в уполномоченном банке. Система менеджмента качества компании соответствует требованиям ГОСТ ISO 9001.

Минимальные сроки поставки, гибкие цены, неограниченный ассортимент и индивидуальный подход к клиентам являются основой для выстраивания долгосрочного и эффективного сотрудничества с предприятиями радиоэлектронной промышленности, предприятиями ВПК и научно-исследовательскими институтами России.

С нами вы становитесь еще успешнее!

Наши контакты:

Телефон: +7 812 627 14 35

Электронная почта: sales@st-electron.ru

Адрес: 198099, Санкт-Петербург, Промышленная ул, дом № 19, литера Н, помещение 100-Н Офис 331