SIMM Series Input Modules

* 6.2 mm wide and 65 mm deep
* DIN Rail mounted
* LED input status indicator
* Bridges enable quick linking of common voltage
* Identification zone on front face
* IP20

Part numbers

	84145061	84145062	84145064	84145066	84145071
Input Characteristics (at ambient 25 C°)					
Nominal voltage	24Vac/dc	24Vac/dc	120	240	5 - 28
Operating voltage range	19.2-30Vac/dc	19.2-30Vac/dc	95-121Vac/dc	195-253Vac/dc	19.2-30Vac/dc
Max input current	20 mA	20 mA	5 mA	5 mA	20 mA
Output characteristics (at ambient 25 C°)					
Max Voltage	30Vac/36Vdc	30Vac/36Vdc	30Vac/36Vdc	30Vac/36Vdc	30Vac/36Vdc
Max current	50 mA	50 mA	50 mA	50 mA	50 mA
General characteristics					
Operating temperature range	-25 to 60°C	-25 to 60°C	-25 to 60°C	-25 to 60°C	-25 to 60°C
Storage temperature range	-40 to 80°C	-40 to 80°C	-40 to 80°C	-40 to 80°C	-40 to 80°C
Turn-On time	8 ms	8 ms	8 ms	8 ms	8 ms
Turn-Off time	10 ms	10 ms	10 ms	10 ms	10 ms
Switching frequency	10 Hz	10 Hz	10 Hz	10 Hz	10 Hz
Mechanical Life (operations)	$> 10 \times 10^6$	$> 10 \times 10^6$	$> 10 \times 10^6$	$> 10 \times 10^6$	$> 10 \times 10^6$
Electrical Life (number of operation)	6×10^6	6×10^6	6×10^6	6×10^6	6×10^6
Weight	1.23 oz	1.23 oz	1.23 oz	1.23 oz	1.23 oz
Contact Material	AgSnO2 gold plated				
Contact Arrangement	SPDT	SPDT	SPDT	SPDT	SPST (N.O.)

Note: Exceeding the value given for the output relay current will remove the gold plating from the contacts and therefore we cannot guarantee correct operation at low currents.

Dimensions:

SPDT

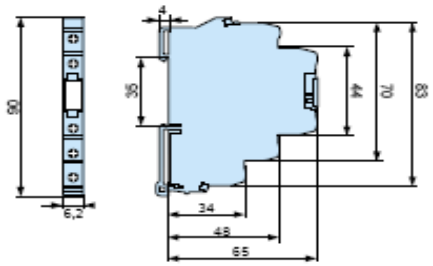

SPST

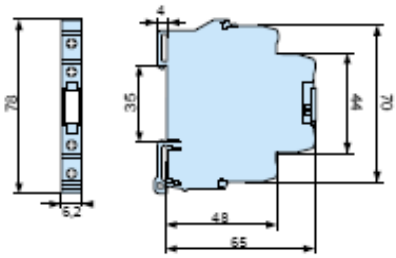

Wiring Diagram and Thermal Curves:

84145061 / 062 / 064 / 066

84145071

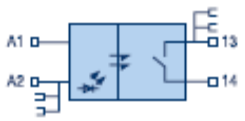

Accessories

84145050

Front Panel marker (88 per bag)

84145052

10 postion jumper - Blue

84145051

2 Pole "Common" Jumper

84145053

10 postion jumper - Red

SIMM Series Output Modules

* 6.2 mm wide and 65 mm deep
* DIN Rail mounted
* LED input status indicator
* Bridges enable quick linking of common voltage
* Identification zone on front face
* IP20

Part numbers

	84145001	84145004	84145005	84145010	84145011	84145015
Input Characteristics (at ambient 25 C°)						
Nominal voltage	24Vdc	110Vac/dc	230Vac	5Vdc	24Vdc	230Vac
Operating voltage range	10-44Vdc	70-130Vac/dc	90-230Vac	4-5.5Vdc	10-44Vdc	90-230Vac
Max input current	6 mA	7 mA	8.5 mA	6 mA	6 mA	7mA
Drop out voltage	5Vdc	30Vac/dc	40Vac	2Vdc	3Vdc	40Vac
Output Characteristics (at ambient 25 C°)						
Operating voltage range	5-48Vdc	5-48Vdc	5-48Vdc	5-48Vdc	5-48Vdc	5-48Vdc
Max current	0.5A	0.5A	0.5A	2A	2A	2A
Output Type	Transistor	Transistor	Transistor	Transistor	Transistor	Transistor
General Characteristics						
Operating temperature range	-20 to 60°C	-20 to 60°C	-20 to 60°C	-20 to 60°C	-20 to 60°C	-20 to 60°C
Storage temperature range	-40 to 80°C	-40 to 80°C	-40 to 80°C	-40 to 80°C	-40 to 80°C	-40 to 80°C
Turn-On time	20 us	30 ms	45 ms	1 ms	1 ms	1 ms
Turn-Off time	100 us	20 ms	15 ms	5 ms	5 ms	10 ms
Switching frequency	1k Hz	10 Hz	10 Hz	10 Hz	10 Hz	10 Hz
Weight	1.13 oz	1.13 oz	1.13 oz	1.06 oz	1.06 oz	1.06 oz

Part numbers

	84145020	84145021	84145024	84145025	84145031
Input Characteristics (at ambient 25 C°)					
Nominal voltage	5Vdc	24Vdc	110Vac/dc	230Vac	24Vdc
Operating voltage range	4-6.2Vdc	10-44Vdc	70-130Vac/dc	140-250Vac	10-44Vdc
Max input current	6mA	6mA	6mA	7mA	6 mA
Drop out voltage	2Vdc	3Vdc	35Vac/dc	80Vac	3Vdc
Output Characteristics (at ambient 25 C°)					
Operating voltage range	24-250Vac	24-250Vac	24-250Vac	24-250Vac	24-250Vac
Max current	0.5A	0.5A	0.5A	0.5A	1A
Output Type	Triac	Triac	Triac	Triac	Triac
General Characteristics					
Operating temperature range	-20 to 60°C	-20 to 60°C	-20 to 60°C	-20 to 60°C	-20 to 60°C
Storage temperature range	-40 to 80°C	-40 to 80°C	-40 to 80°C	-40 to 80°C	-40 to 80°C
Turn-On time	10 ms	10 ms	10 ms	10 ms	8.33 ms
Turn-Off time	10 ms	10 ms	10 ms	10 ms	8.33 ms
Switching frequency	20 Hz	20 Hz	20 Hz	20 Hz	20 Hz
Weight	1.13 oz	1.13 oz	1.13 oz	1.13 oz	.95 oz

Derating Curves:

84145001 / 004 / 005
84145010 / 011 / 015

84145001 / 004 / 005
84145020 / 021 / 024 / 025

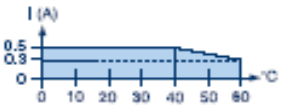

84145010 / 011 / 015

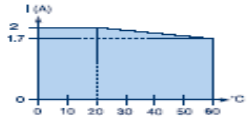

84145020 / 021 / 024 / 025

84145031

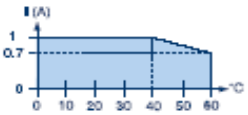

84145031

Dimensions:

Solid State Output:

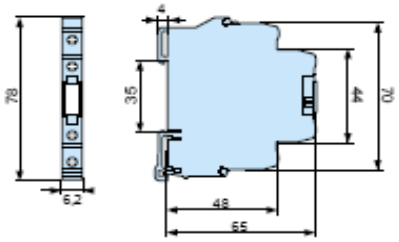

SIMM Series Output Modules

* 6.2 mm wide and 65 mm deep
* DIN Rail mounted
* LED input status indicator
* Bridges enable quick linking of common voltage
* Identification zone on front face
* IP20

Part numbers

	84145041	84145042	84145043	84145046
Input Characteristics (at ambient 25 C°)				
Nominal voltage	24Vdc	24Vac/dc	110Vac/dc	230Vac
Operating voltage range	19.2-30Vdc	19.2-30Vac/dc	95-125Vac/dc	195-253Vac/dc
Max input current	20 mA	20 mA	5 mA	6
Output Characteristics (at ambient 25 C°)				
Operating voltage range	1-250Vac	1-250Vac	1-250Vac	1-250Vac
Max current	6A	6A	6A	6A
General Characteristics				
Operating temperature range	-25 to 60°C	-25 to 60°C	-25 to 60°C	-25 to 60°C
Storage temperature range	-40 to 80°C	-40 to 80°C	-40 to 80°C	-40 to 80°C
Turn-On time	8 ms	8 ms	8 ms	8 ms
Turn-Off time	10 ms	10 ms	10 ms	10 ms
Switching frequency	10 Hz	10 Hz	10 Hz	10 Hz
Mechanical Life (operations)	> 10 x 10^6	> 10 x 10^6	> 10 x 10^6	> 10 x 10^6
Electrical Life (number of operation)	6 x 10^6	6 x 10^6	6 x 10^6	6 x 10^6
Weight	1.23 oz	1.23 oz	1.23 oz	1.23 oz
Contact Material	AgSnO2			
Contact Arrangement	SPDT	SPDT	SPDT	SPDT

Dimensions:

Relay Output:

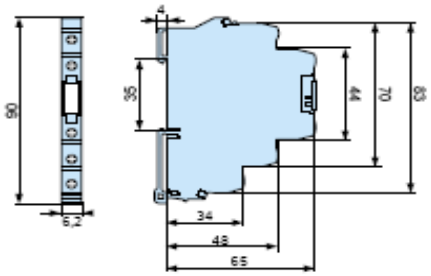

Wiring Diagram and Thermal Curves:

84145041 / 042 / 043 / 046

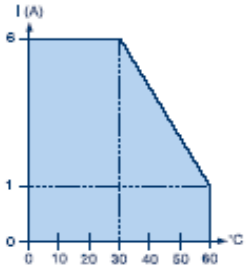

Accessories

84145050

Front Panel marker (88 per bag)

84145052

10 postion jumper - Blue

84145051

2 Pole "Common" Jumper

84145053

10 postion jumper - Red

Hybrid power relays - RHP

- **20 A in a case only 17.5 mm wide**
- **Service life > 5 million operations at full load**
- **Silent operation**
- **Functions: contactor – impulse relay – day/night contactor**
- **Clips onto a 35 mm DIN rail**
- **UL/©UL (listed) approval pending**
- **NF-USE label pending**
- **"CE" / Low Voltage Directive conformity**

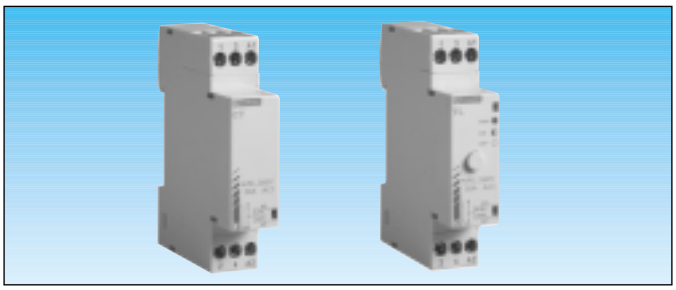

Operating principles

Contactor

The contactor output is closed when the control voltage is present at the control input terminals.
The contactor output is open when there is no voltage at the control input terminals.
The LED is lit when the output is active.

Impulse relay

The impulse relay output changes state on each impulse at the control input terminals, and remains in that state between each impulse. The output changes state on the rising edge of the control state change.
The pushbutton on the front can be used to select an operating mode:
Automatic (LED lit): Impulse relay function (Auto)
Forced operation (LED flashing): output closed (ON)
Stop (LED not lit): output open (OFF)

Day/night contactor

The contactor output is closed when the control voltage is present at the control input terminals.
The contactor output is open when there is no voltage at the control input terminals.
The pushbutton on the front can be used to select an operating mode:
Automatic (LED lit): Day/night contactor function (Auto)
Forced operation (LED flashing): output closed (ON)
When the control changes state, the day/night contactor reverts to automatic mode.
Stop (LED not lit): output open (OFF)

Conformity with standards

IEC/EN 60947-4-3 (industrial environment)
IEC/EN 60669-2-1 (domestic environment)
IEC/EN 60601-1 (medical environment)
IEC/EN 60947-7-1 (connection for industrial env.)
IEC/EN 60998-2-1 (connection for domestic env.)

Insulation coordination:
Installation category: 3
Degree of pollution: 3
According to IEC 60664-1: 4KV/3
Breakdown voltage according to IEC/EN60669-2-1:
2 KV/1Min / 1mA / 50 Hz
Insulation resistance according to IEC/EN60669-2-1:
> 5MΩ/500VDC / 1Min
Vibrations according to IEC/EN60068-2-6: frequencies: 10 to 55Hz
amplitude: 0.35 mm

Part numbers (and voltages) 1

Contactor control ∼	84 138 001
Contactor control ⎓	84 138 000
Impulse relay control ∼	84 138 101
Day/night contactor control ⎓	84 138 201

Input characteristics

Voltage	90…260 V a	0…32 V c
Frequency	50 / 60 Hz	
Thresholds – OFF control	0 to 46 V ∼	0 to 1 V ⎓
Thresholds – ON control	76 to 260 V ∼	4 to 32 V ⎓
Minimum duration of the control	50 ms	50 ms

Output characteristics

Voltage	90…260 V ∼
Max. current	20 A in AC1 / AC51 / AC7a
Overload current 20 A	AC-51 : 1,25 x Ie – 60s : 50 - 30 (IEC 60947-4-3)
Min. current	100 mA in AC1 / AC51 / AC7a
Frequency	50 / 60 Hz
Contact	N.O.
Number of operations	> 5 000 000
Leakage current	< 5 mA
Acoustic noise – in steady state	< 35 dB at 1 m
Acoustic noise – on switching	< 50 dB at 0.5 m
Terminal block clamping capacity:	2 x 1.5 mm² with ferrule 2 x 2.5 mm² without ferrule 1 x 4 mm² without ferrule
Terminal tightening torque	1 Nm max. M3 screw (IEC60947-1)
Operating temperature	-5 °C to +55 °C
Storage temperature	-40 °C to +85 °C
Relative humidity	90 to 95 % without condensation
Casing material	Self-extinguishing
Degree of protection (according to IEC 60529)	IP 50 casing IP 20 terminal block
Weight (g)	70 approx.

Connection

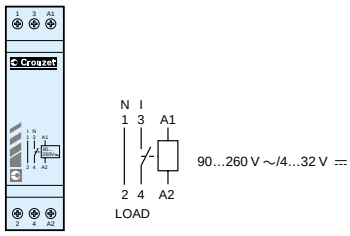

Dimensions

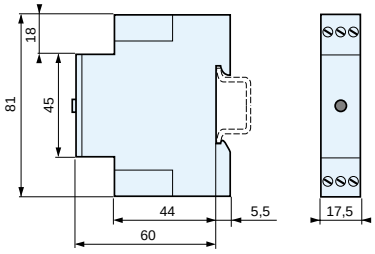

To order, specify:

Standard products

1 Part number
Example : Solid state relays - RHP - 84 138 001

Two-phase (dual) solid state relays - GD range

- For controlling three-phase supplies
- Controls two or three phases of the supply
- Applied to star or delta-connected two-phase resistances with neutral not connected
- Rating 25 A and 40 A
- Output voltages from 24 to 280 V and 36 to 530 V
- Back-to-back SCRs
- Zero voltage switching
- Input to output insulation voltage: 4000 V
- Protection by RC filter
- UL - cUL approval and CE marking

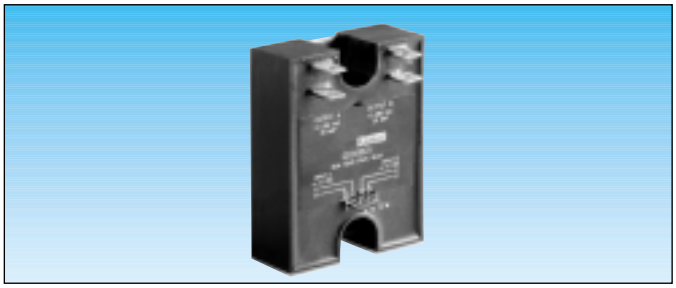

Output specifications

Voltage range (Vrms max)	**24-280**	**24-280**	**36-530**
Peak voltage (t=1 min.) (Vpeak)	600	600	1200
Maximum current (Vpeak)	25	40	40
Maximum current(mArms)	7	7	7
Minimum current (mArms)	100	100	100
Max. 1-cycle surge T=25°C (A peak)	250	500	500
Max. 1-second surge T=25°C (A peak)	67	145	135
On-state voltage drop at Imax and T=25°C (Vpeak)	1.6	1.6	1.6
I^2t (t=10ms) A^2s	260	1260	1260
Thermal resistance - Junction to casing (°C/W)	1.5	0.25	0.25
Static (off-state) dv/dt (Vµs)	500	500	500
Supply frequency range (Hz)	47-63	47-63	47-63
cos φ (Zero voltage)	> 0.5	> 0.5	> 0.5

Input specifications

Input voltage(V)	**4-15 ⎓**		
Drop-out voltage (V ⎓)	1		
Maximum current (at Vmax) (mA)	32	—	—
Response time (close)			
Zero voltage switching (ms)	10		
Instantaneous switching (ms)	0,1		
Response time (open)			
Zero voltage switching (ms)	10		
Instantaneous switching (ms)	10		

Characteristics

Operating temperature (°C)	-20 à +80		
Storage temperature (°C)	-40 à +100		
Input to output insulation voltage (Vrms)	4000		
Breakdown voltage (Vrms)	2500		
Input/output capacitance (pF)	8	5	5
Material Casing	Self-extinguishing (UL 94 V0)		
Baseplate	Aluminium		
Weight (g)	450		

Equivalent circuits

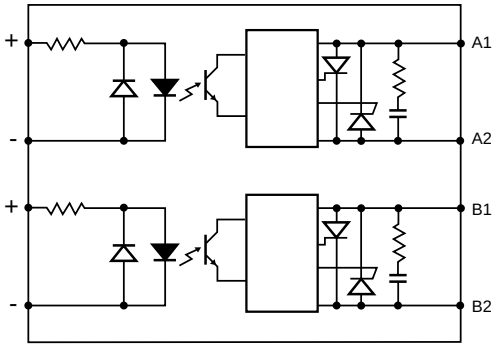

Part numbers

1

Two-phase relays 25 A

Switching	Output voltage	Input voltage	Connection diagram	
Zero voltage	24 - 280 V ~	4 - 15 V ⎓	B	**84 130 210**
Instantaneous	24 - 280 V ~	4 - 15 V ⎓	B	**84 130 211**

Two-phase relays 40 A

Switching	Output voltage	Input voltage	Connection diagram	
Zero voltage	24 - 280 V ~	4 - 15 V ⎓	D	**84 130 230**
Instantaneous	24 - 280 V ~	4 - 15 V ⎓	D	**84 130 231**
Zero voltage	36 - 530 V ~	4 - 15 V ⎓	D	**84 130 240**
Instantaneous	36 - 530 V ~	4 - 15 V ⎓	D	**84 130 241**
Zero voltage	24 - 280 V ~	4 - 15 V ⎓	C	**84 130 250**
Instantaneous	24 - 280 V ~	4 - 15 V ⎓	C	**84 130 251**
Zero voltage	36 - 530 V ~	4 - 15 V ⎓	C	**84 130 260**
Instantaneous	36 - 530 V ~	4 - 15 V ⎓	C	**84 130 261**
Zero voltage	24 - 280 V ~	4 - 15 V ⎓	B	**84 130 270**
Instantaneous	24 - 280 V ~	4 - 15 V ⎓	B	**84 130 271**
Zero voltage	36 - 530 V ~	4 - 15 V ⎓	A	**84 130 280**
Instantaneous	36 - 530 V ~	4 - 15 V ⎓	A	**84 130 281**

Accessories (see catalogue pages 4/30 to 4/32)

2

Heatsinks	
Heat transfer compound	**18 373 112**
DIN rail adaptor	**26 532 764**
Quick-blow fuses	

Thermal dissipation curves

25 A

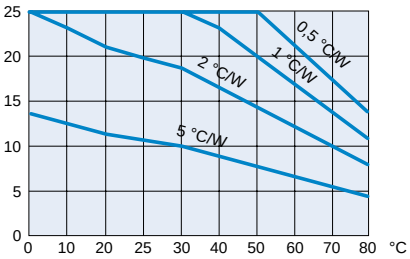

40 A

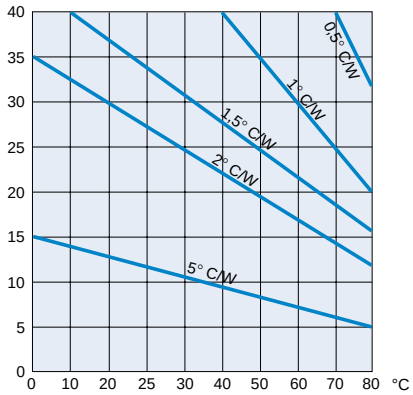

To order, specify:

Standard products

Standard products, non stocked

1 Part number 2 Accessory

Exemple: Two-phase solid state relay 25 A 84 130 210 - DIN rail adaptor 26 532 764

Crouzet

Courtesy of Steven Engineering, Inc. • 230 Ryan Way, South San Francisco, CA, 94080-6370 • Main Office: (650) 588-9200 • Outside Local Area: (800) 258-9200 • www.stevenengineering.com

Two-phase (dual) solid state relays - GD range

Dimensions

A

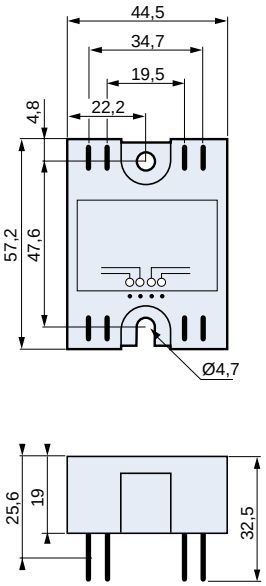

B

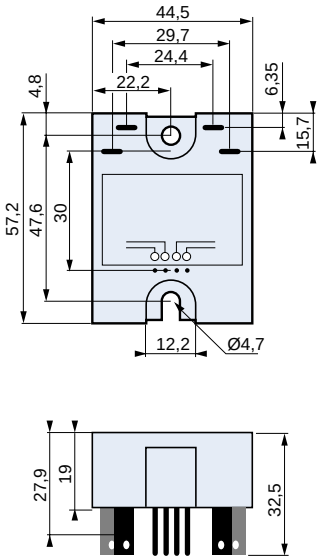

C

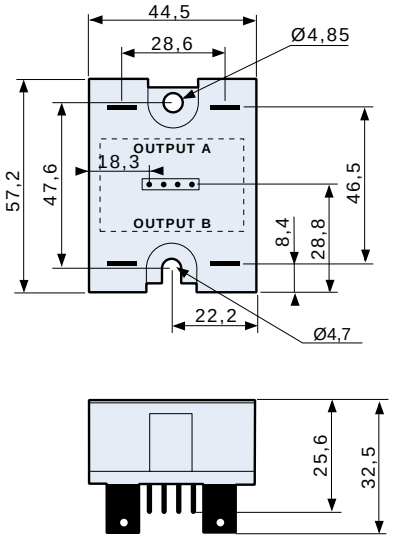

D

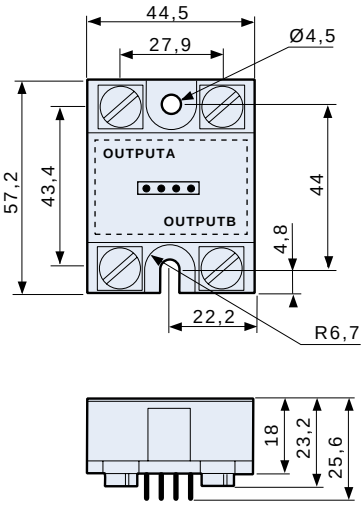

Courtesy of Steven Engineering, Inc. • 230 Ryan Way, South San Francisco, CA, 94080-6370 • Main Office: (650) 588-9200 • Outside Local Area: (800) 258-9200 • www.stevenengineering.com

GD two-phase (dual) relay

For accessories see page 4/10

- For controlling three-phase supplies
- Controls two or three phases of the supply
- Used on star or delta-connected two-phase resistors with neutral not connected
- Rating 25 A
- Output voltages from 24 to 280 V
- Back-to-back SCRs
- Zero voltage switching
- Input to output insulation voltage : 4000 V
- Protection by RC filter
- UL/CSA and CE approved

To order

Versions	Rating	Output voltages	Input voltages	Peak voltages	Part number
Zero voltage switching	25 A	24 • 280 V ∼	4 • 15 V ⎓	600 V	84 130 210
Instantaneous switching	25 A	24 • 280 V ∼	4 • 15 V ⎓	600 V	84 130 211
Zero voltage switching	40 A	24 • 280 V ∼	4 • 15 V ⎓	600 V	84 130 230
Instantaneous switching	40 A	24 • 280 V ∼	4 • 15 V ⎓	600 V	84 130 231

Thermal curves

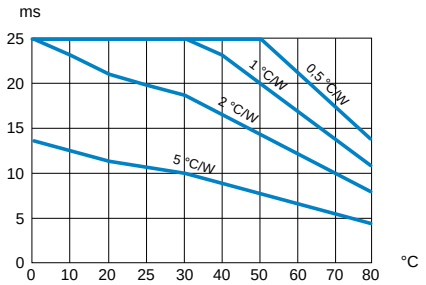

Dimensions

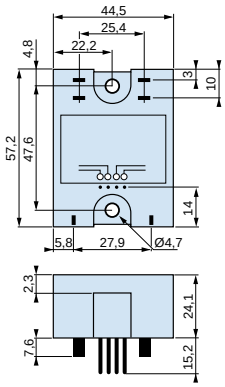

Accessories for solid state relays

Heatsinks

To order

	Range	Thermal resistance	Length	Weight	Part number
1 phase	G, GA5, GT, GF Material : black anodised aluminium	2 °C/W	L = 70 mm	260 g	26 532 760
1 phase	G, GA5, GT, GF Material : black anodised aluminium	3 °C/W	L = 58 mm	250 g	26 532 761
3 phases or 2 x 1 phase	2 x G, GA5, GT, GF 1 x GA0, GA3 Material : black anodised aluminium	0.7 °C/W	L = 75 mm	655 g	26 532 762
1 phase	G, GA5, GT, GF, GN Material : black anodised aluminium	2 °C/W	L = 50 mm	150 g	26 532 758

Adaptors for panel mounting (lot of 4)

For heatsink	26 532 758	26 532 801

26 532 760

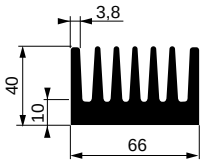

26 532 761

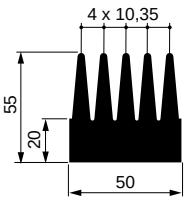

26 532 762

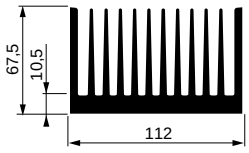

26 532 758

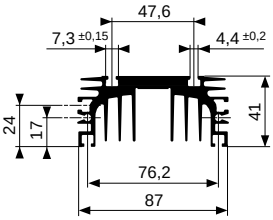

26 532 801

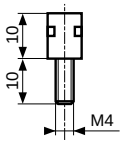

For other products, consult our specialist catalogues… For other products, consult our specialist catalogues…

Crouzet

Courtesy of Steven Engineering, Inc. • 230 Ryan Way, South San Francisco, CA, 94080-6370 • Main Office: (650) 588-9200 • Outside Local Area: (800) 258-9200 • www.stevenengineering.com

DIN rail adaptor

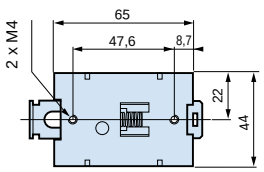

To order

Characteristics	Weight	Part number
Suitable for use with heatsinks 26 532 760, 26 532 761 and 26 532 762	55 g	26 532 764

Heat transfer compound

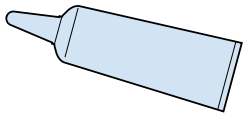

To order

Material	Weight	Part number
silicon/zinc oxide paste	20 g	18 373 112

Thermal interfaces

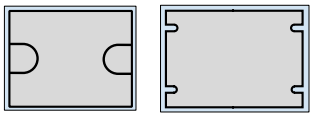

Thermstrate® thermal interface pads

To order

Characteristics	Part number
- For G, GA5, GF and GT ranges	26 532 720
- For the 3-phase GA0 range and the GA3 range	26 532 721

Solid state relay protection

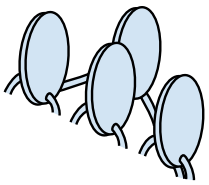

To order

	Type		Part number
Varistor	GA5 - G (24 - 280 V ∼)	In lots of 10	26 532 740
	GA3 - G (36 - 530 V ∼ and 48 - 660 V ∼)	In lots of 10	26 532 741
	GA0	Single	26 532 742
Fuses for GMS relays	GMS 3 A and C 4	In lots of 10	26 532 730
	GMS 5 A	In lots of 10	26 532 731

Protective covers

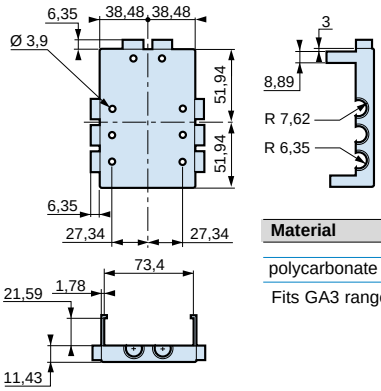

To order

Material	Part number
polycarbonate UL 94 V0 Fits GA3 range	26 532 796

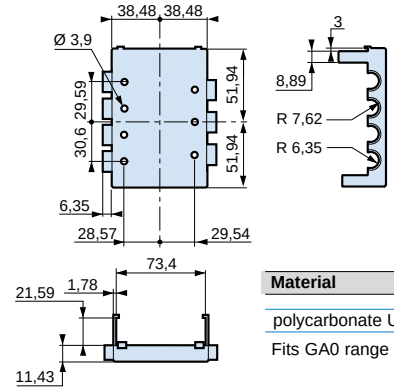

To order

Material	Part number
polycarbonate UL 94 V0 Fits GA0 range	26 532 797

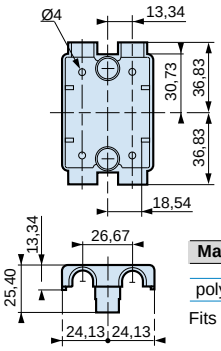

To order

Material	Weight	Part number
polycarbonate UL 94 V0 Fits G, GA5, GF and GT ranges	5 g	26 532 798

Courtesy of Steven Engineering, Inc. • 230 Ryan Way, South San Francisco, CA, 94080-6370 • Main Office: (650) 588-9200 • Outside Local Area: (800) 258-9200 • www.stevenengineering.com

G range

For accessories see page 4/9 and 4/10
For dimensions see page 4/8

- **Current from 10 to 90 A**
- **Output voltages from 24 to 660 V~**
- **Back-to-back SCRs**
- **Input voltage 90-280 V ∼ ⎓ or 3-32 V ⎓**
- **Peak voltage up to 1200 V**
- **Zero voltage or instantaneous switching**
- **Input to output insulation voltage: 4000 V**
- **Protection by RC filter**
- **UL recognised and CSA approved**

To order

Version	Rating	Output voltages	Input voltages	Peak voltages	Part number
Zero voltage switching	10 A	24 • 280 V ∼	3 • 32 V ⎓	600 V	**84 060 231**
			90 • 280 V ∼ ⎓	600 V	**84 060 233**
		36 • 530 V ∼	3 • 32 V ⎓	1200 V	**84 060 241**
	25 A	24 • 280 V ∼	3 • 32 V ⎓	600 V	**84 060 431**
		24 • 280 V ∼	90 • 280 V ∼ ⎓	600 V	**84 060 433**
		36 • 530 V ∼	3 • 32 V ⎓	1200 V	**84 060 441**
	45 A	24 • 280 V ∼	3 • 32 V ⎓	600 V	**84 060 631**
			90 • 280 V ∼ ⎓	600 V	**84 060 633**
	50 A	36 • 530 V ∼	3 • 32 V ⎓	1200 V	**84 060 741**
			90 • 280 V ∼ ⎓	1200 V	**84 060 743**
		48 • 660 V ∼	3 • 32 V ⎓	1200 V	**84 060 751**
	75 A	24 • 280 V ∼	3 • 32 V ⎓	600 V	**84 060 831**
			90 • 280 V ∼ ⎓	600 V	**84 060 833**
		36 • 530 V ∼	3 • 32 V ⎓	1200 V	**84 060 841**
	90 A	36 • 530 V ∼	3 • 32 V ⎓	1200 V	**84 060 941**

Thermal curves

G range, 24 • 280 V ∼ 10 A

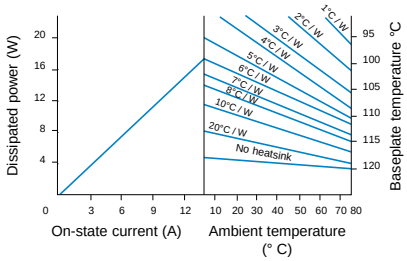

G range, 36 • 530 V ∼ 10 A

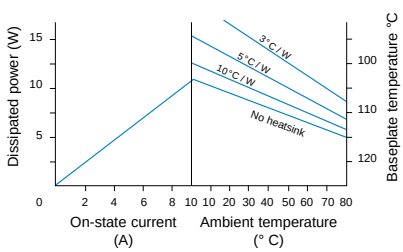

G range, 24 • 280 V ∼ 25 A

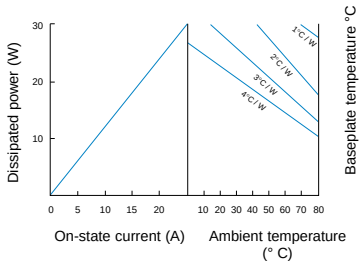

G range, 36 • 530 V ∼, 48 • 660 V ∼ 25 A

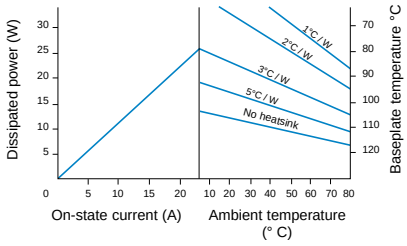

G range, 24 • 280 V ∼ 45 A

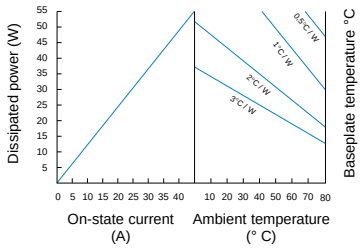

G range, 36 • 530 V ∼, 48 • 660 V ∼ 50 A

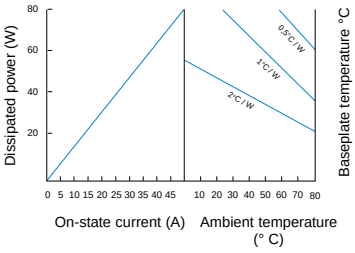

G range, 75 A

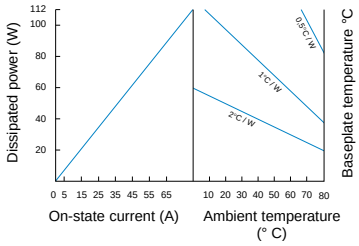

G range, 90 A

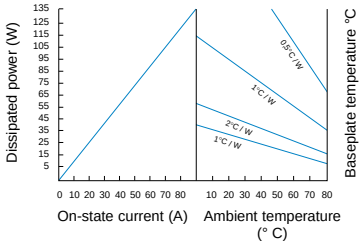

Courtesy of Steven Engineering, Inc. • 230 Ryan Way, South San Francisco, CA, 94080-6370 • Main Office: (650) 588-9200 • Outside Local Area: (800) 258-9200 • www.stevenengineering.com

For other products, consult our specialist catalogues… For other products, consult our specialist catalogues…

GA5 range

For accessories see page 4/9 and 4/10
For dimensions see page 4/8

- **TRIAC low-cost solid state relay**
- **Input voltage 3-32 V ⎓ or 90-280 V ~ ⎓**
- **Peak voltage: 600 V**
- **UL/CSA approved**
- **Certain models are VDE approved**
- **Input to output insulation voltage: 4000 V**
- **Protection by RC filter**

To order

Versions	Rating	Output voltages	Input voltages	Peak voltages	Part number
Zero voltage switching	10 A	24 • 280 V ~	3 • 32 V ⎓	600 V	**84 061 231**
			90 • 280 V ~ ⎓	600 V	**84 061 233**
Zero voltage switching	25 A	24 • 280 V ~	3 • 32 V ⎓	600 V	**84 061 431**
			90 • 280 V ~ ⎓	600 V	**84 061 433**
Faston tag connectors					
Zero voltage switching	10 A	24 • 280 V ~	3 • 32 V ⎓	600 V	**84 061 531**
	25 A	24 • 280 V ~	90 • 280 V ~ ⎓	600 V	**84 061 631**
EMC level 3	10 A	24 • 280 V ~	3 • 32 V ⎓	600 V	**84 131 900**
	25 A	24 • 280 V ~	90 • 280 V ~ ⎓	600 V	**84 131 910**

Thermal dissipation curves

GA5 range - 10 A

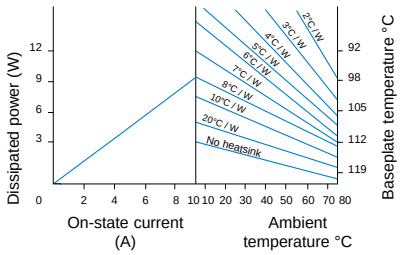

GA5 range - 25 A

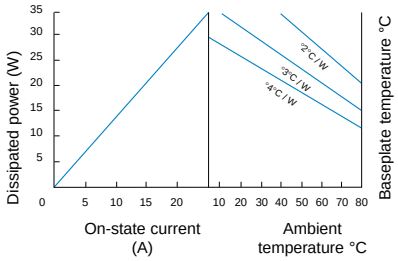

GAO range three-phase motor reversing relay

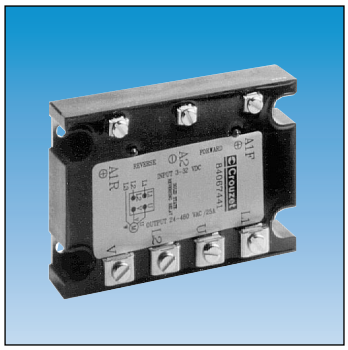

For accessories see page 4/9 and 4/10

- **Reverses rotation of three-phase motors**
- **Output voltage 24-480 V~**
- **Input voltage 3-32 V ⎓**
- **Reversal delay : 100ms**
- **Interlock against simultaneous actuation in both directions**
- **Back-to-back SCRs**
- **Input to output insulation voltage: 5000 V ~**
- **Protected by RC filter and overvoltage limiter**
- **Direction of rotation displayed by 2 green LEDS**

To order

Rating	Output voltage	Input voltage	Part number
25 A	24 • 480 V ~	3 • 32 V ⎓	**84 067 441**

Thermal curves

GAO range - 25 A

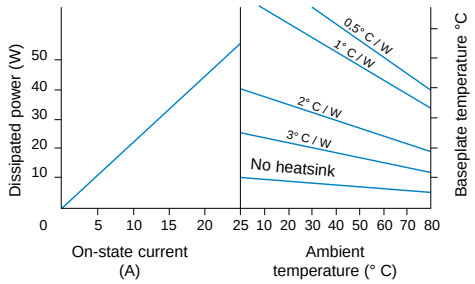

Dimensions
(General tolerances ± 0.5)

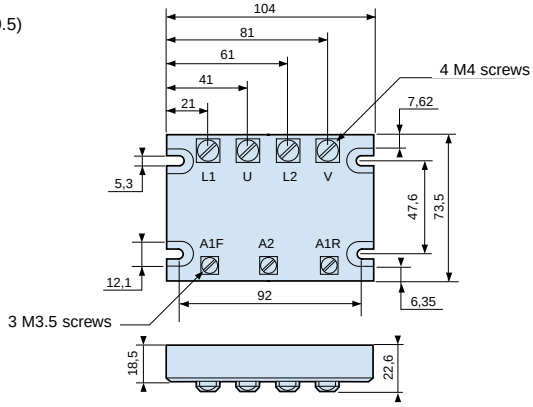

For other products, consult our specialist catalogues… For other products, consult our specialist catalogues…

Courtesy of Steven Engineering, Inc. • 230 Ryan Way, South San Francisco, CA, 94080-6370 • Main Office: (650) 588-9200 • Outside Local Area: (800) 258-9200 • www.stevenengineering.com

GF range

For accessories see page 4/9 and 4/10
For dimensions see below

- **Solid state relay for DC applications**
- **FET output - 10 A, 15 A, 30 A**
- **Very low leakage current (<10µA)**
- **Very low on-state resistance (minimises heating)**
- **Input to output insulation voltage : 1500 V**
- **Protection against polarity reversal**

To order

Rating	Output voltages	Input voltages	Part number
10 A	1 • 200 V ⎓	3 • 32 V ⎓	84 062 291
15 A	1 • 100 V ⎓	3 • 32 V ⎓	84 062 381
30 A	1 • 50 V ⎓	3 • 32 V ⎓	84 062 571

Thermal curve

GF range - 10 A

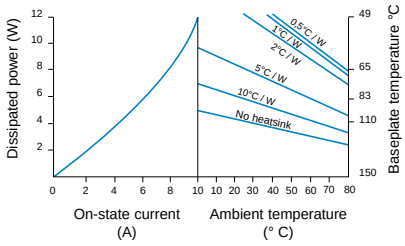

GF range - 15 A

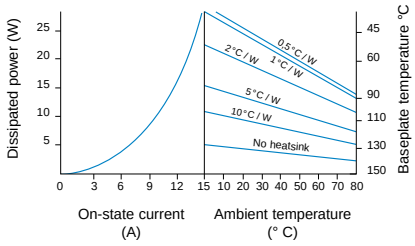

GF range - 30 A

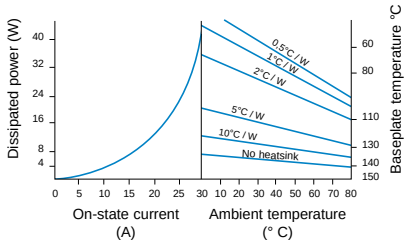

GT range

For accessories see page 4/9 and 4/10

- **Solid state relay for DC applications**
- **Transistor output - 10 A**
- **Response time < 25µs**
- **Input voltage 3-32 V ⎓**
- **UL/CSA approved**
- **Input to output insulation 4000 V ∼**

To order

Rating	Output voltage	Input voltage	Part number
10 A	3 • 60 V ⎓	3 • 32 V ⎓	84 063 261

Thermal curve

GT range - 10 A

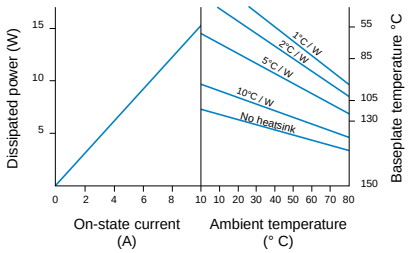

Dimensions (General tolerances ± 0.5)

G - GA5 - GF and GT ranges - 15 A

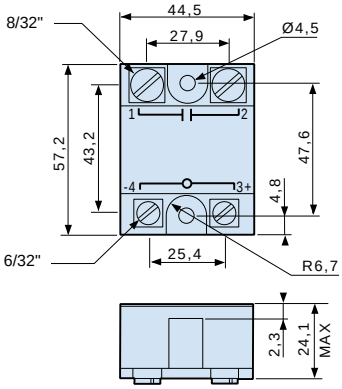

Courtesy of Steven Engineering, Inc. • 230 Ryan Way, South San Francisco, CA, 94080-6370 • Main Office: (650) 588-9200 • Outside Local Area: (800) 258-9200 • www.stevenengineering.com

Introduction

Solid state I/O modules represent a reliable control system solution which is simple to install for interfacing different voltage levels.

Output modules

Output modules can be used to control AC or DC loads using DC low-voltage logic input signals.
They can control loads of up to 5 A, and can be used over a very wide voltage range, from 5 to 48 VDC and from 120 to 240 VAC.

The control input for these modules is compatible with standard logic levels (TTL, CMOS, etc).
This makes them ideally suited to act as an interface and isolation device between one digital command (microprocessor or other), a medium-power circuit (heatsink, motor, etc), a preactuator (contactors, solenoid valves) or a signalling device (indicator lamps, audible alarms, etc).

Input modules

Input modules can be used to determine the status of an AC or DC load by producing a low-voltage logic output signal.

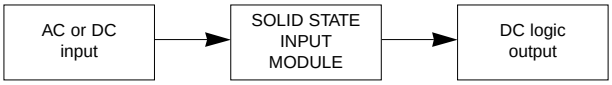

Practical

Clever use of colour means the function of an I/O can be identified immediately, greatly simplifying module identification.

Colours

- **white** : DC input module
- **yellow** : AC input module
- **red** : DC output module
- **black** : AC output module

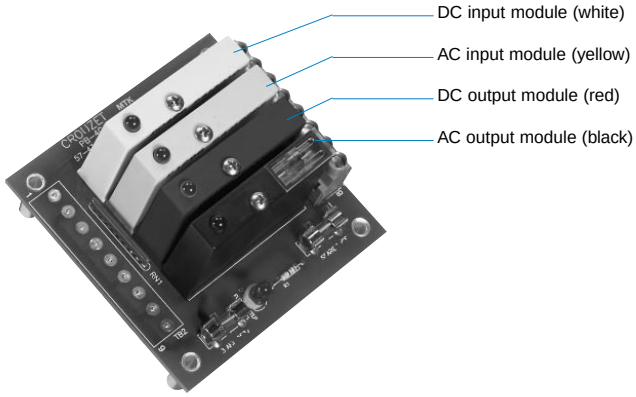

Solid state I/O modules

Solid state input modules

To order

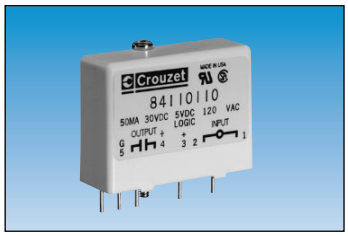

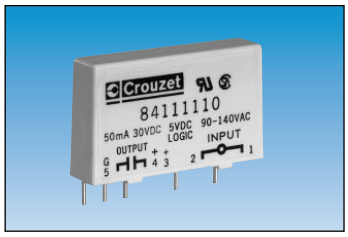

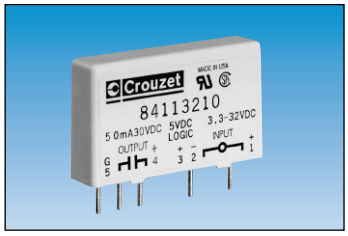

Range	Type	Output voltages	Input voltages	Part number
Standard range (15.24 mm)				
	IAC5	5 V ⎓	120 V ∼	84 110 110
	IAC5A	5 V ⎓	240 V ∼	84 110 111
	IDC5	5 V ⎓	5 - 28 V ⎓	84 110 210
	IDC5N	5 V ⎓	12 - 48 V ⎓	84 110 212
	IAC24A	24 V ⎓	240 V ∼	84 110 131
43.2 x 31.8 x 15.2 mm				
M range				
	MIAC5	5 V ⎓	120 V ∼	84 111 110
	MIACEA	5 V ⎓	240 V ∼	84 111 111
	MIDC5	5 V ⎓	5 - 28 V ⎓	84 111 210
	MIDC5N	5 V ⎓	12 - 48 V ⎓	84 111 212
43.2 x 25.4 x 10.2 mm				
SM range				
	SMIAC5	5 V ⎓	120 V ∼	84 113 110
	SMIAC5A	5 V ⎓	240 V ∼	84 113 111
	SMIDC5	5 V ⎓	5 - 28 V ⎓	84 113 210
	SMIDC5N	5 V ⎓	12 - 48 V ⎓	84 113 212
43.2 x 25.4 x 10.2 mm				

Courtesy of Steven Engineering, Inc. • 230 Ryan Way, South San Francisco, CA, 94080-6370 • Main Office: (650) 588-9200 • Outside Local Area: (800) 258-9200 • www.stevenengineering.com

Courtesy of Steven Engineering, Inc. • 230 Ryan Way, South San Francisco, CA, 94080-6370 • Main Office: (650) 588-9200 • Outside Local Area: (800) 258-9200 • www.stevenengineering.com

Output modules - Standard range 15.24 mm

- **Single channel plug-in module**
- **Input : 5 V ⎓ or 24 V ⎓**
- **Output : ~ TRIAC**
  110 V ~ or 240 V ~
  5-48 V ⎓
- **Current : 3 to 5 A**
- **Synchronous switching**
- **Standard industrial casing**

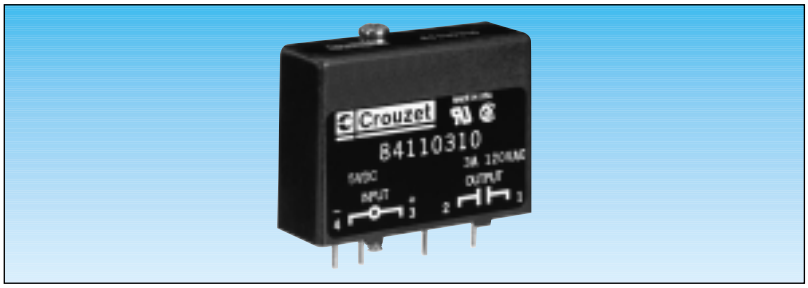

Types		OAC5	OAC5AH	OAC5A	ODC5	OAC24
Part numbers						
		84 110 310	84 110 011	84 110 311	84 110 410	84 110 330
Input characteristics (at ambient 25 °C)						
Nominal control voltage	V ⎓	5	5	5	5	24
Control voltage range	V ⎓	2.75 - 8	2.75 - 8	2.75 - 8	2.75 - 8	18 - 32
Voltage drop	V ⎓	1	1	1	1	1
Operating current	mA	20	20	20	18	13
Internal resistance	Ω	220	220	220	250	2000
Output characteristics (at ambient 25 °C)						
Nominal voltage		120 V ~	240 V ~	240 V ~	5 - 48 V ⎓	120 V ~
Operating voltage range		12 -140 V ~	24 - 280 V ~	24 - 280 V ~	3 - 60 V ⎓	12 - 140 V ~
Peak voltage		400 Vpeak	600 Vpeak	600 Vpeak	60 V ⎓	400 Vpeak
Max leakage current		3 mArms	6 mArms	6 mArms	10 µA	3 mArms
Static dv/dt - off-state	V/µs	200	200	200	—	200
Output current		3.5 Arms	5 Arms	3.5 Arms	3 A	3.5 Arms
Holding current		50 mArms	50 mArms	50 mArms	10 mA	50 mArms
Current surge (for 1 cycle in ~ and 1 s in ⎓)		100 Apeak	100 Apeak	100 Apeak	5 A	100 Apeak
Voltage drop - on-state	V	1.6	1.6	1.6	1.5	1.6
General characteristics						
Temperature limits — Use	°C	-30 +80	-30 +80	-30 +80	-30 +80	-30 +80
Temperature limits — Stored	°C	-40 +100	-40 +100	-40 +100	-40 +100	-40 +100
Response time — Turn-on	ms	8.33	0.1	8.33	0.1	8.33
Response time — Turn-off	ms	8.33	8.33	8.33	0.75	8.33
I/O isolation	V ~	4000	4000	4000	4000	4000
I/O capacity (typical)	pF	8	8	8	8	8
Operating frequency	Hz	47 - 63	47 - 63	47 - 63	⎓	47 - 63

Connections

~ output module

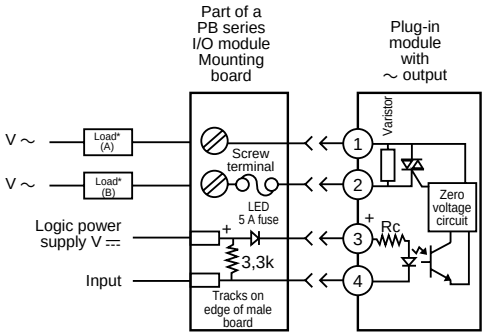

* The load may be wired on A or B.

⎓ output module

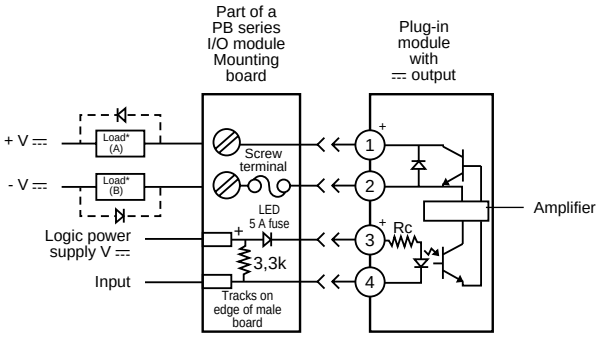

* The load may be wired on A or B. To avoid damage to the I/O module, inductive DC loads must not contain a diode.

Other information

UL approved (E46203) / CSA certified (38595)
For mounting boards, see pages 4/60 to 4/69.

Courtesy of Steven Engineering, Inc. • 230 Ryan Way, South San Francisco, CA, 94080-6370 • Main Office: (650) 588-9200 • Outside Local Area: (800) 258-9200 • www.stevenengineering.com

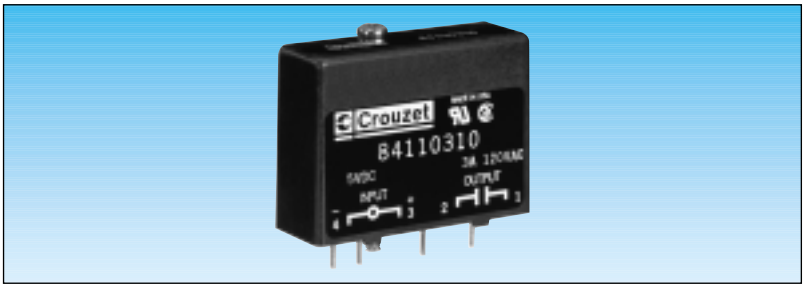

OAC24A	ODC24
84 110 331	**84 110 430**
24	24
18 - 32	18 - 32
1	1
13	13
2000	2000
240 V ~	5 - 48 V ⎓
24 - 280 V ~	3 - 60 V ⎓
600 Vpeak	60 V ⎓
6 mArms	10 µA
—	—
3.5 mArms	3 A
50 mArms	10 mA
100 Apeak	5 A
1.6	1.5
-30 +80	-30 +80
-40 +100	-40 +100
8.33	0.025
8.33	0.05
4000	4000
8	8
47 - 63	⎓

1

Dimensions

Dimensions in mm. Tolerance : ± 0.50.

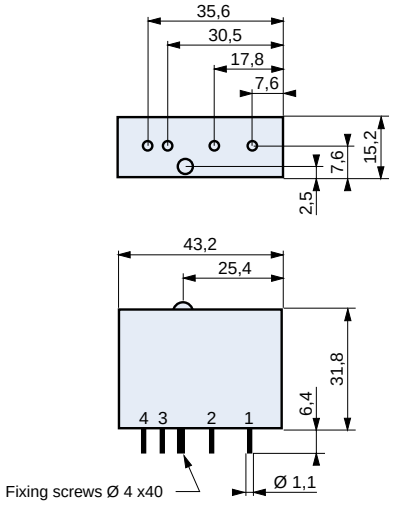

Casing colour :
~: Black
⎓: Red

4

To order, specify :

Standard products

Standard products, non stocked

1 Part number

Example : Output module - Standard range 15.24 mm - 84 110 310

Crouzet

Courtesy of Steven Engineering, Inc. • 230 Ryan Way, South San Francisco, CA, 94080-6370 • Main Office: (650) 588-9200 • Outside Local Area: (800) 258-9200 • www.stevenengineering.com

Input modules - Standard range 15.24 mm

- **Single channel plug-in module**
- **Input : 110 V ∼, 240 V ∼, 5 - 28 V ⎓, 12-48 V ⎓**
- **Open collector output : 5 V ⎓ or 24 V ⎓**
- **Standard industrial casing**

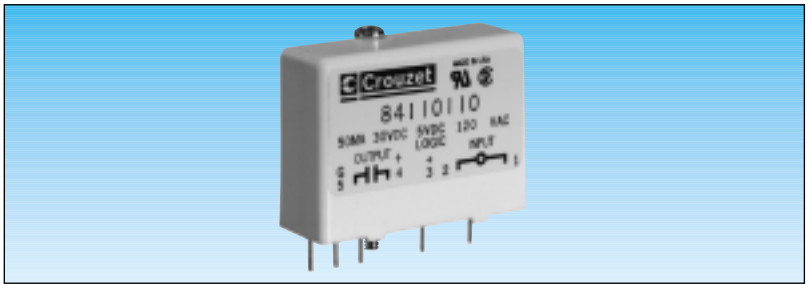

Types			IAC5	IAC5A	IAC5E	IDC5	IDC5N
Part numbers							
			84 110 110	84 110 111	84 110 112	84 110 210	84 110 212
Input characteristics (at ambient 25 °C)							
Nominal voltage			120 V ∼	240 V ∼	24 V ∼	5 - 28 V ⎓	12 - 48 V ⎓
Operating voltage range			90 - 140 V ∼	180 - 280 V ∼	18 - 36 V ∼	3.3 - 32 V ⎓	10 - 60 V ⎓
Max input resistance		kΩ	28	75	2	1	2
Max input current			5 mArms	5 mArms	10 mArms	34 mA	34 mA
Current drop			2 mArms	1.5 mArms	1 mArms	1 mA	1 mA
Current authorised when not operating			2.5 mArms	2 mArms	1.5 mArms	1.5 mA	1.5mA
Voltage authorised when not operating			50 V ∼	50 V ∼	10 V ∼	2 V ⎓	4 V ⎓
Output characteristics (at ambient 25 °C)							
Logic voltage		V ⎓	5	5	5	5	5
Logic voltage range		V ⎓	3 - 6	3 - 6	3 - 6	3 - 6	3 - 6
Max logic current		mA	16	16	16	16	16
Max I power supply output in OFF state		µA	10	10	10	10	10
Max output transistor voltage		V ⎓	30	30	30	30	30
Max output transistor current		mA	50	50	50	50	50
Max leakage current		µA	10	10	10	10	10
Residual voltage		V ⎓	0.2	0.2	0.2	0.2	0.2
General characteristics							
Temperature limits	Use	°C	-30 +80	-30 +80	-30 +80	-30 +80	-30 +80
	Stored	°C	-40 +100	-40 +100	-40 +100	-40 +100	-40 +100
Response time	Turn-on	ms	20	20	20	1	5
	Turn-off	ms	30	30	30	1	5
I/O isolation		V ∼	4000	4000	4000	4000	4000
I/O capacity (typical)		pF	8	8	8	8	8
Operating frequency		Hz	47 - 63	47 - 63	47 - 63	⎓	⎓

Connections

∼ input module

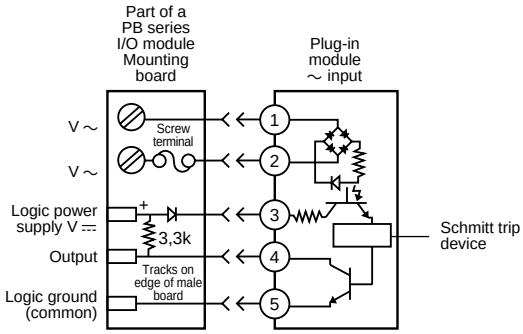

⎓ input module

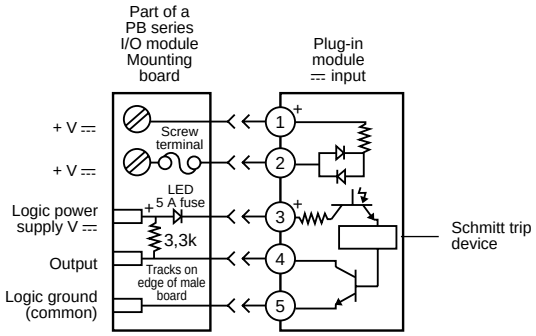

Other information

UL approved (E46203) / CSA certified (38595)
For mounting boards, see pages 4/60 to 4/69.

Courtesy of Steven Engineering, Inc. • 230 Ryan Way, South San Francisco, CA, 94080-6370 • Main Office: (650) 588-9200 • Outside Local Area: (800) 258-9200 • www.stevenengineering.com

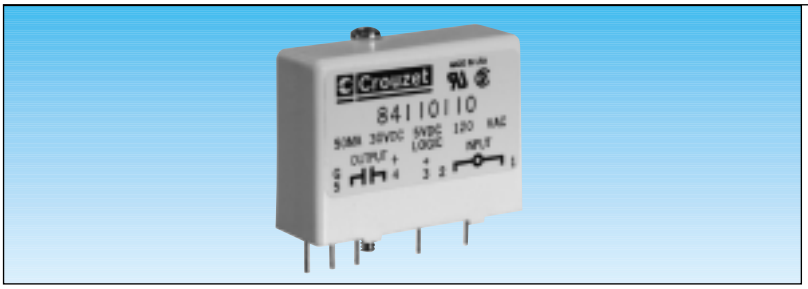

IAC24	IAC24A	IDC24	IDC24N
84 110 130	**84 110 131**	**84 110 230**	**84 110 232**
120 V ~	240 V ~	5 - 28 V ⎓	12 - 48V ⎓
90 - 140 V ~	180 - 280 V ~	3.3 - 32 V ⎓	10 - 60 V ⎓
28	75	1	2
5 mArms	5 mArms	34 mA	34 mA
2 mArms	1.5 mArms	1 mA	1 mA
2.5 mArms	2 mArms	1.5 mA	1.5 mA
50 V ~	50 V ~	2 V ⎓	4 V ⎓
24	24	24	24
20 - 30	20 - 30	20 - 30	20 - 30
16	16	16	16
10	10	10	10
30	30	30	30
50	50	50	50
10	10	10	10
0.2	0.2	0.2	0.2
-30 +80	-30 +80	-30 +80	-30 +80
-40 +100	-40 +100	-40 +100	-40 +100
20	20	1	5
30	30	1	5
4000	4000	4000	4000
8	8	8	8
47 - 63	47 - 63	⎓	⎓

1

Dimensions

Dimensions in mm. Tolerance : ± 0.50.

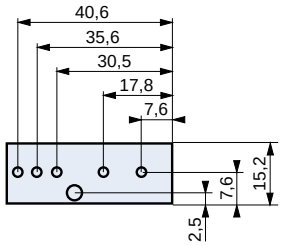

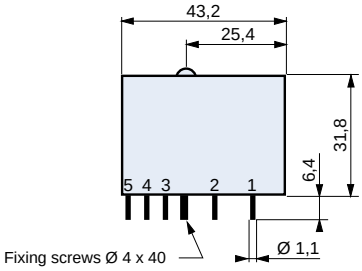

Casing colour :
~ : Yellow
⎓ : White

4

To order, specify :

Standard products

Standard products, non stocked

1 Part number

Example : Input module - Standard range 15.24 mm - 84 110 110

Crouzet

Courtesy of Steven Engineering, Inc. • 230 Ryan Way, South San Francisco, CA, 94080-6370 • Main Office: (650) 588-9200 • Outside Local Area: (800) 258-9200 • www.stevenengineering.com

Output modules - SM range

- **Single channel plug-in module**
- **Input : 5 V ⎓ or 24 V ⎓**
- **Output :110 V ∼ / 240 V ∼, 5-48 V ⎓**
- **Current : 3 to 5 A ∼ ⎓**
- **Standard industrial casing**

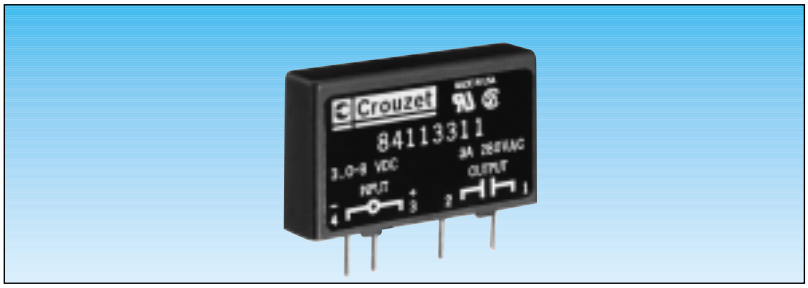

Types		SMOAC5	SMOACAH	SMOAC5A	SMOAC5AR	SMODC5
Part numbers						
		84 113 310	84 113 011	84 113 311	84 113 312	84 113 410
Input characteristics (at ambient 25 °C)						
Nominal control voltage	V ⎓	5	5	5	5	5
Control voltage range	V ⎓	2.75 - 8	2.75 - 8	2.75 - 8	2.75 - 8	2.75 - 8
Voltage drop	V ⎓	1	1	1	1	1
Operating current	mA	20	20	20	18	18
Internal resistance	Ω	220	220	220	250	250
Output characteristics (at ambient 25 °C)						
Nominal voltage		120 V ∼	240 V ∼	240 V ∼	240 V ∼	5 - 48 V ⎓
Operating voltage range		12 -140 V ∼	24 - 280 V ∼	24 - 280 V ∼	24 - 280 V ∼	3 - 60 V ⎓
Peak voltage		400 Vpeak	600 Vpeak	600 Vpeak	600 Vpeak	60 V ⎓
Max leakage current		3 mArms	6 mArms	6 mArms	6 mA	10 µA
Static dv/dt - off-state	V/µs	200	200	200	200	—
Output current		3.5 Arms	5 Arms	3.5 Arms	3.5 Arms	3 A
Holding current		50 mArms	50 mArms	50 mArms	50 mArms	10 mA
Current surge (for 1 cycle in ∼ and 1 s in ⎓)		100 Apeak	100 Apeak	100 Apeak	100 Apeak	5 A
Voltage drop - on-state	V	1.6	1.6	1.6	1.6	1.5
General characteristics						
Temperature limits — Use	°C	-30 +80	-30 +80	-30 +80	-30 +80	-30 +80
Temperature limits — Stored	°C	-40 +100	-40 +100	-40 +100	-40 +100	-40 +100
Response time — Turn-on	ms	8.33	0.1	8.33	8.33	0.1
Response time — Turn-off	ms	8.33	8.33	8.33	8.33	0.75
I/O isolation	V ∼	4000	4000	4000	4000	4000
I/O capacity (typical)	pF	8	8	8	8	8
Operating frequency	Hz	47 - 63	47 - 63	47 - 63	47 - 63	⎓

Connections

∼ output module

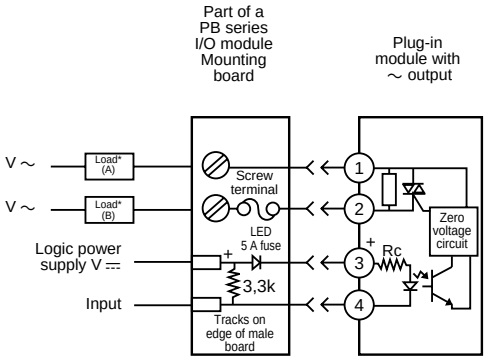

* The load may be wired on A or B.

⎓ output module

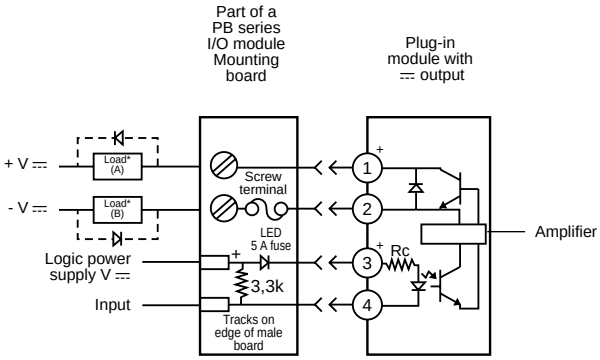

* The load may be wired on A or B. To avoid damage to the I/O module, inductive DC loads must incorporate a freewheel diode.

Other information

UL approved (E46203) / CSA certified (38595)
For mounting boards, see pages 4/74 to 4/78.

Courtesy of Steven Engineering, Inc. • 230 Ryan Way, South San Francisco, CA, 94080-6370 • Main Office: (650) 588-9200 • Outside Local Area: (800) 258-9200 • www.stevenengineering.com

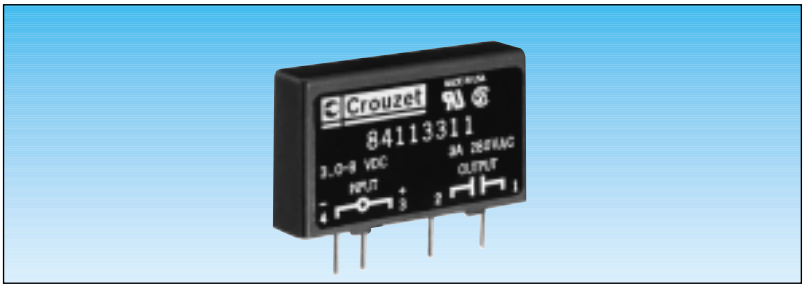

SMOAC24	SMOAC24A	SMODC24
84 113 330	**84 113 331**	**84 113 430**
24	24	24
18 - 32	18 - 32	18 - 32
1	1	1
13	13	13
2000	2000	200
120 V ~	240 V ~	5 - 48 V ⎓
12 - 140 V ~	24 - 280 V ⎓	3 - 60 V ⎓
400 Vpeak	600 Vpeak	60 V ⎓
3 mArms	6 mArms	10 µA
200	200	—
3.5 Arms	3.5 Arms	3 A
50 mArms	50 mArms	10 mA
100 Apeak	100 Apeak	5 A
1.6	1.6	1.5
-30 +80	-30 +80	-30 +80
-40 +100	-40 +100	-40 +100
8.33	8.33	0.1
8.33	8.33	0.75
4000	4000	4000
8	8	8
47 - 63	47 - 63	⎓

1

Dimensions

Dimensions in mm. Tolerance : ± 0.50.

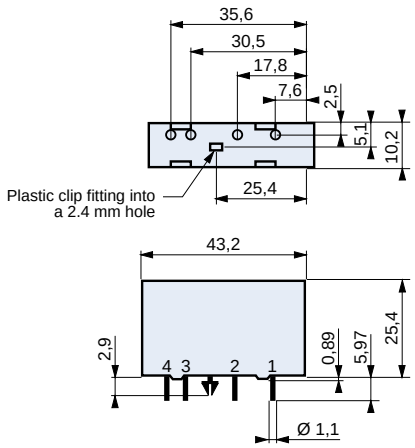

4

To order, specify :

Standard products

Standard products, non stocked

1 Part number

Example : Output module - SM range - 84 113 310

Crouzet

Input modules - SM range

- **Single channel plug-in module**
- **Input : 24 V ~ / 110 V ~ / 240 V ~**
  5-28 V ⎓ / 12-48 V ⎓
- **Output : open collector**
  5 V ⎓ or 24 V ⎓
- **Standard industrial casing**

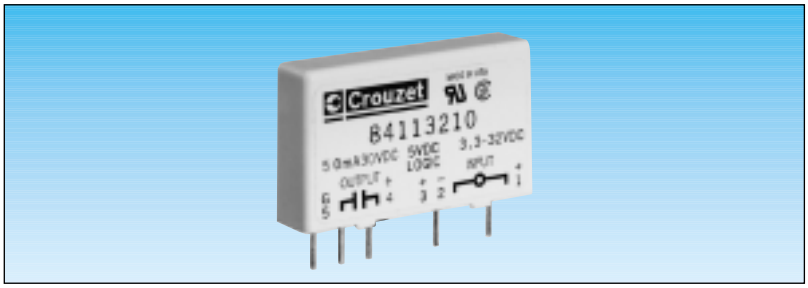

Types			SMIAC5	SMIAC5A	SMIAC5E	SMIDC5	SMIDC5N
Part numbers							
			84 113 110	**84 113 111**	**84 113 112**	**84 113 210**	**84 113 212**
Input characteristics (at ambient 25 °C)							
Nominal voltage			120V ~	240 V ~	24 V ~	5 - 28 V ⎓	12 - 48 V ⎓
Operating voltage range			90 - 140 V ~	180 -280 V ~	18 - 36 V ~	3.3 - 32 V ⎓	10 - 60 V ⎓
Max input resistance		kΩ	28	75	2	1	2
Max input current			5 mArms	5 mArms	10 mArms	34 mA	34 mA
Current drop			2 mArms	1.5 mArms	1 mArms	1 mA	1 mA
Current authorised when not operating			2.5 mArms	2 mArms	1.5 mArms	1.5 mA	1.5 mA
Voltage authorised when not operating			50 V ~	50 V ~	10 V ~	2 V ⎓	4 V ⎓
Output characteristics (at ambient 25 °C)							
Logic voltage		V ⎓	5	5	5	5	5
Logic voltage range		V ⎓	3 - 6	3 - 6	3 - 6	3 - 6	3 - 6
Logic current		mA	16	16	16	16	16
Max I power supply output in OFF state		µA	10	10	10	10	10
Max output transistor voltage		V ⎓	30	30	30	30	30
Max output transistor current		mA	50	50	50	50	50
Max leakage current		µA	10	10	10	10	10
Residual voltage		V ⎓	0.2	0.2	0.2	0.2	0.2
General characteristics							
Temperature	Use	°C	-30 +80	-30 +80	-30 +80	-30 +80	-30 +80
limits	Stored	°C	-40 +100	-40 +100	-40 +100	-40 +100	-40 +100
Response time	Turn-on	ms	20	20	20	1	5
	Turn-off	ms	30	30	30	1	5
I/O isolation		V ~	4000	4000	4000	4000	4000
I/O capacity (typical)		pF	8	8	8	8	8
Operating frequency		Hz	47 - 63	47 - 63	47 - 63	⎓	⎓

Connections

~ input module

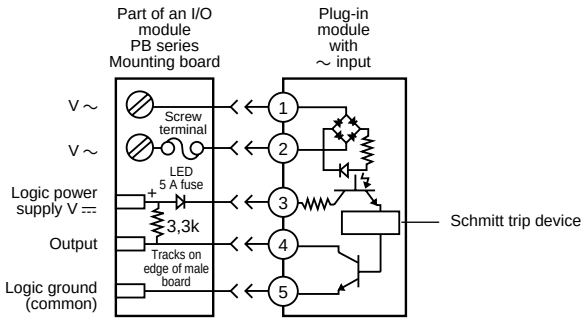

⎓ input module

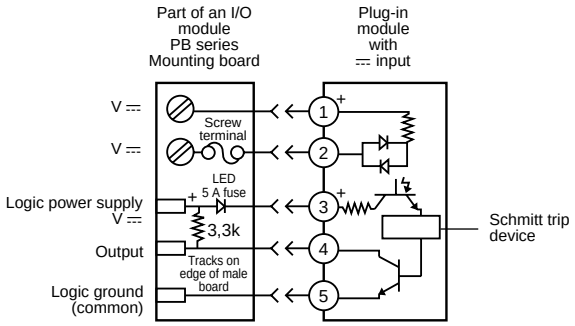

Other information

UL approved (E46203) / CSA certified (38595)
For mounting boards, see pages 4/74 to 4/78.

Courtesy of Steven Engineering, Inc. • 230 Ryan Way, South San Francisco, CA, 94080-6370 • Main Office: (650) 588-9200 • Outside Local Area: (800) 258-9200 • www.stevenengineering.com

Courtesy of Steven Engineering, Inc. • 230 Ryan Way, South San Francisco, CA, 94080-6370 • Main Office: (650) 588-9200 • Outside Local Area: (800) 258-9200 • www.stevenengineering.com

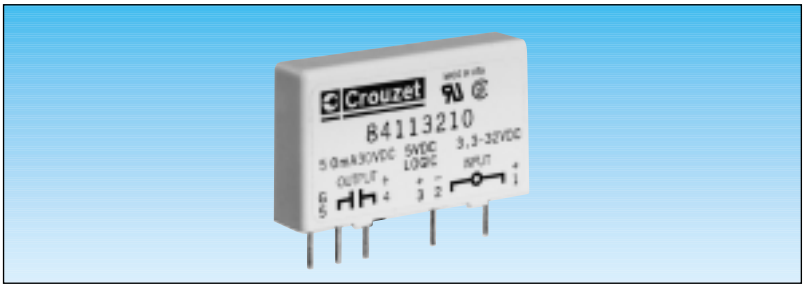

SMIAC24	SMIAC24A	SMIDC24
84 113 130	**84 113 131**	**84 113 230**
120 V ~	240 V ~	5 - 28 V ⎓
90 - 140 V ~	180 - 280 V ~	3.3 - 32 V ⎓
28	75	1
5 mArms	5 mArms	34 mA
2 mArms	1.5 mArms	1 mA
2.5 mArms	2 mArms	1.5 mA
50 V ~	50 V ~	2 V ⎓
24	24	24
20 - 30	20 - 30	20 - 30
16	16	16
10	10	10
30	30	30
50	50	50
10	10	10
0.2	0.2	0.2
-30 +80	-30 +80	-30 +80
-40 +100	-40 +100	-40 +100
20	20	1
30	30	1
4000	4000	4000
8	8	8
47 - 63	47 - 63	⎓

1

Dimensions

Dimensions in mm. Tolerance : ± 0.50.

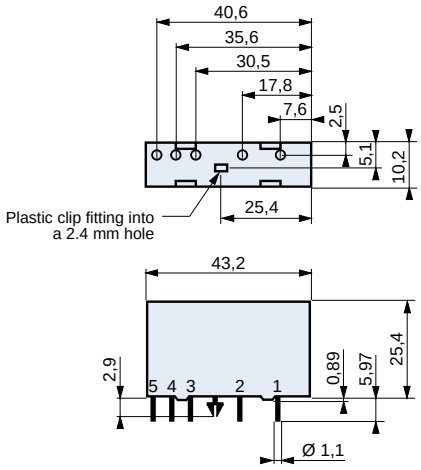

Casing colour :
~ : Yellow
⎓ : White

4

To order, specify :

1 Part number

Example : Input module - SM range - 84 113 110

Standard products, non stocked

Crouzet

Input modules - C4 range

- **New industrial standard**
- **Status display LED**
- **Single channel plug-in module**
- **Input : 110 V ∼ or 240 V ∼**
  10-32 V ⎓ or 4-16 V ⎓
- **Regulated output : 4.5 to 30 V ⎓**

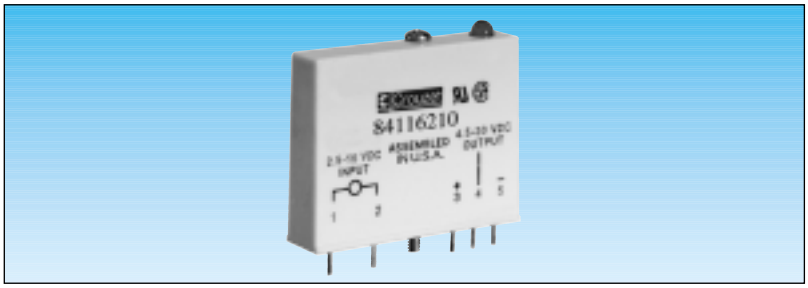

Types		C4IAC	C4IACA	C4IDC	C4IDCB
Part numbers					
		84 116 110	84 116 111	84 116 210	84 116 211
Input characteristics (at ambient 25 °C)					
Nominal control voltage		120 V ∼	240 V ∼	10 - 32 V ⎓	4 - 16 V ⎓
Operating voltage range		90 - 140 V ∼	140 - 280 V ∼	10 - 32 V ⎓	4 - 16 V ⎓
Max input resistance		22 kΩ	75 kΩ	2 kΩ	400 Ω
Max input current	mA	14	5	20	40
Current drop	mA	3	1	1.5	1
Min turn-on current	mA	2.5	0.7	1	0.7
Min turn-on voltage		50 V ∼	50 V ∼	3 V ⎓	1 V ∼
Output characteristics (at ambient 25 °C)					
Logic voltage	V ⎓	4.5 - 30	4.5 - 30	4.5 - 30	4.5 - 30
Logic voltage range	V ⎓	4.5 - 30	4.5 - 30	4.5 - 30	4.5 - 30
Max logic current	mA	25	25	25	25
Max I power supply output in OFF state	µA	7	7	7	7
Max output transistor current	mA	50	50	50	50
Max leakage current	µA	10	10	10	10
Residual voltage	V ⎓	0.2	0.2	0.2	0.2
General characteristics					
Temperature limits — Use	°C	-30 +80	-30 +80	-30 +80	-30 +80
Temperature limits — Stored	°C	-40 +100	-40 +100	-40 +100	-40 +100
Response time — Turn-on	ms	20	20	5	0.05
Response time — Turn-off	ms	20	20	5	0.1
I/O isolation	V ∼	4000	4000	4000	4000
Operating frequency	Hz	47 - 63	47 - 63	---	---

Wiring diagram

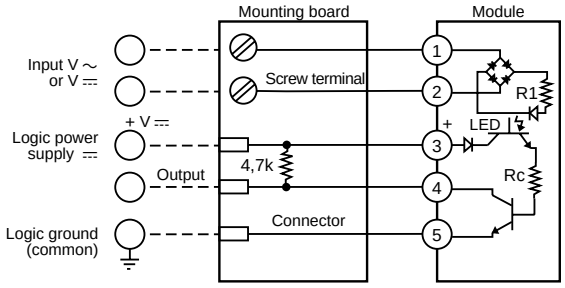

Dimensions

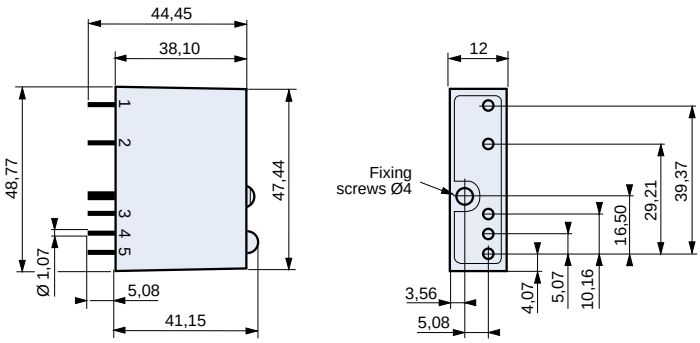

Other information	To order, specify :
UL approved (E46203) / CSA certified (38595) For mounting boards, see pages 4/79 to 4/83.	**Standard products** 1 Part number Example : Input module - C4 range - 84 116 110

Courtesy of Steven Engineering, Inc. • 230 Ryan Way, South San Francisco, CA, 94080-6370 • Main Office: (650) 588-9200 • Outside Local Area: (800) 258-9200 • www.stevenengineering.com

Courtesy of Steven Engineering, Inc. • 230 Ryan Way, South San Francisco, CA, 94080-6370 • Main Office: (650) 588-9200 • Outside Local Area: (800) 258-9200 • www.stevenengineering.com

Output modules - C4 range

- **New industrial standard**
- **Status display LED**
- **Single channel plug-in module**
- **Replaceable protective fuse**
- **Regulated input : 4 to 32 V ⎓**
- **Output : 110 V ∼ or 220 V ∼**
  5-48 V ⎓
- **Current : 3 A**

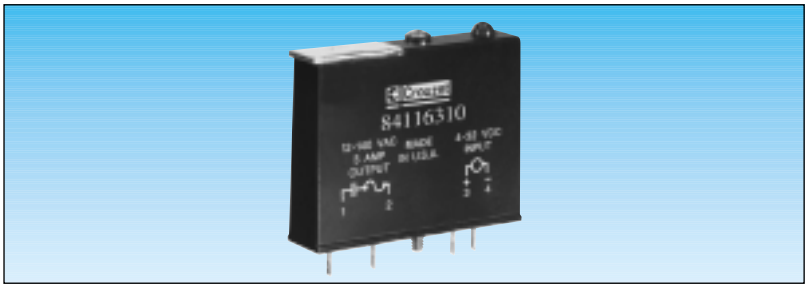

Types			C4OAC	C4OACA	C4ODC
Part numbers					
			84 116 310	84 116 311	84 116 410
Input characteristics					
Nominal control voltage		V ⎓	4 - 32	4 - 32	4 - 32
Voltage drop		V ⎓	1	1	1
Maximum current		mA	22	22	16
Input resistance			Regulated input	Regulated input	Regulated input
Output characteristics					
Nominal voltage			120 V ∼	240 V ∼	5 - 48 V ⎓
Operating voltage range			12 - 140 V ∼	24 - 280 V ∼	5 - 60 V ⎓
Peak voltage			600 V	600 V	60 V ⎓
Max leakage current			2 mA	4 mA	10 µA
dv/dt		V/µs	200	200	—
Output current			3 Arms	3 Arms	3 A
Holding current			50 mArms	50 mArms	10 mA
Current surge (for 1 cycle in ∼ and 1 s in ⎓)			100 Apeak	100 Apeak	5 A
Voltage drop - on-state		V	1.6	1.6	1.6
General characteristics					
Temperature limits	Use	°C	-30 +80	-30 +80	-30 +80
	Stored	°C	-40 +100	-40 +100	-40 +100
Response time	Turn-on	ms	8.33	8.33	0.05
	Turn-off	ms	8.33	8.33	0.05
I/O isolation		V ∼	4000	4000	4000
I/O capacity (typical)		pF	8	8	8
Operating frequency		Hz	47 - 63	47 - 63	⎓

Wiring diagrams

∼ output module

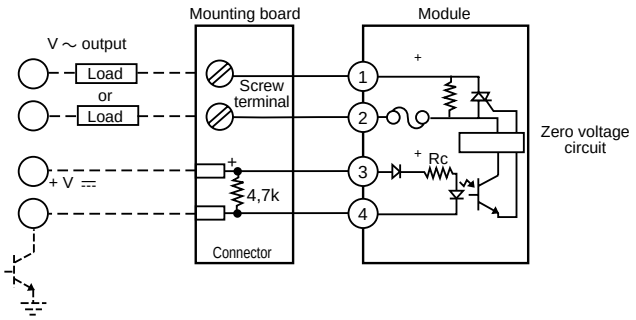

⎓ output module

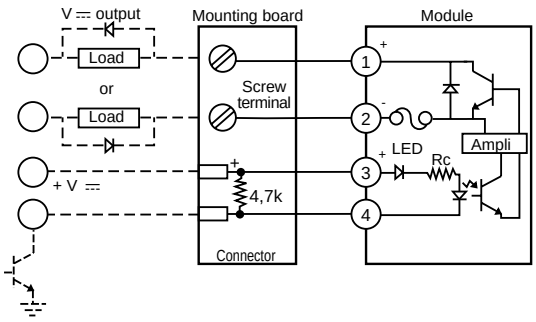

Dimensions

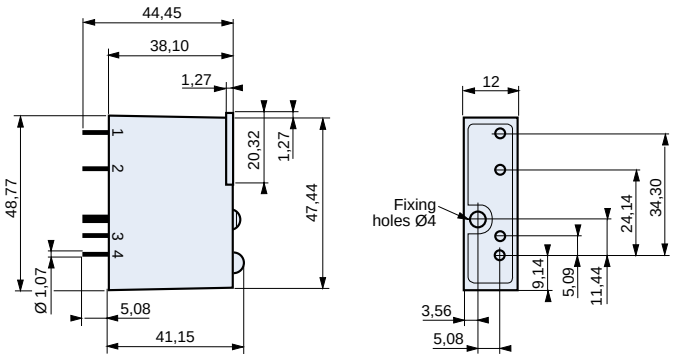

Other information	To order, specify :
UL approved (E46203) / CSA certified (38595) For mounting boards, see pages 4/79 to 4/83.	**Standard products** 1 Part number Example : Output module - C4 range - 84 116 311

Crouzet

Courtesy of Steven Engineering, Inc. • 230 Ryan Way, South San Francisco, CA, 94080-6370 • Main Office: (650) 588-9200 • Outside Local Area: (800) 258-9200 • www.stevenengineering.com

Input modules - Quad-Pack range

- **4-channel plug-in module**
- **Status display LED**
- **Input : 24 V ~ / 110 V ~ / 240 V ~**
  12 to 48 V ⎓
  5 to 28 V ⎓
- **Output : 5 V ⎓**
- **Standard industrial casing**

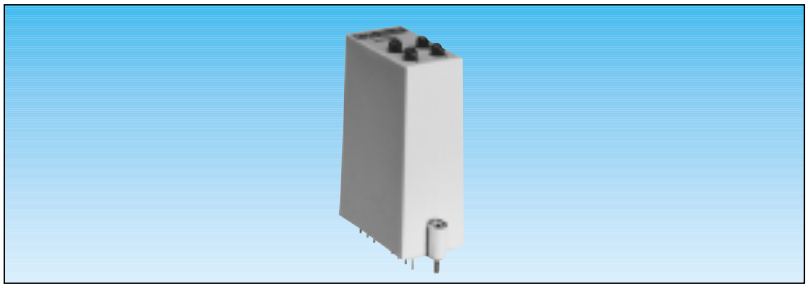

Types		IAC5Q	IAC5AQ	IAC5EQ	IDC5Q	IDC5BQ
Part numbers						
		84 112 110	**84 112 111**	**84 112 112**	**84 112 210**	**84 112 214**
Input characteristics (at ambient 25 °C)						
Nominal voltage		120 V ~	240 V ~	24 V ~	12 - 48 V ⎓	5 - 28 V ⎓
Operating voltage range		90 - 140 V ~	180 -280 V ~	18 - 36 V ~	10 - 60 V ⎓	4 - 32 V ⎓
Max input resistance	Ω	28	75	2	2	0.5
Max input current		5 mArms	5 mArms	10 mArms	34 mA	68 mA
Current drop		2 mArms	1.5 mArms	1 mArms	1 mA	1 mA
Current authorised when not operating		2.5 mArms	2 mArms	1.5 mArms	1.5 mA	1.5 mA
Voltage authorised when not operating		50 V ~	50 V ~	10 V ~	4 V ~	2 V ~
Output characteristics (at ambient 25 °C)						
Logic voltage	V ⎓	5	5	5	5	5
Logic voltage range	V ⎓	3 - 6	3 - 6	3 - 6	3 - 6	3 - 6
Max logic current	mA	16	16	16	16	16
Max I power supply output in OFF state	µA	10	10	10	10	10
Max output transistor voltage	V ⎓	30	30	30	30	30
Max output transistor current	mA	50	50	50	50	50
Max leakage current	µA	10	10	10	10	10
Residual voltage	V ⎓	0.2	0.2	0.2	0.2	0.2
General characteristics						
Temperature limits – Use	°C	-30 +80	-30 +80	-30 +80	-30 +80	-30 +80
Temperature limits – Stored	°C	-40 +100	-40 +100	-40 +100	-40 +100	-40 +100
Response time – Turn-on	ms	20	20	20	5	0.05
Response time – Turn-off	ms	30	30	30	5	0.1
I/O isolation	V ~	4000	4000	4000	4000	4000
I/O capacity (typical)	pF	8	8	8	8	8
Operating frequency	Hz	47 - 63	47 - 63	47 - 63	⎓	⎓

Connections

84 112 110 - 111 - 112

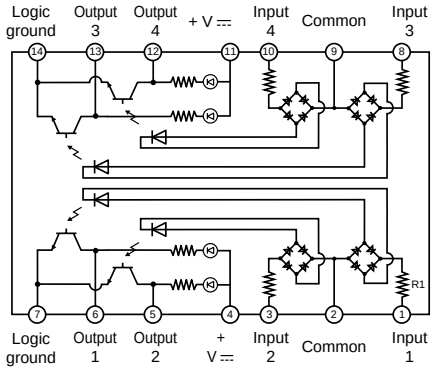

84 112 210 / 214

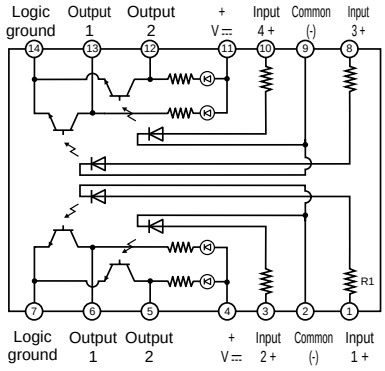

Dimensions

Dimensions in mm.
Tolerance : ± 0.50

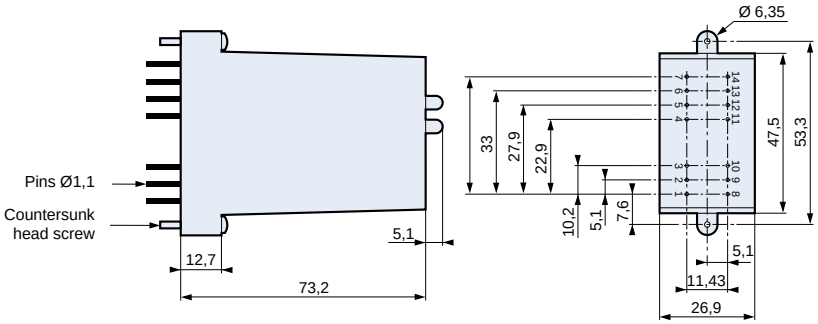

Casing colour :
~ : Yellow
⎓ : White

Other information	To order, specify :
UL approved (E46203) / CSA certified (38595) For mounting boards, see pages 4/84 to 4/89.	**Standard products** **Standard products, non stocked** 1 Part number Example : Input module - Quad-Pack range - 84 112 110

Solid state relays 17.5 mm for DIN rail mounting - GMS range

- **Complete, compact units**
- **DIN rail and panel mounting**
- **Rating: 5 A ∼ or 3 A ⎓**
- **Output voltage 12-280 V ∼ or 5-48 V ⎓**
- **Input voltage 4-32 V ⎓ regulated**
- **Input to output insulation voltage: 4 kV**
- **LED display of input status**
- **Replaceable protection fuse**
- **UL - cUL approval and CE marking**

Output specifications	Triac	Transistor
Voltage range (Vrms max)	**12-280 ∼**	**5-48 ⎓**
Peak voltage (t=1 min.) (V peak)	600 ∼	60 ⎓
Maximum off-state leakage (at Vmax and T = 25 °C)	2 mArms	10 µA
Maximum current (Arms)	5	3
Minimum current (mArms)	50	10
Max. 1-cycle surge T=25°C (V peak)	100	5
On-state voltage drop at Imax and T=25°C (V peak)	1.6	1.6
I^2t (t = 10 ms) (A^2s)	600	-
Static (off-state) dv/dt (V/µs)	200	n/a
Rth junction/ambient air	20.3° C/W	22.6° C/W

Input specifications		
Input voltage (V)	**4-32 ⎓**	**4-32 ⎓**
Drop-out voltage	1V ⎓	1V ⎓
Maximum current (at Vmax)	22	16
Nominal input resistance	Regulated input	
Response time (close)	< 10 ms	50 µs
Response time (open)	< 10 ms	50 µs

Characteristics		
Operating temperature (° C)	-30 to +80	
Storage temperature (° C)	-40 to +100	
Input to output insulation voltage (Vrms)	4000	
Input/output capacitance (pF)	8	
Replaceable protection fuse	Yes	Yes
LED display of input status of input status	Yes	Yes
Capacity of input and output terminals	with ferrule : 2 x 1.5 mm² without ferrule : 2 x 2.5 mm² 1 x 4 mm²	

For replacement fuses, see page 4/32

Part numbers

1

Zero voltage switching (output ∼)

Rating	Output	Input	
3 A	5-48 V ⎓	4-32 V ⎓	**84 130 104**
5 A	12-280 V ∼	4-32 V ⎓	**84 130 105**

Instantaneous switching

Rating	Output	Input	
5 A	12-280 V ∼	4-32 V ⎓	**84 130 108**

Equivalent circuits

output ∼

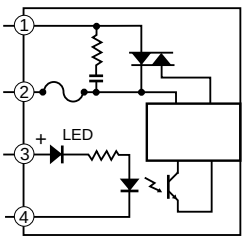

output ⎓

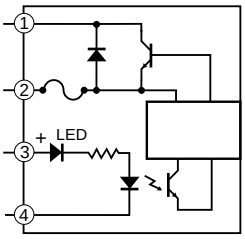

Curves for temperature-dependent derating

output ∼

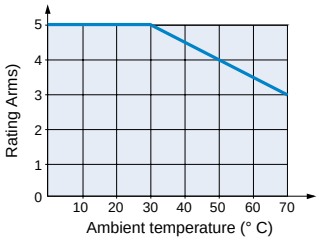

output ⎓

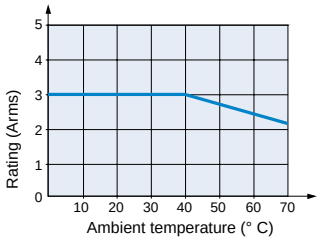

Dimensions

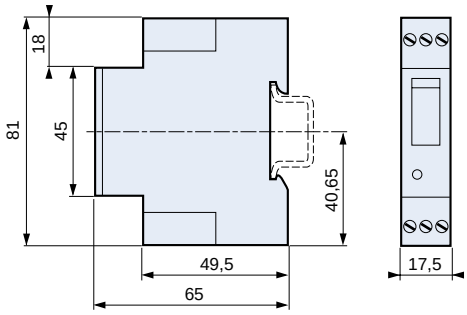

To order, specify :

Standard products

1 Part number

Example: Solid state relay - GMS range - 84 130 104

Courtesy of Steven Engineering, Inc. • 230 Ryan Way, South San Francisco, CA, 94080-6370 • Main Office: (650) 588-9200 • Outside Local Area: (800) 258-9200 • www.stevenengineering.com

Solid state relays with integrated heatsink, DIN rail mounting - GRD range 22.5mm

- **Single phase**
- **Complete, compact units**
- **Tailor-made solution to current sinks**
- **DIN rail and panel mounting**
- **Rating: 12 and 25 A (Triac) - 25 A (SCR)**
- **Protection by RC filter**
- **Optional protection by removable varistor**
- **LED display of input status**
- **UL - cUL approval and CE marking**

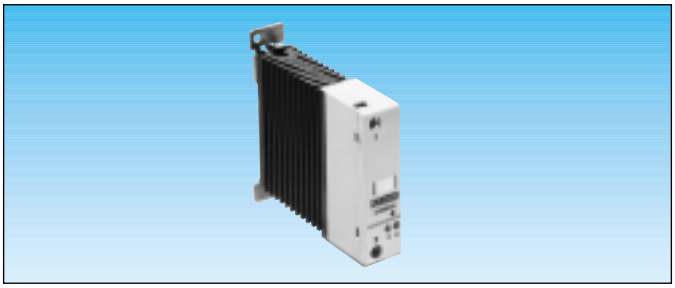

Output specifications

	Triac	SCR
Voltage range (Vrms max)	**24-280**	**48-660**
Peak voltage (t=1 min.) (Vpeak)	600	1200
Maximum current (A)	12 - 25	25
Maximum off-state leakage (at Vmax and T = 25 °C)	15	20
Minimum current (mArms)	50	100
Max. 1-cycle surge T=25°C (A peak)	100 - 250	750
Max. 1-second surge T=25°C (A peak)	30 - 75	145
On-state voltage drop at Imax and T=25°C (Vpeak)	1.6	1.6
I^2t (t=10ms) A^2s)	312 - 750	1250
Static (off-state) dv/dt (Vµs)	200	500
Supply frequency range (Hz)	47 to 80	47 to 80
cos φ (Zero voltage)	> 0.5	> 0.5
Rth junction/ambient air	4.9 - 3.6° C/W	2.5° C/W

Input specifications

Input voltage (V)	**90-280 ∼ ⎓**	**4-32 ⎓**
Drop-out voltage	10 Vrms	1V ⎓
Maximum current (at Vmax)	5.5 mArms	12 mA
Nominal input resistance	45 kΩ	3 kΩ
Response time (close)	20 ms	0.5 cycle max.
Response time (open)	30 ms	0.5 cycle max.

For instantaneous switching models, turn-on time is less than 100 µs

Characteristics

Operating temperature (° C)		-20 to +80
Storage temperature (° C)		-40 to +100
Input to output insulation voltage (Vrms)		4000
Breakdown voltage (Vrms)		2500
Input/output capacitance (pF)		8
Material	Casing	Self-extinguishing (UL 94 V0)
	Baseplate	Aluminium
Weight (g)		250
Terminal capacity		Ø 2 mm max.

Dimensions

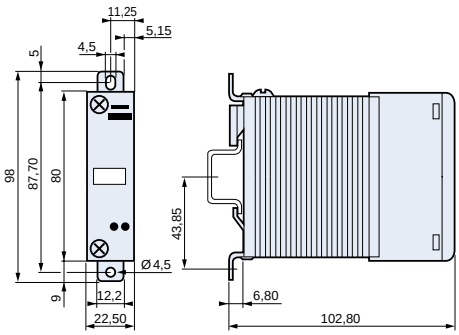

Part numbers

1

Zero voltage switching

Rating	Output voltage	Input voltage	Triac	SCR
12 A	24-280 V ∼	180-280 V ∼ ⎓	**84 130 100**	
		4-32 V ⎓	**84 130 101**	
		90-140 V ∼	**84 130 150**	
25 A	24-280 V ∼	180-280 V ∼ ⎓	**84 130 102**	
		4-32 V ⎓	**84 130 103**	
		90-140 V ∼	**84 130 152**	
25 A	48-660 V ∼	180-280 V ∼ ⎓		**84 130 118**
		4-32 V ⎓		**84 130 116**
		90-140 V ∼		**84 130 158**

Instantaneous switching

Rating	Output voltage	Input voltage	SCR
25 A	48-660 V ∼	4-32 V ⎓	**84 130 117**

Thermal dissipation curves

GRD range - single-phase with triac

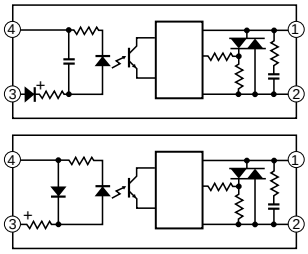

GRD range - single-phase with SCR

Zero voltage switching

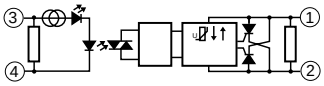

Instantaneous switching

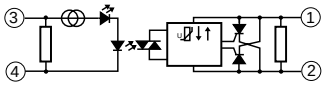

Curves for temperature-dependent derating

GRD range 22.5 mm - 12 A (Triac)

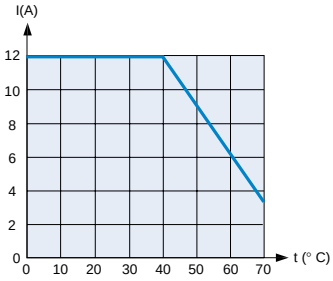

GRD range 22.5 mm - 25 A (Triac)

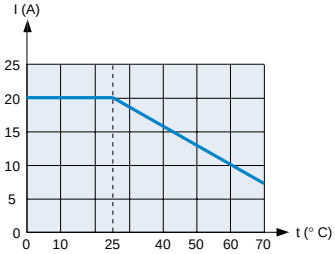

25 A (SCR)

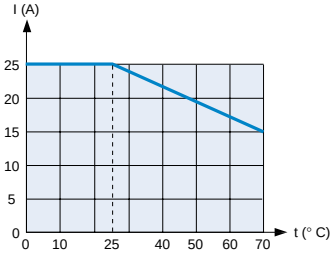

To order, specify :

Standard products

Standard products, non stocked

1 Part number

Example: Solid state relay GMS range 22.5 mm - 84 130 100

4

Crouzet

Courtesy of Steven Engineering, Inc. • 230 Ryan Way, South San Francisco, CA, 94080-6370 • Main Office: (650) 588-9200 • Outside Local Area: (800) 258-9200 • www.stevenengineering.com

Courtesy of Steven Engineering, Inc. • 230 Ryan Way, South San Francisco, CA, 94080-6370 • Main Office: (650) 588-9200 • Outside Local Area: (800) 258-9200 • www.stevenengineering.com

Solid state relays with integrated heatsink, DIN rail mounting - GRD range 90 mm

- **Three-phase**
- **Complete, compact units**
- **Tailor-made solution to current sinks**
- **DIN rail and panel mounting**
- **Rating: 3 x 25 A**
- **Back-to-back SCRs**
- **Protection by RC filter**
- **Optional protection by removable varistor**
- **LED display of input status**
- **UL - cUL approval and CE marking**

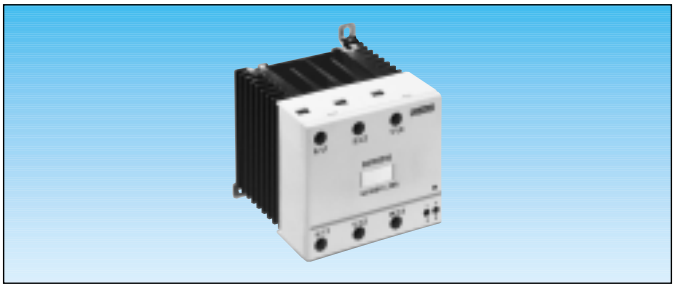

Output specifications

	SCR
Voltage range (Vrms max)	**48-660**
Peak voltage (t=1 min.) (Vpeak)	1200
Maximum current (A)	3 x 25
Maximum off-state leakage (mA) at Vmax and T = 25 °C	20 per phase
Minimum current (mArms)	100 per phase
Max. 1-cycle surge T=25°C (A peak)	500
Max. 1-second surge T=25°C (A peak)	145
On-state voltage drop at Imax and T=25°C (Vpeak)	1.6
I2t (t=10ms) A2s	1260
Static (off-state) dv/dt (Vµs)	500
Supply frequency range (Hz)	47 to 80
cos φ (Zero voltage)	> 0.5
Rth junction/ ambient air	1° C/W

Input specifications

Input voltage (V)	**90-280 ∼ ⎓**	**4-32 ⎓**
Drop-out voltage	10 Vrms	1V ⎓
Maximum current (at Vmax)	10 mArms	10 mA
Nominal input resistance (kΩ)	45	3
Response time (close)	20 ms	0.5 cycle max.
Response time (open)	30 ms	0.5 cycle max.

For instantaneous switching models, turn-on time is less than 100 µs

Characteristics

Operating temperature (°C)		-20 to +80
Storage temperature (°C)		-40 to +100
Input to output insulation voltage (Vrms)		4000
Breakdown voltage (Vrms)		2500
Input/output capacitance (pF)		8
Material	Casing	Self-extinguishing (UL 94 V0)
	Baseplate	Aluminium
Weight (g)		940

Part numbers

1

Zero voltage switching

Rating	Output voltage	Input voltage	SCR
3 x 25 A	48-660 V ∼	90-280 V ∼ ⎓	84 130 311
		4-32 V ⎓	84 130 310

Instantaneous switching

Rating	Output voltage	Input voltage	SCR
3 x 25 A	48-660 V ∼	4-32 V ⎓	**84 130 312**

Thermal dissipation curves

GRD range - three-phase with SCR

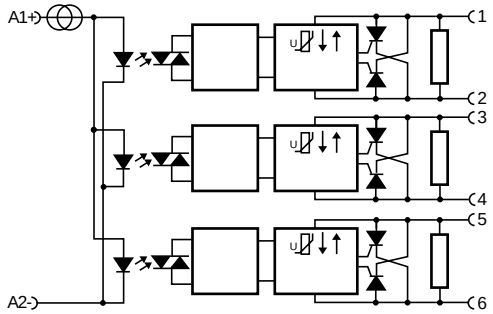

Curves for temperature-dependent derating

GRD range 90 mm - 3 x 20 A

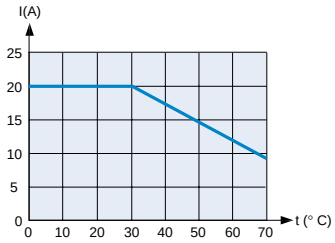

4

Dimensions

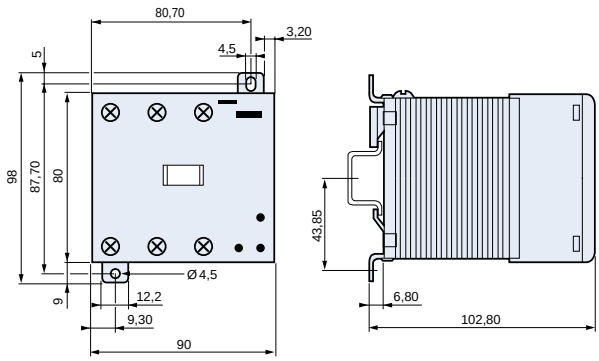

To order, specify :

Standard products

Standard products, non stocked

1 Part number
Example: Solid state relay - GRD range 90 mm - 84 130 311

Crouzet

Solid state relays with integrated heatsink, DIN rail mounting - GRD range 45 mm

- **Single phase**
- **Complete, compact units**
- **Tailor-made solution to current sinks**
- **DIN rail and panel mounting**
- **Rating: 35 and 45 A**
- **Back-to-back SCRs**
- **Protection by RC filter**
- **Optional protection by removable varistor**
- **LED display of input status**
- **UL - cUL approval and CE marking**

Output specifications

	SCR	
Voltage range (Vrms max)	**48-660**	
Peak voltage (t=1 min.) (Vpeak)	1000 (1)	
Maximum current (A)	35	45
Maximum off-state leakage at Vmax and T = 25 °C (mArms)	4	
Minimum current (mArms)	100	
Max. 1-cycle surge T=25°C (A peak)	750	
Max. 1-second surge T=25°C (A peak)	145	
On-state voltage drop at Imax and T=25°C (Vpeak)	1.6	
I2t (t=10ms) A2s	1260	5000
Static (off-state) dv/dt (Vµs)	500	
Supply frequency range (Hz)	47 to 80	
cos φ (Zero voltage)	> 0.5	
Rth junction /ambient air	3.78° C/W	1.65° C/W

Input specifications

Input voltage (V)	**90-280 ∼ ⎓**	**4-32 ⎓**
Drop-out voltage	10 Vrms	1V ⎓
Maximum current (at Vmax)	10 mArms	12 mA
Nominal input resistance	45	3
Response time (close)	20 ms	0.5 cycle max.
Response time (open)	30 ms	0.5 cycle max.

For instantaneous switching models, turn-on time is less than 100 µs

Characteristics

Operating temperature (° C)		-20 to +80
Storage temperature (° C)		-40 to +100
Input to output insulation voltage (Vrms)		4000
Breakdown voltage (Vrms)		2500
Input/output capacitance (pF)		8
Material	Casing	Self-extinguishing (UL 94 V0)
	Baseplate	Aluminium
Weight (g)		490
Input terminal capacity		Ø 2 mm max.
Output terminal capacity		Ø 5.6 mm max.

(1) Peak voltage 1200V, relay protected to 1100V ± 10%

Part numbers

1

Zero voltage switching

Rating	Output voltage	Input voltage	SCR
35 A	48-660 V ∼	90-280 V ∼ ⎓	84 130 110
		4-32 V ⎓	84 130 111
45 A	48-660 V ∼	90-280 V ∼ ⎓	84 130 115
		4-32 V ⎓	84 130 113

Instantaneous switching

Rating	Output voltage	Input voltage	SCR
35 A	48-660 V ∼	4-32 V ⎓	**84 130 112**
45 A	48-660 V ∼	4-32 V ⎓	**84 130 114**

Thermal dissipation curves

GRD range - single-phase with SCR

Zero voltage switching

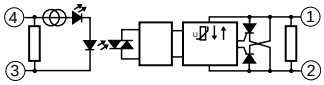

Instantaneous switching

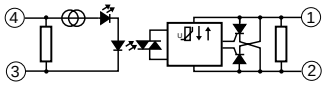

Curves for temperature-dependent derating

GRD range 45 mm - 35 A

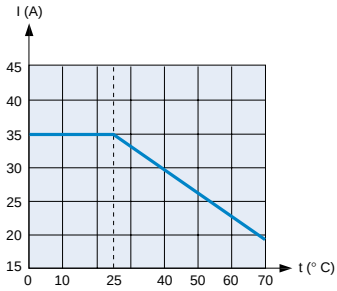

GRD range 45 mm - 45 A

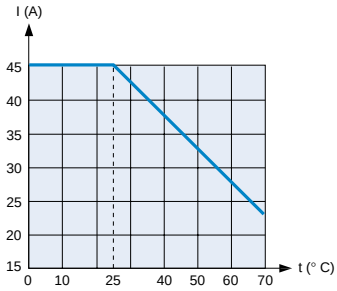

Dimensions

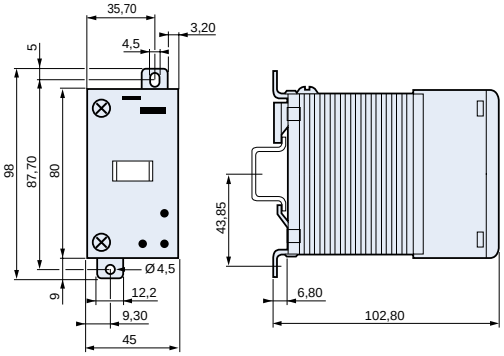

To order, specify :

Standard products

Standard products, non stocked

1 Part number

Example: Solid state relay - GRD range 45 mm - 84 130 110

Courtesy of Steven Engineering, Inc. • 230 Ryan Way, South San Francisco, CA, 94080-6370 • Main Office: (650) 588-9200 • Outside Local Area: (800) 258-9200 • www.stevenengineering.com

4

Solid state relays with integrated heatsink, DIN rail mounting - GRD range 90 mm

- **Two-phase**
- **Complete, compact units**
- **Tailor-made solution to current sinks**
- **DIN rail and panel mounting**
- **Rating: 2 x 25 A**
- **Back-to-back SCRs**
- **Protection by RC filter**
- **Optional protection by removable varistor**
- **LED display of input status**
- **UL - cUL approval and CE marking**

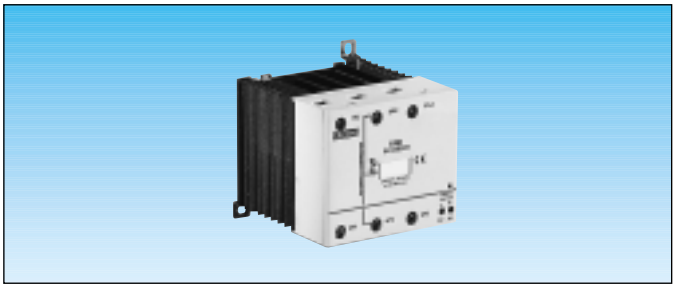

Output specifications

	SCR
Voltage range (Vrms max)	**48-660**
Peak voltage (t=1 min.) (Vpeak)	1200
Maximum current (A)	3 x 25
Maximum off-state leakage (mA) at Vmax and T = 25 °C	20 per phase
Minimum current (mArms)	100 per phase
Max. 1-cycle surge T=25°C (A peak)	500
Max. 1-second surge T=25°C (A peak)	135
On-state voltage drop at Imax and T=25°C (Vpeak)	1.6
I2t (t=10ms) A2s	1260
Static (off-state) dv/dt (Vµs)	500
Supply frequency range (Hz)	47 to 80
cos φ (Zero voltage)	> 0.5
Rth junction/ambient air	1° C/W

Input specifications

Input voltage (V)	**90-280 ∼ ⎓**	**4-32 ⎓**
Drop-out voltage	10 Vrms	1V ⎓
Maximum current (at Vmax)	10 mArms	10 mA
Nominal input resistance (kΩ)	45	3
Response time (close)	20 ms	0.5 cycle max.
Response time (open)	30 ms	0.5 cycle max.

For instantaneous switching models, turn-on time is less than 100 µs

Characteristics

Operating temperature (°C)		-20 to +80
Storage temperature (°C)		-40 to +100
Input to output insulation voltage (Vrms)		4000
Breakdown voltage (Vrms)		2500
Input/output capacitance (pF)		8
Material	Casing	Self-extinguishing (UL 94 V0)
	Baseplate	Aluminium
Weight (g)		940

Part numbers

1

Zero voltage switching

Rating	Output voltage	Input voltage	SCR
2 x 35 A	48-660 V ∼	90-280 V ∼ ⎓	84 130 322
		4-32 V ⎓	84 130 320

Instantaneous switching

Rating	Output voltage	Input voltage	SCR
2 x 35 A	48-660 V ∼	4-32 V ⎓	84 130 321

Curves for temperature-dependent derating

GRD range 90 mm - 2 x 25 A

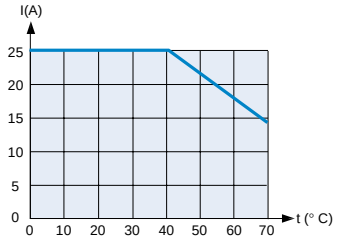

Dimensions

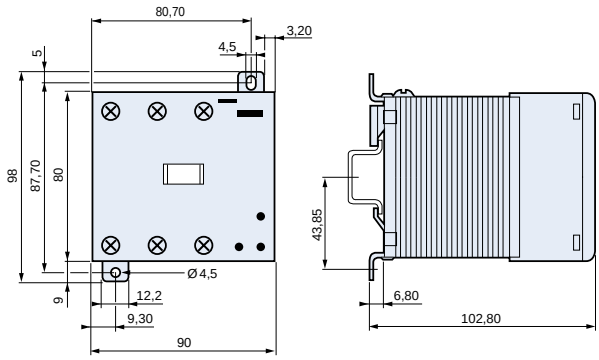

To order, specify:

Standard products

1 Part number

Example: Solid state relay - GRD range - 84 130 222

Courtesy of Steven Engineering, Inc. • 230 Ryan Way, South San Francisco, CA, 94080-6370 • Main Office: (650) 588-9200 • Outside Local Area: (800) 258-9200 • www.stevenengineering.com

4

Courtesy of Steven Engineering, Inc. • 230 Ryan Way, South San Francisco, CA, 94080-6370 • Main Office: (650) 588-9200 • Outside Local Area: (800) 258-9200 • www.stevenengineering.com

GN single phase solid state relays

- Currents from 10 to 125 A
- Output voltage from 24 to 660 VAC
- Optimum thermal response
- Regulated AC and DC control input
- Control status LED
- Available with or without protective cover

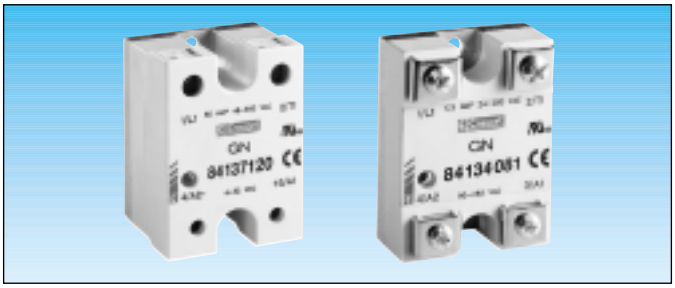

Part numbers

1

Current	Output voltage	Input voltage	Zero voltage switching with cover	Zero voltage switching without cover	Instantaneous switching with cover	Instantaneous switching without cover
10A	24-280VAC	4-32VDC	84 137 000	84 134 000	84 137 200	84 134 200
		18-36VAC/DC	84 137 002	84 134 002	84 137 202	84 134 202
		90-280VAC/DC	84 137 001	84 134 001	84 137 201	84 134 201
10A	48-660VAC	4-32VDC	84 137 100	84 134 100	84 137 300	84 134 300
		18-36VAC/DC	84 137 102	84 134 102	84 137 302	84 134 302
		90-280VAC/DC	84 137 101	84 134 101	84 137 301	84 134 301
25A	24-280VAC	4-32VDC	84 137 010	84 134 010	84 137 210	84 134 210
		18-36VAC/DC	84 137 012	84 134 012	84 137 212	84 134 212
		90-280VAC/DC	84 137 011	84 134 011	84 137 211	84 134 211
25A	48-660VAC	4-32VDC	84 137 110	84 134 110	84 137 310	84 134 310
		18-36VAC/DC	84 137 112	84 134 112	84 137 312	84 134 312
		90-280VAC/DC	84 137 111	84 134 111	84 137 311	84 134 311
50A	24-280VAC	4-32VDC	84 137 020	84 134 020	84 137 220	84 134 220
		18-36VAC/DC	84 137 022	84 134 022	84 137 222	84 134 222
		90-280VAC/DC	84 137 021	84 134 021	84 137 221	84 134 221
50A	48-660VAC	4-32VDC	84 137 120	84 134 120	84 137 320	84 134 320
		18-36VAC/DC	84 137 122	84 134 122	84 137 322	84 134 322
		90-280VAC/DC	84 137 121	84 134 121	84 137 321	84 134 321
75A	24-280VAC	4-32VDC	84 137 030	84 134 030	84 137 230	84 134 230
		18-36VAC/DC	84 137 032	84 134 032	84 137 232	84 134 232
		90-280VAC/DC	84 137 031	84 134 031	84 137 231	84 134 231
75A	48-660VAC	4-32VDC	84 137 130	84 134 130	84 137 330	84 134 330
		18-36VAC/DC	84 137 132	84 134 132	84 137 332	84 134 332
		90-280VAC/DC	84 137 131	84 134 131	84 137 331	84 134 331
100A	24-280VAC	4-32VDC	84 137 040	84 134 040	84 137 240	84 134 240
		18-36VAC/DC	84 137 042	84 134 042	84 137 242	84 134 242
		90-280VAC/DC	84 137 041	84 134 041	84 137 241	84 134 241
100A	48-660VAC	4-32VDC	84 137 140	84 134 140	84 137 340	84 134 340
		18-36VAC/DC	84 137 142	84 134 142	84 137 342	84 134 342
		90-280VAC/DC	84 137 141	84 134 141	84 137 341	84 134 341
125A	24-280VAC	4-32VDC	84 137 080	84 134 080	84 137 280	84 134 280
		18-36VAC/DC	84 137 082	84 134 082	84 137 282	84 134 282
		90-280VAC/DC	84 137 081	84 134 081	84 137 281	84 134 281
125A	48-660VAC	4-32VDC	84 137 180	84 134 180	84 137 380	84 134 380
		18-36VAC/DC	84 137 182	84 134 182	84 137 382	84 134 382
		90-280VAC/DC	84 137 181	84 134 181	84 137 381	84 134 381

4

Dimensions

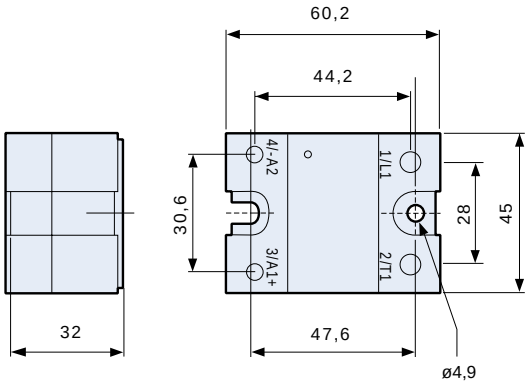

Characteristics

Operating temperature (C°)		– 20 to + 80
Storage temperature (C°)		– 40 to + 100
I/O insulation voltage (Vrms)		4000
Breakdown voltage (Vrms)		2500
Input/output capacitance (pF)		8
Frequency (Hz)		47 to 80
Material	Casing	polycarbonate UL-94V
Material	Baseplate	Zamak
Weight	Ip 20	114 g
Weight	Ip 00	97 g

To order, specify :

Standard products

Standard products, non stocked

1 Part number
Example: Single phase solid state relay - 84 137 120

Crouzet

Thermal curves

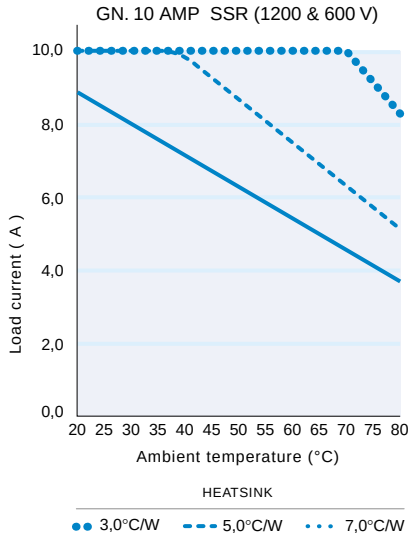

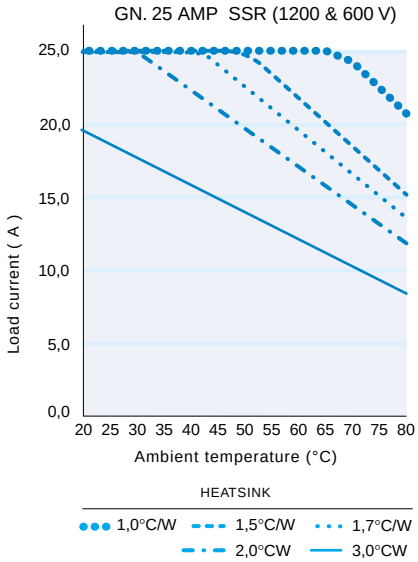

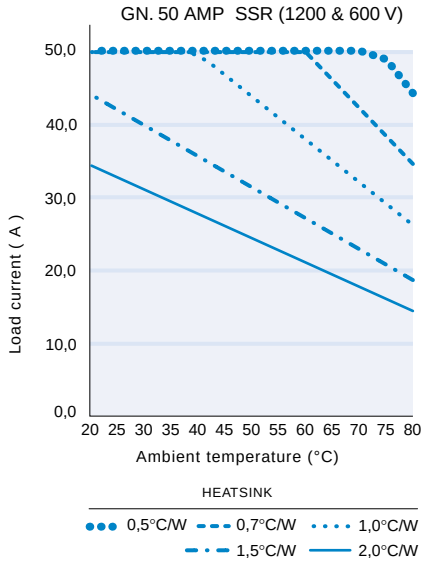

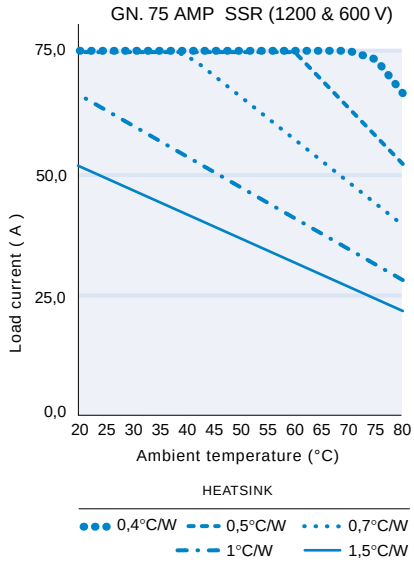

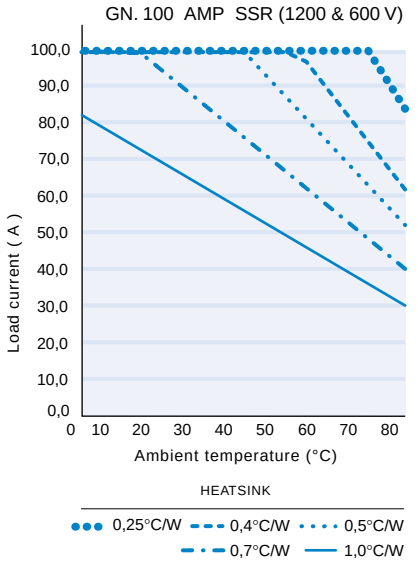

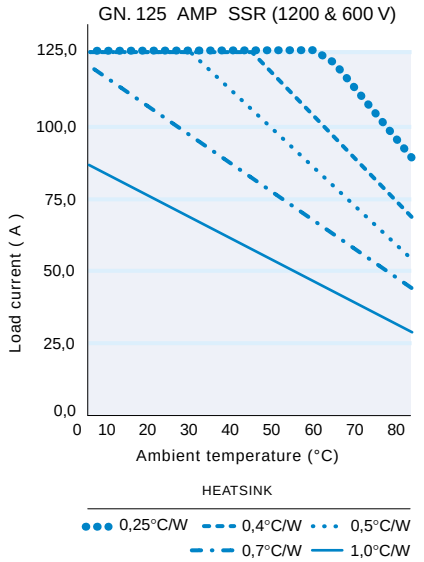

Control specifications

	4-32 VDC	18-36 VAC/DC	90-280VAC/DC
Drop-out voltage	1V	1V	10V
Max. regulated current (mA)	14	20	8.5
Turn-on time (ms) (zero voltage relay)	8.33 (60Hz) - 10 (50Hz)	20	20
Turn-on time (ms) (instantaneous relay)	0.1	0.1	0.1
Turn-off time (ms)	8.33 (60Hz) - 10 (50Hz)	30	30

Output specifications

	24-280 VAC	48-660 VAC
Peak voltage not rep. (Vp)	600	1200
Off-state leakage (@ Vmax and T=25°C)	2.5 - 4.25	2.75 - 4.75

Max. current (A)	10	25	50	75	100	125
Minimum current (mA)	100	100	100	100	100	100
Max. non-rep. 1 s surge (T=25°C) (A)	80	150	235	300	360	510
Max. non-rep. 1-cycle surge (T=25°C) (A)	300	500	780	1000	1200	1700
I^2t (50Hz-60Hz) (A^2S)	375-450	1041-1250	2535-3042	4166-5000	6000-7000	12041-14450
Voltage drop at Imax (T=25°C) (V)	1.4	1.4	1.35	1.3	1.3	1.25
Static dV/dt (V/µs)	500	500	500	500	500	500
Thermal resistance Junction/to casing (°C/W)	0.4	0.4	0.25	0.155	0.155	0.15

Courtesy of Steven Engineering, Inc. • 230 Ryan Way, South San Francisco, CA, 94080-6370 • Main Office: (650) 588-9200 • Outside Local Area: (800) 258-9200 • www.stevenengineering.com

GN Triac low-cost single-phase solid state relays : GNA5 range

- **Intended for resistive loads**
- **Current ratings 10 and 25 A**
- **Output voltage 24 to 280 V ∼**
- **"Zero voltage" switching**
- **Optimum thermal response**
- **Control input 3-32 V ⎓, 18 to 36 V ∼, 90 to 280V ∼**
- **Connection via screws or faston connectors**
- **UL/cUL, TUV approval and CE marking**

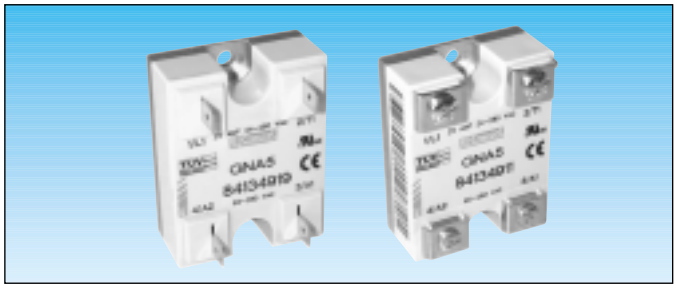

Output specifications

Range	**24-280 V ∼**	
Non-rep. peak voltage (Vp)	500	
Maximum off-state leakage (at Vmax and T = 25° C) (mA)	4.75	
Peak voltage (Arms)	10	25
Minimum current (mArms)	100	100
Max. non-rep. surge for 1 s (T = 25° C (A))	30	75
Max. non-rep. surge for 1 cycle (T = 25° C (A))	100	250
I^2t (50 Hz-60Hz) (A^2s)	50 - 41	288 - 240
Voltage drop at Imax T = 25° C (V)	1.65	1.85
Static dV/dt (V/µs)	200	200
Rth junction/casing (°C/W)	3	2

Input specifications

	4-32 V ⎓	**18-36 V ∼ ⎓**	**90-280 V ∼ ⎓**
Drop-out voltage (V)	1	2	10
Max. current (mA)	14	8	8.5
Turn-on time (ms)	8.33 (60Hz) 10 (50Hz)	20	20
Turn-off time (ms)	8.33 (60Hz) 10 (50Hz)	30	30

Characteristics

Operating temperature (°C)		-20 to +80
Storage temperature (°C)		-40 to +100
I/O insulation voltage (Vrms)		4000
Breakdown voltage (Vrms)		2500
Input/output capacitance (pF)		8
Frequency (Hz)		47 to 63
Material	Casing	UL 94 V
	Baseplate	Zamak
Weight (g)		97

Part numbers

1

Rating	Output voltage	Input voltage	Screw	Faston
10 A	24-280 V ∼	3-32 V ⎓	84 134 900	84 134 907
		18-36 V ∼ ⎓	84 134 902	84 134 908
		90-280 V ∼ ⎓	84 134 901	84 134 909
25 A	24-280 V ∼	3-32 V ⎓	84 134 910	84 134 917
		18-36 V ∼ ⎓	84 134 912	84 134 918
		90-280 V ∼ ⎓	84 134 911	84 134 919

Thermal dissipation curves

10 A

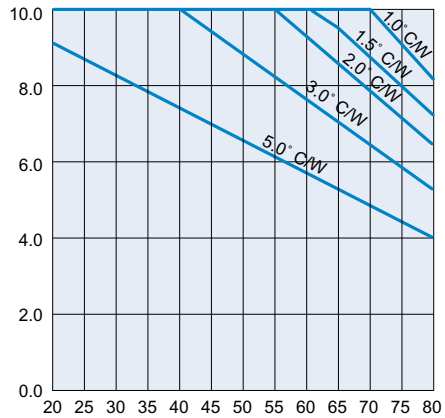

25 A

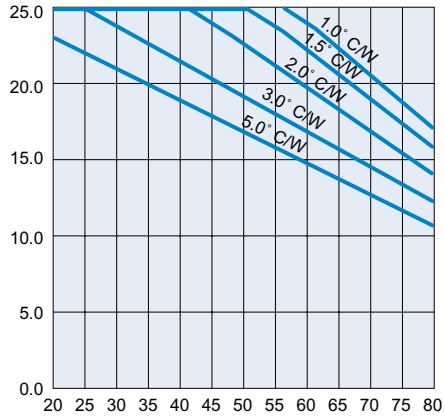

Dimensions

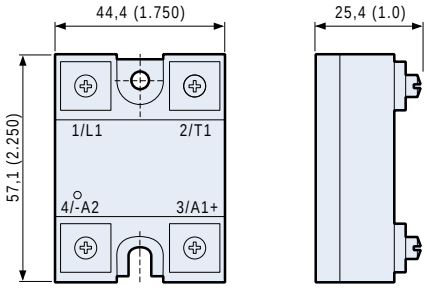

To order, specify:

Standard products

Standard products, non stocked

1 Part number
Example : GN Triac low-cost single-phase solid state relay - 84 134 900

Courtesy of Steven Engineering, Inc. • 230 Ryan Way, South San Francisco, CA, 94080-6370 • Main Office: (650) 588-9200 • Outside Local Area: (800) 258-9200 • www.stevenengineering.com

84 137 870 Specifications Products in the same range

Selling points of the range :

- FET transistor versions 10, 15 and 30 A
- Bipolar transistor version 10 A
- Control voltage : 3 to 32 V
- Optimum thermal response
- Available with or without protective cover
- UL/Cul, TUV approval and CE marking

Specifications

Current	30 A
Output voltage	1 - 50 V DC
input voltage	3 - 32 V DC
Protective cover	with protective cover
Turn-off voltage (V)	1
Thermal resistance Junction to casing (°C/W)	FET 10 A - 15 A : 2,25 FET 30 A : 2,45
Inputs specifications	
Output characteristics	
Max. controled current	20 mA
Response time (close) (µs)	2
Response time on closing (µs)	50
Max. non-rep. 10 µ(T=25°C) (A)	FET 10 A : 60 FET 15 A : 120 FET 30 A : 160
Minimum current (mA)	1

Products in the same range

Bipolar version

Current	Output voltage	input voltage	Protective cover	Part number
10 A	3 - 60 V DC	3 - 32 V DC	without protective cover	84 134 750
10 A	3 - 60 V DC	3 - 32 V DC	with protective cover	84 137 750

FET VERSION

Current	Output voltage	input voltage	Protective cover	Part number
10 A	1 - 200 V DC	3 - 32 V DC	without protective cover	84 134 850
15 A	1 - 100 V DC	3 - 32 V DC	without protective cover	84 134 860
30 A	1 - 50 V DC	3 - 32 V DC	without protective cover	84 134 870
10 A	1 - 200 V DC	3 - 32 V DC	with protective cover	84 137 850
15 A	1 - 100 V DC	3 - 32 V DC	with protective cover	84 137 860
30 A	1 - 50 V DC	3 - 32 V DC	with protective cover	84 137 870

Solid state three-phase motor reversing relay - GA0 range

- **Reverses rotation of three-phase motors**
- **Output voltage 24-480 V~**
- **Input voltage 3-32 V ⎓**
- **Input to output insulation voltage: 100ms**
- **Interlock against simultaneous actuation in both directions**
- **Back-to-back SCRs**
- **Input to output insulation voltage: 5000 V ~**
- **Protected by RC filter and overvoltage limiter**
- **Direction of rotation displayed by 2 green LEDs**

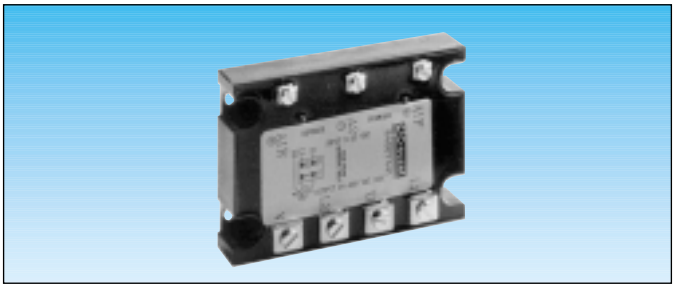

Output specifications

Voltage range (Vrms)	**24-480**
Peak voltage (V peak)	1000
Maximum current (Arms)	25
Minimum current (mArms)	200
Max. 1-cycle surge (A peak)	270
Maximum off-state leakage (mArms)	10
I^2T (t=10ms)	365
On-state voltage drop at Imax and T=25°C	1.6 Vrms
Thermal resistance/Junction to casing (o C/W)	0.2
Static (off-state) dv/dt (V/µs)	500
Supply frequency range (Hz)	47 to 63
Response time (ms)	0.2
Maximum turn-off time (ms)	20
Reversing time (ms)	100

Input specifications

Input voltage (V)	**3-32 ⎓**
Drop-out voltage (V ⎓)	1
Max. input current (mA) (input regulated current and limited)	20
Nominal resistance (+/- 10% at 25°C) (kΩ)	1

Characteristics

Operating temperature (°C)	-20 to +80
Storage temperature (°C)	-40 to +100
Input to output insulation voltage	5000 V ~
Breakdown voltage	4000 V ~
Input/output capacitance (pF)	8
Material Casing	Self-extinguishing
Baseplate	Aluminium
Weight (g)	455

Connection

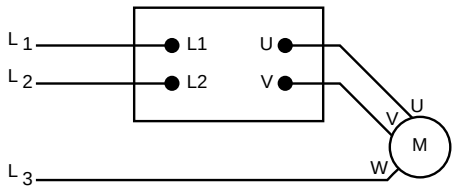

Part number

1

	84 067 441

Accessories

2

Protective cover (see page 4/31)	**26 532 797**
Heatsink (see page 4/30)	
Heat transfer compound (see page 4/32)	**18 373 112**
DIN rail adaptor (see page 4/31)	**26 532 764**
Quick-blow fuses (see page 4/32)	

Equivalent circuits

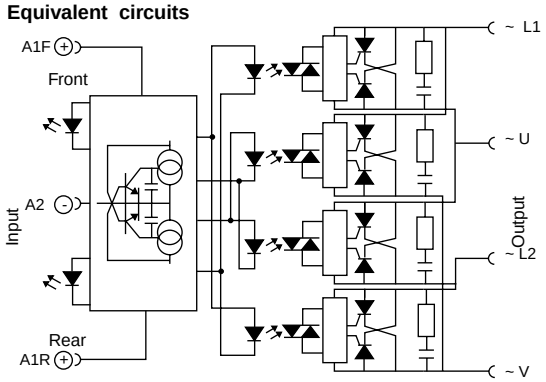

Thermal dissipation curves

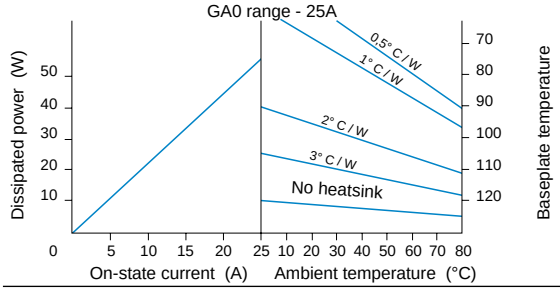

Dimensions

(General tolerances +/- 0.5)

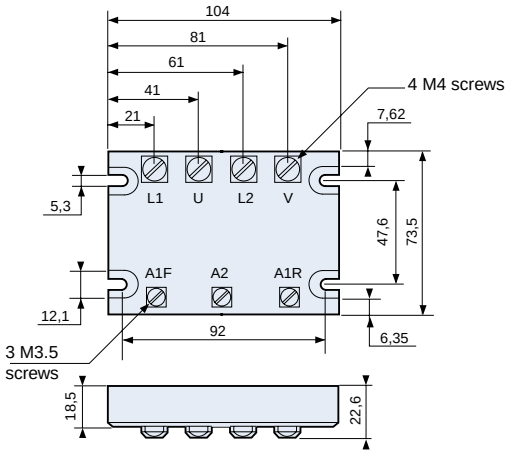

To order, specify:

Standard products

1 Part number

2 Accessory

Example: Solid state three-phase motor reversing relay - GA0 range - 84 067 441 - Protective cover - 26 532 797

Crouzet

Courtesy of Steven Engineering, Inc. • 230 Ryan Way, South San Francisco, CA, 94080-6370 • Main Office: (650) 588-9200 • Outside Local Area: (800) 258-9200 • www.stevenengineering.com

Solid state three-phase relays - GA3 range

- **For controlling three-phase loads**
- **Rating 10, 25, 45 A**
- **Output voltages to 660 Vrms**
- **Control voltage 4-32 V ⎓ or 90-280 V ∼**
- **Peak voltage: 1200 V**
- **Back-to-back SCR output**
- **Input to output insulation voltage: 4000 Vrms**
- **Protected against overvoltages by RC filter and overvoltage limiter**
- **Zero voltage or instantaneous switching**

Output specifications

Voltage range (Vrms)		**24-660**	
Peak voltage (V peak)		1200	
Maximum current (Arms)	10	25	45
Minimum current (mArms)	200	200	200
Max. 1-cycle surge (A peak)	160	270	450
Leakage current (mArms)	10	10	10
I2t (t=10ms)	128	365	1000
On-state voltage drop at Imax and T =25°C (Vmax)		1.6	
Thermal resistance/Junction to casing (o C/W)	0.25 ° C/W	0.25 ° C/W	0.2 ° C/W
Supply frequency range (Hz)		47 to 63	
Static (off-state) dv/dt		500 Vµs	
Response time	3-32 V ⎓	11 ms	
	90-280 V ∼	20 ms	
Maximum turn-off time	3-32 V ⎓	11 ms	
	90-280 V ∼	30 ms	

(For instantaneous 3-32 V ⎓ switching models, turn-on time is less than 100 µs and turn-off time less than 1/2 cycle.)

Input specifications

Input voltage (V)	**90-280 ∼**	**4-32 ⎓**
Max. input current (mA) (input current limited)	10	20
Drop-out voltage (V)	10 ∼	1 ⎓
Nominal input resistance (kΩ)		1

Characteristics

Operating temperature (°C)	-20 to +80
Storage temperature (°C)	-40 to +100
Input to output insulation voltage (Vrms)	4000
Breakdown voltage (T=25°C, 1s) (Vrms)	4000
Input/output capacitance (pF)	< 8
Insulation resistance (MΩ)	104
Material Casing	Self-extinguishing (UL 94 V0)
Baseplate	Aluminium
Weight (g)	450

Part numbers

1

Rating	Switching mode	Input voltage	
10 A	Zero voltage	4-32 V ⎓	**84 068 251**
	Instantaneous	4-32 V ⎓	**84 028 251**
25 A	Zero voltage	90-280 V ∼	**84 068 453**
		4-32 V ⎓	**84 068 451**
	Instantaneous	90-280 V ∼	**84 028 453**
		4-32 V ⎓	**84 068 651**
45 A	Zero voltage	90-280 V ∼	**84 068 653**
		4-32 V ⎓	**84 068 651**
	Instantaneous	90-280 V ∼	**84 028 653**
		4-32 V ⎓	**84 028 651**

Accessories

2

Protective cover (see page 4/31)	**26 532 796**
Heatsinks (see page 4/30)	
Heat transfer compound (see page 4/32)	**18 373 112**
DIN rail adaptor (see page 4/31)	**26 532 764**
Quick-blow fuses (see page 4/32)	

Equivalent circuits

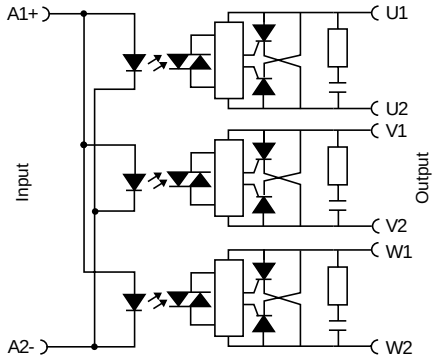

Courtesy of Steven Engineering, Inc. • 230 Ryan Way, South San Francisco, CA, 94080-6370 • Main Office: (650) 588-9200 • Outside Local Area: (800) 258-9200 • www.stevenengineering.com

Courtesy of Steven Engineering, Inc. • 230 Ryan Way, South San Francisco, CA, 94080-6370 • Main Office: (650) 588-9200 • Outside Local Area: (800) 258-9200 • www.stevenengineering.com

Thermal dissipation curves

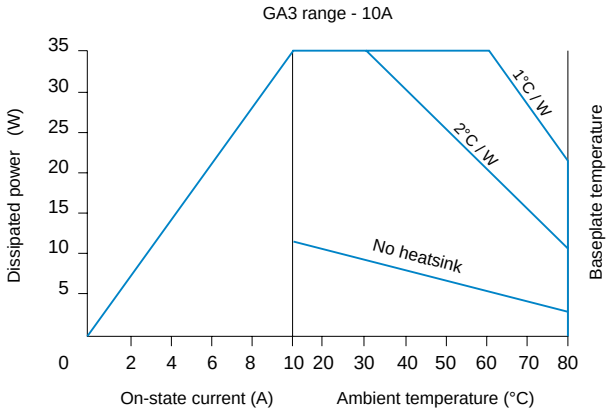

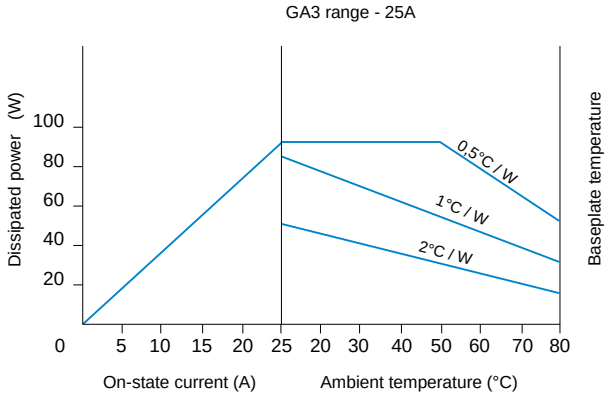

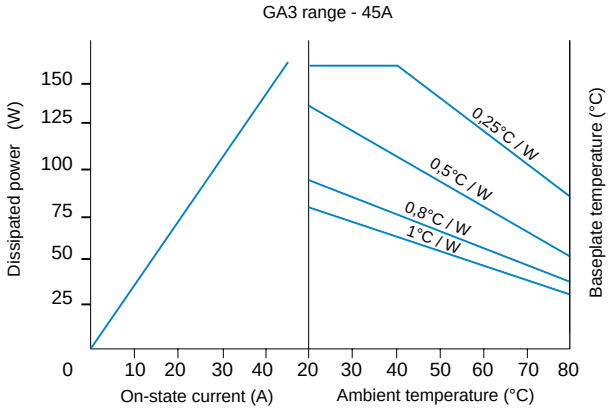

Dimensions

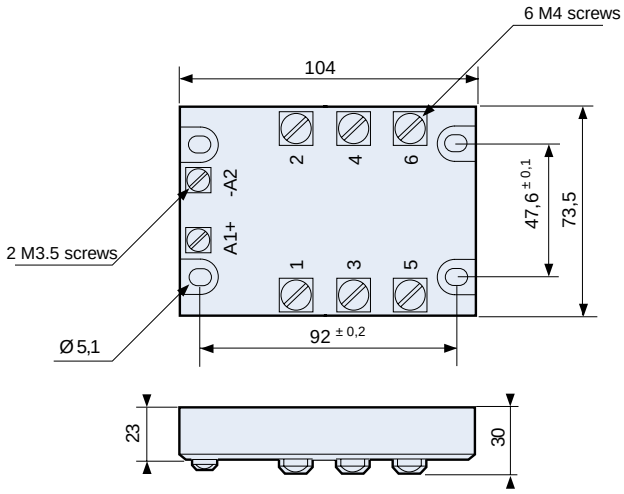

To order, specify:	
Standard products	1 Part number 2 Accessory
Standard products, non stocked	Example: Solid state three-phase relay - GA3 range - 84 068 451 - Protective cover - 26 532 796

Solid state relays - GA1 and GA8 range

- **PCB-mountable (flat pack = GA1, SIP = GA8)**
- **Rating: 4 A-5 A**
- **Peak voltage: 600 V**
- **Will withstand a 1-cycle 100 A surge**
- **TRIAC outputs**
- **UL - cUL 3 A approval and CE marking**
- **Zero voltage or instantaneous switching (5A only)**
- **Input to output insulation voltage: 4000 V**
- **Protection by RC filter**

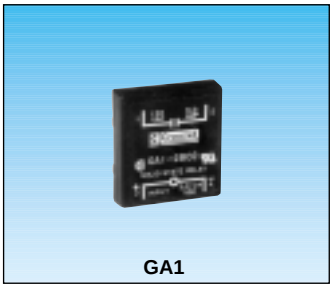
GA1

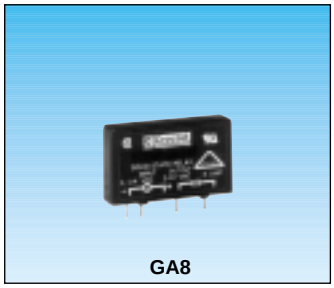
GA8

Output specifications

Voltage range (Vrms)	**24-280**	**24-280**
Peak voltage (Vpeak)	600	850
Maximum current (Vpeak)	4 or 5 depending on part no.	3
Minimum current (Vpeak)	0.05	0.05
Max. 1-cycle surge (Apeak)	100	100
Maximum off-state leakage (mArms)	6	6
On-state voltage drop at Imax and T =25°C (V peak)	1.6	1.65
Static (off-state) dv/dt (Vµs)	200	200
Maximum response time (close)	0.5 cycle	0.5 cycle
Supply frequency range	47 to 63	47 to 63

Input specifications

Input voltage (V)		**3-32 ⎓**
Drop-out voltage (V ⎓)		1
Maximum current at Vmax (mA)		25
Nominal input resistance (kΩ)		regulated

Characteristics

Operating temperature (°C)		-30 to +80
Storage temperature (°C)		-40 to +100
Input to output insulation voltage (Vrms)		4000
Input/output capacitance (pF)		8
Weight (g)		15

1

Zero voltage switching

Rating	Range	Output voltage	Input voltage	
4 A	GA 1	24-280 V ~	3-32 V ⎓	84 064 131
	GA 8	24-280 V ~	3-32 V ⎓	84 065 131
5 A	GA 8	24-280 V ~	3-32 V ⎓	84 065 030
3 A	GA 8	24-480 V ~	3-32 V ⎓	84 065 040

Instantaneous switching

Rating	Range	Output voltage	Input voltage	
5 A	GA 8	24-280 V ~	3-32 V ⎓	**84 025 030**
3 A	GA 8	24-480 V ~	3-32 V ⎓	**84 025 040**

Accessories

2

Quick-blow fuses (see page 4/32)

Equivalent circuits

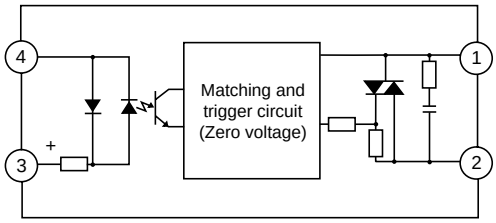

Dimensions (General tolerances +/- 0.5)

GA 1

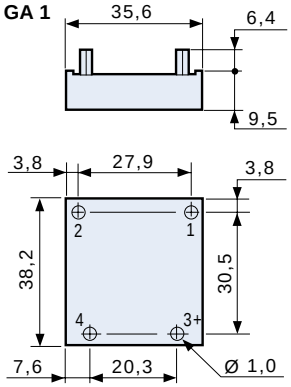

GA 8

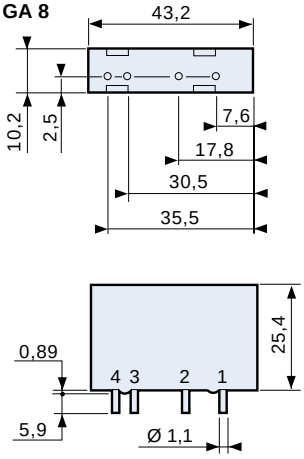

Curves for temperature-dependent derating

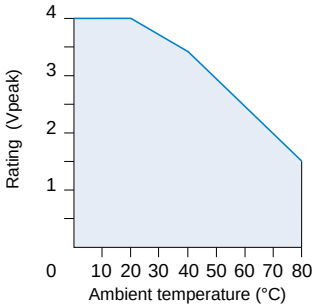

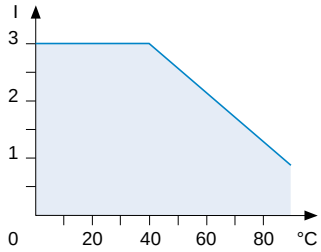

To order, specify:

Standard products

Standard products, non stocked

1 Part number 2 Accessory

Example: Solid state relay - GA8 range - 84 065 131 - Fuse Z 084 363

Courtesy of Steven Engineering, Inc. • 230 Ryan Way, South San Francisco, CA, 94080-6370 • Main Office: (650) 588-9200 • Outside Local Area: (800) 258-9200 • www.stevenengineering.com

4

Courtesy of Steven Engineering, Inc. • 230 Ryan Way, South San Francisco, CA, 94080-6370 • Main Office: (650) 588-9200 • Outside Local Area: (800) 258-9200 • www.stevenengineering.com

SMART SSR : "Self-checking" solid state relay

- **Patented operating principle (96 050 16)**
- **35 A single-phase solid state relay - ready for use**
- **Zero voltage switching**
- **Provides visual indication and electrical signal if a fault occurs in the circuit or on the relay**
- **LED display of - input status**
  - relay status
  - relay overheating
- **2 alarm outputs : 4-32 VDC push-pull transistor**

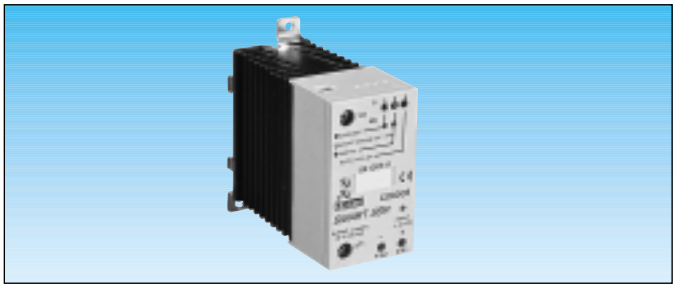

Operating principle

SMART SSR is a solid state relay which monitors its own correct operation in addition to that of the load being controlled.

SMART SSR provides information about the state of the relay and the load via 3 LED indicators and 2 alarm outputs.

Operation

SMART SSR powers itself between the relay control input -ve terminal and the 4-32 V ⎓ terminal.

When no faults are present and the relay is not being controlled, the alarm outputs are at 4-32 V ⎓ and the LEDs are off.

When no faults are present and the relay is being controlled, the green LED lights up and the alarm outputs stay at 4-32 V ⎓.

If the mains voltage disappears or if the relay output is short-circuited, the alarm output changes to 0 V ⎓ and the red LED flashes.

If the relay output is faulty, the alarm output changes to 0 V ⎓ and the red LED is on.

If the relay overheats, the "overheat" output changes to 0 V ⎓ and the yellow LED is on.

The overheat output is tripped when the internal temperature exceeds 125 °C.

The relay returns to normal state when the internal temperature drops to below 120 °C.

Operating diagram

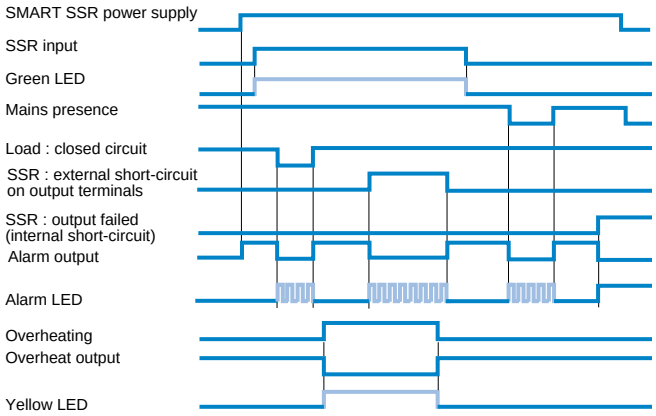

Dimensions

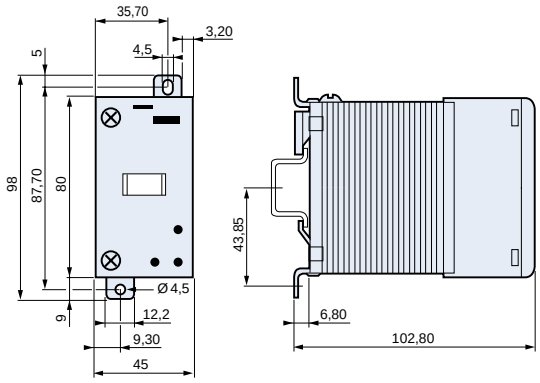

Part number

Rating	Output voltage	Input voltage	
35 A	48-530 V ∼	4-32 V	**84 130 511**

Output specifications (up to 25 °C)		
Voltage range (max. Vrms)		48-660
Peak voltage - t = 1 min (V)		1000
Max. current (A)		35
Off-state leakage at V max. and 25 °C (mA)		8
Max. current surge	1 cycle (Apeak)	750
	1 sec (Apeak)	145
On-state voltage drop at I max (Vpeak)		1.6
I^2t - t = 10 ms (A^2s)		1260
Static dv/dt (V/µs)		500
Supply frequency range (Hz)		47 to 63
Thermal resistance Junction / ambient air		3.78 ° / W
Control input specifications		
Input voltage (V)		4 to 32 ⎓
Drop-out voltage		1 V
Max. input current (mA)		10
Response time	on opening	0.5
(max. period)	on closing	0.5
DC power supply / Alarm output		
Supply voltage (in relation to the relay - terminal)		4 to 32 V ⎓
Current		15 to 45 mA
Voltage : alarm output		4 to 32 V ⎓
Current : alarm output		60 mA
Voltage : overheat output		4 to 32 V ⎓
Current : overheat output		60 mA
Characteristics		
Temperature	Operation	-20 to 80 °C
limits	Stored	-40 to 100 °C
Input to output insulation voltage		4000 Vrms
Breakdown voltage		2500 Vrms
Input/output capacitance		8 pF

Curves for temperature-dependent derating

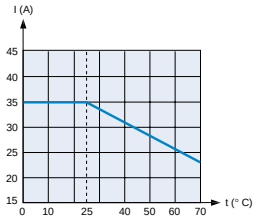

Connection

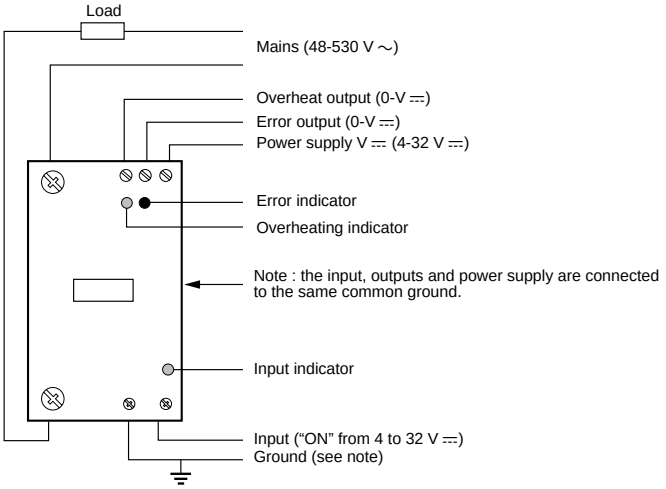

To order, specify :

Standard products

1 Part number

Example : SMART SSR 84 130 511

Crouzet

SMART MODULE : control module for "hockey puck" type solid state relays

- **Patented operating principle (96 050 16).**
- **Provides both visual and electrical information if a fault occurs in the circuit or on the solid state relay being controlled.**
- **For mounting on single-phase "hockey puck" type solid state relays.**
- **Peak voltage 1200 V ∼ : suitable for solid state relays with DC input and A ∼ output.**
- **Alarm output : 4-32 V ⎓ push-pull transistor**
- **Optical isolation 4000 V ∼.**
- **Conforms with EC low-voltage directive.**

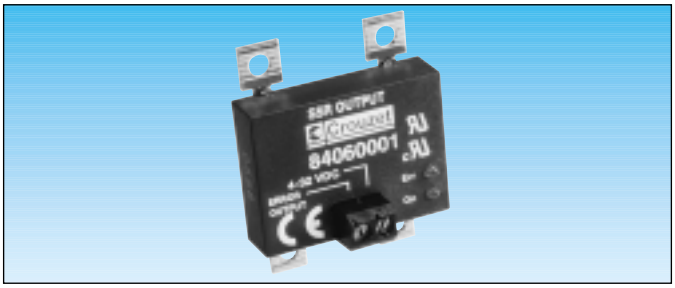

Operating principle

The SMART MODULE can be mounted on any single-phase solid state relay with DC input / AC output in a "hockey puck" casing.
The SMART MODULE has a constant power supply to ensure that both the relay and the load being controlled are functioning correctly.

The SMART MODULE provides information on the relay status by means of an LED display and an alarm output.

Operation

Power is supplied to the SMART MODULE between its 4-32 V ⎓ terminal (+) and the - terminal of the solid state relay control input.

During correct operation when the relay is not being controlled, the alarm output is at 4-32 V ⎓ and the LEDs are off.

During correct operation when the relay is being controlled, the green LED is on and the alarm remains at 4-32 V ⎓.

If mains voltage is lost or there is a short-circuit on the relay output, the alarm output changes to 0 V ⎓ and the red LED flashes.

If the relay output is faulty, the alarm output changes to 0 V ⎓ and the red LED comes on.

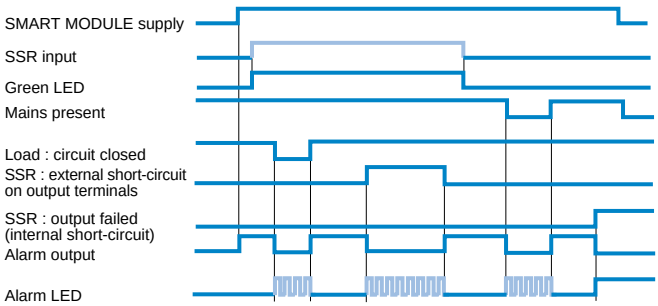

Part number

SMART MODULE	**84 060 001**

Electrical characteristics

Input		
Nominal supply voltage		5 to 24 V ⎓
Maximum voltage		32 V ⎓
Minimum voltage		3 V ⎓
Maximum voltage in stopped state		1V ⎓
(Maximum authorised voltage on relay input terminals before the SMART MODULE registers control is present).		
Line voltage		
Line voltage		48 to 660 VRMS
Peak voltage (1 min. max.)		1200 Vpeak
Leakage current (at maximum line voltage)		8 mA RMS
DC power supply / Alarm output		
Power supply voltage (in relation to relay terminal 4)		4 to 32 V ⎓
Current		15 to 35 mA
Voltage : alarm output		4 to 32 V ⎓
Current : alarm output		60 mA
General characteristics		
Temperature limits	operating	- 20 °C to + 80 °C
	storage	- 40 °C to +100 °C
Input / output insulation voltage (limited to 1 mA for 1 sec. - Ta = 25 °C)		4000 VRMS

Connections

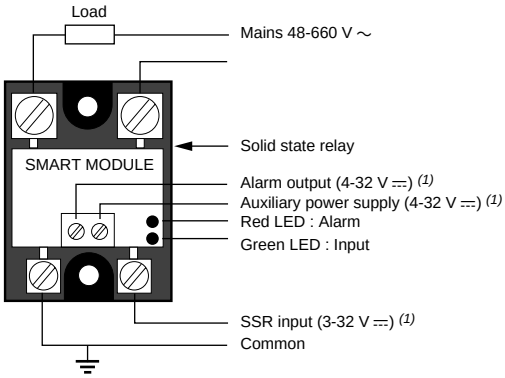

(1) The SSR input, the SMART MODULE alarm output and the SMART MODULE + power supply all share the same - terminal.

Dimensions

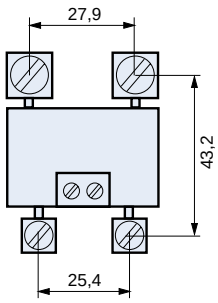

To order, specify :

Standard products

1 Part number
Example : SMART MODULE 84 060 001

Courtesy of Steven Engineering, Inc. • 230 Ryan Way, South San Francisco, CA, 94080-6370 • Main Office: (650) 588-9200 • Outside Local Area: (800) 258-9200 • www.stevenengineering.com

Extra-slim solid state relay - GZ range

- **Low-cost solid state relay - Triac output**
- **Extra-slim casing**
- **Output current 12 and 20 A**
- **Output voltages 24-280 V ∼ and 36-530 V ∼**
- **Control input 4-15 V ⎓**
- **Version with low off-state leakage (no RC circuit)**
- **Optical isolation 4 KV**
- **UL - cUL approval and CE marking**

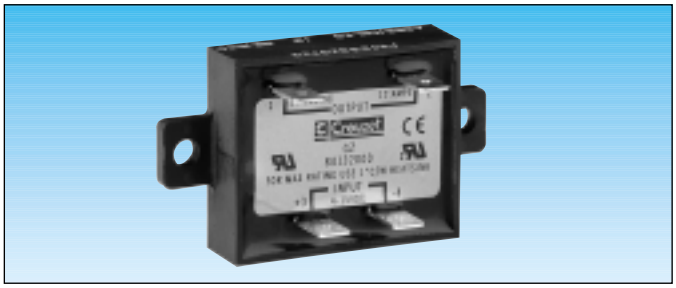

Output specifications (at 25 °C)

Voltage range (Vrms max.)	**24-280**	**36-530**
Peak voltage - t = min (V)	600	800
Off-state leakage at Vmax and 25 °C		
Standard - with RC circuit (mA)	4.2	5.3
Low off-state leakage - no RC circuit (mA)	0.1	0.1
Static dv/dt		
Standard - with RC circuit (V/µs)	500	500
Low off-state leakage - no RC circuit (V/µs)	250	250
Peak voltage (A)	12	20
Minimum current (mArms)	100	100
Max. 1-cycle surge (Apeak)	120	200
Max. 1-second surge (Apeak)	36	60
On-state voltage drop at I max (Vpeak)	1.65	1.55
I^2t (t = 10 ms) (50 Hz 1/2 wave) (A^2s)	55	55
I^2t (t = 8.33 ms) (60 Hz 1/2 wave) (A^2s)	50	50
Supply frequency range (Hz)	47 to 63	
Rth junction / casing (°K/W)	3	2.2

Control input characteristics

Input voltage (V)		4 to 15 ⎓
Drop-out voltage (V)		1
Maximum current (mA)		32 ma@ 15 V ⎓
	36-530 V ∼ version Zero voltage	63 ma@ 15 V ⎓
On-delay response time		
	Zero voltage	0.5 cycle max.
	Instantaneous (ms)	0.1
Off-delay response time		0.5 cycle max.

Characteristics

Temperature limits	Use	-20 to 80 °C
	Stored	-40 to 100 °C
Input to output insulation voltage (Vrms)		4000
Breakdown voltage (Vrms)		2500
Input/output capacitance (pF)		8

Part numbers

1

Rating	Output voltage	Switching	RC circuit	
12 A	24 - 280 V ∼	zero voltage	No	84 132 000
12 A	24 - 280 V ∼	zero voltage	Yes	84 132 200
12 A	24 - 280 V ∼	instantaneous	No	84 132 100
12 A	24 - 280 V ∼	instantaneous	Yes	84 132 300
12 A	36 - 530 V ∼	zero voltage	No	84 132 400
12 A	36 - 530 V ∼	zero voltage	Yes	84 132 600
12 A	36 - 530 V ∼	instantaneous	No	84 132 500
12 A	36 - 530 V ∼	instantaneous	Yes	84 132 700
20 A	24 - 280 V ∼	zero voltage	No	84 132 010
20 A	24 - 280 V ∼	zero voltage	Yes	84 132 210
20 A	24 - 280 V ∼	instantaneous	No	84 132 110
20 A	24 - 280 V ∼	instantaneous	Yes	84 132 310
20 A	36 - 530 V ∼	zero voltage	No	84 132 410
20 A	36 - 530 V ∼	zero voltage	Yes	84 132 610
20 A	36 - 530 V ∼	instantaneous	No	84 132 510
20 A	36 - 530 V ∼	instantaneous	Yes	84 132 710

Connection

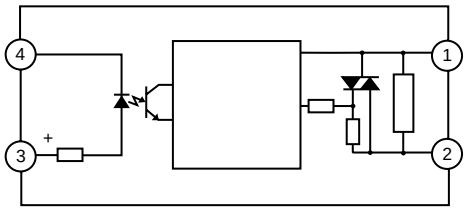

Curves for temperature-dependent derating

12 A version

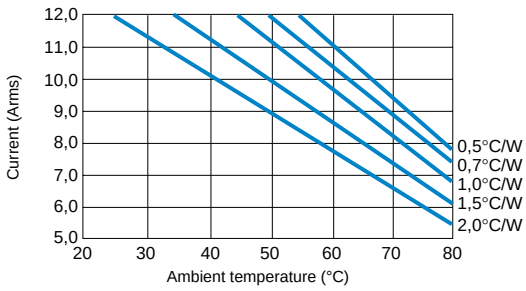

20 A version

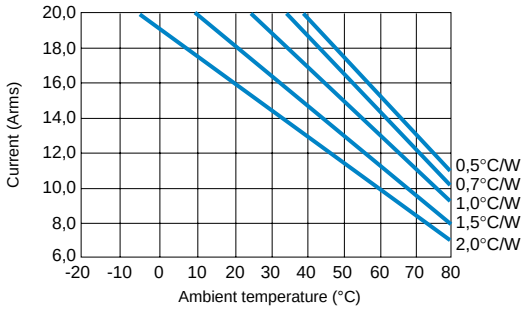

Dimensions

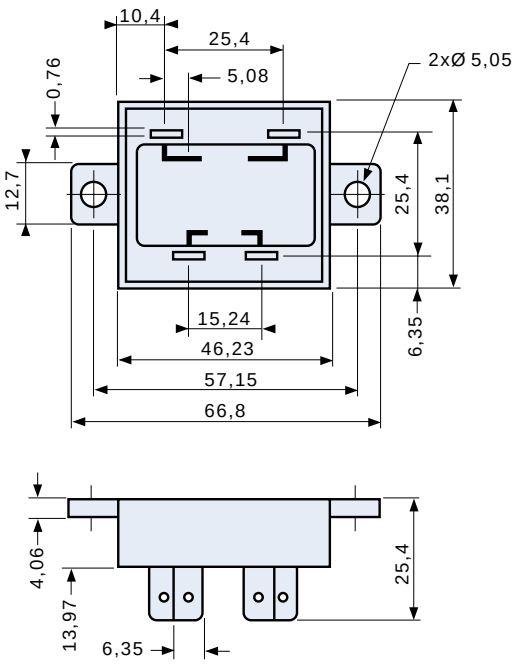

To order, specify:

Standard products

Standard products, non stocked

1 Part number

Example: Extra-slim solid state relay - GZ range - 84 132 000

Crouzet

4

Courtesy of Steven Engineering, Inc. • 230 Ryan Way, South San Francisco, CA, 94080-6370 • Main Office: (650) 588-9200 • Outside Local Area: (800) 258-9200 • www.stevenengineering.com

Relay-heatsink assembly for DIN rail mounting

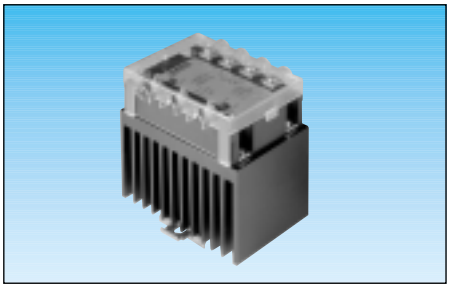

Unit part number

1

	Relay	Heatsink	Adaptor	Protective cover	Unit part number
Type GA0-25 A	84 067 441	26 532 762	26 532 764	26 532 797	84 067 449
Type GA3-25 A	84 028 451	26 532 762	26 532 764	26 532 796	84 028 459
Type GA3-25 A	84 068 451	26 532 762	26 532 764	26 532 796	84 068 459
Type GA3-25 A	84 068 453	26 532 762	26 532 764	26 532 796	84 068 409
Type GA3-45 A	84 068 651	26 532 762	26 532 764	26 532 796	84 068 659

	Temperatures (° C)						Unit part number
	20	30	40	50	60	70	
Current (A)	21	19	17	15	14	11	84 067 449
	24	22	19	17	15	12	84 028 459
	24	22	19	17	15	12	84 068 459
	24	22	19	17	15	12	84 068 409
	24	22	19	17	15	12	84 068 659

To order, specify:

Standard products

Standard products, non stocked

1 Part number

Example: Relay-heatsink assembly for DIN rail mounting 84 060 239

Courtesy of Steven Engineering, Inc. • 230 Ryan Way, South San Francisco, CA, 94080-6370 • Main Office: (650) 588-9200 • Outside Local Area: (800) 258-9200 • www.stevenengineering.com

SOLID STATE RELAY ACCESSORIES

HS1 HEATSINK

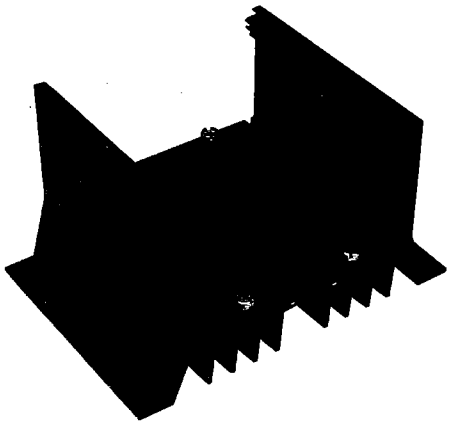

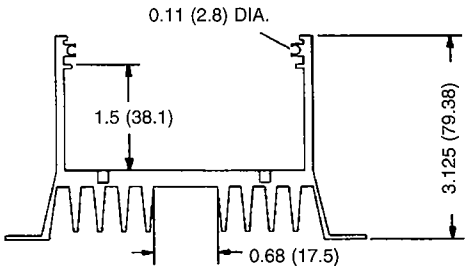

DIMENSIONS: inches (mm)
TOLERANCES: ±0.02 inches (±0.50)

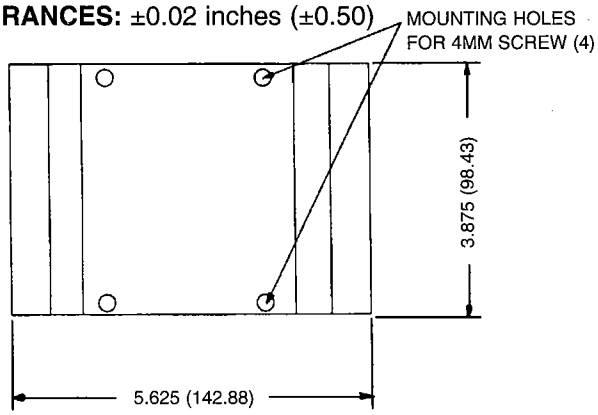

ORDERING INFORMATION:

Model #	Description
HS1	Heatsink 1.5°C/W (For GA0 & GA3 Series SSR's)

HS2 HEATSINK

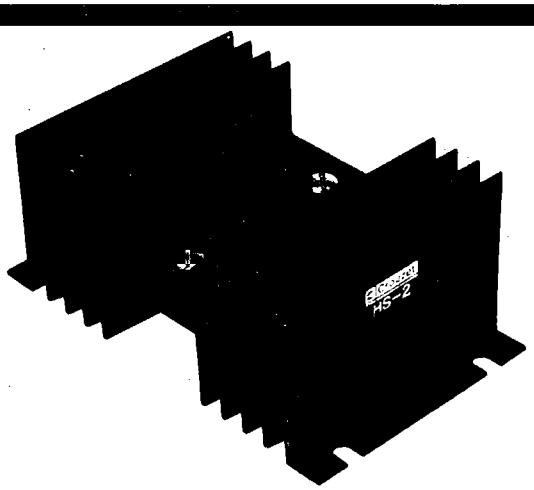

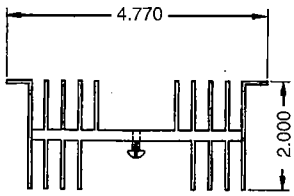

DIMENSIONS: inches
TOLERANCES: ±0.02 inches
MATERIAL: AISI 6063-T5 Aluminum

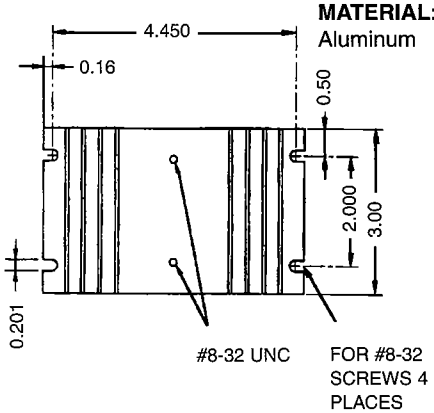

ORDERING INFORMATION:

Model #	Description
HS2	Heatsink 2.0°C/W (For G, GN & GA5 Series SSR's)

SOLID STATE RELAY ACCESSORIES

HS3 HEATSINK

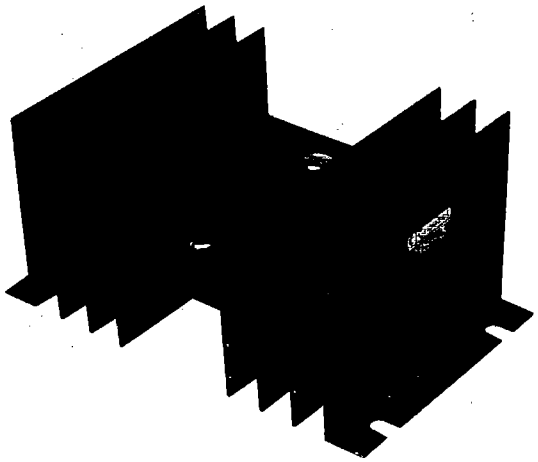

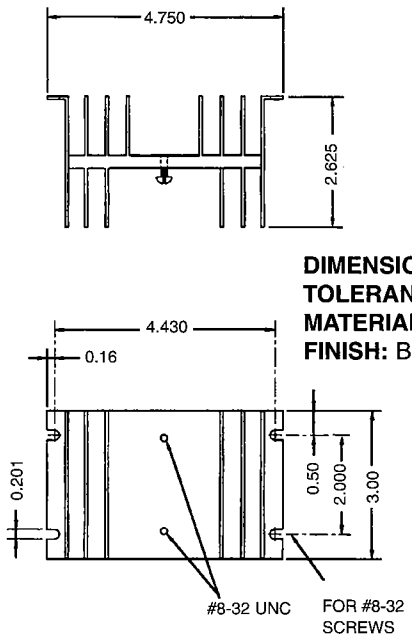

DIMENSIONS: inches
TOLERANCES: ±0.02 inches
MATERIAL: AISI 6063-T5 Aluminum
FINISH: Black Anodized

ORDERING INFORMATION:

Model #	Description
HS3	Heatsink 1.5°C/W (For G, GN & GA5 Series SSR's)

HS4 HEATSINK

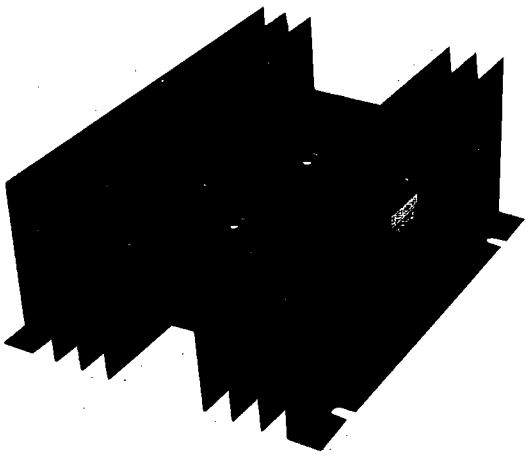

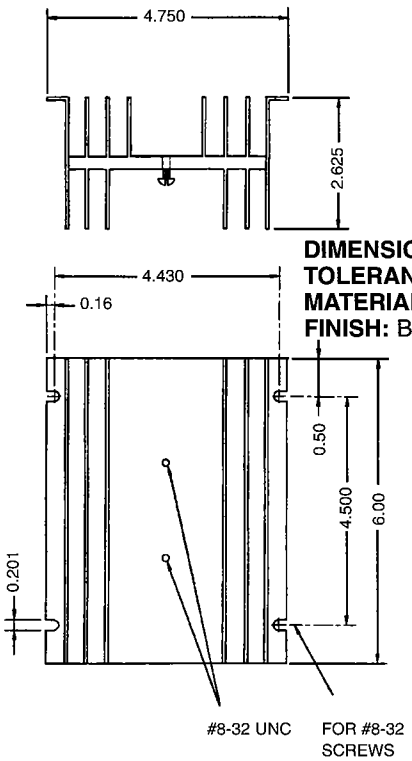

DIMENSIONS: inches
TOLERANCES: ±0.02 inches
MATERIAL: AISI 6063-T5 Aluminum
FINISH: Black Anodized

ORDERING INFORMATION:

Model #	Description
HS4	Heatsink 1.0°C/W (For G, GN & GA5 Series SSR's)

SOLID STATE RELAY ACCESSORIES

HS5 HEATSINK

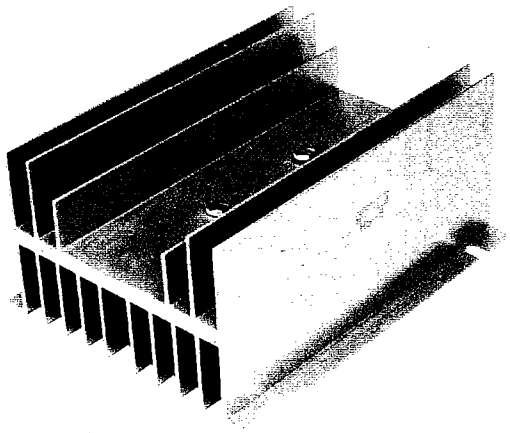

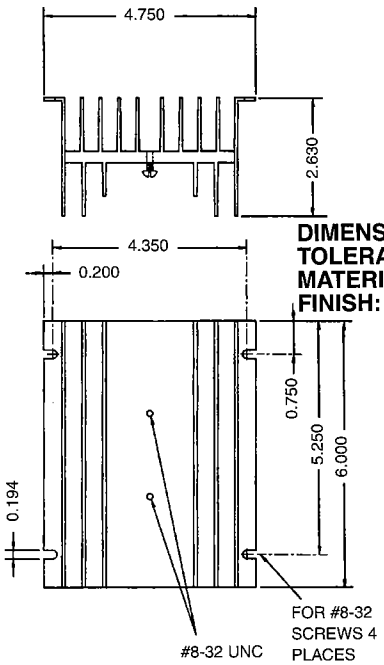

DIMENSIONS: inches
TOLERANCES: ±0.02 inches
MATERIAL: AISI 6063-T5 Aluminum
FINISH: Black Anodized

ORDERING INFORMATION:

Model #	Description
HS5	Heatsink 0.7°C/W (For G, GN & GA5 Series SSR's)

HS6 HEATSINK

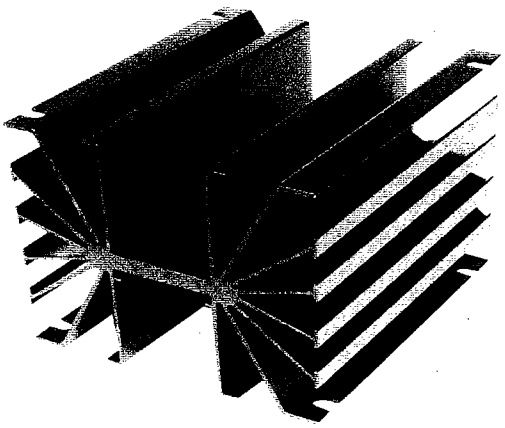

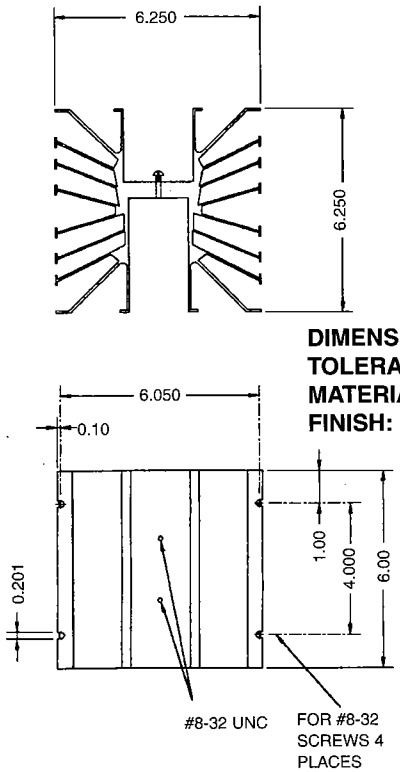

DIMENSIONS: inches
TOLERANCES: ±0.02 inches
MATERIAL: AISI 6063-T5 Aluminum
FINISH: Black Anodized

ORDERING INFORMATION:

Model #	Description
HS6	Heatsink 0.5°C/W (For G, GN & GA5 Series SSR's)

HS7 HEATSINK

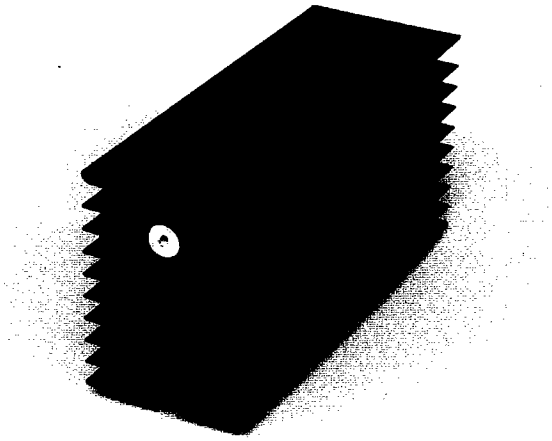

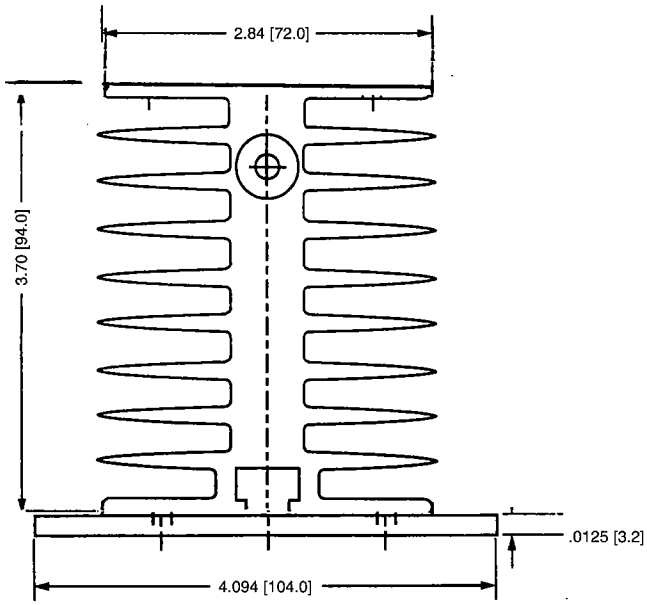

ORDERING INFORMATION:

Model #	Description
HS7	Heatsink 0.9°C/W (For G, GN, GA5, GA0 & GA3 Series SSR's)

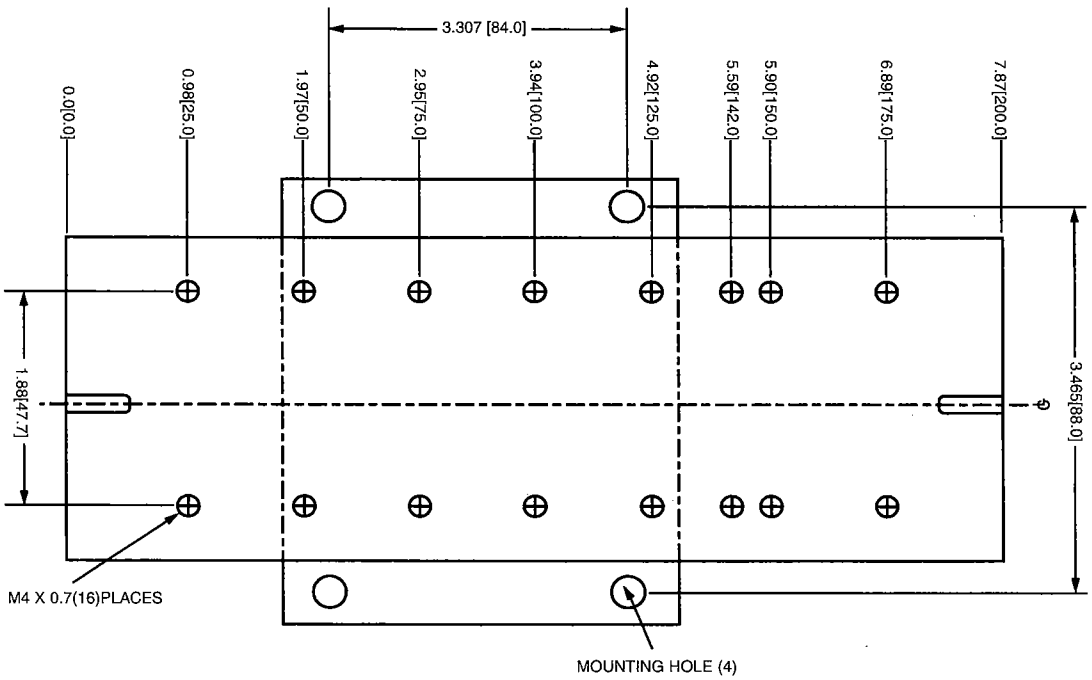

DIMENSIONS: inches (mm)
TOLERANCES: ±0.02 inches
MATERIAL: AISI 6063-T5 Aluminum
FINISH: Black Anodized

SOLID STATE RELAYS

HS8 HEATSINK

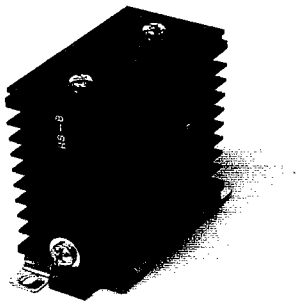

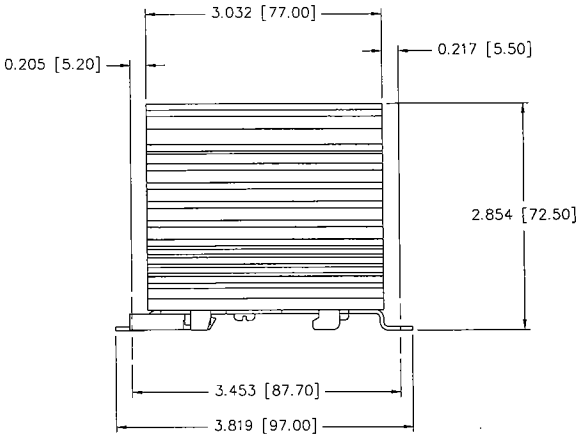

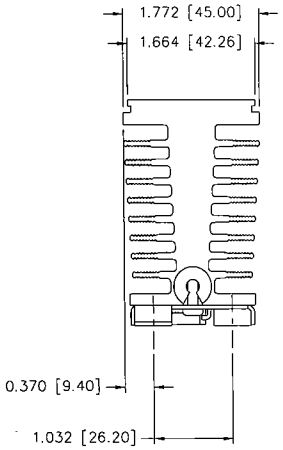

ORDERING INFORMATION:

Model #	Description
HS8	Heatsink 2.1°C/W (For G, GN & GA5 Series SSR's)

HS9 HEATSINK

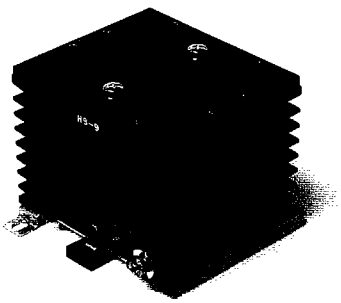

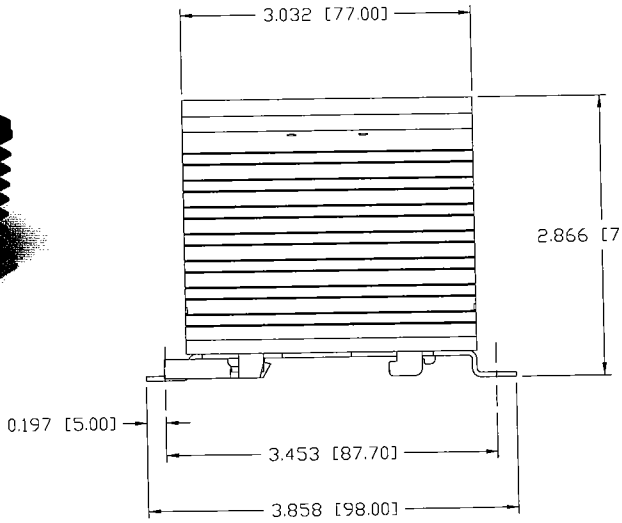

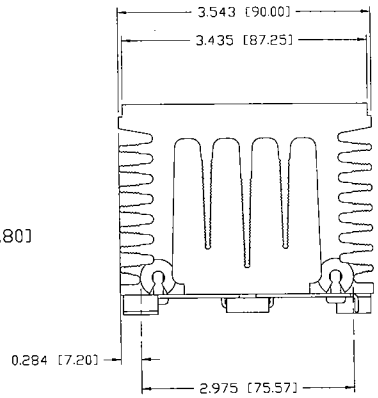

ORDERING INFORMATION:

Model #	Description
HS9	Heatsink 1.5°C/W (For G, GN & GA5 Series SSR's)

DIMENSIONS: inches (mm)
TOLERANCES: ±0.02 inches
MATERIAL: AISI 6063-T5 Aluminum
FINISH: Black Anodized

Products and specifications subject to change without notice.
Consult factory for application assistance.

SOLID STATE RELAYS

HS10 HEATSINK

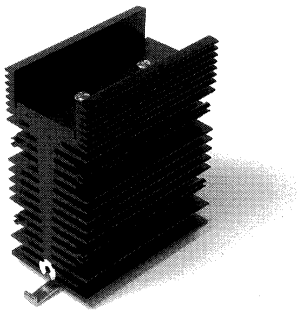

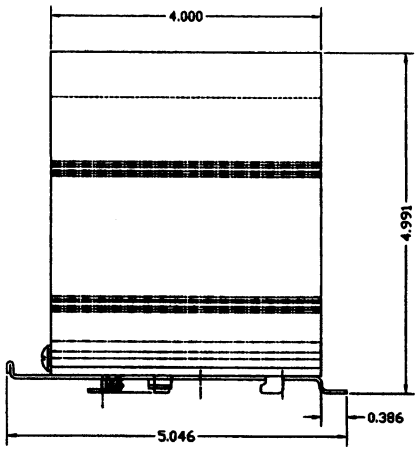

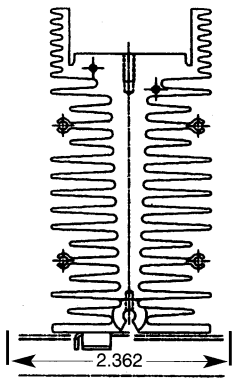

ORDERING INFORMATION:

Model #	Description
HS10	Heatsink 1.1°C/W (For G, GN & GA5 Series SSR's)

HS12 HEATSINK

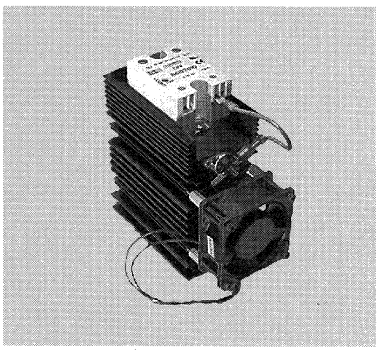

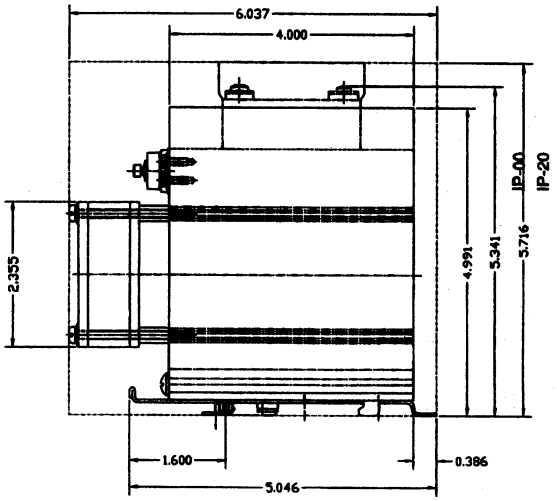

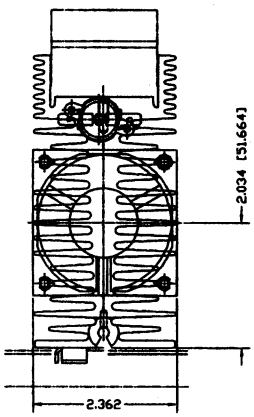

(Relay Optional)

ORDERING INFORMATION:

Model #	Description
HS12	Heatsink 0.55°C/W (For G, GN & GA5 Series SSR's)

DIMENSIONS: inches (mm)
TOLERANCES: ±0.02 inches
MATERIAL: AISI 6063-T5 Aluminum
FINISH: Black Anodized

DIGITAL I/O MODULES

DIN-RAIL MOUNTABLE INPUT MODULES

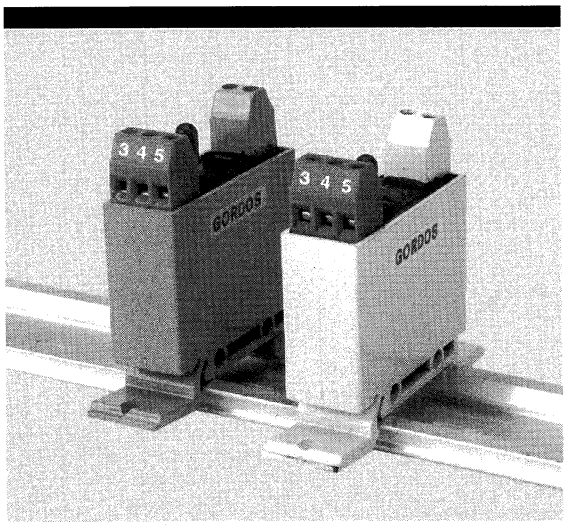

FEATURES:

- CE Compliant
- DIN-Rail Mountable Single Point Input Modules
- AC Inputs for 24 V, 120 V, 240 V
- DC Inputs for 3.3 to 32 V, 10 to 48 V
- UL Recognized (E46203)/CSA Certified (38595)
- 4 kV Optical Isolation
- Open-Collector Output, with LED Indicator
- Input and Output Barrier Strips Accept 14 to 28 AWG Wire
- Configured for Panel Mounting

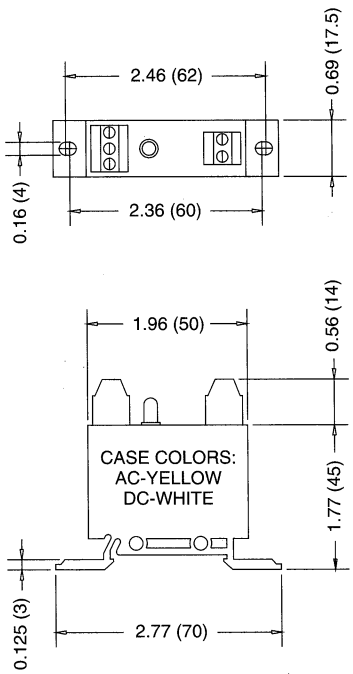

DIMENSIONS: INCHES (MILLIMETERS)
TOLERANCE: ±0.020 (±0.50)

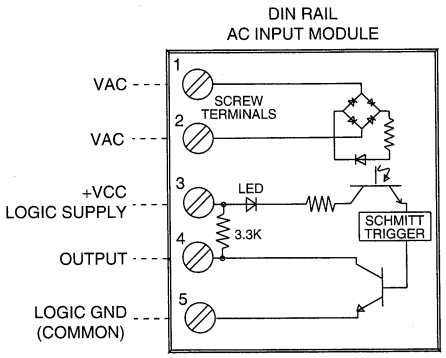

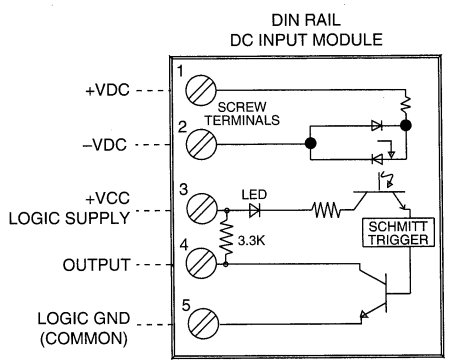

(EQUIVALENT CIRCUIT DIAGRAMS)

DIGITAL I/O MODULES

DIN-RAIL MOUNTABLE INPUT MODULES

INPUT SPECIFICATIONS: (1)

Model Number	DRIAC5 DRIAC24	DRIAC5A DRIAC24A	DRIDC5 DRIDC24	DRIDC5A DRIDC24A
Parameter				
Nominal Voltage	120 VAC	240 VAC	5-28 VDC	12-48 VDC
Maximum Voltage	140 VAC/VDC	280 VAC/VDC	32 VDC/VAC	48 VDC
Minimum Voltage	90 VAC/VDC	180 VAC/VDC	4.0 VDC/VAC	10 VDC
Resistance (2)	28 kΩ	75 kΩ	1 kΩ	2 kΩ
Maximum Current (3)	5.0 mArms	5.0 mArms	34 mA	34 mA
Drop-out Current (4)	2.0 mArms	1.5 mArms	1.0 mA	1.0 mA
Allowable Current/	2.5 mArms	2.0 mArms	1.5 mA	1.5 mA
Voltage for No Output (5)	50 VAC/VDC	50 VAC/VDC	2.0 VDC	4.0 VDC

OUTPUT SPECIFICATIONS: (1)

Model Number	DRIAC5 DRIAC5A DRIDC5 DRIDC5A	DRIAC24 DRIAC24A DRIDC24 DRIDC24A	
Parameter			**Units**
Nominal Logic Supply Voltage	5.0	24.0	VDC
Maximum Logic Supply Voltage	6.0	30.0	VDC
Minimum Logic Supply Voltage	3.0	20.0	VDC
Maximum Logic Supply Current (6)	28.0	28.0	mA
Maximum Logic Supply Leakage Current (7)	10.0	10.0	µA
Maximum Voltage (8)	30.0	30.0	VDC
Maximum Current (9)	50.0	50.0	mA
Maximum Leakage Current (10)	10.0	10.0	µA
Maximum Voltage Drop (11)	0.2	0.2	VDC

GENERAL SPECIFICATIONS: (1)

Model Number	DRIAC5 DRIAC5A DRIAC24 DRIAC24A	DRIDC5 DRIDC5A DRIDC24 DRIDC24A	
Parameter			**Units**
Operating Temperature Range	-30 to 80	-30 to 80	°C
Storage Temperature Range	-40 to 100	-40 to 100	°C
Maximum Turn-on Time (12)	20	1.0	mSec
Maximum Turn-off Time (12)	30	1.0	mSec
Input/Output Isolation Voltage (13)	4000	4000	VAC
Input/Output Capacitance (typical)	8	8	pF
Line Frequency Range	47 to 63	DC	Hertz

TABLE OF MODEL NUMBER SUFFIXES IDENTIFYING OPTIONAL FEATURES

Suffix	Feature
A	High voltage versions (240 VAC for AC modules), (48 VDC for DC modules).

Notes:

(1) Specifications apply to an ambient temperature of -30 to 80°C unless otherwise noted.
(2) Resistance values for IAC modules are effective impedance values at 25°C.
(3) Measured at maximum specified input voltage, 25°C.
(4) Defined as the maximum current allowed through the module's input to guarantee that the output will switch from "on" to "off." Higher currents may result in the output remaining in the "on" state.
(5) Defined as the maximum current allowed through the module's input that will not switch the module's output state from "off" to "on."
(6) At maximum specified logic supply voltage and 25°C.
(7) At maximum specified logic voltage and 25°C.
(8) Maximum allowable applied voltage across open collector output transistor. Factory recommends this voltage not exceed logic voltage.
(9) Maximum allowable sinking current through open collector output transistor.
(10) At maximum output voltage and 25°C.
(11) At maximum allowable output current and 25°C.
(12) At nominal logic supply voltage, 25 mA output sinking current, nominal input voltage and 25°C.
(13) At 25°C for 1 second maximum duration.

DIGITAL I/O MODULES

DIN-RAIL MOUNTABLE OUTPUT MODULES

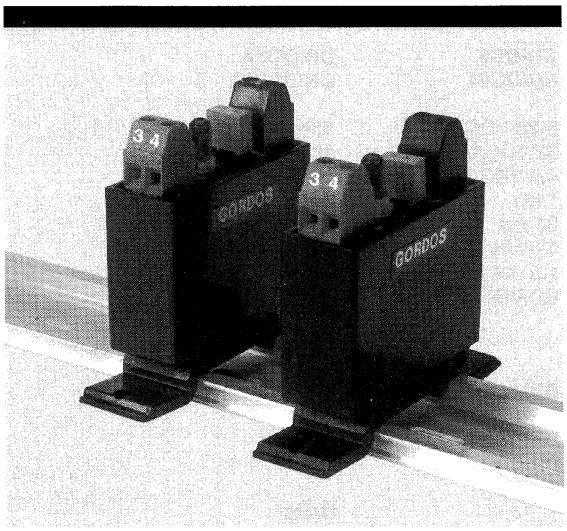

FEATURES:

- CE Compliant
- DIN-Rail Mountable Single Point Output Modules (35mm DIN)
- UL Recognized/Horse Power Rated (E46203)/ CSA certified (38595)
- AC Output Rating 5 Amp at 12 to 280 VAC, with 250 Amp Single Cycle Surge Capability
- DC Output Rating 3 Amp at 3 to 60 VDC
- 3 to 32 VDC Input for AC Module, 5V or 24V for DC Module
- Zero Voltage Turn-on for AC Module
- 4 kV Optical Isolation with LED Indicator
- Barrier Strips Accept 14 to 28 AWG Wire
- Configured for Panel Mounting

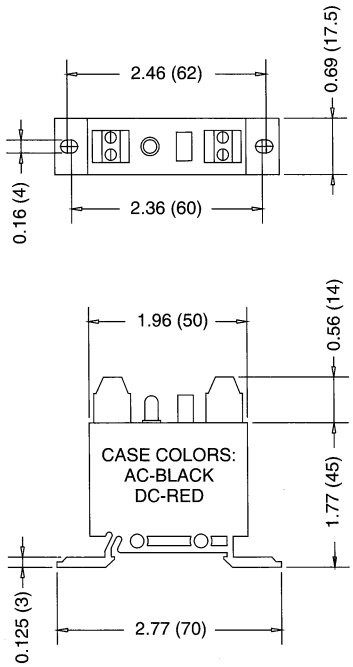

DIMENSIONS: INCHES (MILLIMETERS)
TOLERANCE: ±0.020 (±0.50)

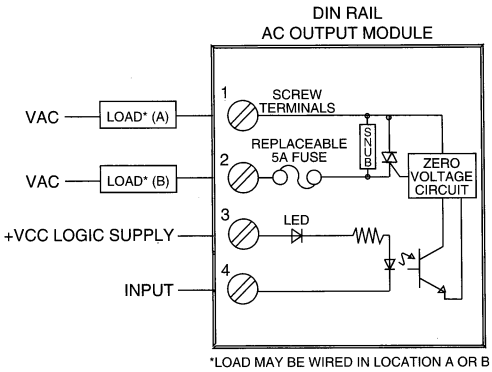

*LOAD MAY BE WIRED IN LOCATION A OR B

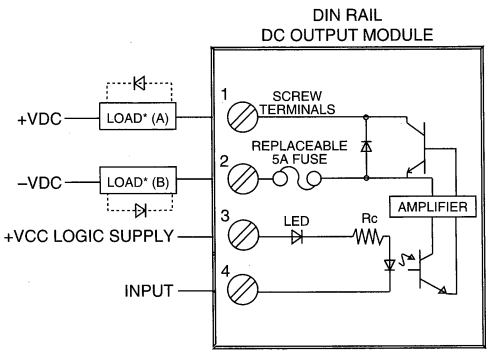

*LOAD MAY BE WIRED IN LOCATION A OR B.
DC INDUCTIVE LOADS MUST BE DIODE SUPRESSED TO PREVENT DAMAGE TO THE I/O MODULE.

(EQUIVALENT CIRCUIT DIAGRAMS)

DIGITAL I/O MODULES

DIN-RAIL OUTPUT MODULES

INPUT SPECIFICATIONS: (1)

Model Number Parameter	DROAC	DRODC5	DRODC24	Units
Nominal Voltage	5-24	5.0	24.0	VDC
Minimum Voltage	3.7	3.5	18.0	VDC
Maximum Voltage	32	8.0	32.0	VDC
Drop-Out Voltage	1.0	1.0	1.0	VDC
Maximum Current (2)	18.0	18.0	13.0	mA
Resistance (3)	—	250	2000	Ohms

OUTPUT SPECIFICATIONS: (1)

Model Number Parameter	DROAC	DRODC5 DRODC24
Nominal Line Voltage	120/240 VAC	5-48 V
Minimim Line Voltage	12 VAC	3.0 V
Maximum Line Voltage	280 VAC	60 V
Max Off-State Voltage (4)	600 Vpeak	60 V
Max Off-State Leakage (5)	.1 mArms	10 µA
Static Off-State dv/dt (6)	200 V / µsec	N/A
Maximum Rated On-State Current (7)	5.0 Arms	3.0 A
Min On-State Current	50 mArms	10 mA
Max Surge Current (8)	250 Apeak	5.0 A
On-State Voltage Drop (9)	1.6 V	1.5 V
Horse Power Rating (13)	1/2 H.P.	N/A

GENERAL SPECIFICATIONS: (1)

Model Number Parameter	DROAC	DRODC5 DRODC24	Units
Operating Temperature Range	-30 to 80	-30 to 80	°C
Storage Temperature Range	-40 to 100	-40 to 100	°C
Maximum Turn-on Time (10)	8.33	0.1	mSec
Maximum Turn-off Time (10)	8.33	0.75	mSec
Input/Output Isolation Voltage (11)	4000	4000	VAC
Input/Output Capacitance (typical)	8	8	pF
Line Frequency Range	47 to 63	DC	Hertz
Fuse (12)	5	5	Amps

Notes:

(1) Specifications apply to an ambient temperature of -30 to 80°C unless otherwise noted.
(2) At nominal input voltage for DC modules, AC modules are current limited +/-10% at 25°C .
(3) +/-10% at 25°C for DC modules.
(4) Maximum 1 minute duration for OAC modules when applied as a DC voltage rather than peak AC voltage.
(5) At maximum line voltage, 25°C for OAC modules, and 80°C for ODC modules.
(6) Minimum dv/dt per EIA/NARM RS443, method RS397. dv/dt ratings do not apply to ODC modules.
(7) At 40°C, derate OAC modules by 125 mA/°C to 80°C; derate ODC modules by 50 mA/°C to 80°C.
(8) At 25°C. Maximum duration: 1 AC cycle for OAC modules, 1 second for ODC modules.
(9) At maximum rated on-state current and 25°C.
(10) At maximum line voltage, maximum rated output current, nominal input voltage, 25°C. Switching speed of OAC modules based upon 60 Hz line frequency.
(11) At 25°C for 1 second maximum duration.
(12) Fuse is Buss, PC-TRON #PCE5.
(13) 1/2 H.P. at 240 VAC, 1/4 H.P. at 120 VAC.

Products and specifications subject to change without notice.
Consult factory for application assistance.

204 Airline Drive, Suite 300, Coppell, Texas 75019 / Tel: (800) 677-5311 / FAX: (800) 677-3865 / www.crouzet.com/us

Мы молодая и активно развивающаяся компания в области поставок электронных компонентов. Мы поставляем электронные компоненты отечественного и импортного производства напрямую от производителей и с крупнейших складов мира.

Благодаря сотрудничеству с мировыми поставщиками мы осуществляем комплексные и плановые поставки широчайшего спектра электронных компонентов.

Собственная эффективная логистика и склад в обеспечивает надежную поставку продукции в точно указанные сроки по всей России.

Мы осуществляем техническую поддержку нашим клиентам и предпродажную проверку качества продукции. На все поставляемые продукты мы предоставляем гарантию .

Осуществляем поставки продукции под контролем ВП МО РФ на предприятия военно-промышленного комплекса России , а также работаем в рамках 275 ФЗ с открытием отдельных счетов в уполномоченном банке. Система менеджмента качества компании соответствует требованиям ГОСТ ISO 9001.

Минимальные сроки поставки, гибкие цены, неограниченный ассортимент и индивидуальный подход к клиентам являются основой для выстраивания долгосрочного и эффективного сотрудничества с предприятиями радиоэлектронной промышленности, предприятиями ВПК и научно-исследовательскими институтами России.

С нами вы становитесь еще успешнее!

Наши контакты:

Телефон: +7 812 627 14 35

Электронная почта: sales@st-electron.ru

Адрес: 198099, Санкт-Петербург, Промышленная ул, дом № 19, литера Н, помещение 100-Н Офис 331