17H

D-Sub connectors - Stamped and Formed Contacts

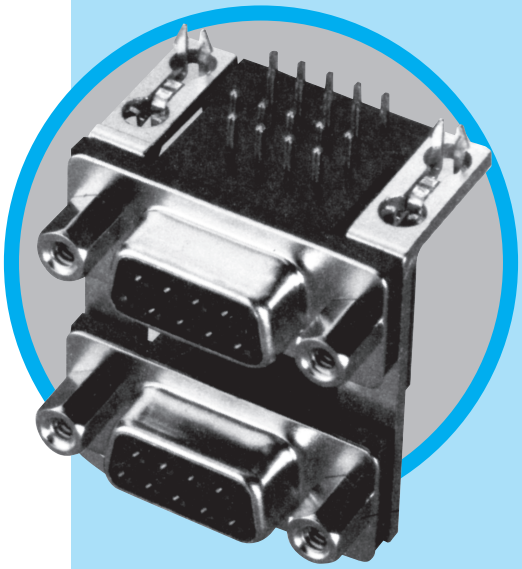

DUAL PORT D-SUB CONNECTORS

MAIN CHARACTERISTICS

Specifications

• Connectors according to MIL C24308

Materials and platings	
Shells	Steel, tin plated
Insulator	Glass-filled thermoplastic, UL 94V-0
Pin contacts	Brass, selected gold in mating area; 2.54µm (100µ") min. tin on termination area over 1.27µm (50µ") min. nickel
Socket contact	Phosphor bronze, selected gold in mating area; 2.54µm (100µ") min. tin on termination area over 1.27µm (50µ") min. nickel
Rear insert	Brass, 2.54µm (100µ") min. nickel plated
Boardlock	Phosphor bronze, 2.54µm (100µ") min. tin plated
Screwlock	Brass, 2.54µm (100µ") min. nickel plated

Electrical Data	
Current rating	3A
Voltage rating	250V AC/rms 60Hz
Withstanding voltage	1000V AC/rms 60Hz for one minute
Insulation resistance	1000MΩ
Contact resistance	20mΩ max

Climatic Data	
Operating temperature	-55°C to +125°C
Salt spray	24 hours

Mechanical Data

Single contact insertion force 0.54kg (1.19lb) max
Single contact withdrawal force 0.06kg (0.13lb) min
Mating and unmating force
Unit: kg (lb)

No. of Cts	Mate (max)	Unmate (min)
9	3.05 (6.74)	0.36 (0.79)
15	5.09 (11.24)	0.46 (1.01)
25	8.44 (18.66)	0.81 (1.8)
15 (Hi-den)	3.81 (8.42)	0.52 (1.14)

Standard plating thicknesses
• gold flash
• 0.4µm (15µ") gold
• 0.76 µm (30µ") gold

DESCRIPTION

Amphenol's G17H dual port connectors are a state of the art design. The front metal shell helps reduce EMI / RFI emissions.

Designed to save PC board space, Amphenol 's dual port provides two I / O connectors in a minimal amount of board space.

Economical dual port connectors

APPLICATIONS

• **Industrial**
• **Telecom**
• **Any industry standard I / O connections**

17H / E13

Amphenol RoHS Compliant EU 2002/95/EC

Amphenol

Shell size dimensions- standard and high density

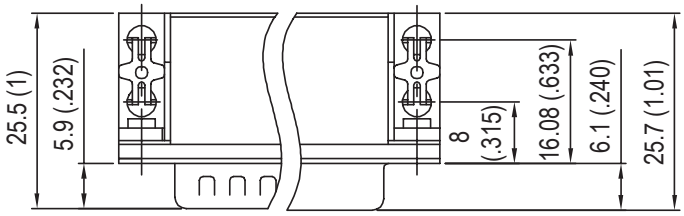

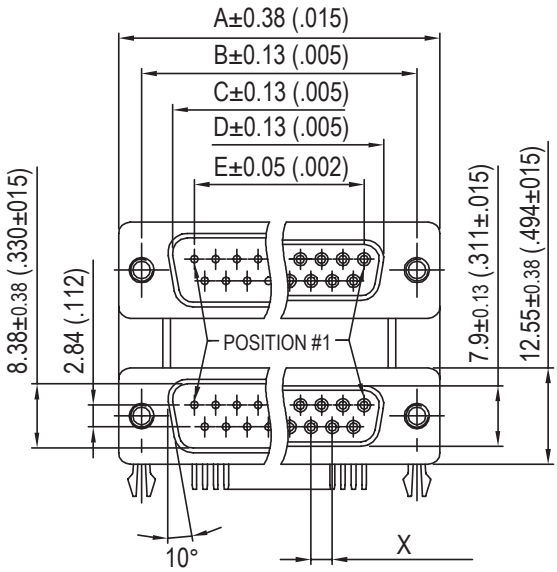

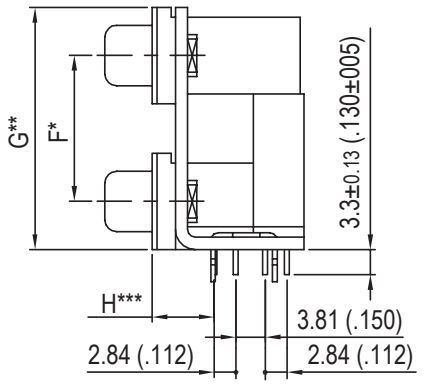

* spacing between ports (see "how to order" for dimensions)
** profile distance (see "how to order" for dimensions)
*** Footprint options (see "how to order" for dimensions)
H*** Standard Density (SD)
High Density (HD)
SD / SD = 8.08mm (.318")
SD / HD = 5.08mm (.200")
= 8.89mm (.350")
HD / HD = 8.89mm (.350")
= 5.08mm (.200")

Recommended P.C.B. Layout

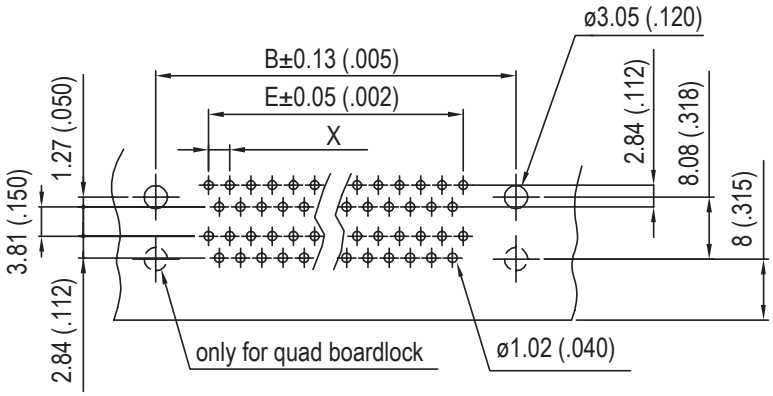

Shell Size	Nb OF CONTACTS	DIMENSIONS mm (inch)				
		A	B	C PLUG	D SOCKET	E
E	9/HD 15	30.84 (1.21)	24.99 (.984)	16.92 (.666)	16.24 (.639)	11.09 (.437)
A	15/HD 26	39.24 (1.54)	33.32 (1.31)	24.7 (.972)	24.56 (.967)	19.39 (.763)
B	25	53.04 (2.09)	47.04 (1.85)	38.96 (1.53)	38.38 (1.51)	33.24 (1.31)
E	15 (Hi-den)	30.84 (1.21)	24.99 (.984)	16.92 (.666)	16.24 (.639)	10.31 (.406)
C	37	69.32 (2.73)	63.50 (2.50)	55.42 (2.18)	54.76 (2.16)	49.86 (1.96)

Panel mounting option

Flange mounting options:

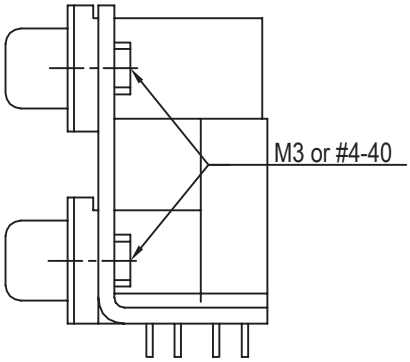

Threaded rear insert
0 / 4

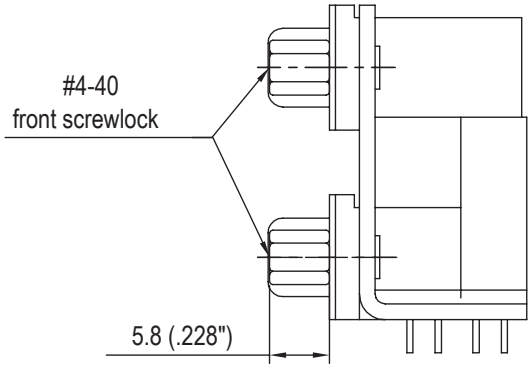

Fixed front female screwlock
7

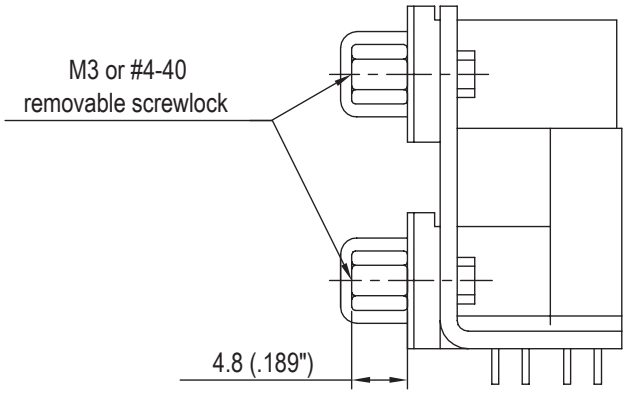

Removable female screwlock
1 / 5

Board mounting options:

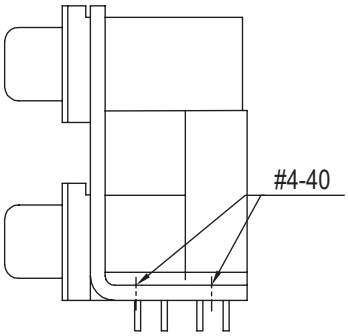

Threaded hole
1

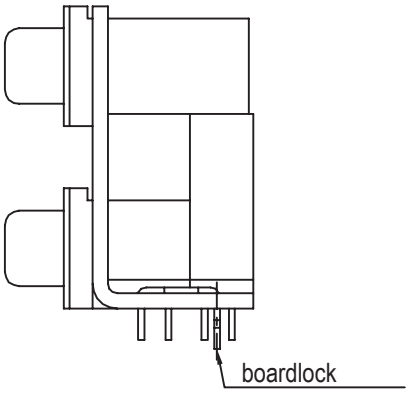

Dual arrowhead boardlock
2

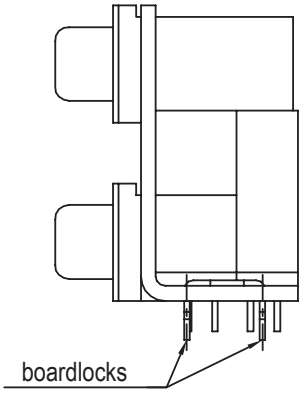

Quad arrowhead boardlock
3

NOTES

Dual Port Connectors

L17H X X X X X X X X

Spacing Between Ports

1 - **F** = 15.88mm (.625")
G = 28.42mm (1.12")
2 - **F** = 19.05mm (.750")
G = 31.60mm (1.24")
3 - **F** = 22.86mm (.900")
G = 35.41mm (1.39")
4 - **SCSI**
G = 12.80mm (.504")
7 - **F** = 20.70mm (..815")
G = 32.20mm (1.26")

Top Connector

1 = 9 Pos. Male
2 = 9 Pos. Female
3 = 15 Pos. Male
4 = 15 Pos. Female
5 = 25 Pos. Male
6 = 25 Pos. Female
7 = 15 Pos. High Density Female
8 = 50 Pos. Female SCSI
9 = 26 Pos. High Density Female
J = 15 Pos. High Density Male
D = 37 Pos. Male
E = 37 Pos. Female
F = 44 Pos. High Density Male
G = 44 Pos. High Density Female
M = 62 Pos. High Density Male
N = 62 Pos. High Density Female
P = 78 Pos. High Density Male
Q = 78 Pos. High Density Female

Bottom Connector

1 = 9 Pos. Male
2 = 9 Pos. Female
3 = 15 Pos. Male
4 = 15 Pos. Female
5 = 25 Pos. Male
6 = 25 Pos. Female
7 = 15 Pos. High Density Female
8 = 50 Pos. Female SCSI
9 = 26 Pos. High Density Female
K = 15 Pos. High Density Male
D = 37 Pos. Male
E = 37 Pos. Female
F = 44 Pos. High Density Male
G = 44 Pos. High Density Female
M = 62 Pos. High Density Male
N = 62 Pos. High Density Female
P = 78 Pos. High Density Male
Q = 78 Pos. High Density Female
R = 9 Pos. Male + 9 Pos. Male
S = 9 Pos. Female + 9 Pos. Female

Footprint Options

SD / SD
BLANK = 8.08mm (.318")
SD / HD
BLANK = 5.08mm (.200")
889 = 8.89mm (.350")
HD / HD
BLANK = 8.89mm (.350")
508 = 5.08mm (.200")

Flange Mounting Options

0 = 4-40unc Rear Insert
1 = 4-40unc Removable Screwlock
3 = 3.05mm (.120") Clear Hole
4 = M3 Rear Insert
5 = M3 Removable Screwlock
7 = 4-40unc Fixed Front Screwlock

Board Mounting Options

0 = Triple Arrowhead Boardlock
1 = 4 * Threaded 4-40unc Inserts
2 = Dual Arrowhead Boardlocks
3 = Quad Arrowhead Boardlocks
4 = 3.18mm (.125") Clear Hole

Shell Plating

1 = Bright Tin / Nickel
2 = Nickel

Contact Plating

0 = Flash Fold
1 = 0.4µm (15µ") Gold
2 = 0.76µm (30µ") Gold
3 = Full Flash Gold
4 = 1.27µ" (50µ") Gold

For special request, please consult factory

Do not hesitate to contact us for further information

Amphenol

Amphenol IT & Communication Products
Block A3/A4, The 4th Industrial District of
Industrial Headquarters, Dong Keng Road
Gong Ming Town, Shen Zhen China
Fax:+86(0)755 2754 9955

Technical Support
Tel:+86(0)755 2717 7945
Info-dsub@amphenol.com.cn
http://www.dsubconnector.com

The information given in this document are as a guideline only. We reserve the right to modify our products in any way we deem necessary. Any duplication is prohibited, unless approved in writing.

Мы молодая и активно развивающаяся компания в области поставок электронных компонентов. Мы поставляем электронные компоненты отечественного и импортного производства напрямую от производителей и с крупнейших складов мира.

Благодаря сотрудничеству с мировыми поставщиками мы осуществляем комплексные и плановые поставки широчайшего спектра электронных компонентов.

Собственная эффективная логистика и склад в обеспечивает надежную поставку продукции в точно указанные сроки по всей России.

Мы осуществляем техническую поддержку нашим клиентам и предпродажную проверку качества продукции. На все поставляемые продукты мы предоставляем гарантию .

Осуществляем поставки продукции под контролем ВП МО РФ на предприятия военно-промышленного комплекса России , а также работаем в рамках 275 ФЗ с открытием отдельных счетов в уполномоченном банке. Система менеджмента качества компании соответствует требованиям ГОСТ ISO 9001.

Минимальные сроки поставки, гибкие цены, неограниченный ассортимент и индивидуальный подход к клиентам являются основой для выстраивания долгосрочного и эффективного сотрудничества с предприятиями радиоэлектронной промышленности, предприятиями ВПК и научно-исследовательскими институтами России.

С нами вы становитесь еще успешнее!

Наши контакты:

Телефон: +7 812 627 14 35

Электронная почта: sales@st-electron.ru

Адрес: 198099, Санкт-Петербург, Промышленная ул, дом № 19, литера Н, помещение 100-Н Офис 331