# 17H

D-Sub connectors - Stamped and Formed Contacts

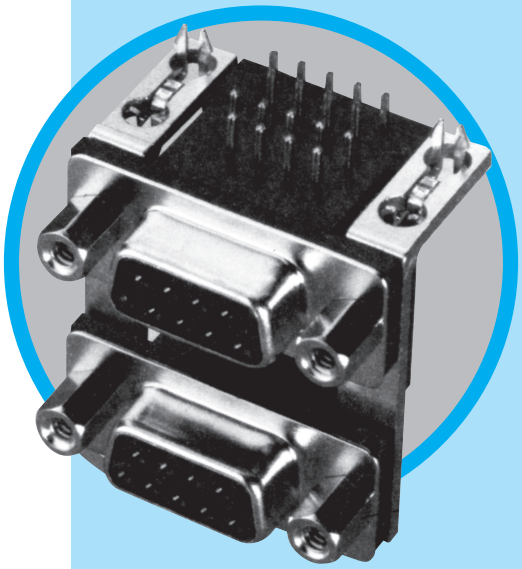

# DUAL PORT D-SUB CONNECTORS

MAIN CHARACTERISTICS

## Specifications

• Connectors according to MIL C24308

| Materials and platings | |
|---|---|
| Shells | Steel, tin plated |
| Insulator | Glass-filled thermoplastic, UL 94V-0 |
| Pin contacts | Brass, selected gold in mating area; 2.54µm (100µ") min. tin on termination area over 1.27µm (50µ") min. nickel |
| Socket contact | Phosphor bronze, selected gold in mating area; 2.54µm (100µ") min. tin on termination area over 1.27µm (50µ") min. nickel |
| Rear insert | Brass, 2.54µm (100µ") min. nickel plated |
| Boardlock | Phosphor bronze, 2.54µm (100µ") min. tin plated |
| Screwlock | Brass, 2.54µm (100µ") min. nickel plated |

| Electrical Data | |
|---|---|
| **Current rating** | 3A |
| **Voltage rating** | 250V AC/rms 60Hz |
| **Withstanding voltage** | 1000V AC/rms 60Hz for one minute |
| **Insulation resistance** | 1000MΩ |
| **Contact resistance** | 20mΩ max |

| Climatic Data | |
|---|---|
| **Operating temperature** | -55°C to +125°C |
| **Salt spray** | 24 hours |

**Mechanical Data**

**Single contact insertion force** 0.54kg (1.19lb) max
**Single contact withdrawal force** 0.06kg (0.13lb) min
**Mating and unmating force**
Unit: kg ( lb)

| No. of Cts | Mate (max) | Unmate (min) |
|---|---|---|
| 9 | 3.05 (6.74) | 0.36 (0.79) |
| 15 | 5.09 (11.24) | 0.46 (1.01) |
| 25 | 8.44 (18.66) | 0.81 (1.8) |
| 15 (Hi-den) | 3.81 (8.42) | 0.52 (1.14) |

**Standard plating thicknesses**
• gold flash
• 0.4µm (15µ") gold
• 0.76 µm (30µ") gold

DESCRIPTION

Amphenol's G17H dual port connectors are a state of the art design. The front metal shell helps reduce EMI / RFI emissions.

Designed to save PC board space, Amphenol 's dual port provides two I / O connectors in a minimal amount of board space.

*Economical dual port connectors*

APPLICATIONS

• **Industrial**
• **Telecom**
• **Any industry standard I / O connections**

17H / E13

Amphenol RoHS Compliant EU 2002/95/EC

Amphenol

# Shell size dimensions- standard and high density

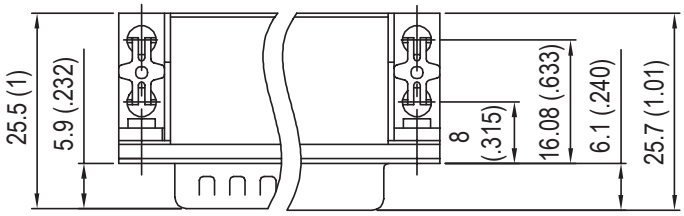


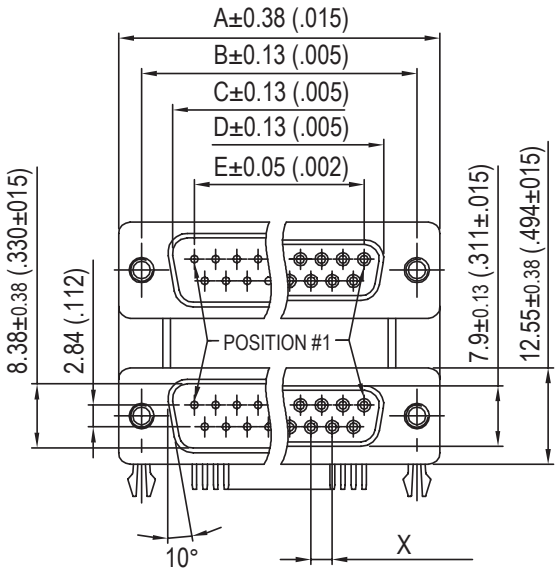


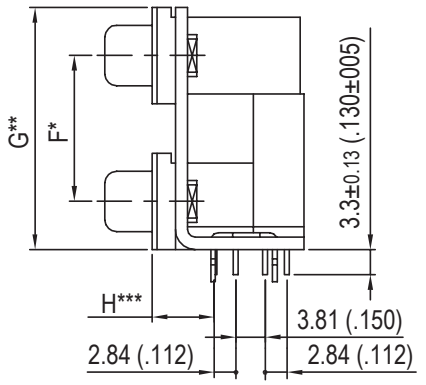


* spacing between ports (see "how to order" for dimensions)
** profile distance (see "how to order" for dimensions)
*** Footprint options (see "how to order" for dimensions)
H*** Standard Density (SD)
High Density (HD)
SD / SD = 8.08mm (.318")
SD / HD = 5.08mm (.200")
= 8.89mm (.350")
HD / HD = 8.89mm (.350")
= 5.08mm (.200")

**Recommended P.C.B. Layout**

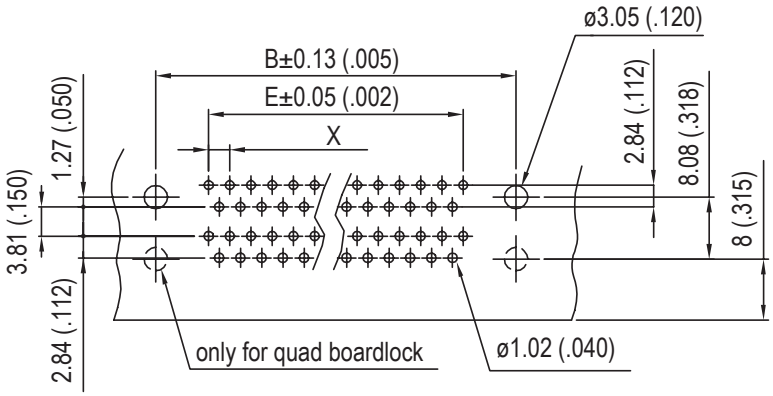


| Shell Size | Nb OF CONTACTS | DIMENSIONS mm (inch) | | | | |
|---|---|---|---|---|---|---|
| | | A | B | C PLUG | D SOCKET | E |
| E | 9/HD 15 | 30.84 (1.21) | 24.99 (.984) | 16.92 (.666) | 16.24 (.639) | 11.09 (.437) |
| A | 15/HD 26 | 39.24 (1.54) | 33.32 (1.31) | 24.7 (.972) | 24.56 (.967) | 19.39 (.763) |
| B | 25 | 53.04 (2.09) | 47.04 (1.85) | 38.96 (1.53) | 38.38 (1.51) | 33.24 (1.31) |
| E | 15 (Hi-den) | 30.84 (1.21) | 24.99 (.984) | 16.92 (.666) | 16.24 (.639) | 10.31 (.406) |
| C | 37 | 69.32 (2.73) | 63.50 (2.50) | 55.42 (2.18) | 54.76 (2.16) | 49.86 (1.96) |

# Panel mounting option

## Flange mounting options:

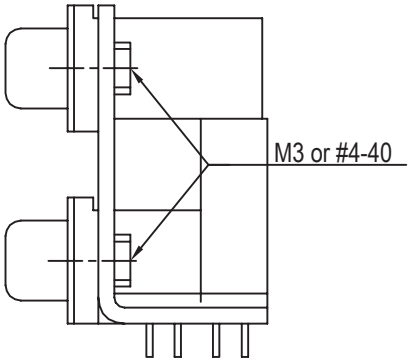


Threaded rear insert
**0 / 4**

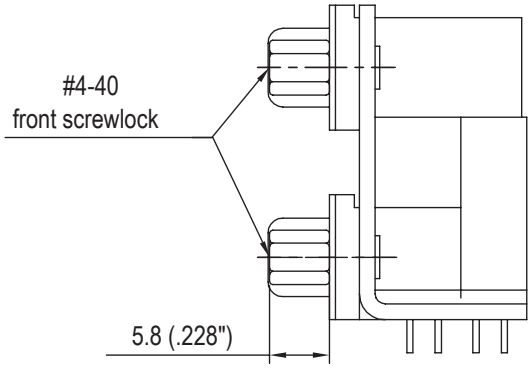


Fixed front female screwlock
**7**

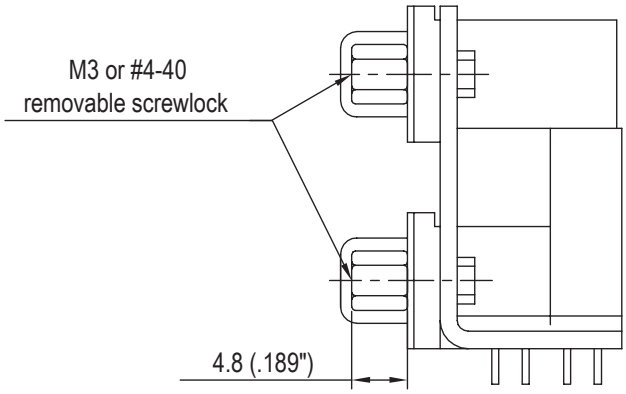


Removable female screwlock
**1 / 5**

## Board mounting options:

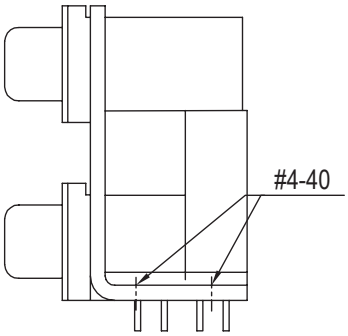


Threaded hole
**1**

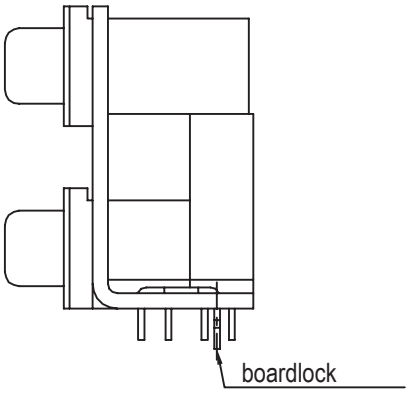


Dual arrowhead boardlock
**2**

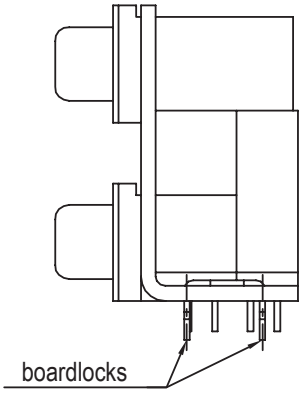


Quad arrowhead boardlock
**3**

NOTES

# Dual Port Connectors

**L17H X X X X X X X X**

### Spacing Between Ports

1 - **F** = 15.88mm (.625")
**G** = 28.42mm (1.12")
2 - **F** = 19.05mm (.750")
**G** = 31.60mm (1.24")
3 - **F** = 22.86mm (.900")
**G** = 35.41mm (1.39")
4 - **SCSI**
**G** = 12.80mm (.504")
7 - **F** = 20.70mm (..815")
**G** = 32.20mm (1.26")

### Top Connector

**1** = 9 Pos. Male
**2** = 9 Pos. Female
**3** = 15 Pos. Male
**4** = 15 Pos. Female
**5** = 25 Pos. Male
**6** = 25 Pos. Female
**7** = 15 Pos. High Density Female
**8** = 50 Pos. Female SCSI
**9** = 26 Pos. High Density Female
**J** = 15 Pos. High Density Male
**D** = 37 Pos. Male
**E** = 37 Pos. Female
**F** = 44 Pos. High Density Male
**G** = 44 Pos. High Density Female
**M** = 62 Pos. High Density Male
**N** = 62 Pos. High Density Female
**P** = 78 Pos. High Density Male
**Q** = 78 Pos. High Density Female

### Bottom Connector

**1** = 9 Pos. Male
**2** = 9 Pos. Female
**3** = 15 Pos. Male
**4** = 15 Pos. Female
**5** = 25 Pos. Male
**6** = 25 Pos. Female
**7** = 15 Pos. High Density Female
**8** = 50 Pos. Female SCSI
**9** = 26 Pos. High Density Female
**K** = 15 Pos. High Density Male
**D** = 37 Pos. Male
**E** = 37 Pos. Female
**F** = 44 Pos. High Density Male
**G** = 44 Pos. High Density Female
**M** = 62 Pos. High Density Male
**N** = 62 Pos. High Density Female
**P** = 78 Pos. High Density Male
**Q** = 78 Pos. High Density Female
**R** = 9 Pos. Male + 9 Pos. Male
**S** = 9 Pos. Female + 9 Pos. Female

### Footprint Options

**SD / SD**
**BLANK** = 8.08mm (.318")
**SD / HD**
**BLANK** = 5.08mm (.200")
**889** = 8.89mm (.350")
**HD / HD**
**BLANK** = 8.89mm (.350")
**508** = 5.08mm (.200")

### Flange Mounting Options

**0** = 4-40unc Rear Insert
**1** = 4-40unc Removable Screwlock
**3** = 3.05mm (.120") Clear Hole
**4** = M3 Rear Insert
**5** = M3 Removable Screwlock
**7** = 4-40unc Fixed Front Screwlock

### Board Mounting Options

**0** = Triple Arrowhead Boardlock
**1** = 4 * Threaded 4-40unc Inserts
**2** = Dual Arrowhead Boardlocks
**3** = Quad Arrowhead Boardlocks
**4** = 3.18mm (.125") Clear Hole

### Shell Plating

**1** = Bright Tin / Nickel
**2** = Nickel

### Contact Plating

**0** = Flash Fold
**1** = 0.4µm (15µ") Gold
**2** = 0.76µm (30µ") Gold
**3** = Full Flash Gold
**4** = 1.27µ" (50µ") Gold

***For special request, please consult factory***

**Do not hesitate to contact us for further information**


Amphenol

**Amphenol IT & Communication Products**
Block A3/A4, The 4th Industrial District of
Industrial Headquarters, Dong Keng Road
Gong Ming Town, Shen Zhen China
Fax:+86(0)755 2754 9955

***Technical Support***
Tel:+86(0)755 2717 7945
Info-dsub@amphenol.com.cn
http://www.dsubconnector.com



The information given in this document are as a guideline only. We reserve the right to modify our products in any way we deem necessary. Any duplication is prohibited, unless approved in writing.

Мы молодая и активно развивающаяся компания в области поставок электронных компонентов. Мы поставляем электронные компоненты отечественного и импортного производства напрямую от производителей и с крупнейших складов мира.

Благодаря сотрудничеству с мировыми поставщиками мы осуществляем комплексные и плановые поставки широчайшего спектра электронных компонентов.

Собственная эффективная логистика и склад в обеспечивает надежную поставку продукции в точно указанные сроки по всей России.

Мы осуществляем техническую поддержку нашим клиентам и предпродажную проверку качества продукции. На все поставляемые продукты мы предоставляем гарантию .

Осуществляем поставки продукции под контролем ВП МО РФ на предприятия военно-промышленного комплекса России , а также работаем в рамках 275 ФЗ с открытием отдельных счетов в уполномоченном банке. Система менеджмента качества компании соответствует требованиям ГОСТ ISO 9001.

Минимальные сроки поставки, гибкие цены, неограниченный ассортимент и индивидуальный подход к клиентам являются основой для выстраивания долгосрочного и эффективного сотрудничества с предприятиями радиоэлектронной промышленности, предприятиями ВПК и научно-исследовательскими институтами России.

С нами вы становитесь еще успешнее!

**Наши контакты:**

**Телефон:** +7 812 627 14 35

**Электронная почта:** sales@st-electron.ru

**Адрес:** 198099, Санкт-Петербург, Промышленная ул, дом № 19, литера Н, помещение 100-Н Офис 331