Operational Amplifiers

Input/Output Full Swing Low Voltage Operating CMOS Operational Amplifiers

BU7261G BU7261SG BU7262xxx BU7262Sxxx BU7264xx BU7264Sxx

General Description

BU7261G,BU7262xxx,BU7264xx are CMOS operational amplifier of the input/output full swing low voltage operation. Also, BU7261SG,BU7262Sxxx,BU7264Sxx which expanded the operating temperature range perform a lineup. It is most suitable for a sensor amplifier and a battery-powered equipment to have a high slew rate, the characteristic of the low input bias current.

Features

- Operable with Low Voltage
- Input-Output Full Swing
- High Slew Rate
- Wide Temperature Range
- Low Input Bias Current

Applications

- Sensor Amplifier
- Battery-powered Equipment
- Portable Equipment
- Consumer Equipment

Key Specifications

- Operating Supply Voltage Range(Single Supply): +1.8V to +5.5V
- Operating Temperature Range:
  BU7261G, BU7262xxx, BU7264xx: -40°C to +85°C
  BU7261SG, BU7262Sxxx, BU7264Sxx: -40°C to +105°C
- Slew Rate: 1.1 V/μs(Typ)
- Input Offset Current: 1pA (Typ)
- Input Bias Current: 1pA (Typ)

Packages

	W(Typ) x D(Typ) x H(Max)
SSOP5	2.90mm x 2.80mm x 1.25mm
SOP8	5.00mm x 6.20mm x 1.71mm
MSOP8	2.90mm x 4.00mm x 0.90mm
VSON008X2030	2.00mm x 3.00mm x 0.60mm
SOP14	8.70mm x 6.20mm x 1.71mm
SSOP-B14	5.00mm x 6.40mm x 1.35mm

Simplified Schematic

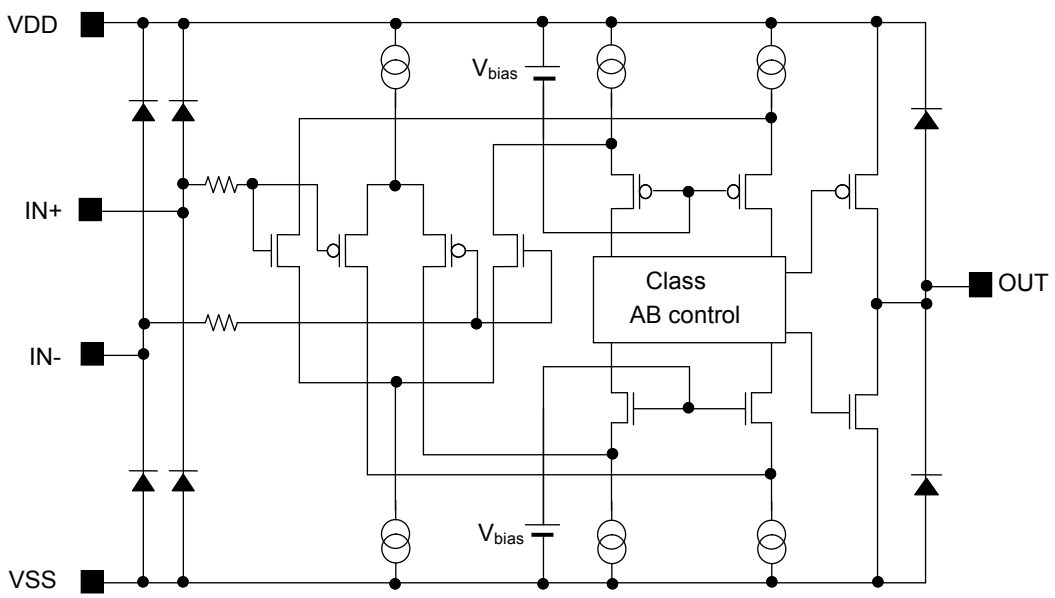

Figure 1. Simplified Schematic (1 channel only)

○Product structure : Silicon monolithic integrated circuit ○This product has no designed protection against radioactive rays.

© 2013 ROHM Co., Ltd. All rights reserved.

Pin Configuration

BU7261G, BU7261SG : SSOP5

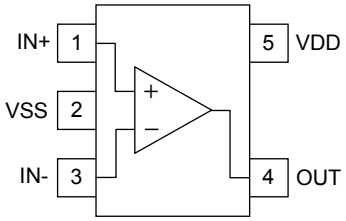

Pin No.	Pin Name
1	IN+
2	VSS
3	IN-
4	OUT
5	VDD

BU7262F, BU7262SF : SOP8
BU7262FVM, BU7262SFVM : MSOP8
BU7262NUX, BU7262SNUX : VSON008X2030

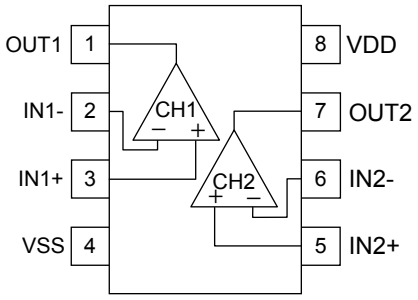

Pin No.	Pin Name
1	OUT1
2	IN1-
3	IN1+
4	VSS
5	IN2+
6	IN2-
7	OUT2
8	VDD

BU7264F, BU7264SF : SOP14
BU7264FV, BU7264SFV : SSOP-B14

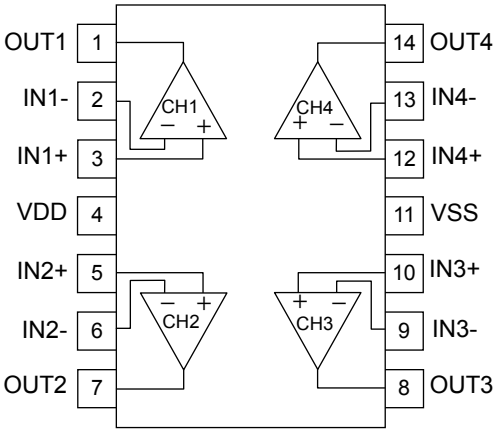

Pin No.	Pin Name
1	OUT1
2	IN1-
3	IN1+
4	VDD
5	IN2+
6	IN2-
7	OUT2
8	OUT3
9	IN3-
10	IN3+
11	VSS
12	IN4+
13	IN4-
14	OUT4

Package					
SSOP5	SOP8	VSON008X2030	MSOP8	SOP14	SSOP-B14
BU7261G BU7261SG	BU7262F BU7262SF	BU7262NUX BU7262SNUX	BU7262FVM BU7262SFVM	BU7264F BU7264SF	BU7264FV BU7264SFV

© 2013 ROHM Co., Ltd. All rights reserved.

Ordering Information

B U 7 2 6 x x x x x - x x

Part Number
BU7261G
BU7261SG
BU7262xxx
BU7262Sxxx
BU7264xx
BU7264Sxx

Package
G : SSOP5
F : SOP8, SOP14
FV : SSOP-B14
FVM : MSOP8
NUX : VSON008X2030

Packaging and forming specification
E2: Embossed tape and reel
(SOP8/SOP14/SSOP-B14)
TR: Embossed tape and reel
(SSOP5/MSOP8/VSON008X2030)

Line-up

T_{opr}	Channels	Package		Orderable Part Number
-40°C to +85°C	1ch	SSOP5	Reel of 3000	BU7261G-TR
	2ch	SOP8	Reel of 2500	BU7262F-E2
		MSOP8	Reel of 3000	BU7262FVM-TR
		VSON008X2030	Reel of 4000	BU7262NUX-TR
	4ch	SOP14	Reel of 2500	BU7264F-E2
		SSOP-B14	Reel of 2500	BU7264FV-E2
-40°C to +105°C	1ch	SSOP5	Reel of 3000	BU7261SG-TR
	2ch	SOP8	Reel of 2500	BU7262SF-E2
		MSOP8	Reel of 3000	BU7262SFVM-TR
		VSON008X2030	Reel of 4000	BU7262SNUX-TR
	4ch	SOP14	Reel of 2500	BU7264SF-E2
		SSOP-B14	Reel of 2500	BU7264SFV-E2

© 2013 ROHM Co., Ltd. All rights reserved.

Absolute Maximum Ratings (T_A=25℃)

○BU7261G, BU7262xxx, BU7264xx

Parameter	Symbol		Rating			Unit
			BU7261G	BU7262xxx	BU7264xx	
Supply Voltage	VDD-VSS		+7			V
Power Dissipation	P_D	SSOP5	0.54(Note 1,7)	-	-	W
		SOP8	-	0.55(Note 2,7)	-	
		MSOP8	-	0.47(Note 3,7)	-	
		VSON008X2030	-	0.41(Note 4,7)	-	
		SOP14	-	-	0.45(Note 5,7)	
		SSOP-B14			0.70(Note 6,7)	
Differential Input Voltage (Note 8)	V_{ID}		VDD - VSS			V
Input Common-mode Voltage Range	V_{ICM}		(VSS - 0.3) to (VDD + 0.3)			V
Input Current (Note 9)	I_I		±10			mA
Operating Supply Voltage	V_{opr}		+1.8 to +5.5			V
Operating Temperature	T_{opr}		-40 to +85			°C
Storage Temperature	T_{stg}		-55 to +125			°C
Maximum Junction Temperature	T_{Jmax}		+125			°C

(Note 1) To use at temperature above T_A=25°C reduce 5.4mW/°C.
(Note 2) To use at temperature above T_A=25°C reduce 5.5mW/°C.
(Note 3) To use at temperature above T_A=25°C reduce 4.7mW/°C.
(Note 4) To use at temperature above T_A=25°C reduce 4.1mW/°C.
(Note 5) To use at temperature above T_A=25°C reduce 4.5mW/°C.
(Note 6) To use at temperature above T_A=25°C reduce 7.0mW/°C.
(Note 7) Mounted on a FR4 glass epoxy PCB 70mm×70mm×1.6mm (Copper foil area less than 3%).
(Note 8) The voltage difference between inverting input and non-inverting input is the differential input voltage.
Then input pin voltage is set to more than VSS.
(Note 9) An excessive input current will flow when input voltages of more than VDD+0.6V or less than VSS-0.6V are applied.
The input current can be set to less than the rated current by adding a limiting resistor.
Caution: Operating the IC over the absolute maximum ratings may damage the IC. The damage can either be a short circuit between pins or an open circuit between pins and the internal circuitry. Therefore, it is important to consider circuit protection measures, such as adding a fuse, in case the IC is operated over the absolute maximum ratings.

© 2013 ROHM Co., Ltd. All rights reserved.

Absolute Maximum Ratings (T_A=25℃)**- continued**

○BU7261SG, BU7262Sxxx, BU7264Sxx

Parameter	Symbol		Rating			Unit
			BU7261SG	BU7262Sxxx	BU7264Sxx	
Supply Voltage	VDD-VSS		+7			V
Power Dissipation	P_D	SSOP5	0.54 (Note 10,16)	-	-	W
		SOP8	-	0.55 (Note 11,16)	-	
		MSOP8	-	0.47 (Note 12,16)	-	
		VSON008X2030	-	0.41 (Note 13,16)	-	
		SOP14	-	-	0.45 (Note 14,16)	
		SSOP-B14			0.70 (Note 15,16)	
Differential Input Voltage (Note 17)	V_{ID}		VDD - VSS			V
Input Common-mode Voltage Range	V_{ICM}		(VSS - 0.3) to (VDD + 0.3)			V
Input Current (Note 18)	I_I		±10			mA
Operating Supply Voltage	V_{opr}		+1.8 to +5.5			V
Operating Temperature	T_{opr}		-40 to +105			°C
Storage Temperature	T_{stg}		-55 to +125			°C
Maximum Junction Temperature	T_{Jmax}		+125			°C

(Note 10) To use at temperature above T_A=25°C reduce 5.4mW/°C.
(Note 11) To use at temperature above T_A=25°C reduce 5.5mW/°C.
(Note 12) To use at temperature above T_A=25°C reduce 4.7mW/°C.
(Note 13) To use at temperature above T_A=25°C reduce 4.1mW/°C.
(Note 14) To use at temperature above T_A=25°C reduce 4.5mW/°C.
(Note 15) To use at temperature above T_A=25°C reduce 7.0mW/°C.
(Note 16) Mounted on a FR4 glass epoxy PCB 70mm×70mm×1.6mm (Copper foil area less than 3%).
(Note 17) The voltage difference between inverting input and non-inverting input is the differential input voltage.
Then input pin voltage is set to more than VSS.
(Note 18) An excessive input current will flow when input voltages of more than VDD+0.6V or less than VSS-0.6V are applied.
The input current can be set to less than the rated current by adding a limiting resistor.
Caution: Operating the IC over the absolute maximum ratings may damage the IC. The damage can either be a short circuit between pins or an open circuit between pins and the internal circuitry. Therefore, it is important to consider circuit protection measures, such as adding a fuse, in case the IC is operated over the absolute maximum ratings.

© 2013 ROHM Co., Ltd. All rights reserved.

Electrical Characteristics

○BU7261G, BU7261SG (Unless otherwise specified VDD=+3V, VSS=0V, T_A=25℃)

Parameter	Symbol	Temperature Range	Limit			Unit	Conditions
			Min	Typ	Max		
Input Offset Voltage (Note 19, 20)	V_{IO}	25℃	-	1	9	mV	VDD=1.8 to 5.5V
		Full range	-	-	10		
Input Offset Current (Note 19)	I_{IO}	25℃	-	1	-	pA	-
Input Bias Current (Note 19)	I_B	25℃	-	1	-	pA	-
Supply Current (Note 20)	I_{DD}	25℃	-	250	550	μA	R_L=∞ A_V=0dB, IN+=1.5V
		Full range	-	-	600		
Maximum Output Voltage(High)	V_{OH}	25℃	VDD-0.1	-	-	V	R_L=10kΩ
Maximum Output Voltage(Low)	V_{OL}	25℃	-	-	VSS+0.1	V	R_L=10kΩ
Large Signal Voltage Gain	A_V	25℃	70	95	-	dB	R_L=10kΩ
Input Common-mode Voltage Range	V_{ICM}	25℃	0	-	3	V	VSS - VDD
Common-mode Rejection Ratio	CMRR	25℃	45	60	-	dB	-
Power Supply Rejection Ratio	PSRR	25℃	60	80	-	dB	-
Output Source Current (Note 21)	I_{SOURCE}	25℃	4	10	-	mA	OUT=VDD-0.4V
Output Sink Current (Note 21)	I_{SINK}	25℃	5	12	-	mA	OUT=VSS+0.4V
Slew Rate	SR	25℃	-	1.1	-	V/μs	C_L=25pF
Gain Bandwidth	GBW	25℃	-	2	-	MHz	C_L=25pF, A_V=40dB
Phase Margin	θ	25℃	-	50	-	deg	C_L=25pF, A_V=40dB
Total Harmonic Distortion + Noise	THD+N	25℃	-	0.05	-	%	OUT=0.8V_{P-P}, f=1kHz

(Note 19) Absolute value
(Note 20) Full range: BU7261: T_A=-40℃ to +85℃ BU7261S: T_A=-40℃ to +105℃
(Note 21) Under the high temperature environment, consider the power dissipation of IC when selecting the output current.
When the terminal short circuits are continuously output, the output current is reduced to climb to the temperature inside IC.

© 2013 ROHM Co., Ltd. All rights reserved.

Electrical Characteristics - continued

○BU7262xxx, BU7262Sxxx (Unless otherwise specified VDD=+3V, VSS=0V, T_A=25℃)

Parameter	Symbol	Temperature Range	Limit			Unit	Conditions
			Min	Typ	Max		
Input Offset Voltage (Note 22, 23)	V_{IO}	25℃	-	1	9	mV	VDD=1.8 to 5.5V
		Full range	-	-	10		
Input Offset Current (Note 22)	I_{IO}	25℃	-	1	-	pA	-
Input Bias Current (Note 22)	I_B	25℃	-	1	-	pA	-
Supply Current (Note 23)	I_{DD}	25℃	-	550	1100	μA	R_L=∞, All Op-Amps A_V=0dB, IN+=1.5V
		Full range	-	-	1200		
Maximum Output Voltage(High)	V_{OH}	25℃	VDD-0.1	-	-	V	R_L=10kΩ
Maximum Output Voltage(Low)	V_{OL}	25℃	-	-	VSS+0.1	V	R_L=10kΩ
Large Signal Voltage Gain	A_V	25℃	70	95	-	dB	R_L=10kΩ
Input Common-mode Voltage Range	V_{ICM}	25℃	0	-	3	V	VSS - VDD
Common-mode Rejection Ratio	CMRR	25℃	45	60	-	dB	-
Power Supply Rejection Ratio	PSRR	25℃	60	80	-	dB	-
Output Source Current (Note 24)	I_{SOURCE}	25℃	4	10	-	mA	OUT=VDD-0.4V
Output Sink Current (Note 24)	I_{SINK}	25℃	5	12	-	mA	OUT=VSS+0.4V
Slew Rate	SR	25℃	-	1.1	-	V/μs	C_L=25pF
Gain Bandwidth	GBW	25℃	-	2	-	MHz	C_L=25pF, A_V=40dB
Phase Margin	θ	25℃	-	50	-	deg	C_L=25pF, A_V=40dB
Total Harmonic Distortion + Noise	THD+N	25℃	-	0.05	-	%	OUT=0.8V_{P-P}, f=1kHz
Channel Separation	CS	25℃	-	100	-	dB	A_V=40dB, OUT=1Vrms

(Note 22) Absolute value
(Note 23) Full range: BU7262: T_A=-40℃ to +85℃ BU7262S: T_A=-40℃ to +105℃
(Note 24) Under the high temperature environment, consider the power dissipation of IC when selecting the output current.
When the terminal short circuits are continuously output, the output current is reduced to climb to the temperature inside IC.

© 2013 ROHM Co., Ltd. All rights reserved.

Electrical Characteristics - continued

○BU7264xx, BU7264Sxx (Unless otherwise specified VDD=+3V, VSS=0V, T_A=25℃)

Parameter	Symbol	Temperature Range	Limit			Unit	Conditions
			Min	Typ	Max		
Input Offset Voltage (Note 25, 26)	V_{IO}	25℃	-	1	9	mV	VDD=1.8 to 5.5V
		Full range	-	-	10		
Input Offset Current (Note 25)	I_{IO}	25℃	-	1	-	pA	-
Input Bias Current (Note 25)	I_B	25℃	-	1	-	pA	-
Supply Current (Note 26)	I_{DD}	25℃	-	1100	2300	μA	R_L=∞, All Op-Amps A_V=0dB, IN+=1.5V
		Full range	-	-	2800		
Maximum Output Voltage(High)	V_{OH}	25℃	VDD-0.1	-	-	V	R_L=10kΩ
Maximum Output Voltage(Low)	V_{OL}	25℃	-	-	VSS+0.1	V	R_L=10kΩ
Large Signal Voltage Gain	A_V	25℃	70	95	-	dB	R_L=10kΩ
Input Common-mode Voltage Range	V_{ICM}	25℃	0	-	3	V	VSS - VDD
Common-mode Rejection Ratio	CMRR	25℃	45	60	-	dB	-
Power Supply Rejection Ratio	PSRR	25℃	60	80	-	dB	-
Output Source Current (Note 27)	I_{SOURCE}	25℃	4	10	-	mA	OUT=VDD-0.4V
Output Sink Current (Note 27)	I_{SINK}	25℃	5	12	-	mA	OUT=VSS+0.4V
Slew Rate	SR	25℃	-	1.1	-	V/μs	C_L=25pF
Gain Bandwidth	GBW	25℃	-	2	-	MHz	C_L=25pF, A_V=40dB
Phase Margin	θ	25℃	-	50	-	deg	C_L=25pF, A_V=40dB
Total Harmonic Distortion + Noise	THD+N	25℃	-	0.05	-	%	OUT=0.8V_{P-P}, f=1kHz
Channel Separation	CS	25℃	-	100	-	dB	A_V=40dB, OUT=1Vrms

(Note 25) Absolute value
(Note 26) Full range: BU7264: T_A=-40℃ to +85℃ BU7264S: T_A=-40℃ to +105℃
(Note 27) Under the high temperature environment, consider the power dissipation of IC when selecting the output current.
When the terminal short circuits are continuously output, the output current is reduced to climb to the temperature inside IC.

© 2013 ROHM Co., Ltd. All rights reserved.

Description of electrical characteristics

Described below are descriptions of the relevant electrical terms used in this datasheet. Items and symbols used are also shown. Note that item name and symbol and their meaning may differ from those on another manufacturer's document or general document.

1. Absolute maximum ratings

Absolute maximum rating items indicate the condition which must not be exceeded. Application of voltage in excess of absolute maximum rating or use out of absolute maximum rated temperature environment may cause deterioration of characteristics.

(1) Supply Voltage (VDD/VSS)
Indicates the maximum voltage that can be applied between the VDD terminal and VSS terminal without deterioration or destruction of characteristics of internal circuit.

(2) Differential Input Voltage (V_{ID})
Indicates the maximum voltage that can be applied between non-inverting and inverting terminals without damaging the IC.

(3) Input Common-mode Voltage Range (V_{ICM})
Indicates the maximum voltage that can be applied to the non-inverting and inverting terminals without deterioration or destruction of electrical characteristics. Input common-mode voltage range of the maximum ratings does not assure normal operation of IC. For normal operation, use the IC within the input common-mode voltage range characteristics.

(4) Power Dissipation (P_D)
Indicates the power that can be consumed by the IC when mounted on a specific board at the ambient temperature 25℃ (normal temperature). As for package product, P_D is determined by the temperature that can be permitted by the IC in the package (maximum junction temperature) and the thermal resistance of the package.

2. Electrical characteristics

(1) Input Offset Voltage (V_{IO})
Indicates the voltage difference between non-inverting terminal and inverting terminals. It can be translated into the input voltage difference required for setting the output voltage at 0 V.

(2) Input Offset Current (I_{IO})
Indicates the difference of input bias current between the non-inverting and inverting terminals.

(3) Input Bias Current (I_B)
Indicates the current that flows into or out of the input terminal. It is defined by the average of input bias currents at the non-inverting and inverting terminals.

(4) Supply Current (I_{DD})
Indicates the current that flows within the IC under specified no-load conditions.

(5) Maximum Output Voltage(High) / Maximum Output Voltage(Low) (V_{OH}/V_{OL})
Indicates the voltage range of the output under specified load condition. It is typically divided into maximum output voltage high and low. Maximum output voltage high indicates the upper limit of output voltage. Maximum output voltage low indicates the lower limit.

(6) Large Signal Voltage Gain (A_V)
Indicates the amplifying rate (gain) of output voltage against the voltage difference between non-inverting terminal and inverting terminal. It is normally the amplifying rate (gain) with reference to DC voltage.
Av = (Output voltage) / (Differential Input voltage)

(7) Input Common-mode Voltage Range (V_{ICM})
Indicates the input voltage range where IC normally operates.

(8) Common-mode Rejection Ratio (CMRR)
Indicates the ratio of fluctuation of input offset voltage when the input common mode voltage is changed. It is normally the fluctuation of DC.
CMRR = (Change of Input common-mode voltage)/(Input offset fluctuation)

(9) Power Supply Rejection Ratio (PSRR)
Indicates the ratio of fluctuation of input offset voltage when supply voltage is changed.
It is normally the fluctuation of DC.
PSRR = (Change of power supply voltage)/(Input offset fluctuation)

(10) Output Source Current / Output Sink Current (I_{SOURCE}/I_{SINK})
The maximum current that can be output under specific output conditions, it is divided into output source current and output sink current. The output source current indicates the current flowing out of the IC, and the output sink current the current flowing into the IC.

(11) Slew Rate (SR)
Indicates the ratio of the change in output voltage with time when a step input signal is applied.

(12) Gain Bandwidth (GBW)
The product of the open-loop voltage gain and the frequency at which the voltage gain decreases 6dB/octave.

© 2013 ROHM Co., Ltd. All rights reserved.

(13) Phase Margin (θ)
Indicates the margin of phase from 180 degree phase lag at unity gain frequency.

(14) Total Harmonic Distortion + Noise (THD+N)
Indicates the fluctuation of input offset voltage or that of output voltage with reference to the change of output voltage of driven channel.

(15) Channel Separation (CS)
Indicates the fluctuation in the output voltage of the driven channel with reference to the change of output voltage of the channel which is not driven.

© 2013 ROHM Co., Ltd. All rights reserved.

Typical Performance Curves

○BU7261G, BU7261SG

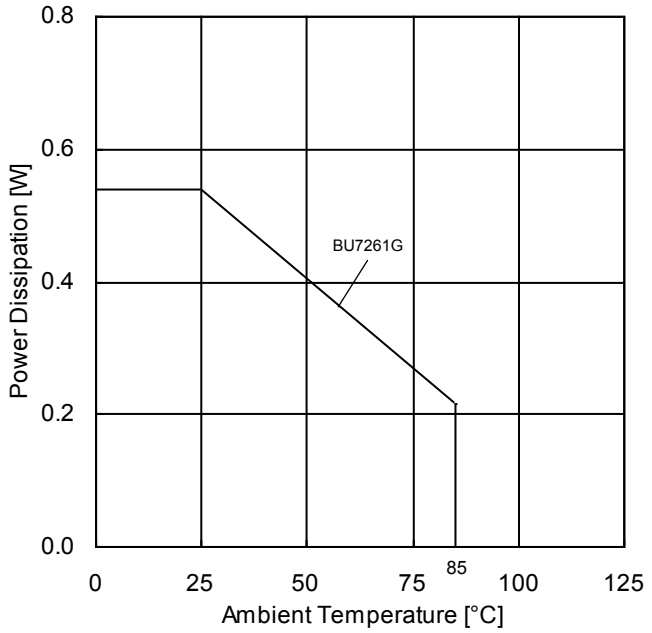

Figure 2.
Power Dissipation vs Ambient Temperature
(Derating Curve)

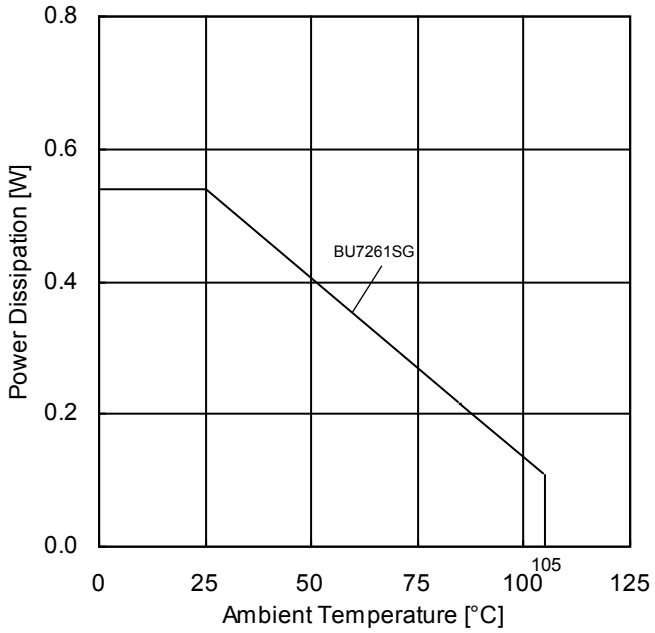

Figure 3.
Power Dissipation vs Ambient Temperature
(Derating Curve)

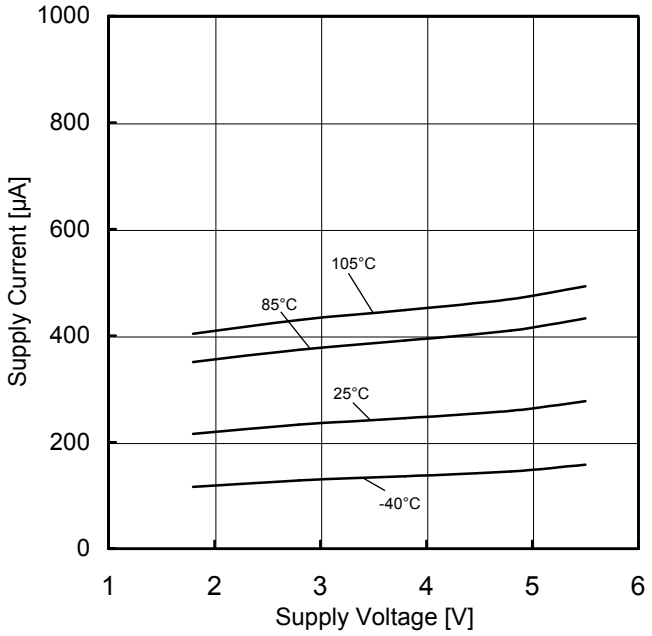

Figure 4.
Supply Current vs Supply Voltage

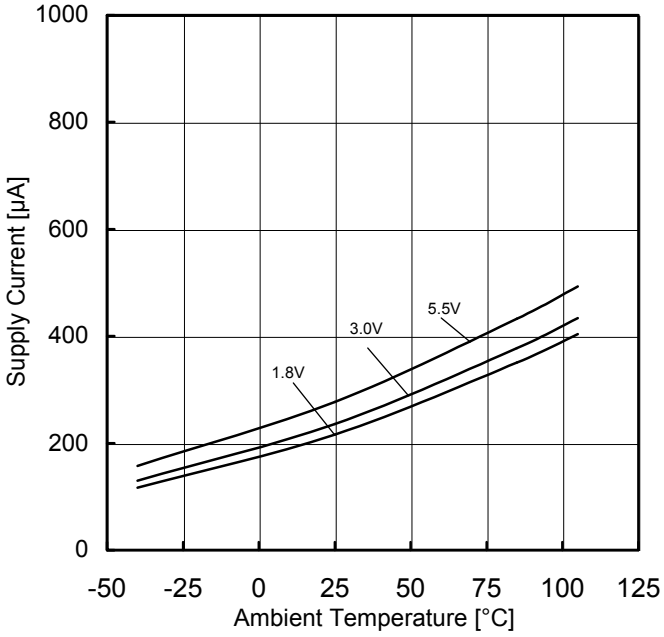

Figure 5.
Supply Current vs Ambient Temperature

(*)The above characteristics are measurements of typical sample, they are not guaranteed.
BU7261G: -40℃ to +85℃ BU7261SG: -40℃ to +105℃

© 2013 ROHM Co., Ltd. All rights reserved.

Typical Performance Curves - Continued

○BU7261G, BU7261SG

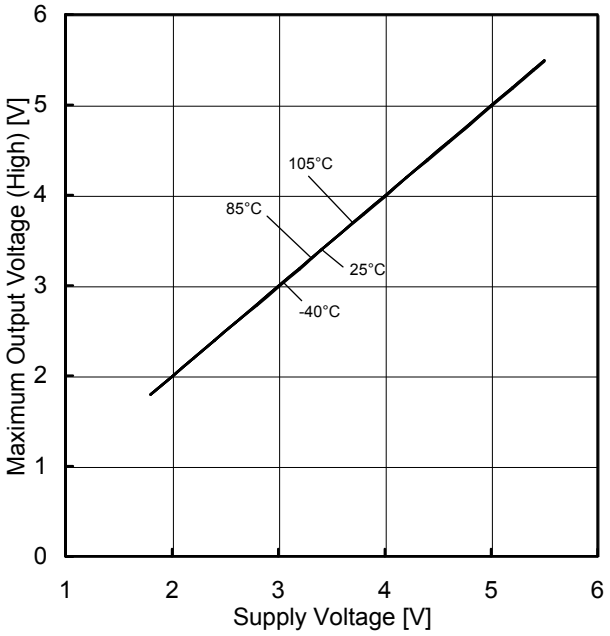

Figure 6.
Maximum Output Voltage (High) vs Supply Voltage
(R_L=10kΩ)

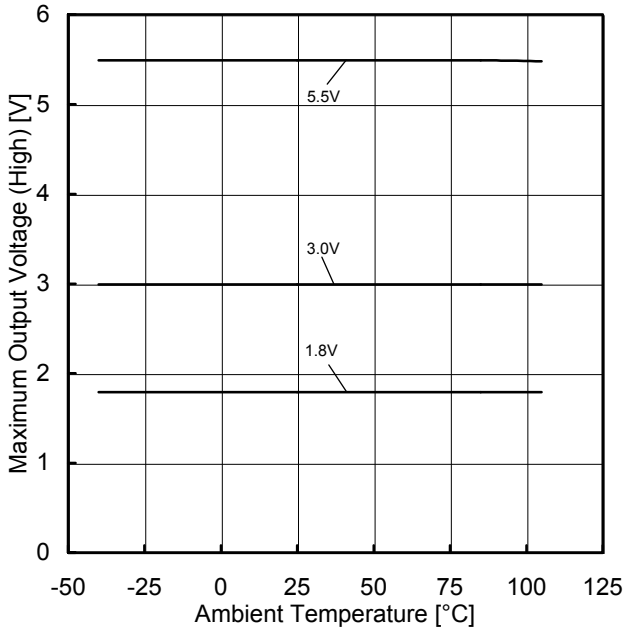

Figure 7.
Maximum Output Voltage (High) vs Ambient Temperature
(R_L=10kΩ)

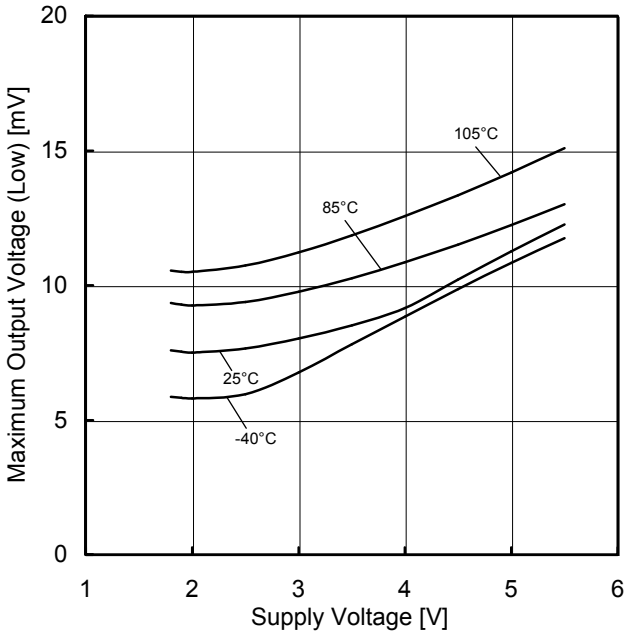

Figure 8.
Maximum Output Voltage (Low) vs Supply Voltage
(R_L=10kΩ)

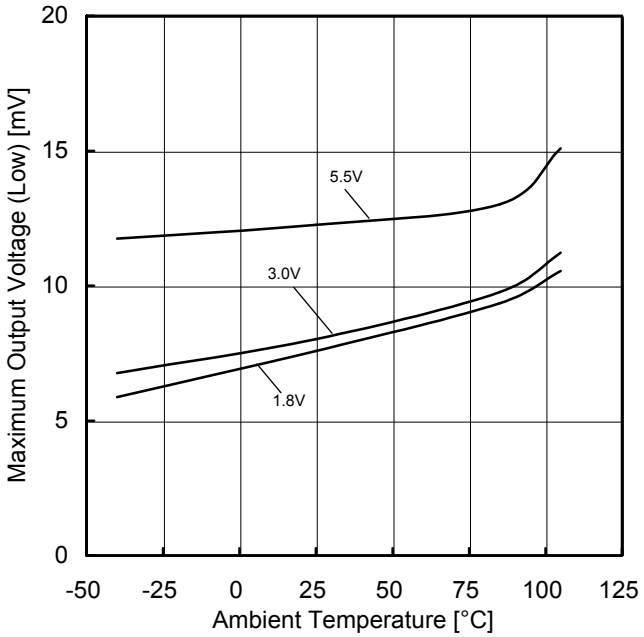

Figure 9.
Maximum Output Voltage (Low) vs Ambient Temperature
(R_L=10kΩ)

(*)The above characteristics are measurements of typical sample, they are not guaranteed.
BU7261G: -40℃ to +85℃ BU7261SG: -40℃ to +105℃

© 2013 ROHM Co., Ltd. All rights reserved.

Typical Performance Curves - Continued

○BU7261G, BU7261SG

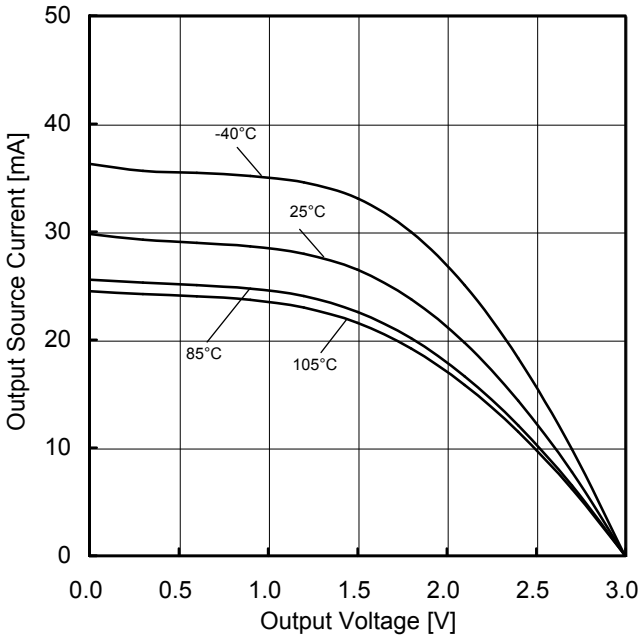

Figure 10.
Output Source Current vs Output Voltage
(VDD=3V)

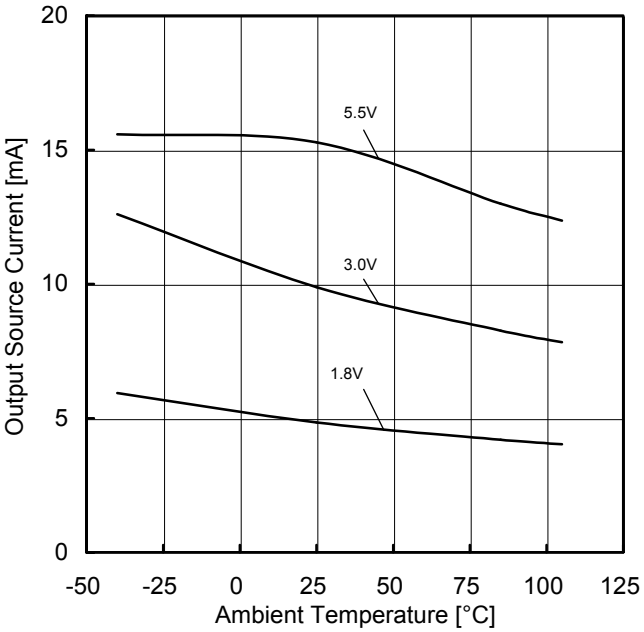

Figure 11.
Output Source Current vs Ambient Temperature
(OUT=VDD-0.4V)

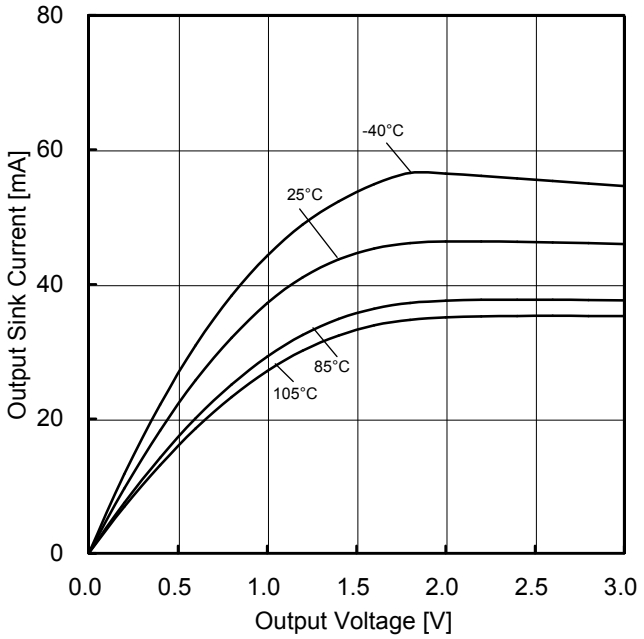

Figure 12.
Output Sink Current vs Output Voltage
(VDD=3V)

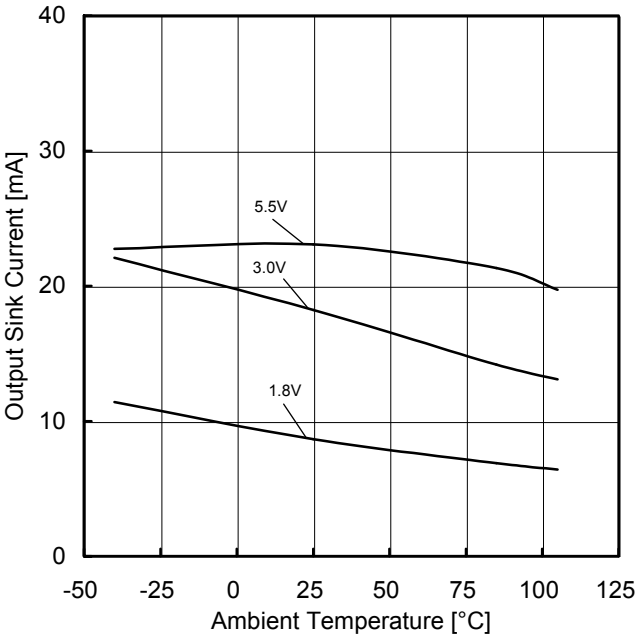

Figure 13.
Output Sink Current vs Ambient Temperature
(OUT=VSS+0.4V)

(*)The above characteristics are measurements of typical sample, they are not guaranteed.
BU7261G: -40℃ to +85℃ BU7261SG: -40℃ to +105℃

© 2013 ROHM Co., Ltd. All rights reserved.

Typical Performance Curves - Continued

○BU7261G, BU7261SG

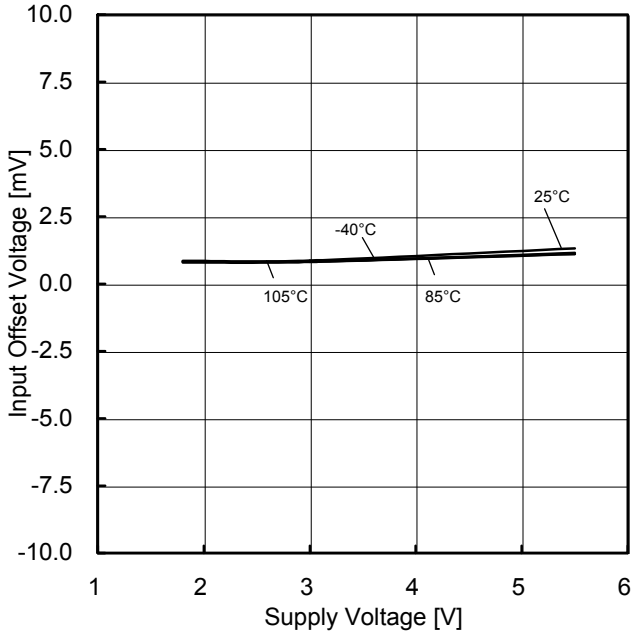

Figure 14.
Input Offset Voltage vs Supply Voltage
(V_{ICM}=VDD, E_K=-VDD/2)

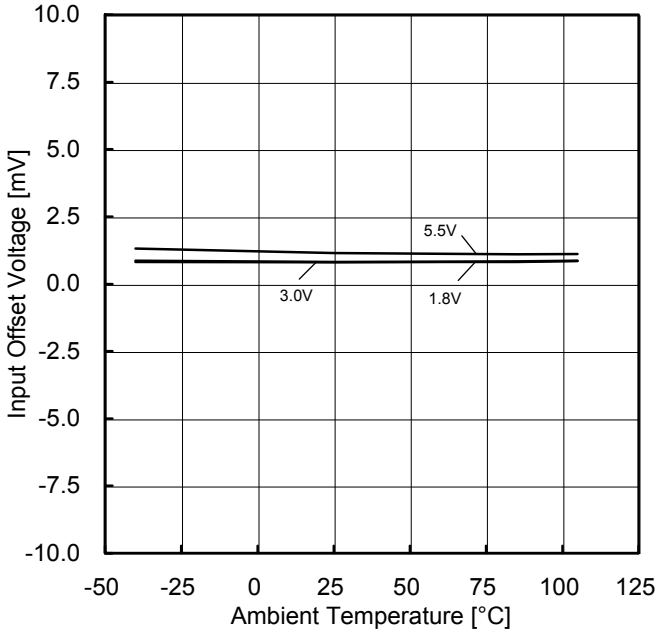

Figure 15.
Input Offset Voltage vs Ambient Temperature
(V_{ICM}=VDD, E_K=-VDD/2)

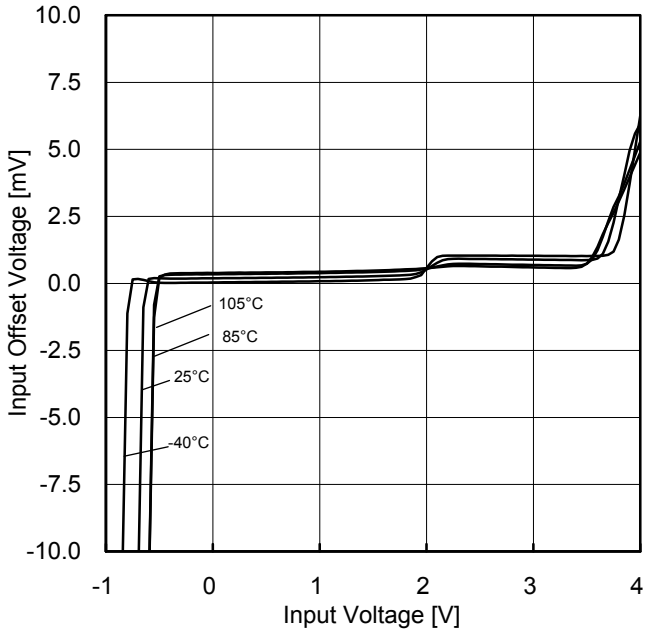

Figure16.
Input Offset Voltage vs Input Voltage
(VDD=3V)

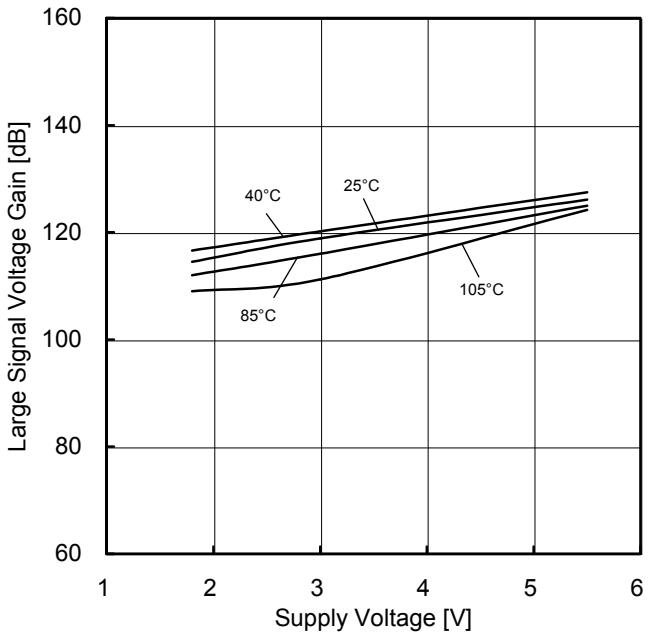

Figure 17.
Large Signal Voltage Gain vs Supply Voltage

(*)The above characteristics are measurements of typical sample, they are not guaranteed.
BU7261G: -40℃ to +85℃ BU7261SG: -40℃ to +105℃

© 2013 ROHM Co., Ltd. All rights reserved.

Typical Performance Curves - Continued

○BU7261G, BU7261SG

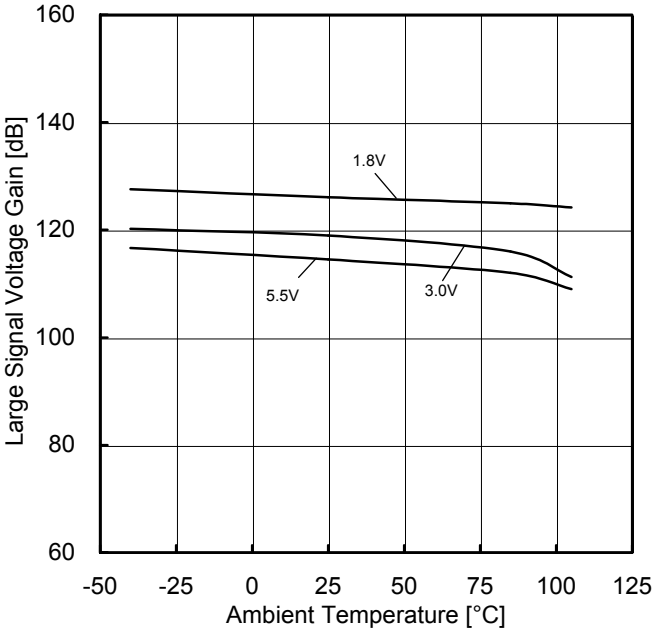

Figure 18.
Large Signal Voltage Gain vs Ambient Temperature

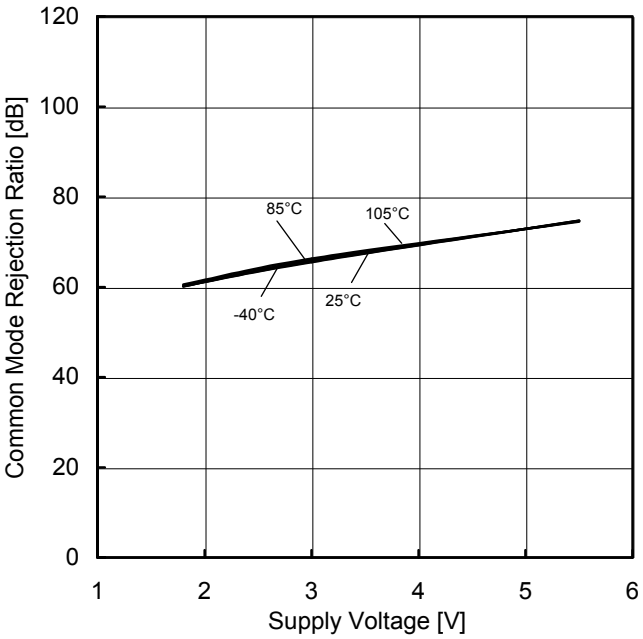

Figure 19.
Common Mode Rejection Ratio vs Supply Voltage

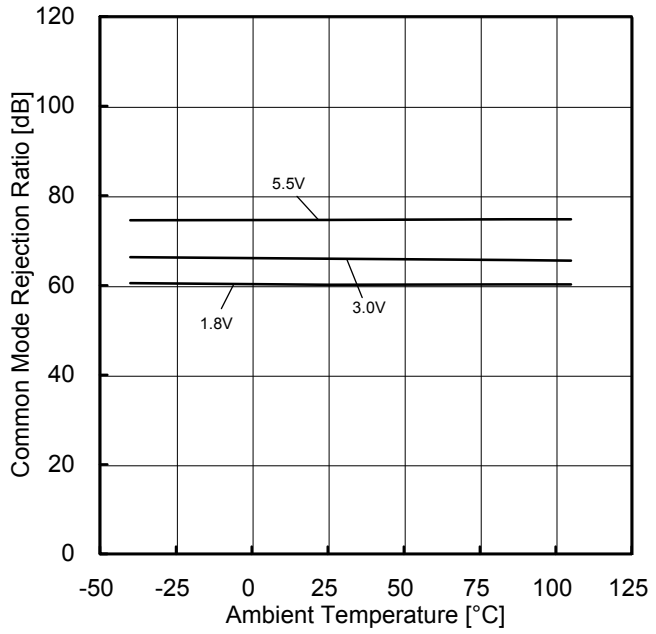

Figure 20.
Common Mode Rejection Ratio vs Ambient Temperature

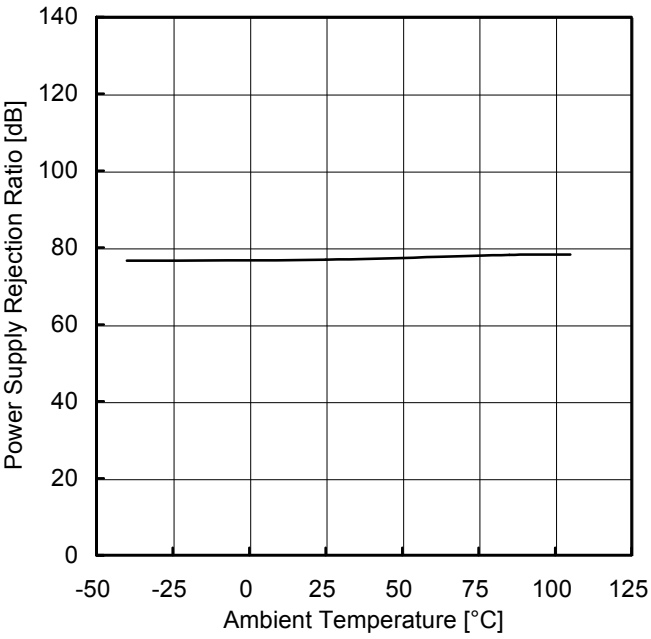

Figure 21.
Power Supply Rejection Ratio vs Ambient Temperature

(*)The above characteristics are measurements of typical sample, they are not guaranteed.
BU7261G: -40℃ to +85℃ BU7261SG: -40℃ to +105℃

© 2013 ROHM Co., Ltd. All rights reserved.

Typical Performance Curves - Continued

○BU7261G, BU7261SG

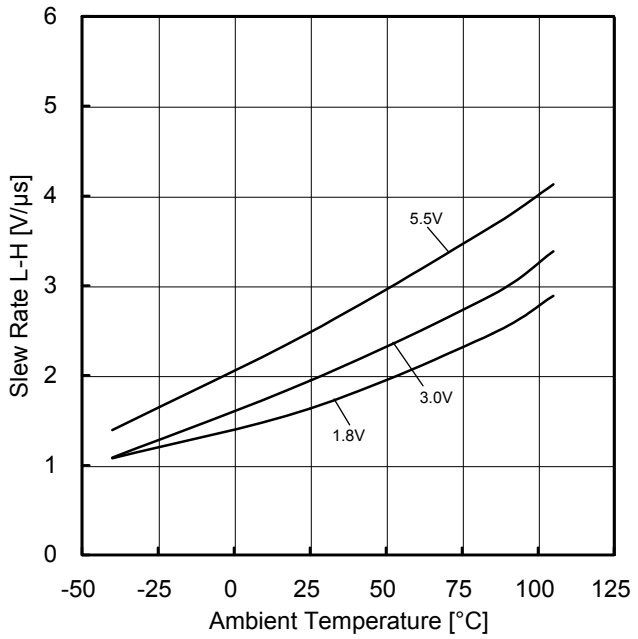

Figure 22.
Slew Rate L-H vs Ambient Temperature

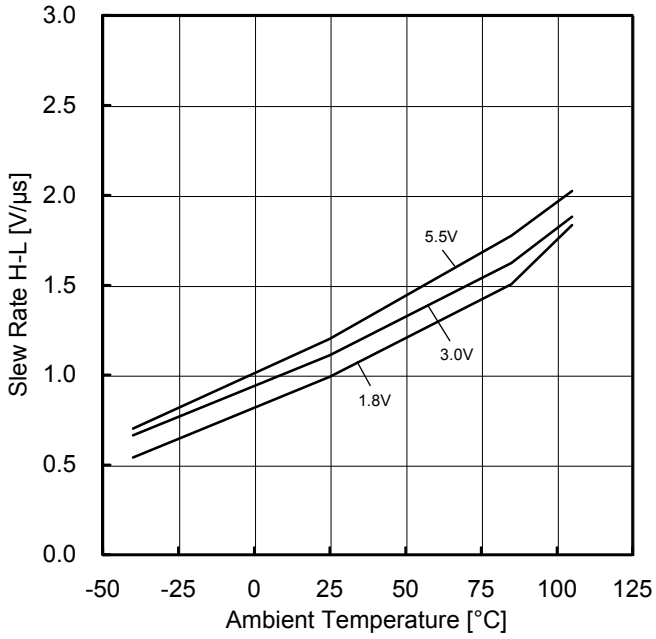

Figure 23.
Slew Rate H-L vs Ambient Temperature

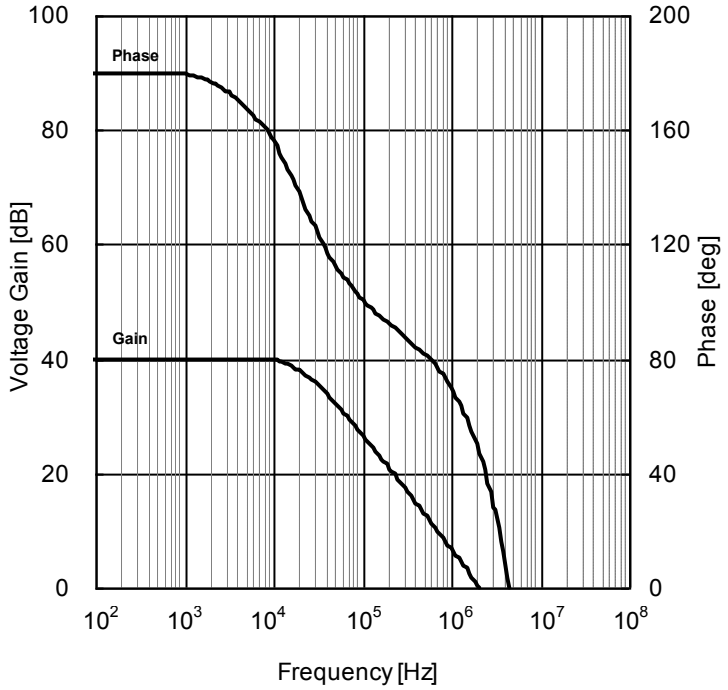

Figure 24.
Voltage Gain・Phase vs Frequency

(*)The above characteristics are measurements of typical sample, they are not guaranteed.
BU7261G: -40℃ to +85℃ BU7261SG: -40℃ to +105℃

© 2013 ROHM Co., Ltd. All rights reserved.

Typical Performance Curves – Continued

○BU7262xxx, BU7262Sxxx

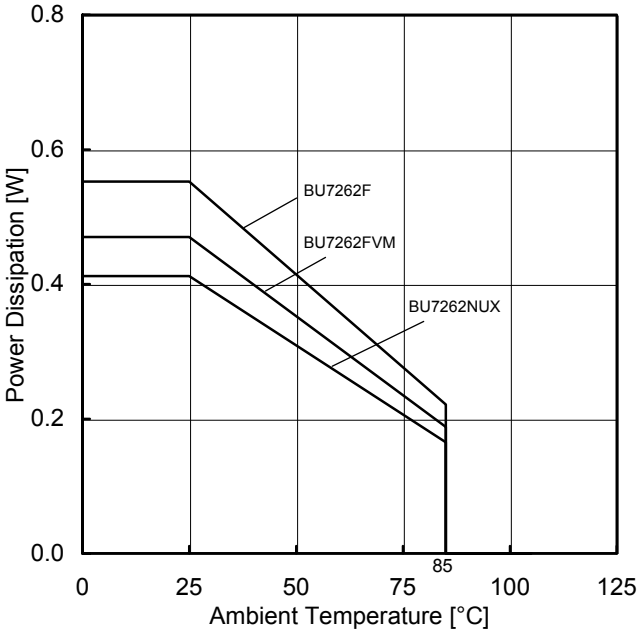

Figure 25.
Power Dissipation vs Ambient Temperature
(Derating Curve)

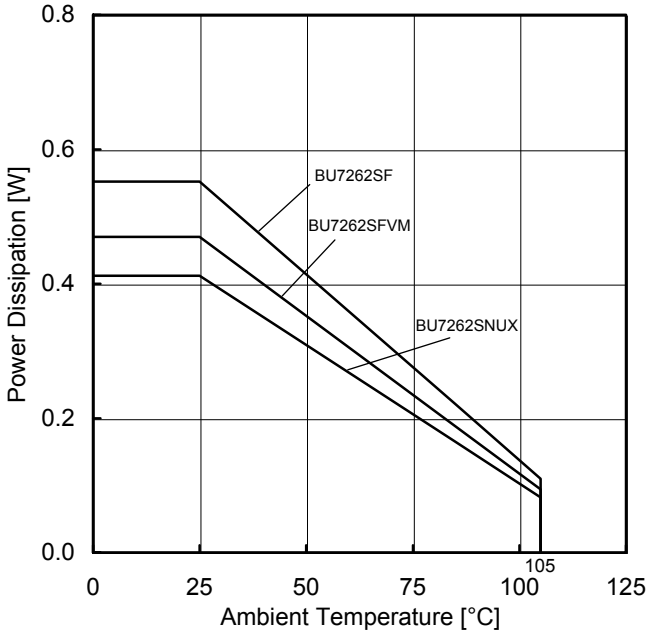

Figure 26.
Power Dissipation vs Ambient Temperature
(Derating Curve)

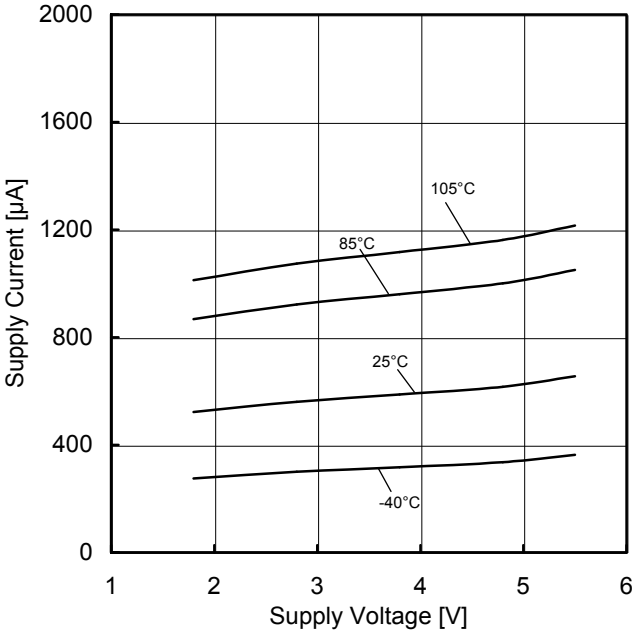

Figure 27.
Supply Current vs Supply Voltage

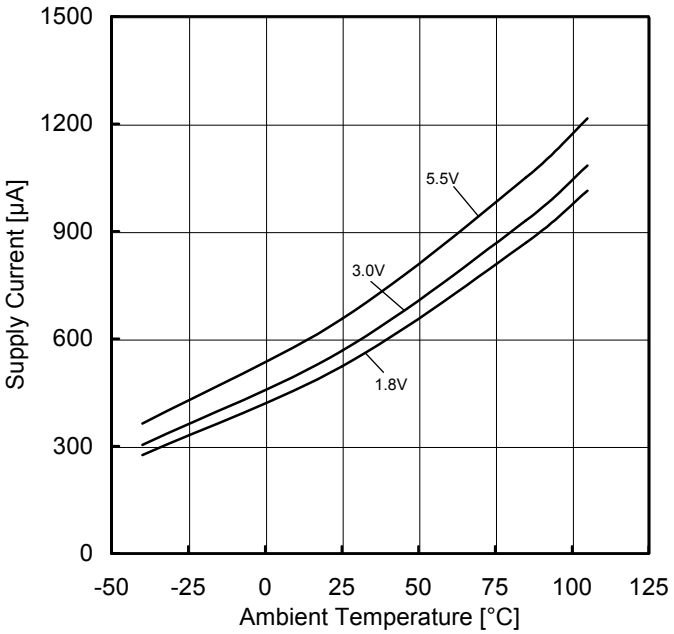

Figure 28.
Supply Current vs Ambient Temperature

(*)The above characteristics are measurements of typical sample, they are not guaranteed.
BU7262xxx: -40℃ to +85℃ BU7262Sxxx: -40℃ to +105℃

© 2013 ROHM Co., Ltd. All rights reserved.

Typical Performance Curves – Continued

○BU7262xxx, BU7262Sxxx

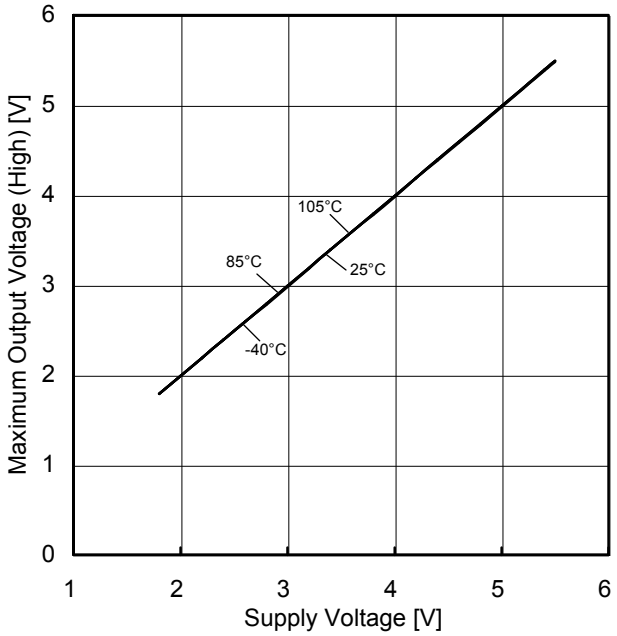

Figure 29.
Maximum Output Voltage (High) vs Supply Voltage
(R_L=10kΩ)

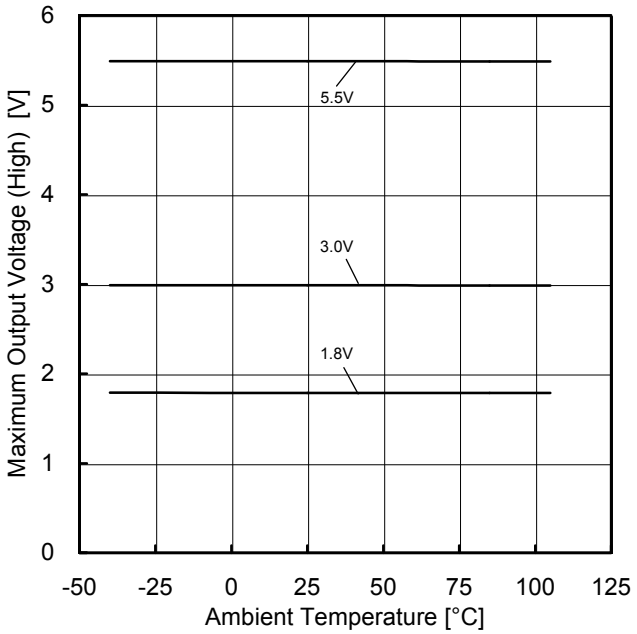

Figure 30.
Maximum Output Voltage (High) vs Ambient Temperature
(R_L=10kΩ)

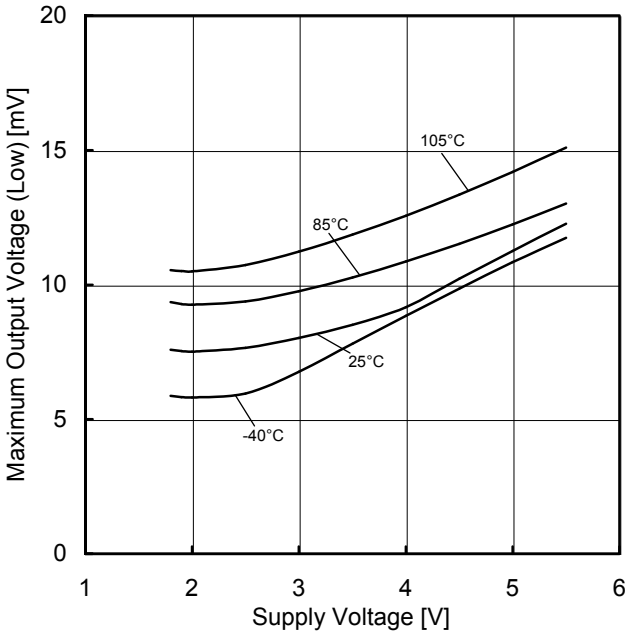

Figure 31.
Maximum Output Voltage (Low) vs Supply Voltage
(R_L=10kΩ)

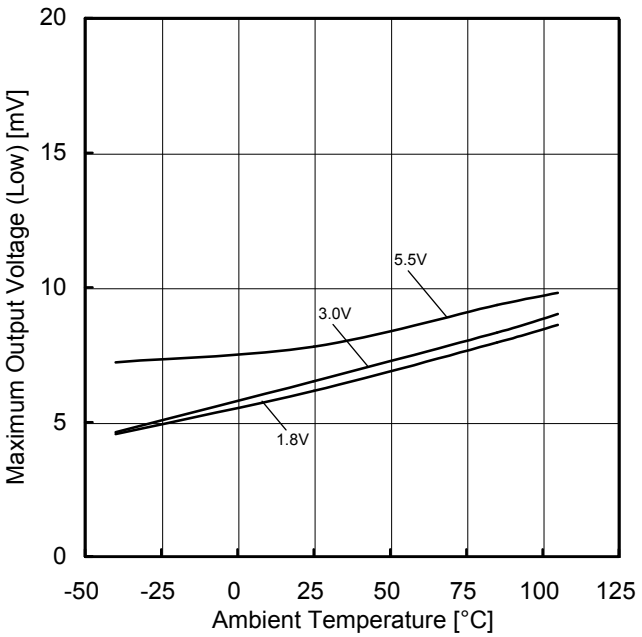

Figure 32.
Maximum Output Voltage (Low) vs Ambient Temperature
(R_L=10kΩ)

(*)The above characteristics are measurements of typical sample, they are not guaranteed.
BU7262xxx: -40℃ to +85℃ BU7262Sxxx: -40℃ to +105℃

© 2013 ROHM Co., Ltd. All rights reserved.

Typical Performance Curves – Continued

○BU7262xxx, BU7262Sxxx

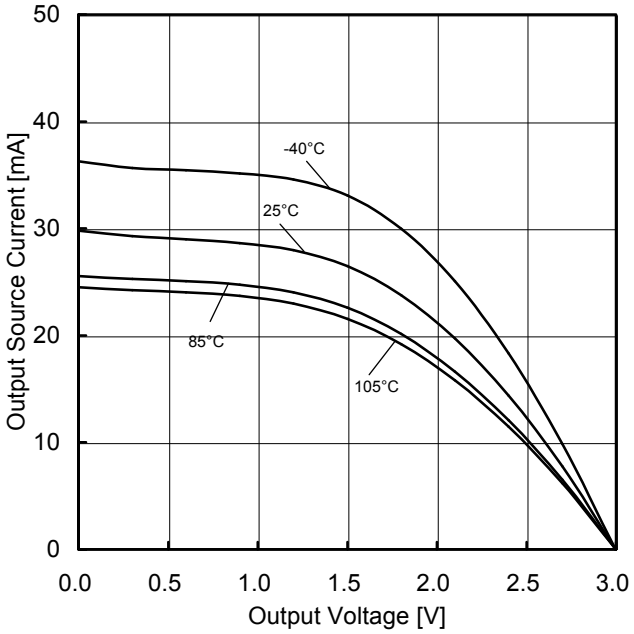

Figure 33.
Output Source Current vs Output Voltage
(VDD=3V)

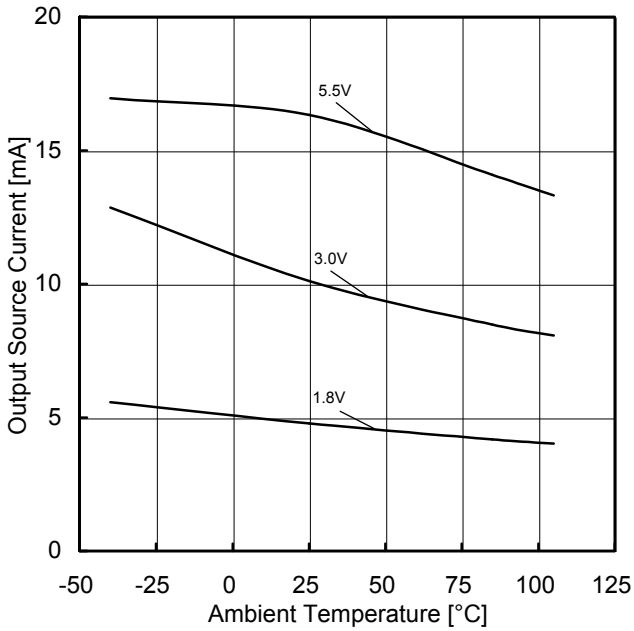

Figure 34.
Output Source Current vs Ambient Temperature
(OUT=VDD-0.4V)

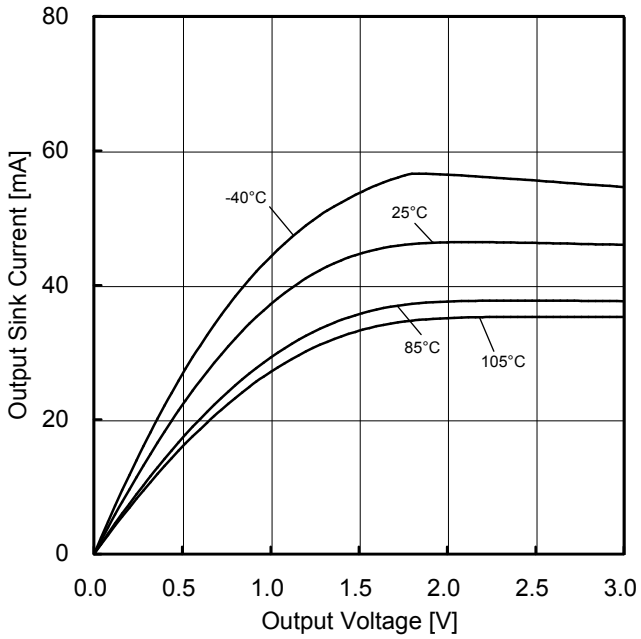

Figure 35.
Output Sink Current vs Output Voltage
(VDD=3V)

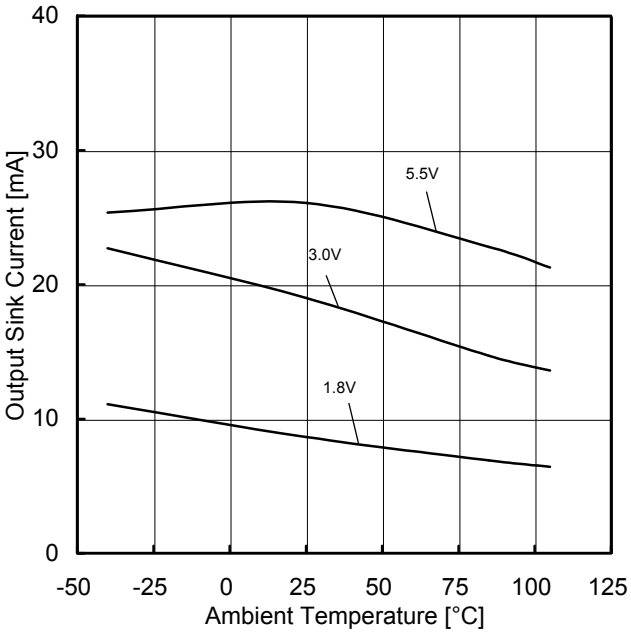

Figure 36.
Output Sink Current vs Ambient Temperature
(OUT=VSS+0.4V)

(*)The above characteristics are measurements of typical sample, they are not guaranteed.
BU7262xxx: -40℃ to +85℃ BU7262Sxxx: -40℃ to +105℃

© 2013 ROHM Co., Ltd. All rights reserved.

Typical Performance Curves – Continued

○BU7262xxx, BU7262Sxxx

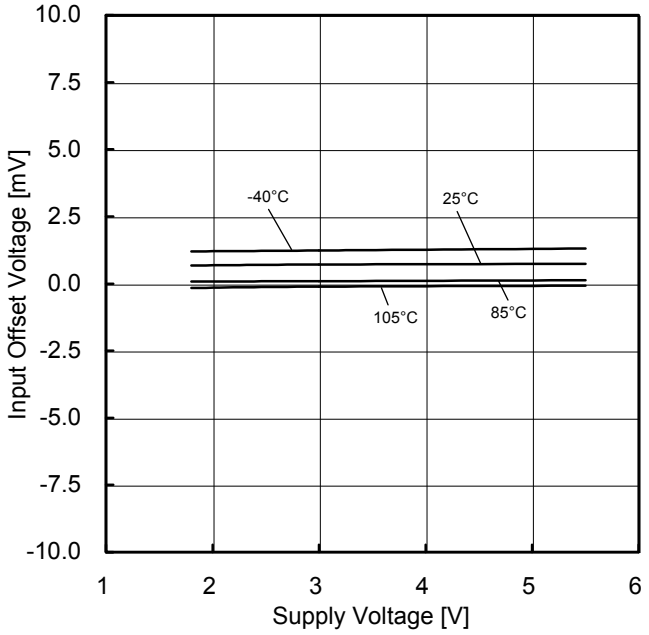

Figure 37.
Input Offset Voltage vs Supply Voltage
(V_{ICM}=VDD, E_K=-VDD/2)

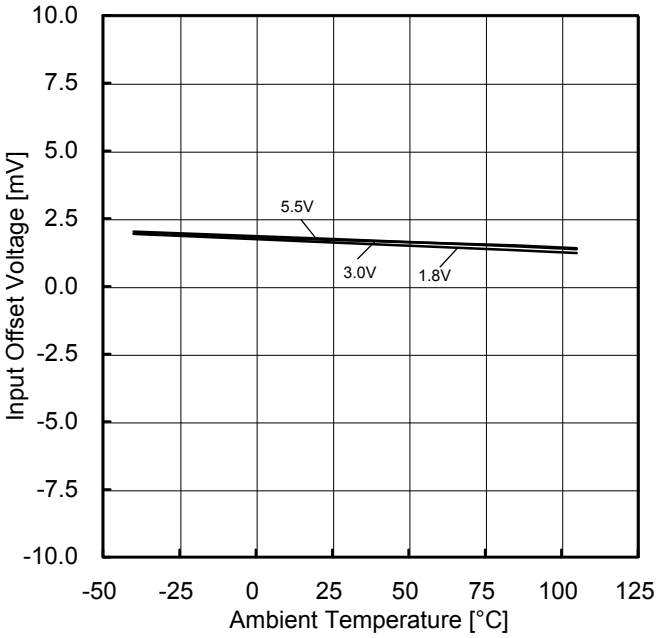

Figure 38.
Input Offset Voltage vs Ambient Temperature
(V_{ICM}=VDD, E_K=-VDD/2)

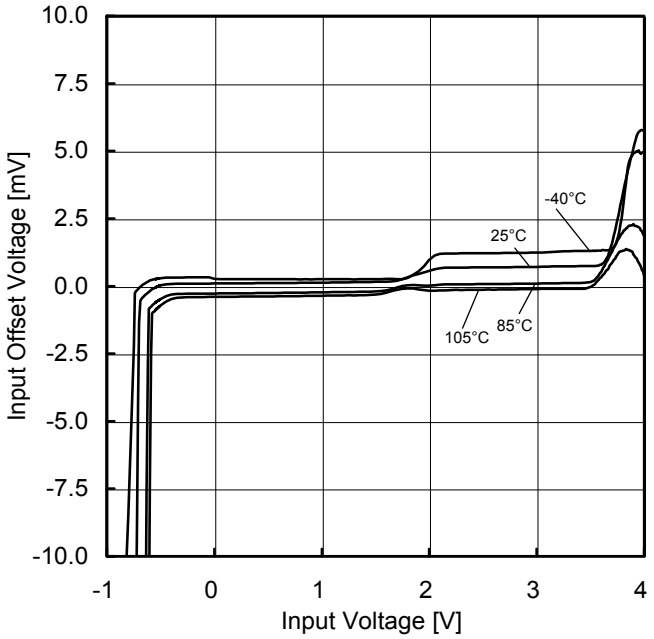

Figure 39.
Input Offset Voltage vs Input Voltage
(VDD=3V)

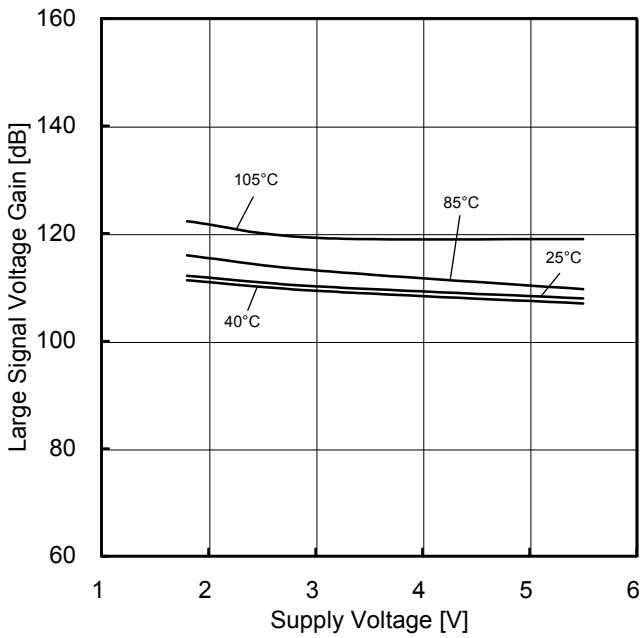

Figure 40.
Large Signal Voltage Gain vs Supply Voltage

(*)The above characteristics are measurements of typical sample, they are not guaranteed.
BU7262xxx: -40℃ to +85℃ BU7262Sxxx: -40℃ to +105℃

© 2013 ROHM Co., Ltd. All rights reserved.

Typical Performance Curves – Continued

○BU7262xxx, BU7262Sxxx

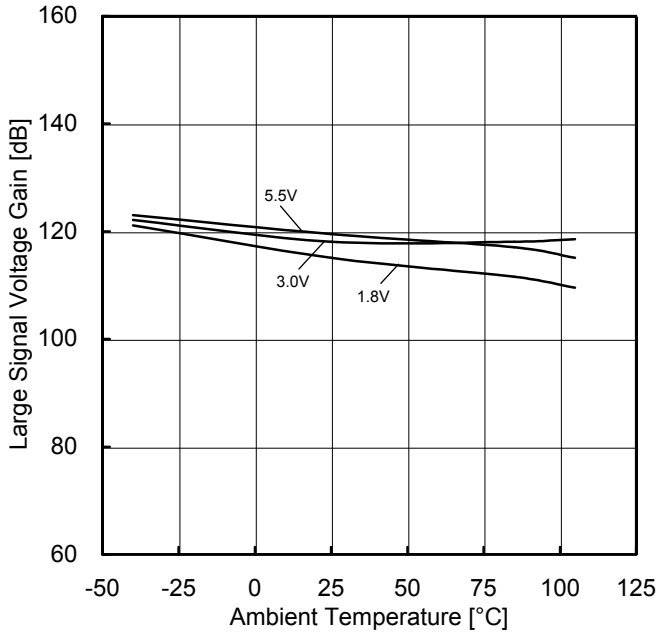

Figure 41.
Large Signal Voltage Gain vs Ambient Temperature

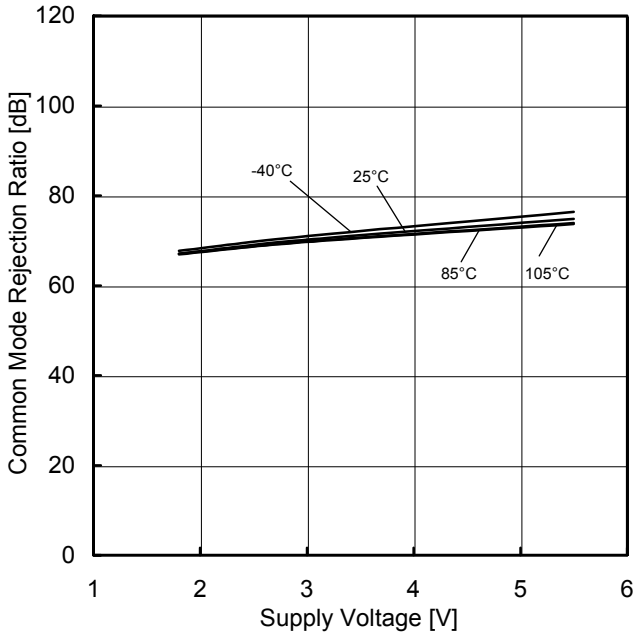

Figure 42.
Common Mode Rejection Ratio vs Supply Voltage
(VDD=3V)

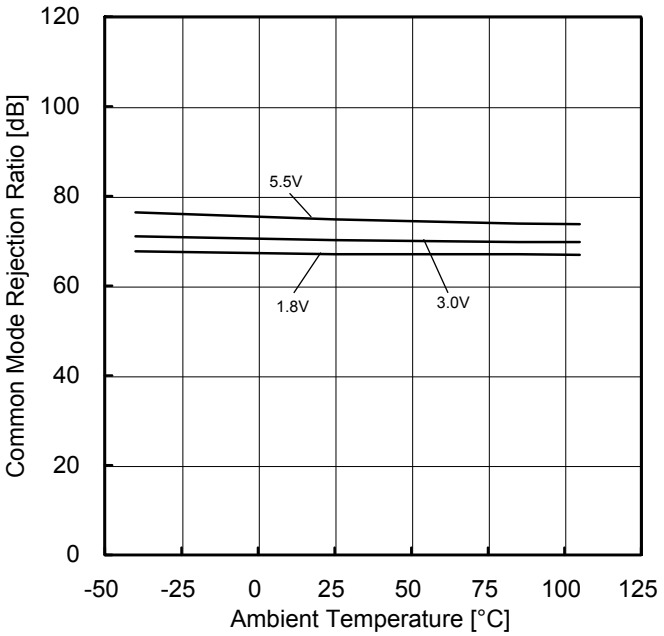

Figure 43.
Common Mode Rejection Ratio vs Ambient Temperature
(VDD=3V)

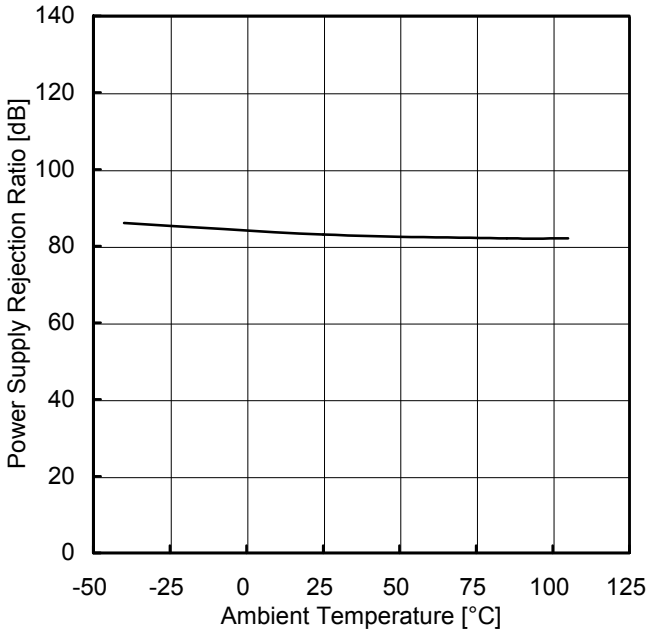

Figure 44.
Power Supply Rejection Ratio vs Ambient Temperature

(*)The above characteristics are measurements of typical sample, they are not guaranteed.
BU7262xxx: -40℃ to +85℃ BU7262Sxxx: -40℃ to +105℃

© 2013 ROHM Co., Ltd. All rights reserved.

Typical Performance Curves – Continued

○BU7262xxx, BU7262Sxxx

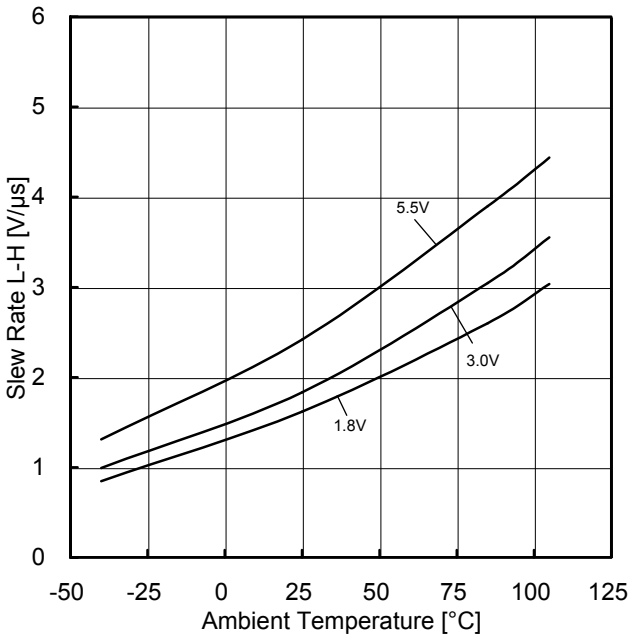

Figure 45.
Slew Rate L-H vs Ambient Temperature

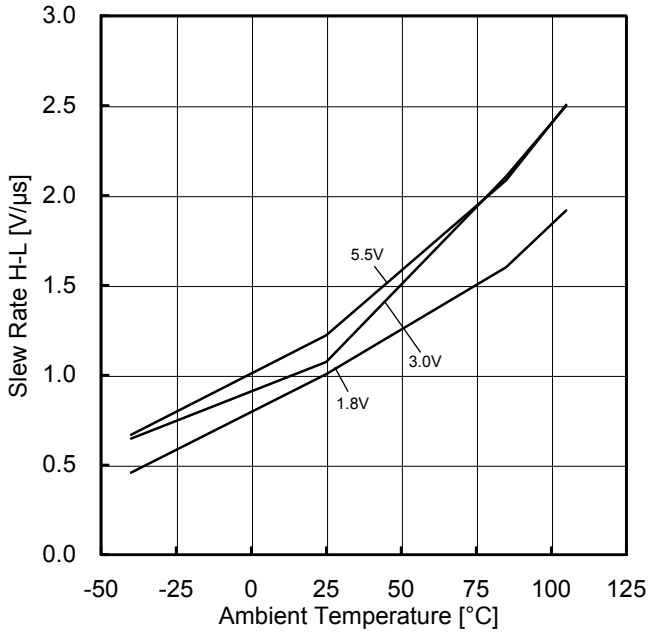

Figure 46.
Slew Rate H-L vs Ambient Temperature

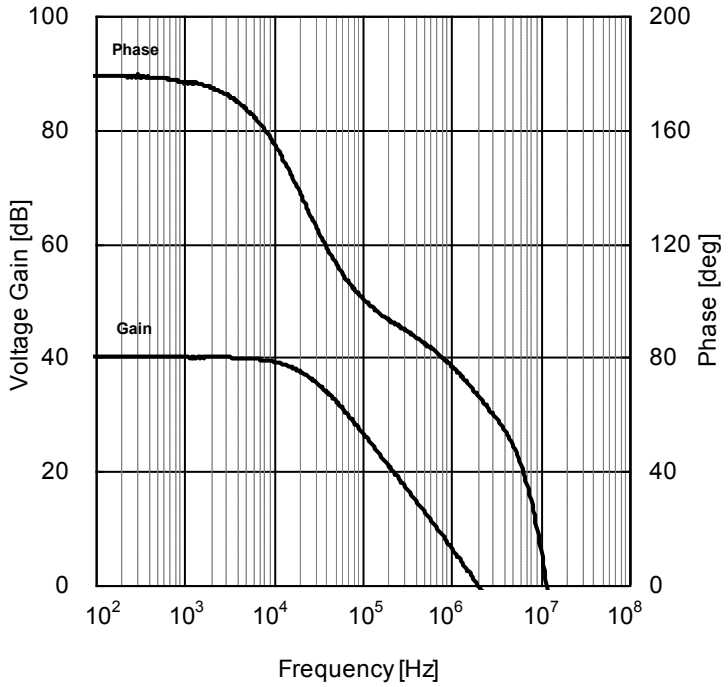

Figure 47.
Voltage Gain・Phase vs Frequency

(*)The above characteristics are measurements of typical sample, they are not guaranteed.
BU7262xxx: -40℃ to +85℃ BU7262Sxxx: -40℃ to +105℃

© 2013 ROHM Co., Ltd. All rights reserved.

Typical Performance Curves – Continued

○BU7264xx, BU7264Sxx

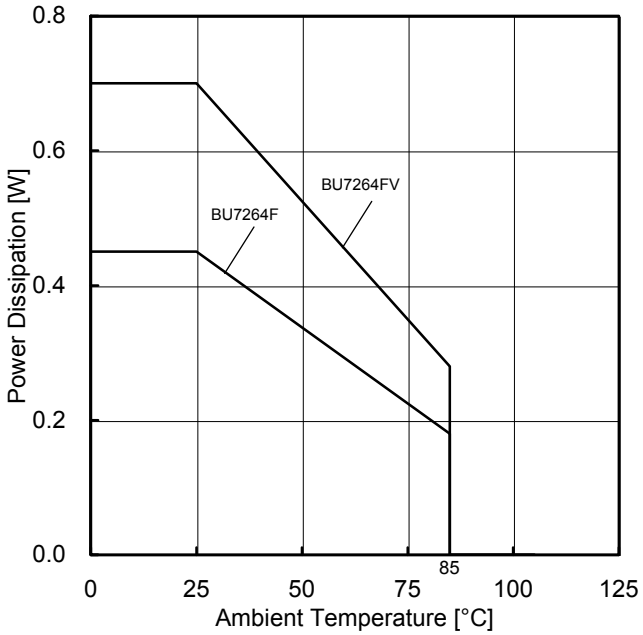

Figure 48.
Power Dissipation vs Ambient Temperature
(Derating Curve)

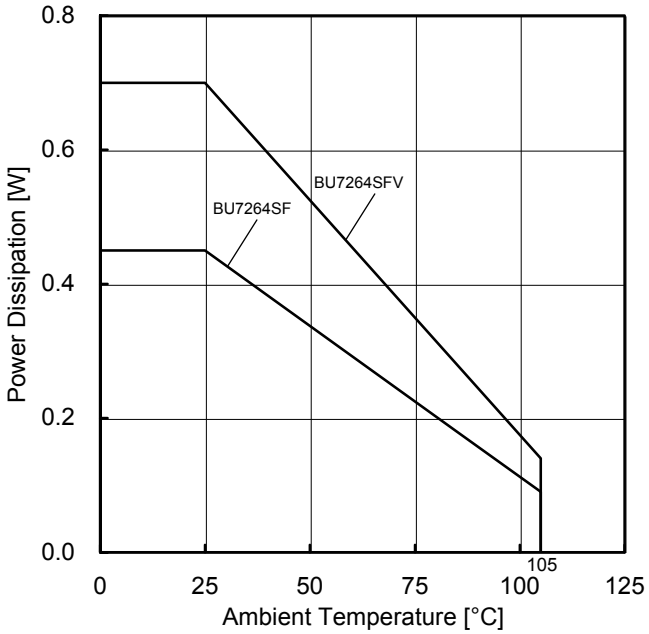

Figure 49.
Power Dissipation vs Ambient Temperature
(Derating Curve)

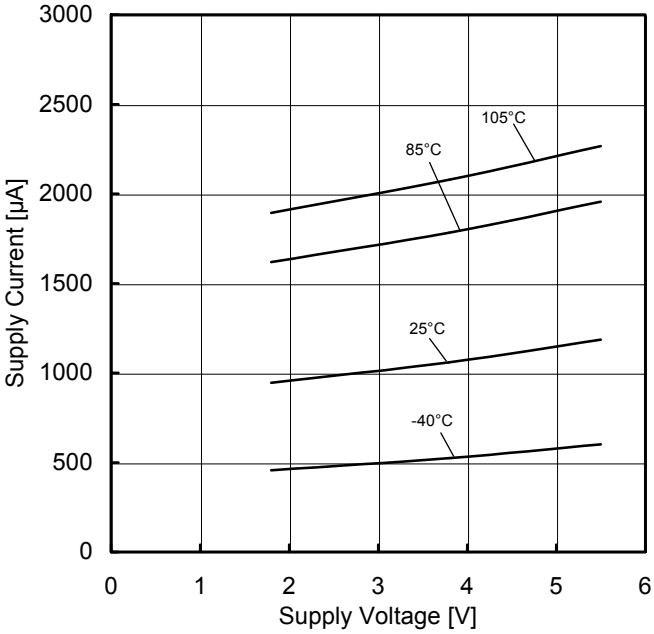

Figure 50.
Supply Current vs Supply Voltage

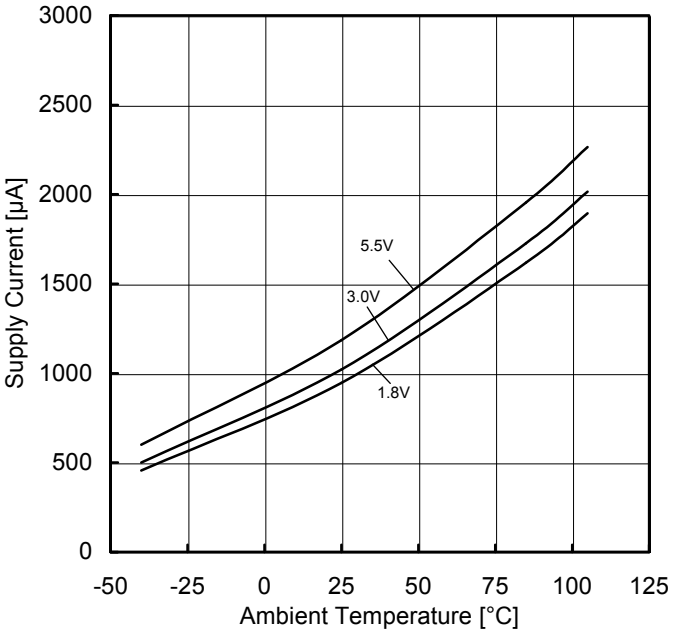

Figure 51.
Supply Current vs Ambient Temperature

(*)The above characteristics are measurements of typical sample, they are not guaranteed.
BU7264xx: -40℃ to +85℃ BU7264Sxx: -40℃ to +105℃

© 2013 ROHM Co., Ltd. All rights reserved.

Typical Performance Curves – Continued

○BU7264xx, BU7264Sxx

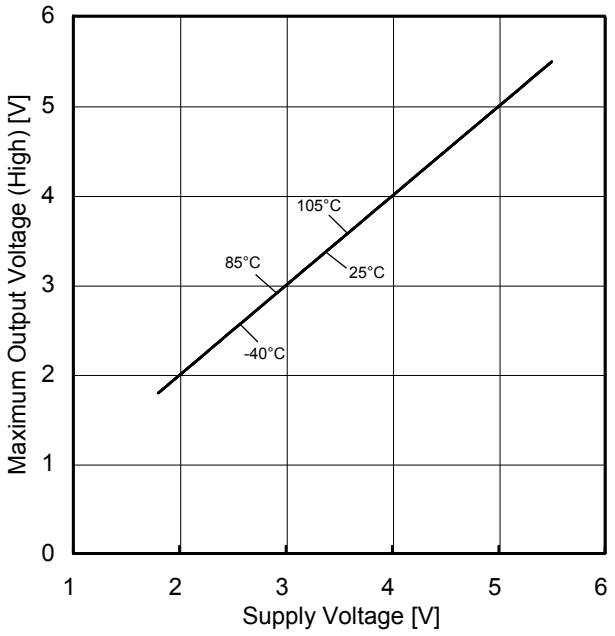

Figure 52.
Maximum Output Voltage (High) vs Supply Voltage
(R_L=10kΩ)

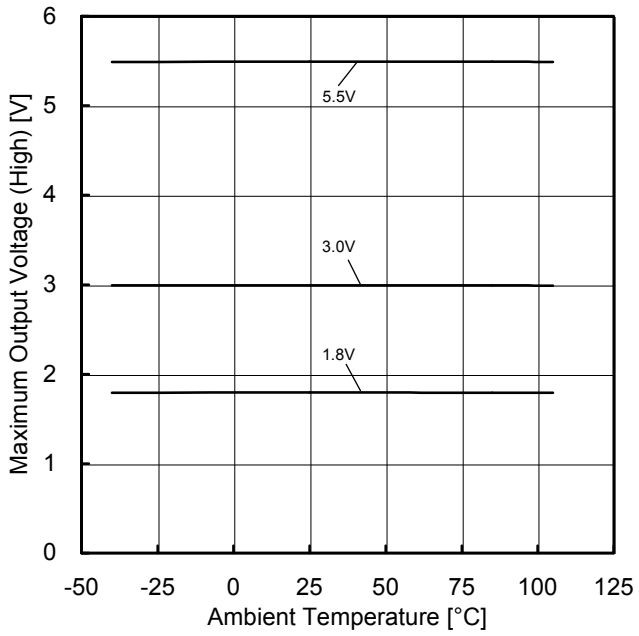

Figure 53.
Maximum Output Voltage (High) vs Ambient Temperature
(R_L=10kΩ)

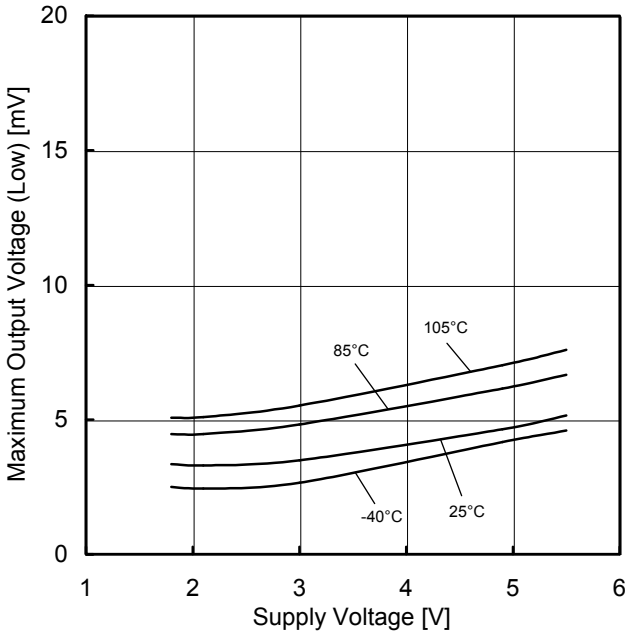

Figure 54.
Maximum Output Voltage (Low) vs Supply Voltage
(R_L=10kΩ)

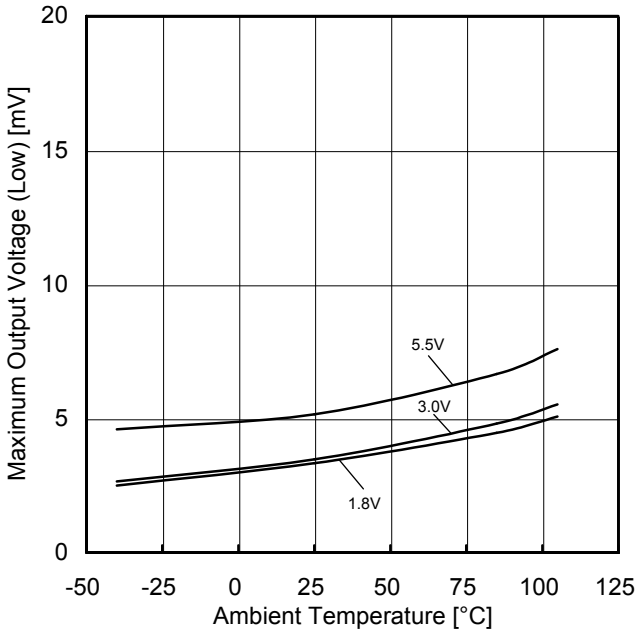

Figure 55.
Maximum Output Voltage (Low) vs Ambient Temperature
(R_L=10kΩ)

(*)The above characteristics are measurements of typical sample, they are not guaranteed.
BU7264xx: -40℃ to +85℃ BU7264Sxx: -40℃ to +105℃

© 2013 ROHM Co., Ltd. All rights reserved.

Typical Performance Curves – Continued

○BU7264xx, BU7264Sxx

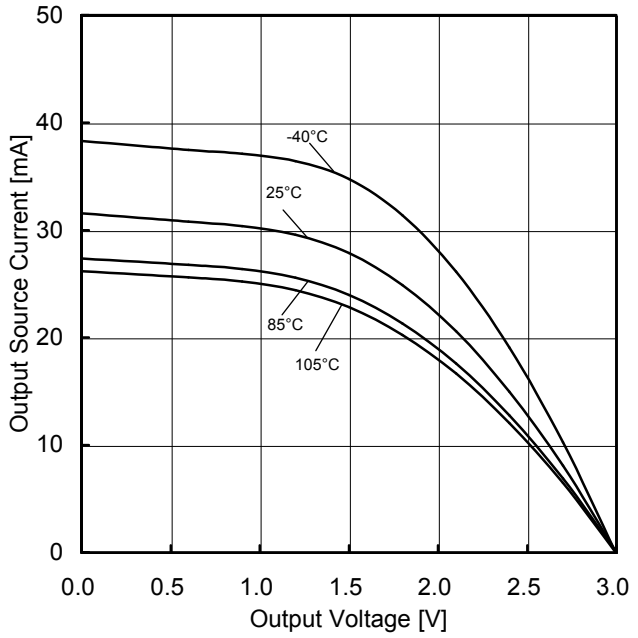

Figure 56.
Output Source Current vs Output Voltage
(VDD=3V)

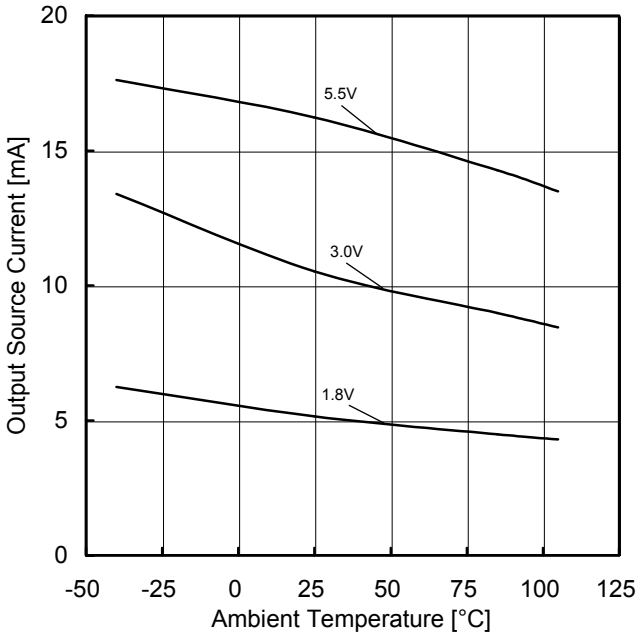

Figure 57.
Output Source Current vs Ambient Temperature
(OUT=VDD-0.4V)

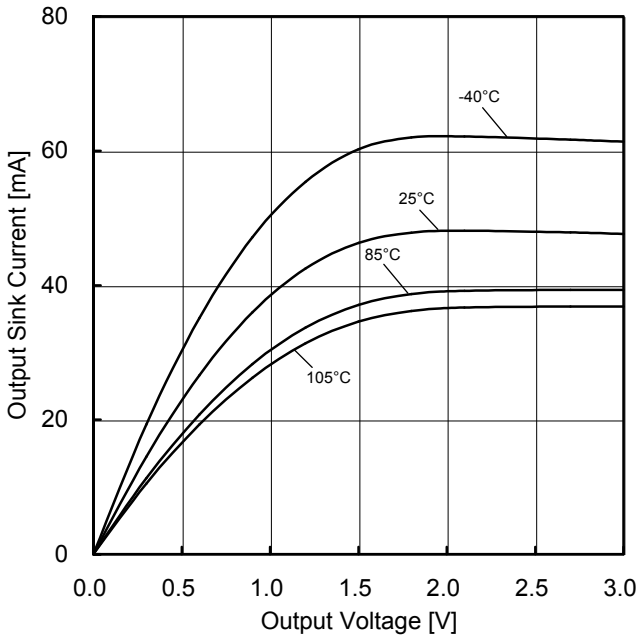

Figure 58.
Output Sink Current vs Output Voltage
(VDD=3V)

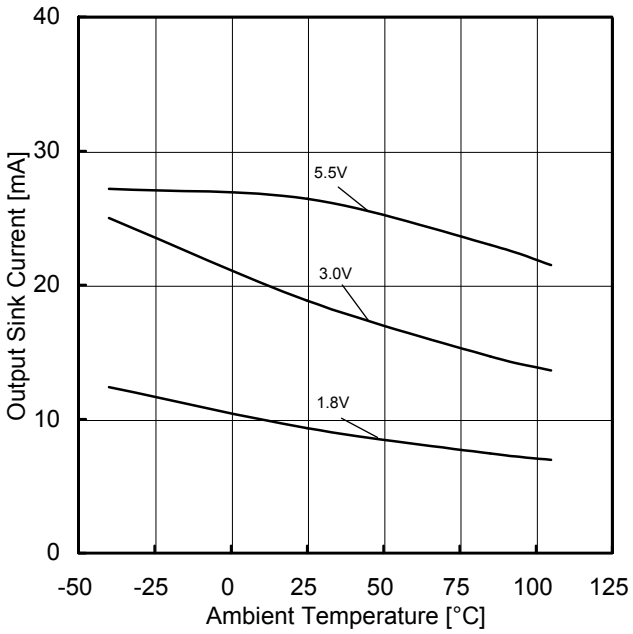

Figure 59.
Output Sink Current vs Ambient Temperature
(OUT=VSS+0.4V)

(*)The above characteristics are measurements of typical sample, they are not guaranteed.
BU7264xx: -40℃ to +85℃ BU7264Sxx: -40℃ to +105℃

© 2013 ROHM Co., Ltd. All rights reserved.

Typical Performance Curves – Continued

○BU7264xx, BU7264Sxx

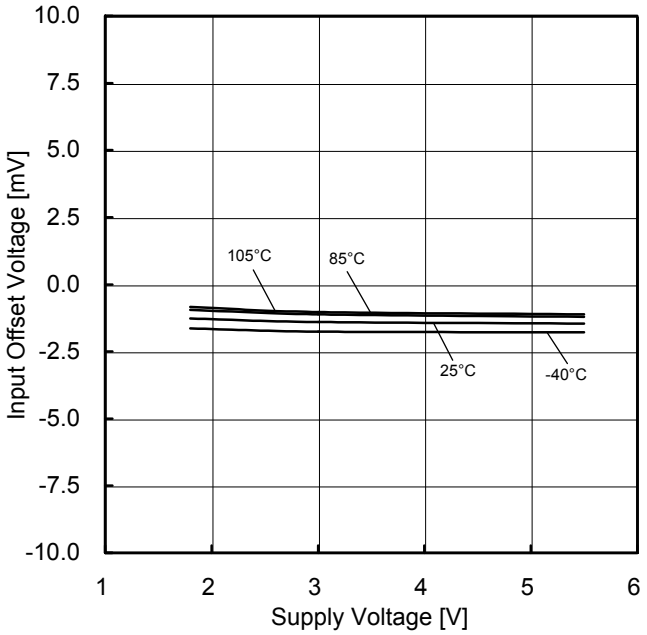

Figure 60.
Input Offset Voltage vs Supply Voltage
(V_{ICM}=VDD, E_K=-VDD/2)

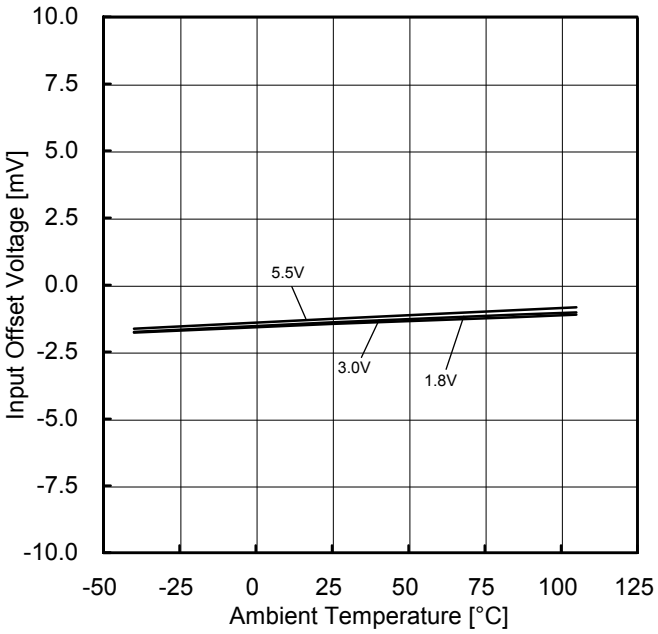

Figure 61.
Input Offset Voltage vs Ambient Temperature
(V_{ICM}=VDD, E_K=-VDD/2)

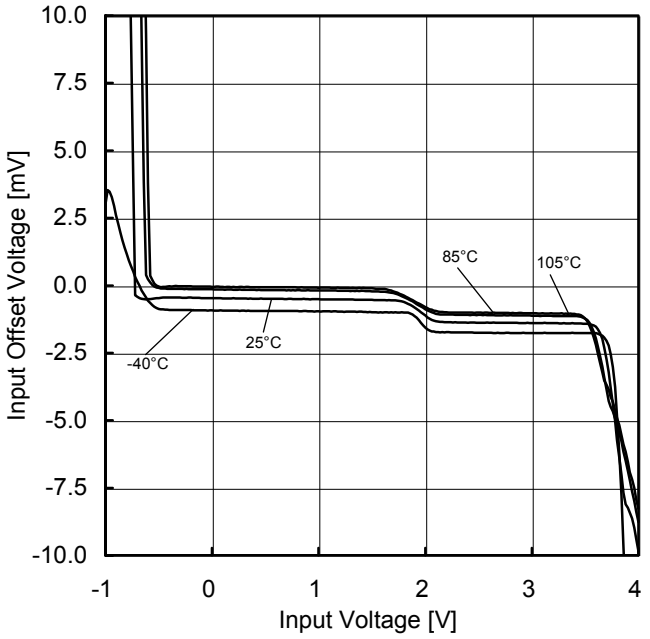

Figure 62.
Input Offset Voltage vs Input Voltage
(VDD=3V)

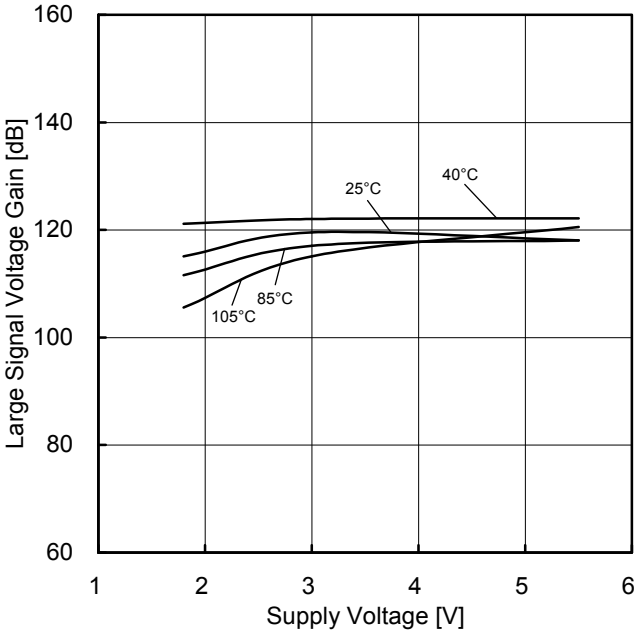

Figure 63.
Large Signal Voltage Gain vs Supply Voltage

(*)The above characteristics are measurements of typical sample, they are not guaranteed.
BU7264xx: -40℃ to +85℃ BU7264Sxx: -40℃ to +105℃

© 2013 ROHM Co., Ltd. All rights reserved.

Typical Performance Curves – Continued

○BU7264xx, BU7264Sxx

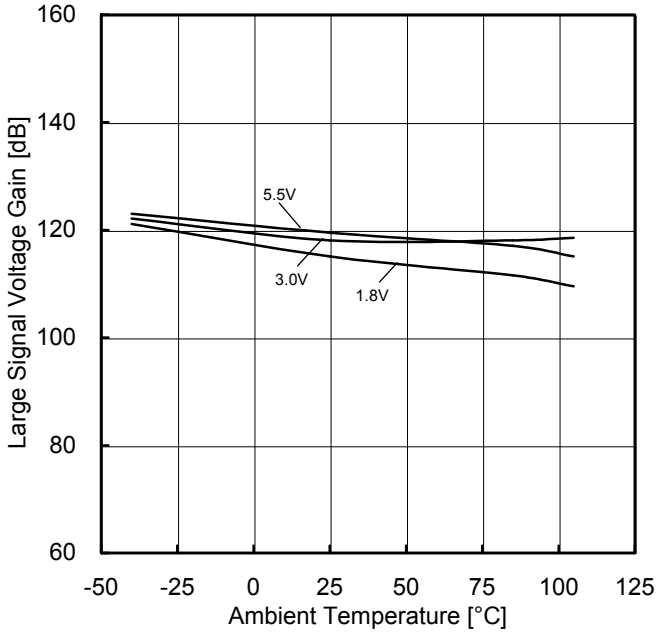

Figure 64.
Large Signal Voltage Gain vs Ambient Temperature

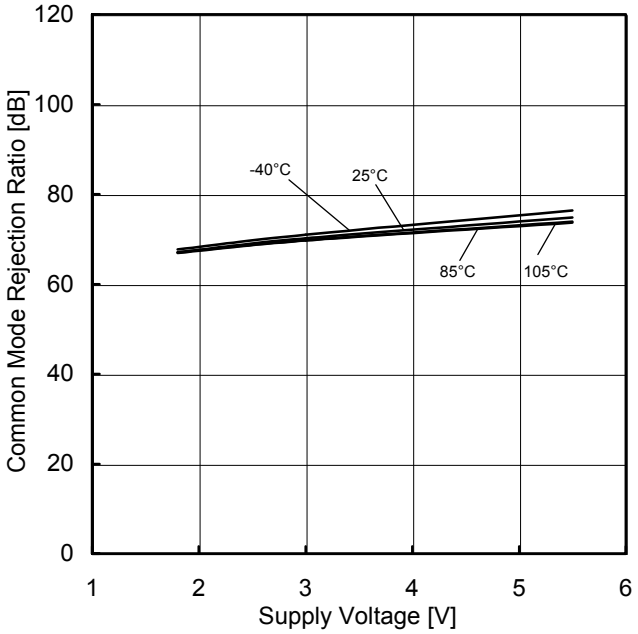

Figure 65.
Common Mode Rejection Ratio vs Supply Voltage
(VDD=3V)

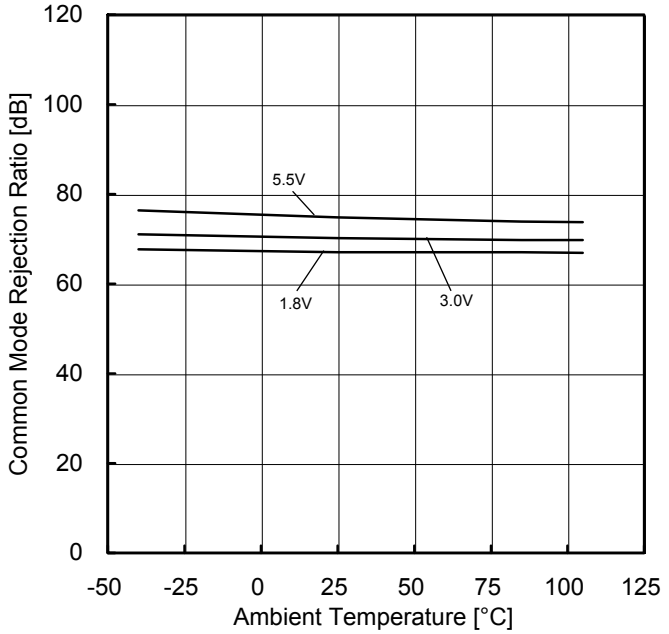

Figure 66.
Common Mode Rejection Ratio vs Ambient Temperature
(VDD=3V)

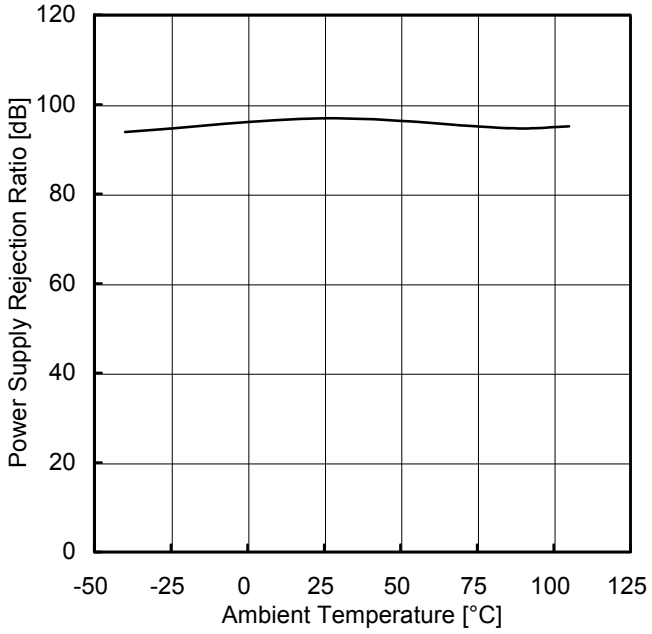

Figure 67.
Power Supply Rejection Ratio vs Ambient Temperature

(*)The above characteristics are measurements of typical sample, they are not guaranteed.
BU7264xx: -40℃ to +85℃ BU7264Sxx: -40℃ to +105℃

© 2013 ROHM Co., Ltd. All rights reserved.

Typical Performance Curves – Continued

○BU7264xx, BU7264Sxx

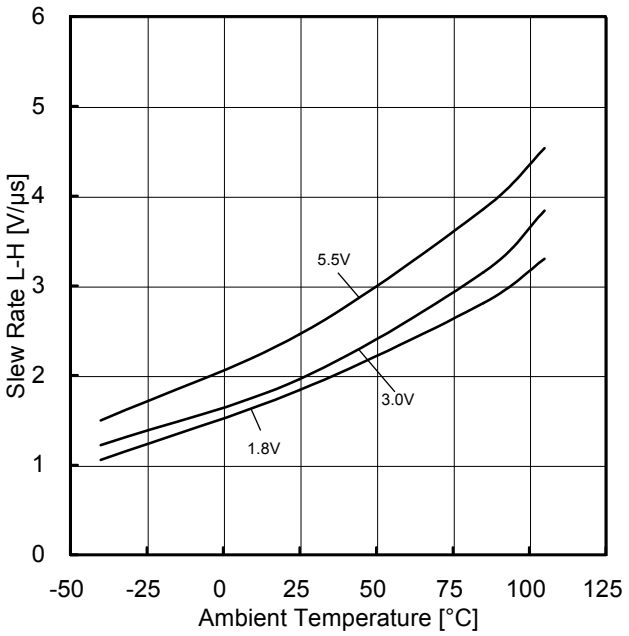

Figure 68.
Slew Rate L-H vs Ambient Temperature

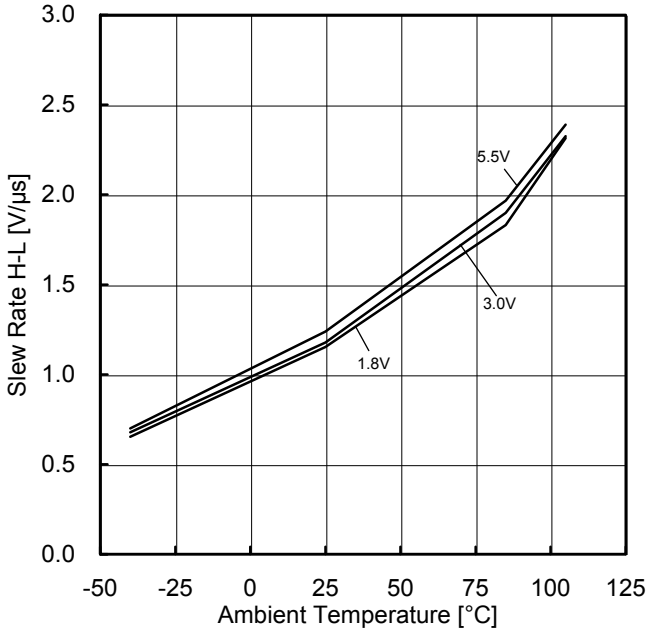

Figure 69.
Slew Rate H-L vs Ambient Temperature

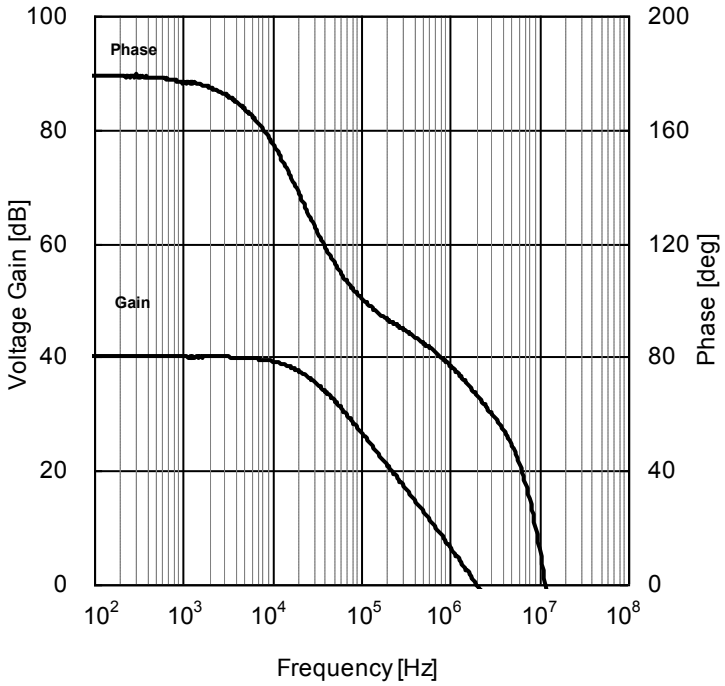

Figure 70.
Voltage Gain・Phase vs Frequency

(*)The above characteristics are measurements of typical sample, they are not guaranteed.
BU7264xx: -40℃ to +85℃ BU7264Sxx: -40℃ to +105℃

© 2013 ROHM Co., Ltd. All rights reserved.

Application Information

NULL method condition for Test Circuit 1

VDD, VSS, E_K, V_{ICM} Unit: V

Parameter	V_F	S1	S2	S3	VDD	VSS	E_K	V_{ICM}	Calculation
Input Offset Voltage	V_{F1}	ON	ON	OFF	3	0	-1.5	3	1
Large Signal Voltage Gain	V_{F2}	ON	ON	ON	3	0	-0.5	1.5	2
	V_{F3}						-2.5		
Common-mode Rejection Ratio (Input Common-mode Voltage Range)	V_{F4}	ON	ON	OFF	3	0	-1.5	0	3
	V_{F5}							3	
Power Supply Rejection Ratio	V_{F6}	ON	ON	OFF	1.8	0	-0.9	0	4
	V_{F7}				5.5				

LOT Number

1PIN MARK

- Calculation -

1. Input Offset Voltage (V_{IO})

$$V_{IO} = \frac{|V_{F1}|}{1+R_F/R_S} \quad [V]$$

2. Large Signal Voltage Gain (A_V)

$$Av = 20Log \frac{\Delta E_K \times (1+R_F/R_S)}{|V_{F2}-V_{F3}|} \quad [dB]$$

3. Common-mode Rejection Ratio (CMRR)

$$CMRR = 20Log \frac{\Delta V_{ICM} \times (1+R_F/R_S)}{|V_{F4} - V_{F5}|} \quad [dB]$$

4. Power Supply Rejection Ratio (PSRR)

$$PSRR = 20Log \frac{\Delta VDD \times (1+ R_F/R_S)}{|V_{F6} - V_{F7}|} \quad [dB]$$

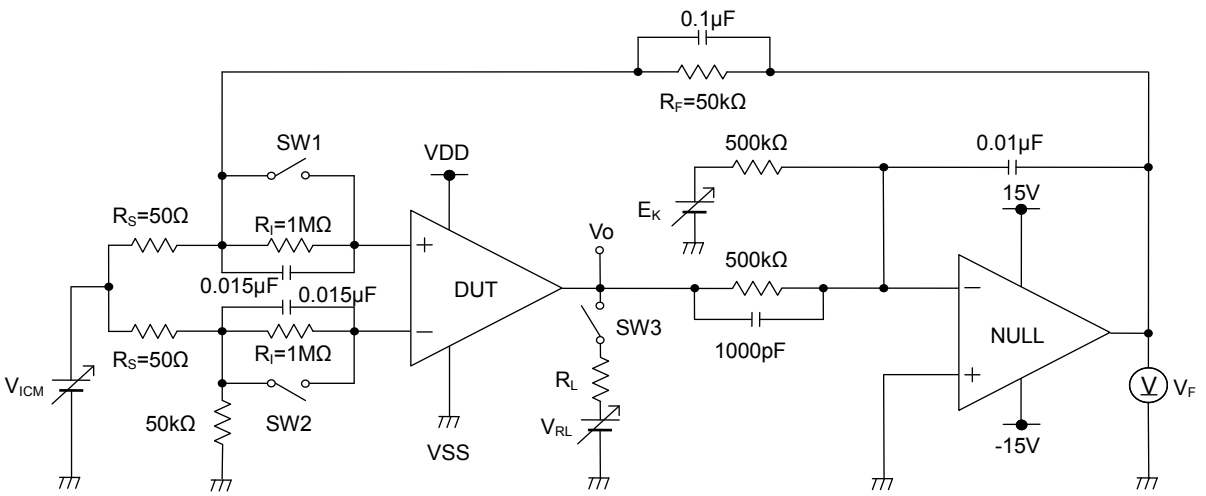

Figure 71. Test Circuit 1 (One Channel Only)

© 2013 ROHM Co., Ltd. All rights reserved.

Application Information - continued

Switch Condition for Test Circuit 2

SW No.	SW1	SW2	SW3	SW4	SW5	SW6	SW7	SW8	SW9	SW10	SW11	SW12
Supply Current	OFF	OFF	ON	OFF	ON	OFF	OFF	OFF	OFF	OFF	OFF	OFF
Maximum Output Voltage R_L=10kΩ	OFF	ON	OFF	OFF	ON	OFF	OFF	ON	OFF	OFF	ON	OFF
Output Current	OFF	ON	OFF	OFF	ON	OFF	OFF	OFF	OFF	ON	OFF	OFF
Slew Rate	OFF	OFF	ON	OFF	OFF	OFF	ON	OFF	ON	OFF	OFF	ON
Gain Bandwidth	ON	OFF	OFF	ON	ON	OFF	OFF	OFF	ON	OFF	OFF	ON

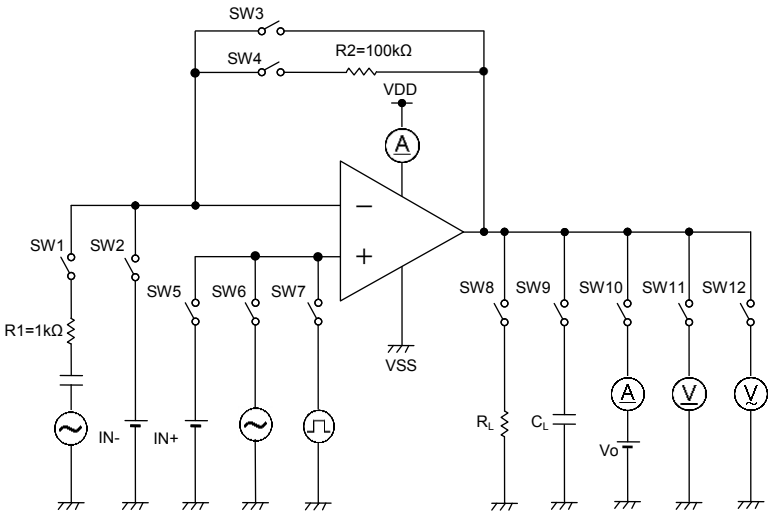

Figure 72. Test Circuit 2 (each channel)

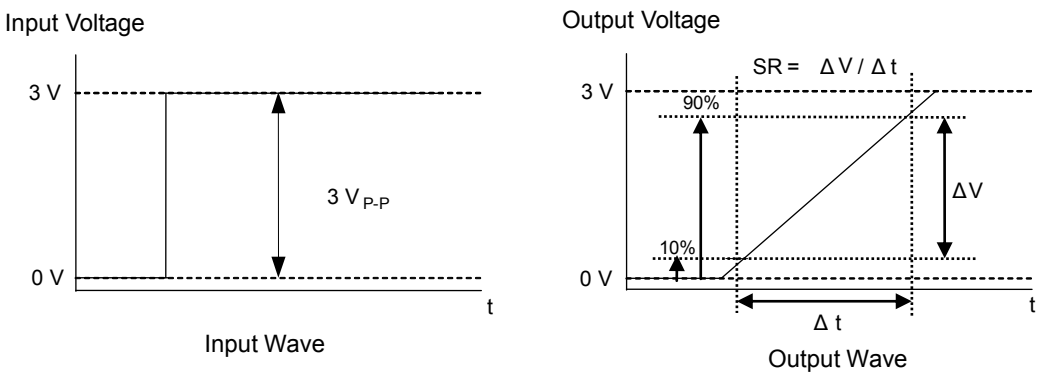

Figure 73. Slew Rate Input and Output Wave

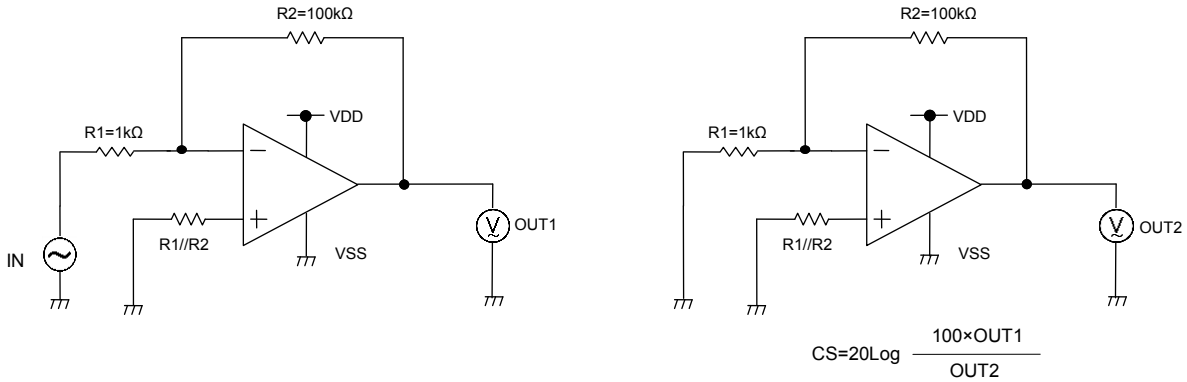

Figure 74. Test Circuit 3 (Channel Separation)

© 2013 ROHM Co., Ltd. All rights reserved.

Examples of Circuit

○Voltage Follower

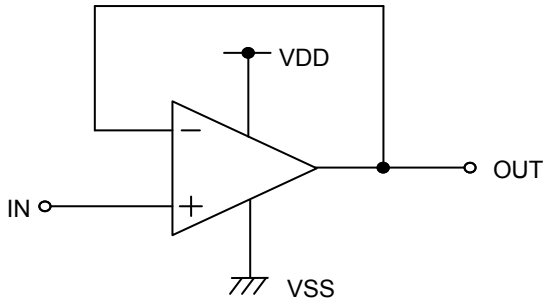

Figure 75. Voltage Follower Circuit

Voltage gain is 0dB.

Using this circuit, the output voltage (OUT) is configured to be equal to the input voltage (IN). This circuit also stabilizes the output voltage (OUT) due to high input impedance and low output impedance. Computation for output voltage (OUT) is shown below.

OUT=IN

○Inverting Amplifier

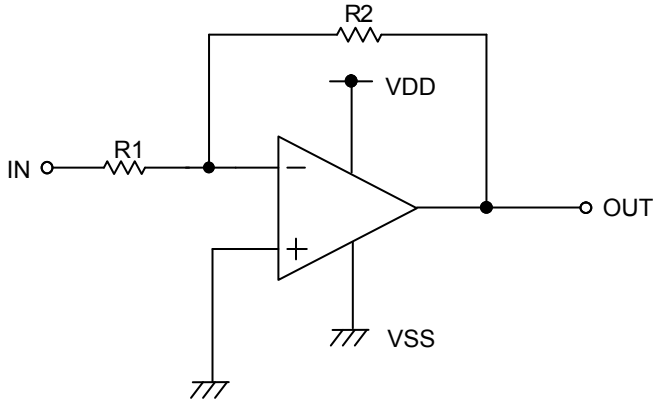

Figure 76. Inverting Amplifier Circuit

For inverting amplifier, input voltage (IN) is amplified by a voltage gain and depends on the ratio of R1 and R2. The out-of-phase output voltage is shown in the next expression

OUT=-(R2/R1)・IN

This circuit has input impedance equal to R1.

○Non-inverting Amplifier

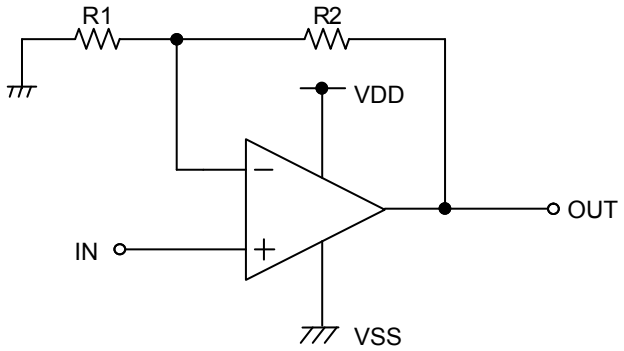

Figure 77. Non-inverting Amplifier Circuit

For non-inverting amplifier, input voltage (IN) is amplified by a voltage gain, which depends on the ratio of R1 and R2. The output voltage (OUT) is in-phase with the input voltage (IN) and is shown in the next expression.

OUT=(1 + R2/R1)・IN

Effectively, this circuit has high input impedance since its input side is the same as that of the operational amplifier.

© 2013 ROHM Co., Ltd. All rights reserved.

Power Dissipation

Power dissipation (total loss) indicates the power that the IC can consume at T_A=25°C (normal temperature). As the IC consumes power, it heats up, causing its temperature to be higher than the ambient temperature. The allowable temperature that the IC can accept is limited. This depends on the circuit configuration, manufacturing process, and consumable power.

Power dissipation is determined by the allowable temperature within the IC (maximum junction temperature) and the thermal resistance of the package used (heat dissipation capability). Maximum junction temperature is typically equal to the maximum storage temperature. The heat generated through the consumption of power by the IC radiates from the mold resin or lead frame of the package. Thermal resistance, represented by the symbol θ_{JA}°C/W, indicates this heat dissipation capability. Similarly, the temperature of an IC inside its package can be estimated by thermal resistance.

Figure 78(a) shows the model of the thermal resistance of a package. The equation below shows how to compute for the Thermal resistance (θ_{JA}), given the ambient temperature (T_A), maximum junction temperature (T_{Jmax}), and power dissipation (P_D).

$$\theta_{JA} = (T_{Jmax} - T_A) / P_D \quad °C/W$$

The Derating curve in Figure 78 (b) indicates the power that the IC can consume with reference to ambient temperature. Power consumption of the IC begins to attenuate at certain temperatures. This gradient is determined by Thermal resistance (θ_{JA}), which depends on the chip size, power consumption, package, ambient temperature, package condition, wind velocity, etc. This may also vary even when the same of package is used. Thermal reduction curve indicates a reference value measured at a specified condition. Figure 78(c) to 78(h) shows an example of the derating curve for BU7261G, BU7261SG, BU7262xxx, BU7262Sxxx, BU7264xx, BU7264Sxx.

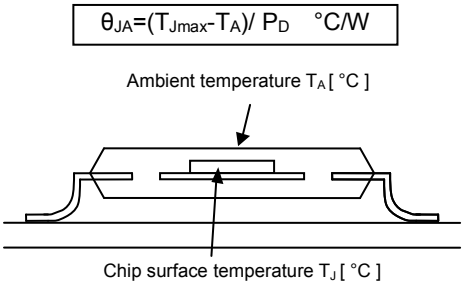

(a) Thermal resistance

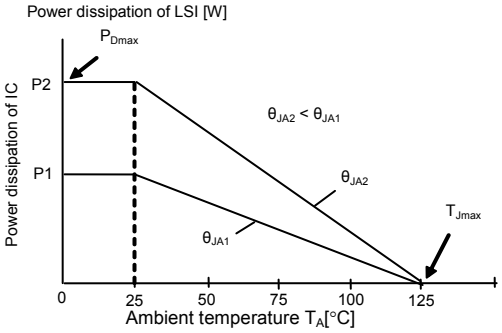

(b) Derating Curve

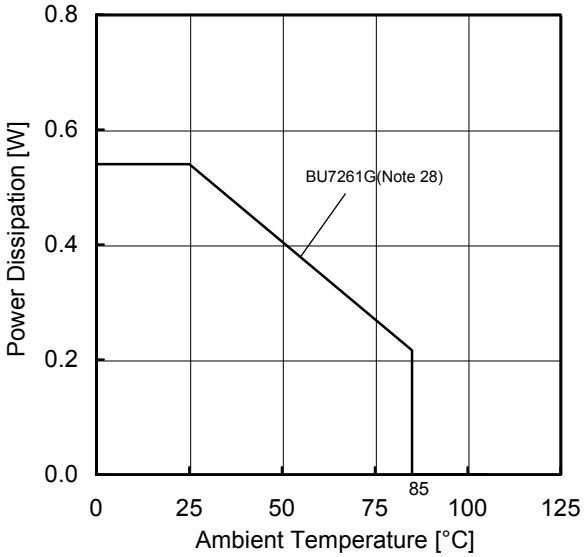

(c)BU7261G

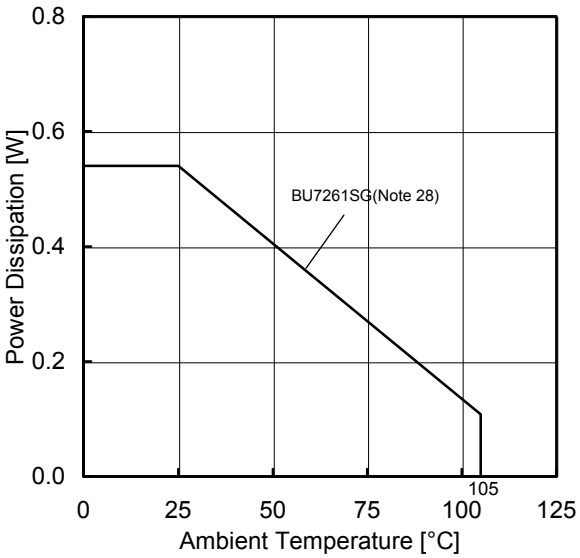

(d)BU7261SG

© 2013 ROHM Co., Ltd. All rights reserved.

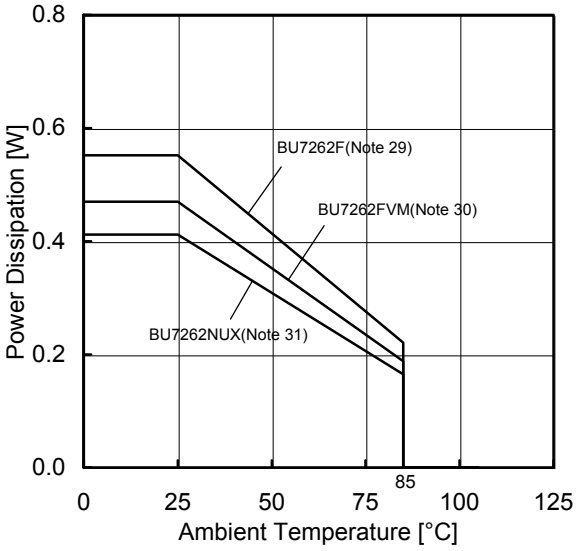

(e)BU7262F/FVM/NUX

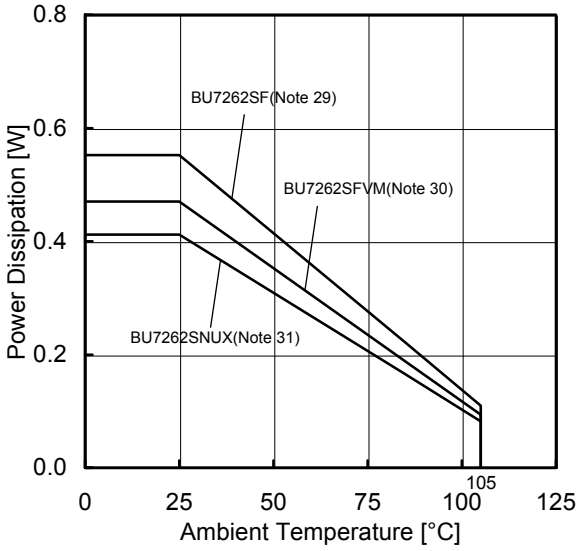

(f)BU7262SF/SFVM/SNUX

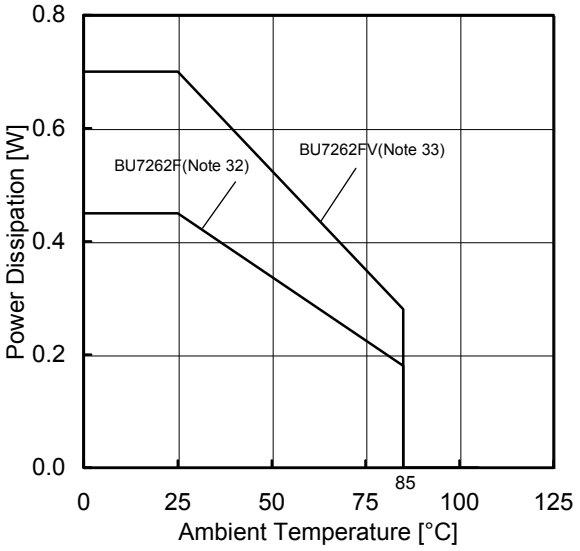

(g)BU7264F/FV

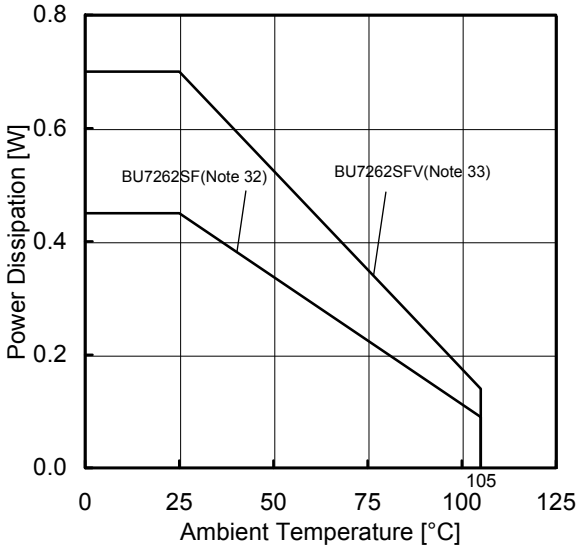

(h)BU7264SF/SFV

(Note 28)	(Note 29)	(Note 30)	(Note 31)	(Note 32)	(Note 33)	Unit
5.4	5.5	4.7	4.1	4.5	7.0	mW/℃

When using the unit above T_A=25℃, subtract the value above per Celsius degree. Power dissipation is the value when FR4 glass epoxy board 70mm×70mm×1.6mm (copper foil area less than 3%) is mounted.

Figure 78. Thermal Resistance and Derating Curve

© 2013 ROHM Co., Ltd. All rights reserved.

Operational Notes

1. **Reverse Connection of Power Supply**
   Connecting the power supply in reverse polarity can damage the IC. Take precautions against reverse polarity when connecting the power supply, such as mounting an external diode between the power supply and the IC's power supply pins.

2. **Power Supply Lines**
   Design the PCB layout pattern to provide low impedance supply lines. Separate the ground and supply lines of the digital and analog blocks to prevent noise in the ground and supply lines of the digital block from affecting the analog block. Furthermore, connect a capacitor to ground at all power supply pins. Consider the effect of temperature and aging on the capacitance value when using electrolytic capacitors.

3. **Ground Voltage**
   Ensure that no pins are at a voltage below that of the ground pin at any time, even during transient condition.

4. **Ground Wiring Pattern**
   When using both small-signal and large-current ground traces, the two ground traces should be routed separately but connected to a single ground at the reference point of the application board to avoid fluctuations in the small-signal ground caused by large currents. Also ensure that the ground traces of external components do not cause variations on the ground voltage. The ground lines must be as short and thick as possible to reduce line impedance.

5. **Thermal Consideration**
   Should by any chance the power dissipation rating be exceeded the rise in temperature of the chip may result in deterioration of the properties of the chip. The absolute maximum rating of the P_D stated in this specification is when the IC is mounted on a 70mm x 70mm x 1.6mm glass epoxy board. In case of exceeding this absolute maximum rating, increase the board size and copper area to prevent exceeding the P_D rating.

6. **Recommended Operating Conditions**
   These conditions represent a range within which the expected characteristics of the IC can be approximately obtained. The electrical characteristics are guaranteed under the conditions of each parameter.

7. **Inrush Current**
   When power is first supplied to the IC, it is possible that the internal logic may be unstable and inrush current may flow instantaneously due to the internal powering sequence and delays, especially if the IC has more than one power supply. Therefore, give special consideration to power coupling capacitance, power wiring, width of ground wiring, and routing of connections.

8. **Operation Under Strong Electromagnetic Field**
   Operating the IC in the presence of a strong electromagnetic field may cause the IC to malfunction.

9. **Testing on Application Boards**
   When testing the IC on an application board, connecting a capacitor directly to a low-impedance output pin may subject the IC to stress. Always discharge capacitors completely after each process or step. The IC's power supply should always be turned off completely before connecting or removing it from the test setup during the inspection process. To prevent damage from static discharge, ground the IC during assembly and use similar precautions during transport and storage.

10. **Inter-pin Short and Mounting Errors**
    Ensure that the direction and position are correct when mounting the IC on the PCB. Incorrect mounting may result in damaging the IC. Avoid nearby pins being shorted to each other especially to ground, power supply and output pin. Inter-pin shorts could be due to many reasons such as metal particles, water droplets (in very humid environment) and unintentional solder bridge deposited in between pins during assembly to name a few.

11. **Unused Input Pins**
    Input pins of an IC are often connected to the gate of a MOS transistor. The gate has extremely high impedance and extremely low capacitance. If left unconnected, the electric field from the outside can easily charge it. The small charge acquired in this way is enough to produce a significant effect on the conduction through the transistor and cause unexpected operation of the IC. So unless otherwise specified, unused input pins should be connected to the power supply or ground line.

© 2013 ROHM Co., Ltd. All rights reserved.

Operational Notes – continued

12. Regarding the Input Pin of the IC

In the construction of this IC, P-N junctions are inevitably formed creating parasitic diodes or transistors. The operation of these parasitic elements can result in mutual interference among circuits, operational faults, or physical damage. Therefore, conditions which cause these parasitic elements to operate, such as applying a voltage to an input pin lower than the ground voltage should be avoided. Furthermore, do not apply a voltage to the input pins when no power supply voltage is applied to the IC. Even if the power supply voltage is applied, make sure that the input pins have voltages within the values specified in the electrical characteristics of this IC.

13. Unused Circuits

When there are unused op-amps, it is recommended that they are connected as in Figure 79, setting the non-inverting input terminal to a potential within the input common mode voltage range (V_{ICM}).

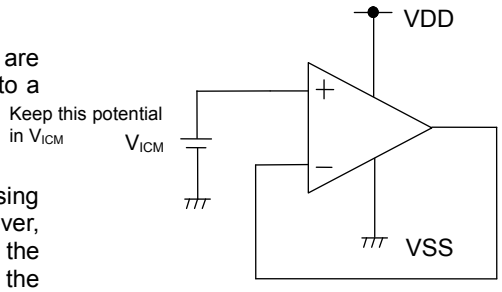

Figure 79. Example of Application Circuit for Unused Op-amp

14. Input Voltage

Applying VDD+0.3V to the input terminal is possible without causing deterioration of the electrical characteristics or destruction. However, this does not ensure normal circuit operation. Please note that the circuit operates normally only when the input voltage is within the common mode input voltage range of the electric characteristics.

15. Power Supply(single/dual)

The operational amplifier operates when the voltage supplied is between VDD and VSS. Therefore, the single supply operational amplifiers can be used as dual supply operational amplifiers as well.

16. Output Capacitor

If a large capacitor is connected between the output pin and VSS pin, current from the charged capacitor will flow into the output pin and may destroy the IC when the VDD pin is shorted to ground or pulled down to 0V. Use a capacitor smaller than 0.1uF between output pin and VSS pin.

17. Oscillation by Output Capacitor

Please pay attention to the oscillation by output capacitor and in designing an application of negative feedback loop circuit with these ICs.

18. Latch up

Be careful of input voltage that exceed the VDD and VSS. When CMOS device have sometimes occur latch up and protect the IC from abnormaly noise.

19. Decupling Capacitor

Insert the decupling capacitance between VDD and VSS, for stable operation of operational amplifier.

20. Radiation Land

The VSON008X2030 package has a radiation land in the center of the back. Please connect to VSS potenital or don't connect to other terminal.

© 2013 ROHM Co., Ltd. All rights reserved.

Marking Diagrams

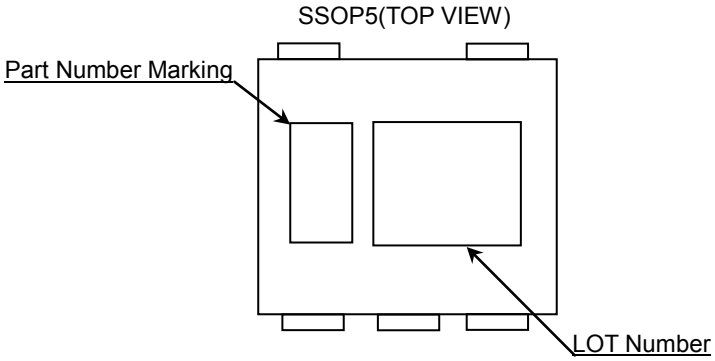

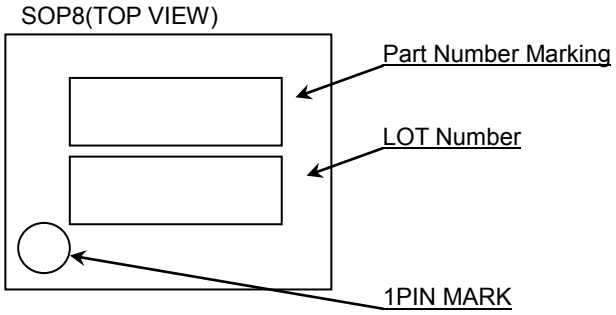

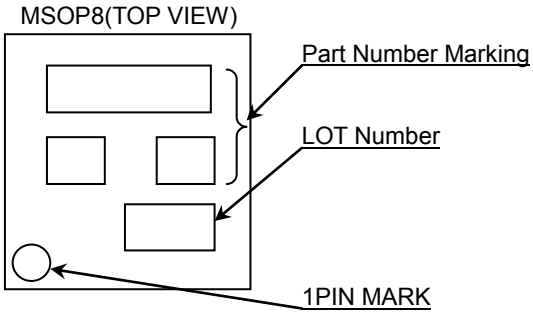

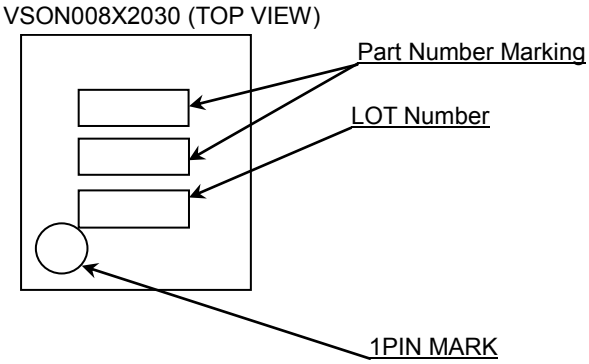

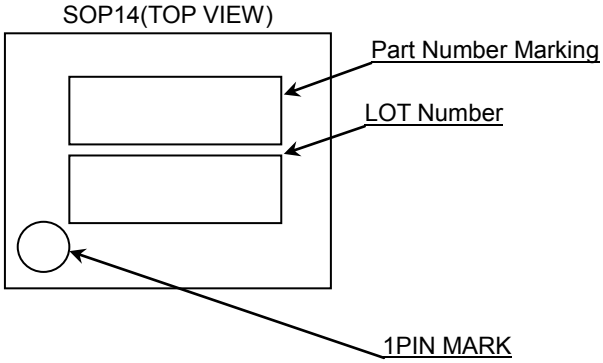

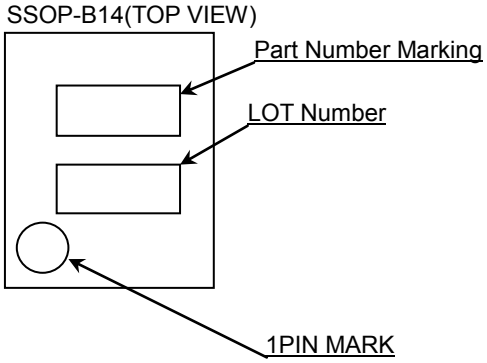

Product Name		Package Type	Marking
BU7261	G	SSOP5	AL
BU7261S	G		AX
BU7262	F	SOP8	7262
	FVM	MSOP8	
	NUX	VSON008X2030	
BU7262S	F	SOP8	7262S
	FVM	MSOP8	
	NUX	VSON008X2030	
BU7264	F	SOP14	BU7264F
	FV	SSOP-B14	7264
BU7264S	F	SOP14	BU7264SF
	FV	SSOP-B14	7264S

© 2013 ROHM Co., Ltd. All rights reserved.

Physical Dimension, Tape and Reel Information

Package Name	SSOP5

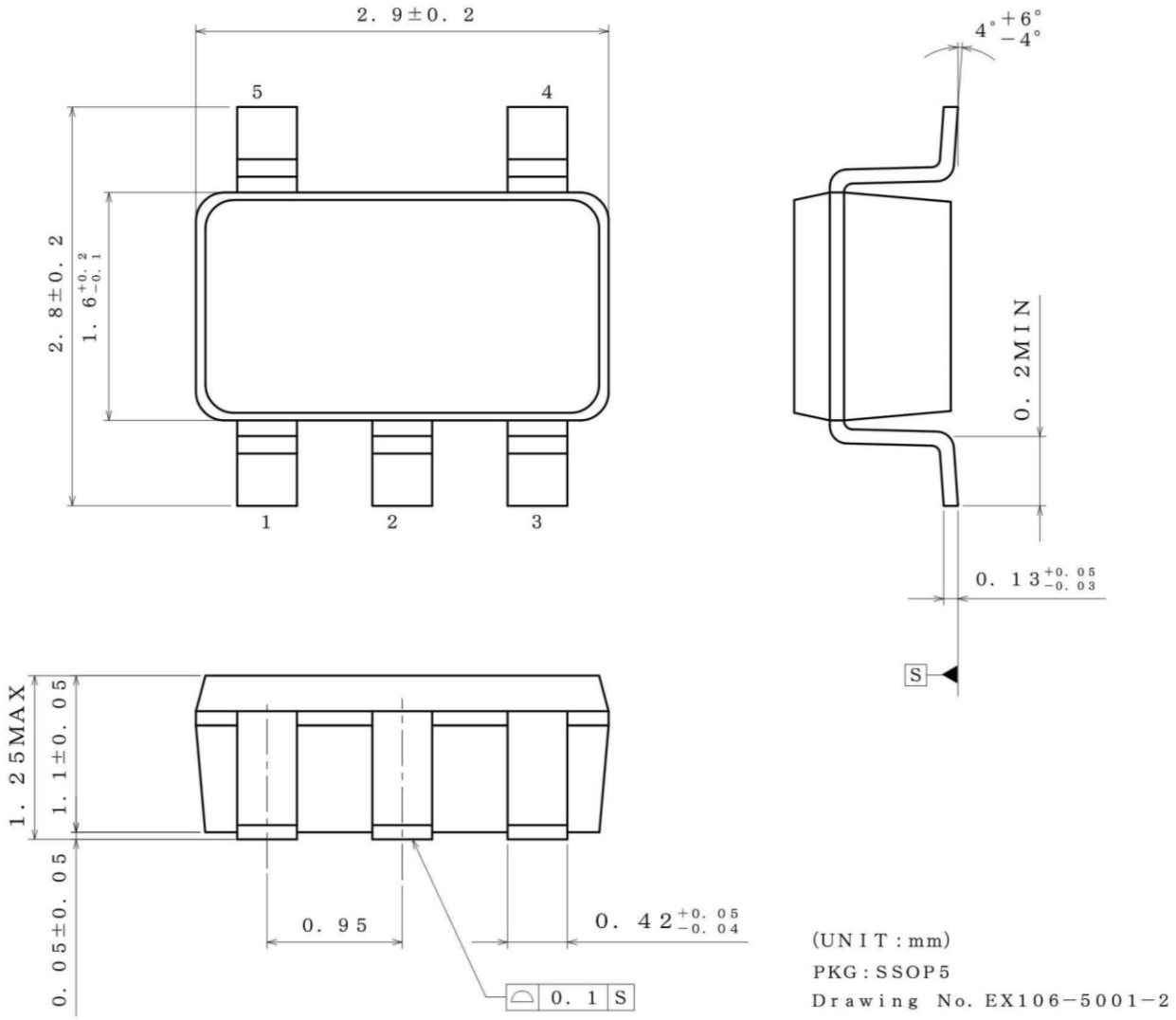

< Tape and Reel Information >

Tape	Embossed carrier tape
Quantity	3000pcs
Direction of feed	TR (The direction is the 1pin of product is at the upper right when you hold reel on the left hand and you pull out the tape on the right hand)

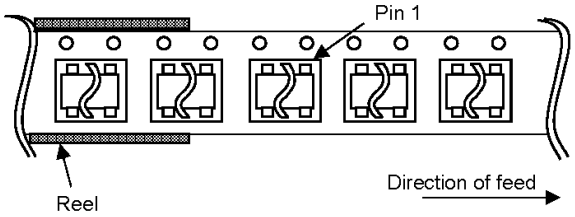

© 2013 ROHM Co., Ltd. All rights reserved.

Physical Dimension, Tape and Reel Information - continued

Package Name	SOP8

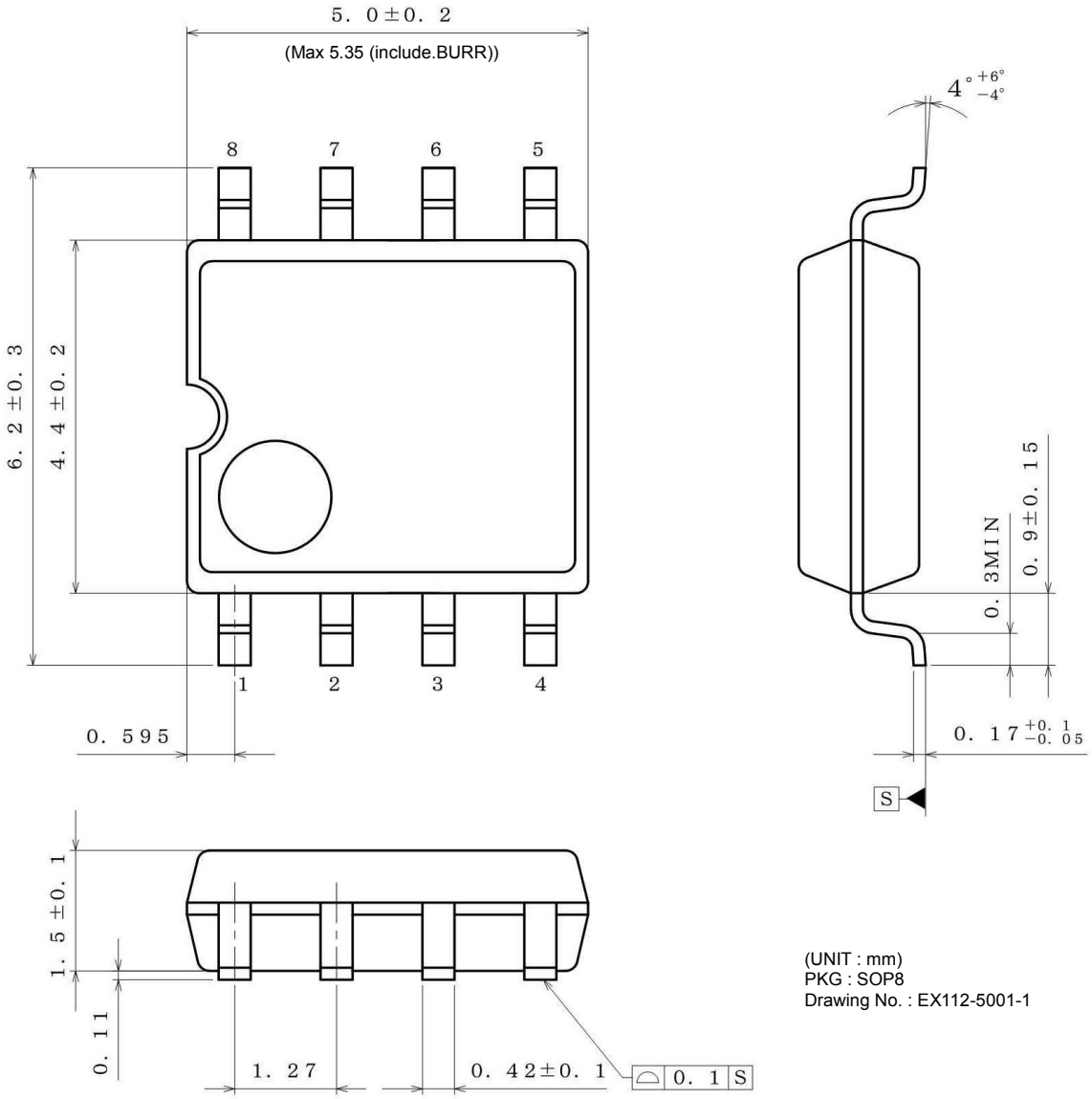

<Tape and Reel information>

Tape	Embossed carrier tape
Quantity	2500pcs
Direction of feed	E2 (The direction is the 1pin of product is at the upper left when you hold reel on the left hand and you pull out the tape on the right hand)

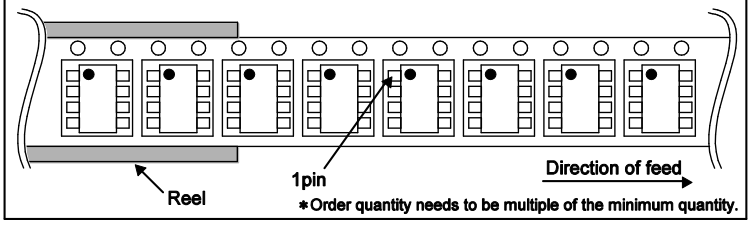

∗Order quantity needs to be multiple of the minimum quantity.

© 2013 ROHM Co., Ltd. All rights reserved.

Physical Dimension, Tape and Reel Information – continued

Package Name	SOP14

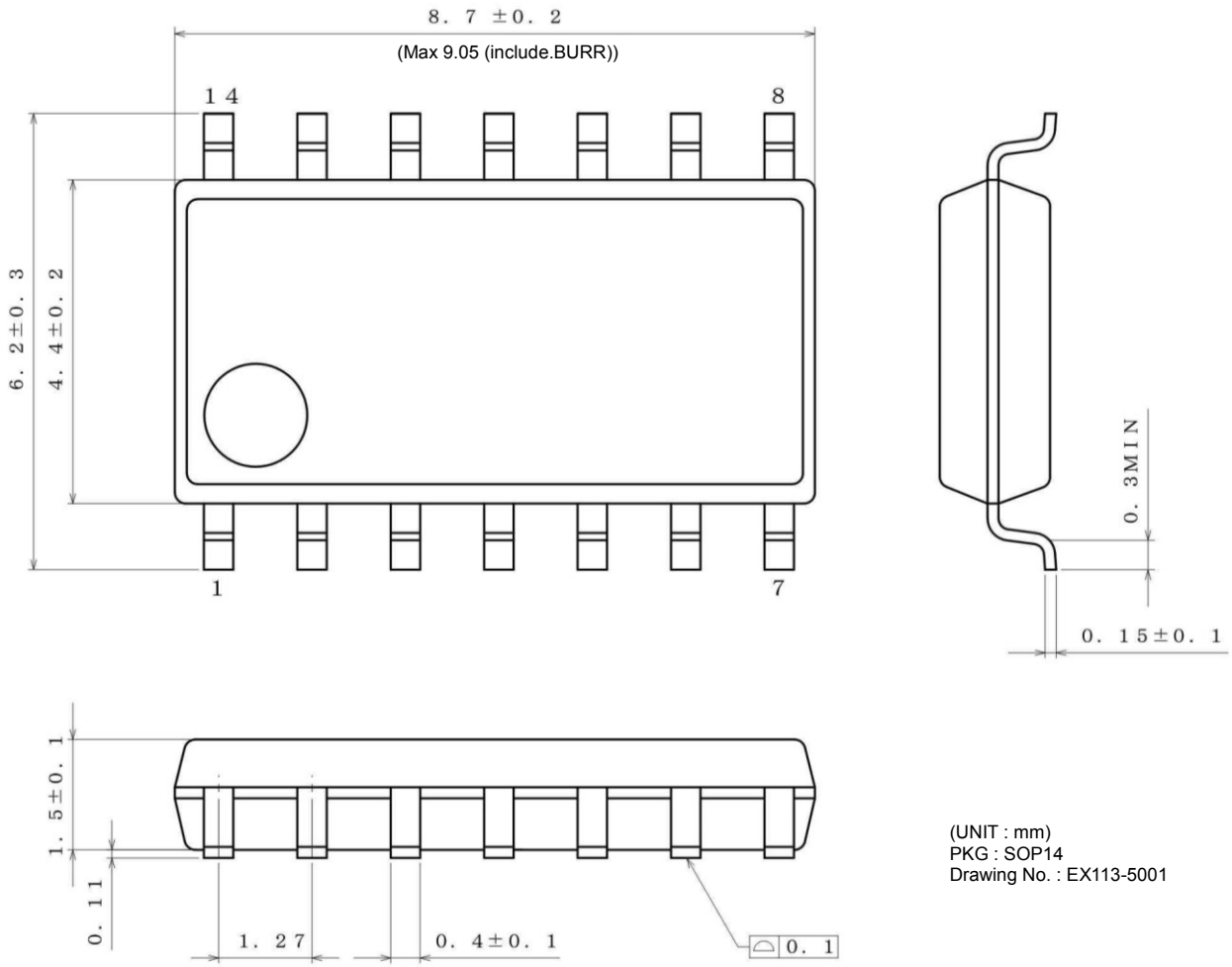

(UNIT : mm)
PKG : SOP14
Drawing No. : EX113-5001

<Tape and Reel information>

Tape	Embossed carrier tape
Quantity	2500pcs
Direction of feed	E2 (The direction is the 1pin of product is at the upper left when you hold reel on the left hand and you pull out the tape on the right hand)

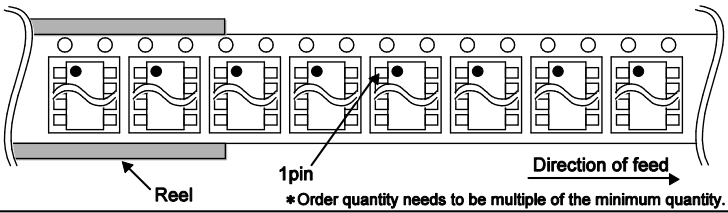

∗Order quantity needs to be multiple of the minimum quantity.

© 2013 ROHM Co., Ltd. All rights reserved.

Physical Dimension, Tape and Reel Information – continued

Package Name	SSOP-B14

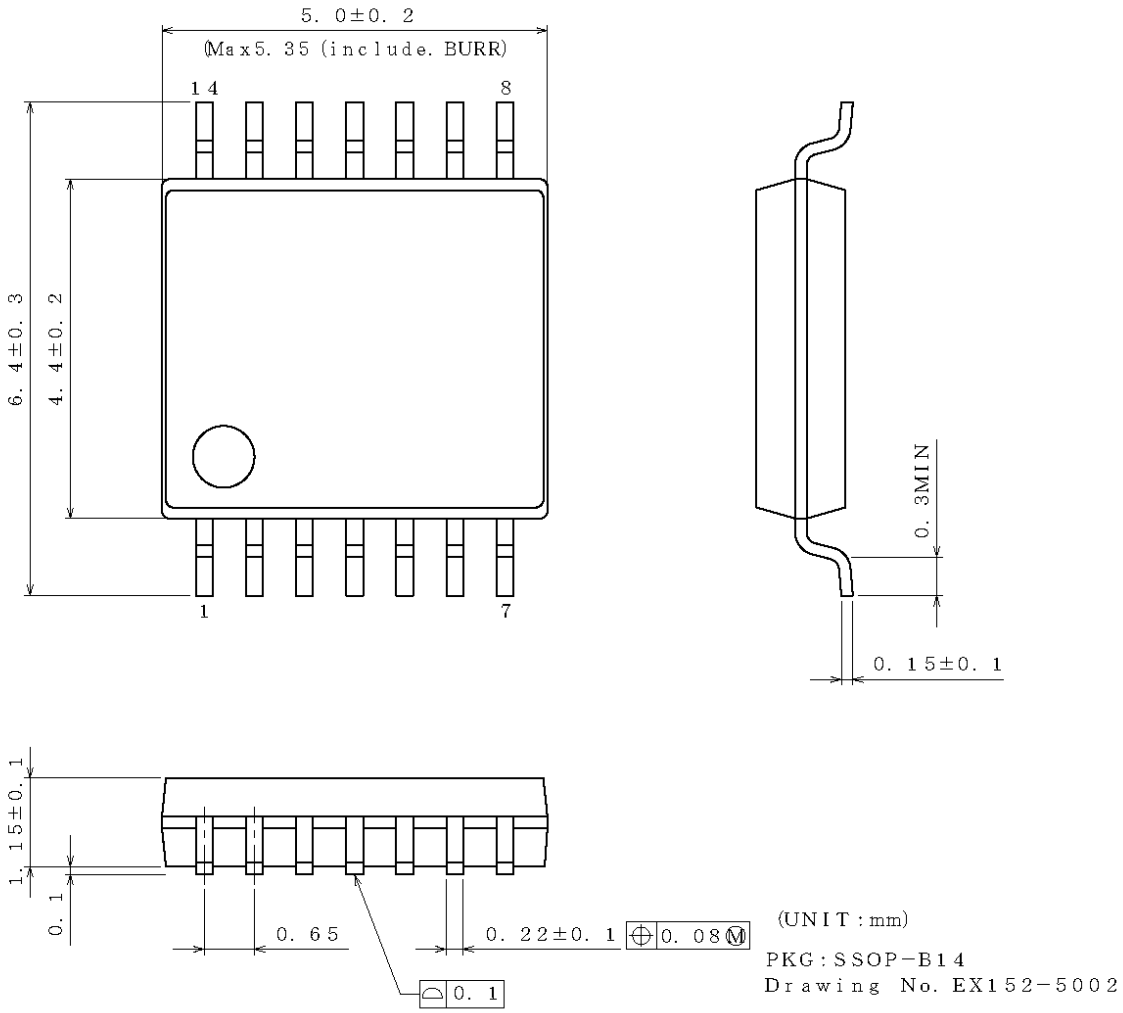

<Tape and Reel information>

Tape	Embossed carrier tape
Quantity	2500pcs
Direction of feed	E2 (The direction is the 1pin of product is at the upper left when you hold reel on the left hand and you pull out the tape on the right hand)

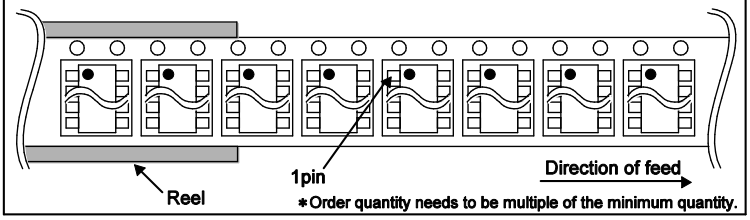

∗Order quantity needs to be multiple of the minimum quantity.

© 2013 ROHM Co., Ltd. All rights reserved.

Physical Dimension, Tape and Reel Information - continued

Package Name	MSOP8

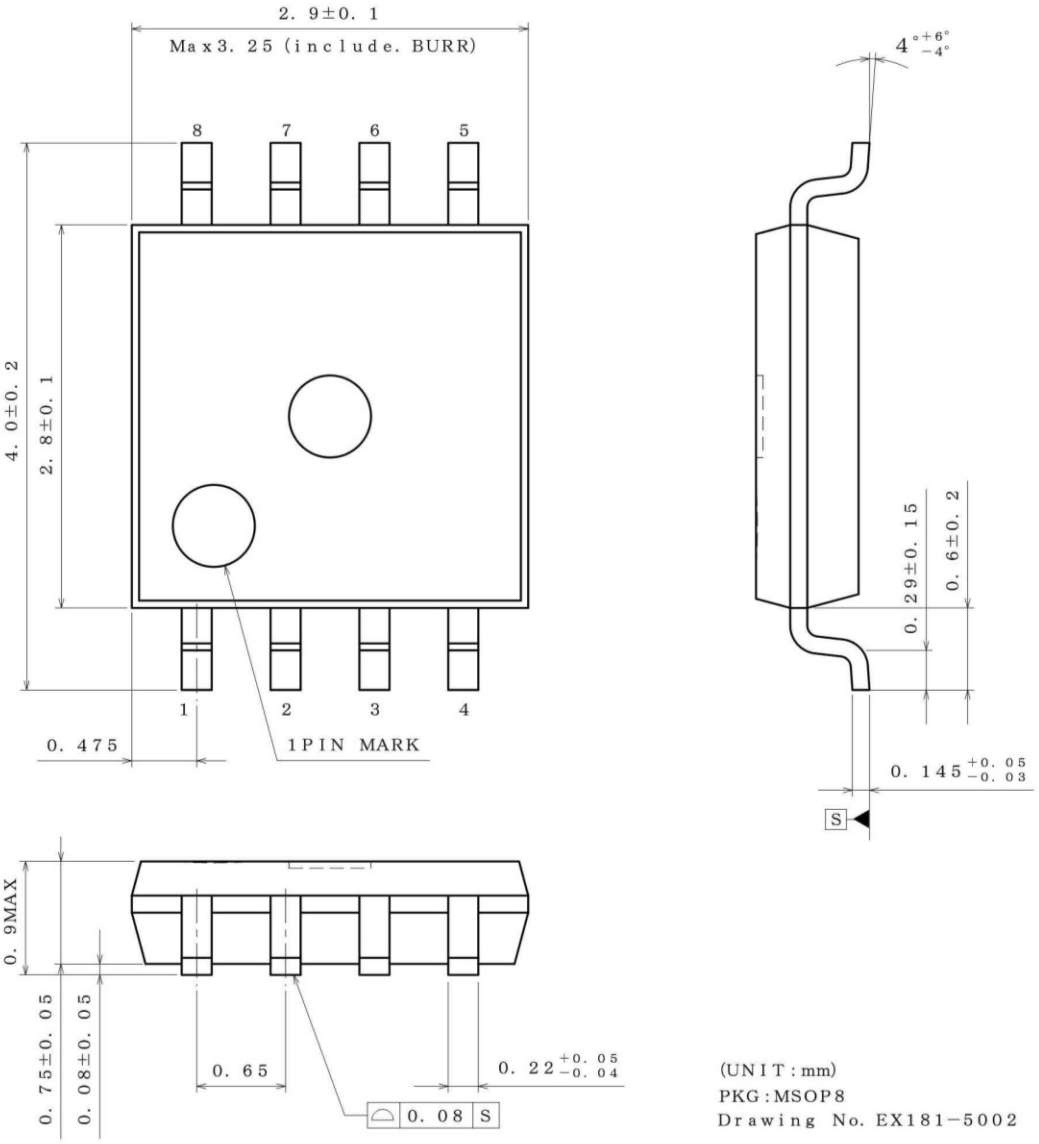

<Tape and Reel information>

Tape	Embossed carrier tape
Quantity	3000pcs
Direction of feed	TR (The direction is the 1pin of product is at the upper right when you hold reel on the left hand and you pull out the tape on the right hand)

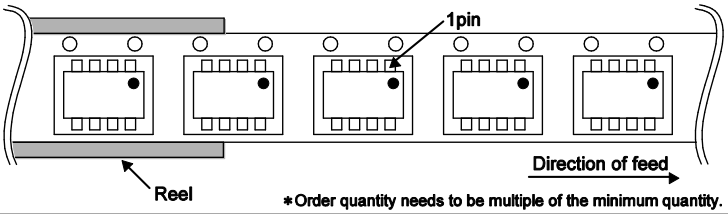

*Order quantity needs to be multiple of the minimum quantity.

© 2013 ROHM Co., Ltd. All rights reserved.

Physical Dimension, Tape and Reel Information – continued

Package Name	VSON008X2030

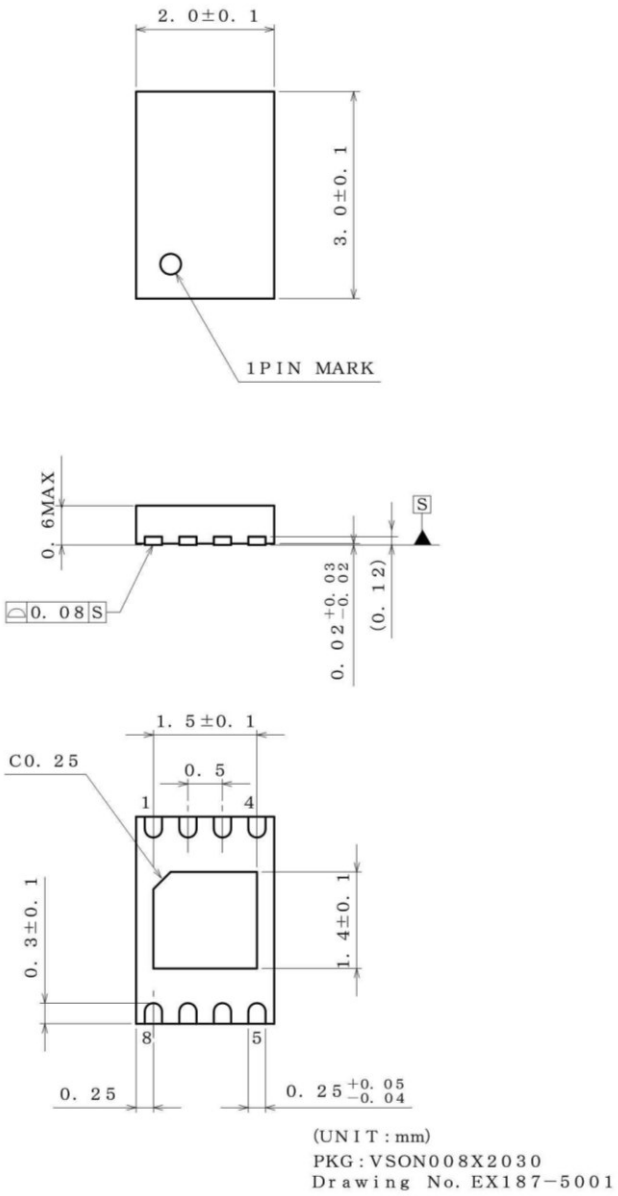

<Tape and Reel information>

Tape	Embossed carrier tape
Quantity	4000pcs
Direction of feed	TR (The direction is the 1pin of product is at the upper right when you hold reel on the left hand and you pull out the tape on the right hand)

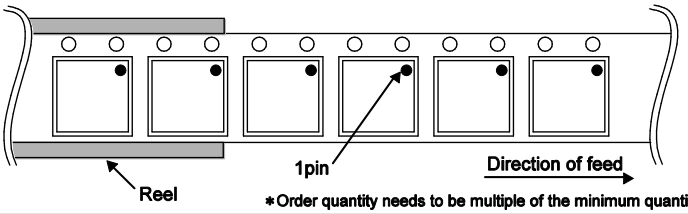

∗Order quantity needs to be multiple of the minimum quantity.

© 2013 ROHM Co., Ltd. All rights reserved.

Land Pattern Data

All dimensions in mm

PKG	Land pitch e	Land space MIE	Land length ≧ℓ 2	Land width b2
SSOP5	0.95	2.4	1.0	0.6
SOP8 SOP14	1.27	4.60	1.10	0.76
SSOP-B14	0.65	4.60	1.20	0.35
MSOP8	0.65	2.62	0.99	0.35
VSON008X2030	0.50	2.20	0.70	0.27

SSOP5

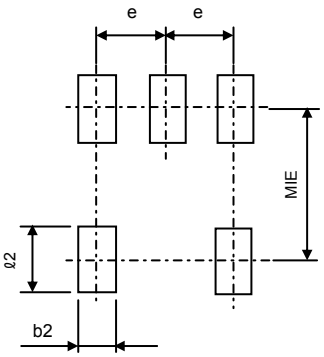

SOP8, MSOP8, SOP14, SSOP-B14

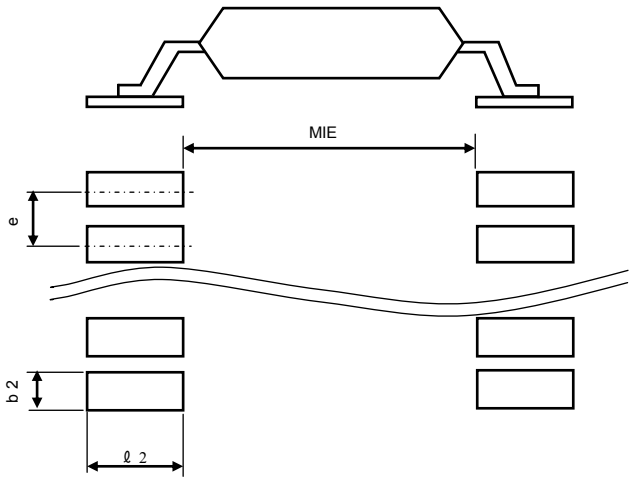

VSON008X2030

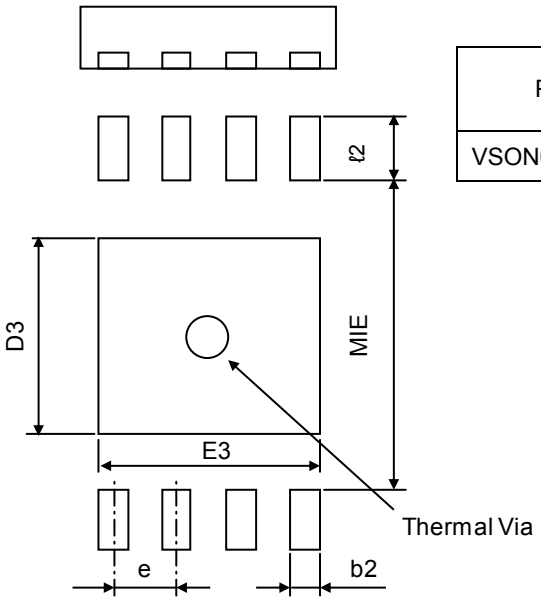

PKG	Radiation Land Length D3	Radiation Land Width E3	Thermal Via	
			Pitch	Diameter
VSON008X2030	1.2	1.6	-	Φ0.3

© 2013 ROHM Co., Ltd. All rights reserved.

Revision History

Date	Revision	Changes
25.Sep.2012	001	New Release
06.Mar.2014	002	Revision is updated only
18.Apr.2014	003	Addition of BU7264FV,BU7264SFV in the Pin Configuration(Page 2.)
03.Dec.2014	004	Correction of Figure 7, 9, 30, 32, 34, 53, 55. Correction of Note 29～33. Correction of Note31 Power Dissipation(Page 33)

© 2013 ROHM Co., Ltd. All rights reserved.

Notice

Precaution on using ROHM Products

1. Our Products are designed and manufactured for application in ordinary electronic equipments (such as AV equipment, OA equipment, telecommunication equipment, home electronic appliances, amusement equipment, etc.). If you intend to use our Products in devices requiring extremely high reliability (such as medical equipment (Note 1), transport equipment, traffic equipment, aircraft/spacecraft, nuclear power controllers, fuel controllers, car equipment including car accessories, safety devices, etc.) and whose malfunction or failure may cause loss of human life, bodily injury or serious damage to property ("Specific Applications"), please consult with the ROHM sales representative in advance. Unless otherwise agreed in writing by ROHM in advance, ROHM shall not be in any way responsible or liable for any damages, expenses or losses incurred by you or third parties arising from the use of any ROHM's Products for Specific Applications.

(Note1) Medical Equipment Classification of the Specific Applications

JAPAN	USA	EU	CHINA
CLASSⅢ	CLASSⅢ	CLASSⅡb	CLASSⅢ
CLASSⅣ		CLASSⅢ	

2. ROHM designs and manufactures its Products subject to strict quality control system. However, semiconductor products can fail or malfunction at a certain rate. Please be sure to implement, at your own responsibilities, adequate safety measures including but not limited to fail-safe design against the physical injury, damage to any property, which a failure or malfunction of our Products may cause. The following are examples of safety measures:
   [a] Installation of protection circuits or other protective devices to improve system safety
   [b] Installation of redundant circuits to reduce the impact of single or multiple circuit failure

3. Our Products are designed and manufactured for use under standard conditions and not under any special or extraordinary environments or conditions, as exemplified below. Accordingly, ROHM shall not be in any way responsible or liable for any damages, expenses or losses arising from the use of any ROHM's Products under any special or extraordinary environments or conditions. If you intend to use our Products under any special or extraordinary environments or conditions (as exemplified below), your independent verification and confirmation of product performance, reliability, etc, prior to use, must be necessary:
   [a] Use of our Products in any types of liquid, including water, oils, chemicals, and organic solvents
   [b] Use of our Products outdoors or in places where the Products are exposed to direct sunlight or dust
   [c] Use of our Products in places where the Products are exposed to sea wind or corrosive gases, including Cl_2, H_2S, NH_3, SO_2, and NO_2
   [d] Use of our Products in places where the Products are exposed to static electricity or electromagnetic waves
   [e] Use of our Products in proximity to heat-producing components, plastic cords, or other flammable items
   [f] Sealing or coating our Products with resin or other coating materials
   [g] Use of our Products without cleaning residue of flux (even if you use no-clean type fluxes, cleaning residue of flux is recommended); or Washing our Products by using water or water-soluble cleaning agents for cleaning residue after soldering
   [h] Use of the Products in places subject to dew condensation

4. The Products are not subject to radiation-proof design.

5. Please verify and confirm characteristics of the final or mounted products in using the Products.

6. In particular, if a transient load (a large amount of load applied in a short period of time, such as pulse. is applied, confirmation of performance characteristics after on-board mounting is strongly recommended. Avoid applying power exceeding normal rated power; exceeding the power rating under steady-state loading condition may negatively affect product performance and reliability.

7. De-rate Power Dissipation (Pd) depending on Ambient temperature (Ta). When used in sealed area, confirm the actual ambient temperature.

8. Confirm that operation temperature is within the specified range described in the product specification.

9. ROHM shall not be in any way responsible or liable for failure induced under deviant condition from what is defined in this document.

Precaution for Mounting / Circuit board design

1. When a highly active halogenous (chlorine, bromine, etc.) flux is used, the residue of flux may negatively affect product performance and reliability.

2. In principle, the reflow soldering method must be used on a surface-mount products, the flow soldering method must be used on a through hole mount products. If the flow soldering method is preferred on a surface-mount products, please consult with the ROHM representative in advance.

For details, please refer to ROHM Mounting specification

© 2013 ROHM Co., Ltd. All rights reserved.

Precautions Regarding Application Examples and External Circuits

1. If change is made to the constant of an external circuit, please allow a sufficient margin considering variations of the characteristics of the Products and external components, including transient characteristics, as well as static characteristics.

2. You agree that application notes, reference designs, and associated data and information contained in this document are presented only as guidance for Products use. Therefore, in case you use such information, you are solely responsible for it and you must exercise your own independent verification and judgment in the use of such information contained in this document. ROHM shall not be in any way responsible or liable for any damages, expenses or losses incurred by you or third parties arising from the use of such information.

Precaution for Electrostatic

This Product is electrostatic sensitive product, which may be damaged due to electrostatic discharge. Please take proper caution in your manufacturing process and storage so that voltage exceeding the Products maximum rating will not be applied to Products. Please take special care under dry condition (e.g. Grounding of human body / equipment / solder iron, isolation from charged objects, setting of Ionizer, friction prevention and temperature / humidity control).

Precaution for Storage / Transportation

1. Product performance and soldered connections may deteriorate if the Products are stored in the places where:
   [a] the Products are exposed to sea winds or corrosive gases, including Cl2, H2S, NH3, SO2, and NO2
   [b] the temperature or humidity exceeds those recommended by ROHM
   [c] the Products are exposed to direct sunshine or condensation
   [d] the Products are exposed to high Electrostatic

2. Even under ROHM recommended storage condition, solderability of products out of recommended storage time period may be degraded. It is strongly recommended to confirm solderability before using Products of which storage time is exceeding the recommended storage time period.

3. Store / transport cartons in the correct direction, which is indicated on a carton with a symbol. Otherwise bent leads may occur due to excessive stress applied when dropping of a carton.

4. Use Products within the specified time after opening a humidity barrier bag. Baking is required before using Products of which storage time is exceeding the recommended storage time period.

Precaution for Product Label

QR code printed on ROHM Products label is for ROHM's internal use only.

Precaution for Disposition

When disposing Products please dispose them properly using an authorized industry waste company.

Precaution for Foreign Exchange and Foreign Trade act

Since our Products might fall under controlled goods prescribed by the applicable foreign exchange and foreign trade act, please consult with ROHM representative in case of export.

Precaution Regarding Intellectual Property Rights

1. All information and data including but not limited to application example contained in this document is for reference only. ROHM does not warrant that foregoing information or data will not infringe any intellectual property rights or any other rights of any third party regarding such information or data. ROHM shall not be in any way responsible or liable for infringement of any intellectual property rights or other damages arising from use of such information or data.:

2. No license, expressly or implied, is granted hereby under any intellectual property rights or other rights of ROHM or any third parties with respect to the information contained in this document.

Other Precaution

1. This document may not be reprinted or reproduced, in whole or in part, without prior written consent of ROHM.

2. The Products may not be disassembled, converted, modified, reproduced or otherwise changed without prior written consent of ROHM.

3. In no event shall you use in any way whatsoever the Products and the related technical information contained in the Products or this document for any military purposes, including but not limited to, the development of mass-destruction weapons.

4. The proper names of companies or products described in this document are trademarks or registered trademarks of ROHM, its affiliated companies or third parties.

© 2013 ROHM Co., Ltd. All rights reserved.

General Precaution

1. Before you use our Products, you are requested to carefully read this document and fully understand its contents. ROHM shall not be in any way responsible or liable for failure, malfunction or accident arising from the use of any ROHM's Products against warning, caution or note contained in this document.

2. All information contained in this document is current as of the issuing date and subject to change without any prior notice. Before purchasing or using ROHM's Products, please confirm the latest information with a ROHM sales representative.

3. The information contained in this document is provided on an "as is" basis and ROHM does not warrant that all information contained in this document is accurate and/or error-free. ROHM shall not be in any way responsible or liable for any damages, expenses or losses incurred by you or third parties resulting from inaccuracy or errors of or concerning such information.

© 2014 ROHM Co., Ltd. All rights reserved.

Мы молодая и активно развивающаяся компания в области поставок электронных компонентов. Мы поставляем электронные компоненты отечественного и импортного производства напрямую от производителей и с крупнейших складов мира.

Благодаря сотрудничеству с мировыми поставщиками мы осуществляем комплексные и плановые поставки широчайшего спектра электронных компонентов.

Собственная эффективная логистика и склад в обеспечивает надежную поставку продукции в точно указанные сроки по всей России.

Мы осуществляем техническую поддержку нашим клиентам и предпродажную проверку качества продукции. На все поставляемые продукты мы предоставляем гарантию .

Осуществляем поставки продукции под контролем ВП МО РФ на предприятия военно-промышленного комплекса России , а также работаем в рамках 275 ФЗ с открытием отдельных счетов в уполномоченном банке. Система менеджмента качества компании соответствует требованиям ГОСТ ISO 9001.

Минимальные сроки поставки, гибкие цены, неограниченный ассортимент и индивидуальный подход к клиентам являются основой для выстраивания долгосрочного и эффективного сотрудничества с предприятиями радиоэлектронной промышленности, предприятиями ВПК и научно-исследовательскими институтами России.

С нами вы становитесь еще успешнее!

Наши контакты:

Телефон: +7 812 627 14 35

Электронная почта: sales@st-electron.ru

Адрес: 198099, Санкт-Петербург, Промышленная ул, дом № 19, литера Н, помещение 100-Н Офис 331