EM-93444-0040

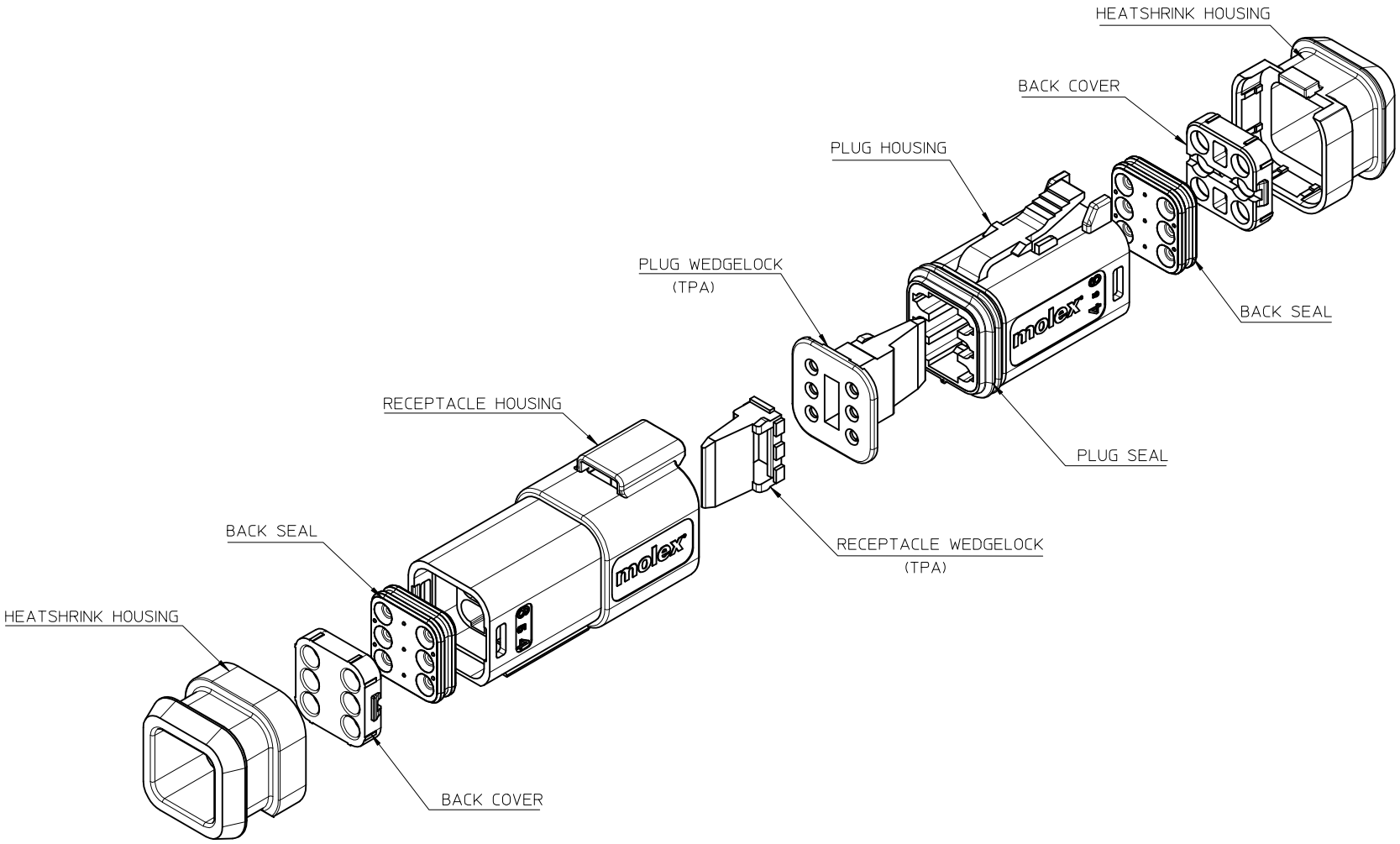

NOTES

1. SEE SHEETS 2 TO 7 FOR UNSPECIFIED NOTES, DIMENSIONS AND PART NUMBERS

PROPOSED
EC NO: IPG2015-1746 2015/04/07
DRWN: JFLETCHER
CHKD:
APPR: JWALLACE 2015/07/16
DESCRIPTION
REV
3

QUALITY SYMBOLS
▼=0
Ⓒ=0

GENERAL TOLERANCES (UNLESS SPECIFIED)

	mm	INCH
4 PLACES	± ---	± ---
3 PLACES	± ---	± ---
2 PLACES	± 0.10	± ---
1 PLACE	± 0.20	± ---
0 PLACE	± ---	± ---

ANGULAR ± 2 °

DRAFT WHERE APPLICABLE MUST REMAIN WITHIN DIMENSIONS

DIMENSION STYLE: MM ONLY
SCALE: 1.5:1
DESIGN UNITS: METRIC
THIRD ANGLE PROJECTION

DRAWN BY: JFLETCHER DATE: 2014/04/23
CHECKED BY: DATE:
APPROVED BY: JWALLACE DATE: 2014/10/01

TITLE: 6CCT ML-XT CV CONNECTOR

molex

MATERIAL NO.: SEE NOTES
DOCUMENT NO.: SD-93443-004
SHEET NO.: 1 OF 7

SIZE: A3

THIS DRAWING CONTAINS INFORMATION THAT IS PROPRIETARY TO MOLEX INCORPORATED AND SHOULD NOT BE USED WITHOUT WRITTEN PERMISSION

6CCT RECEPTACLE CONNECTOR

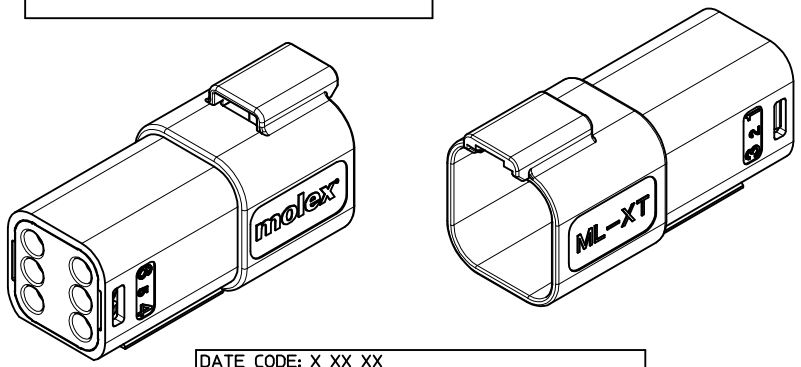

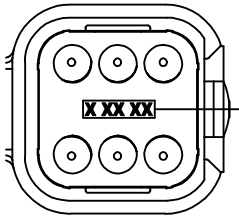

DETAIL 1
(ROTATED 90°)

DATE CODE: X XX XX
X —— DAY: 1 - 7
X, X — WEEK: 01 - 52
X, X — YEAR: 00 - 99
EXAMPLE: 11315 = DAY 1 OF WEEK 13 OF YEAR 15
i.e. 23rd OF MARCH 2015

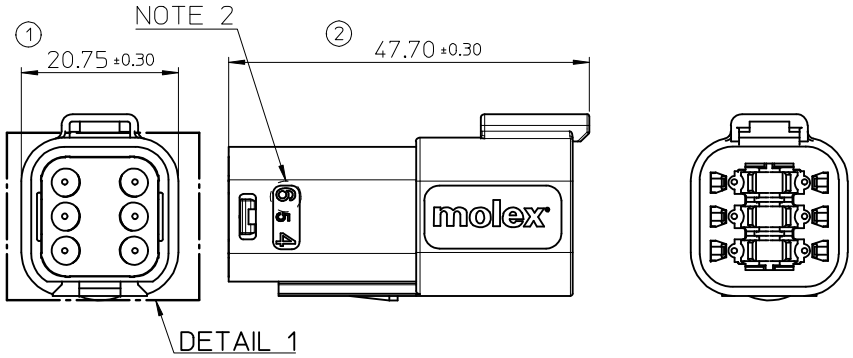

6CCT RECEPTACLE CONNECTOR WITH HEATSHRINK HOUSING ULTRASONICALLY WELDED IN PLACE

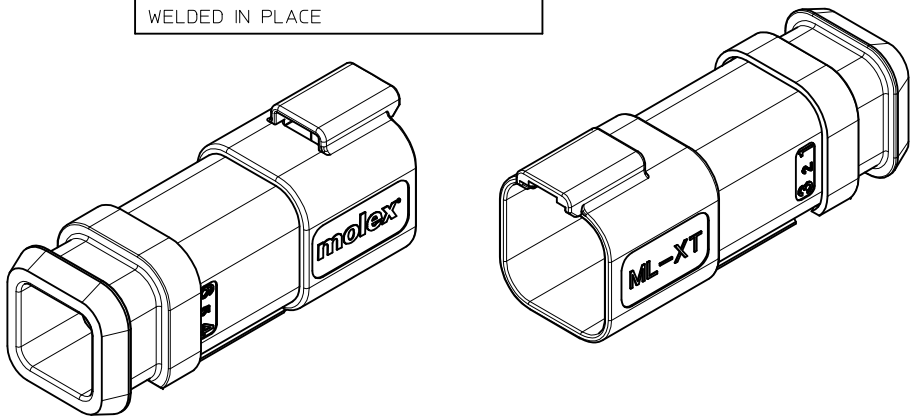

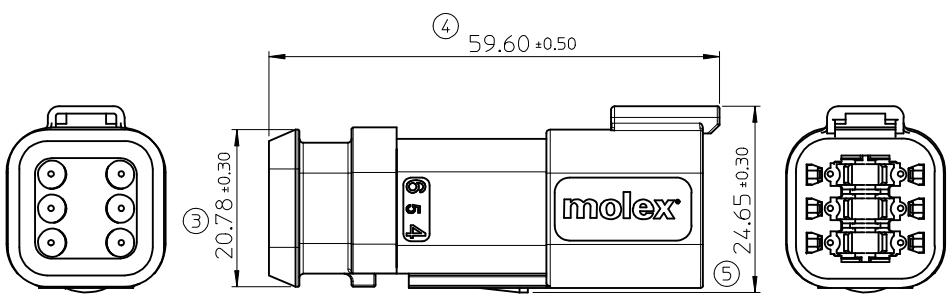

NOTES
1. MATERIAL
   HOUSING: NYLON 30%GF
   SEAL: HIGH CONSISTENCY RUBBER
2. CIRCUIT IDENTIFICATION
3. JACKET RANGE LARGE = Ø2.7MM TO 3.6MM (SEAL COLOUR: LIGHT BLUE)
   JACKET RANGE SMALL = Ø1.4MM TO 2.7MM (SEAL COLOUR: BURNT ORANGE)
4. SEE SHEET 3 FOR FINAL PART NUMBER DESIGNATION
5. SEE PS-93443-001 FOR PRODUCT SPECIFICATION
6. SEE PK-93443-001 FOR PACKAGING SPECIFICATION

LAST INSPECTION NUMBER: 5
INSPECTION NUMBERS 1-50 RESERVED FOR SHEET 2

SEE SHEET 1	EC NO: IPG2015-1746	2015/04/07	
3	DRWN: JFLETCHER	2015/07/16	
	CH'KD:		
	APPR: JWALLACE		DESCRIPTION
			REV

QUALITY SYMBOLS
▼=0
Ⓒ=0

GENERAL TOLERANCES (UNLESS SPECIFIED)

	mm	INCH
4 PLACES	± ---	± ---
3 PLACES	± ---	± ---
2 PLACES	± 0.10	± ---
1 PLACE	± 0.20	± ---
0 PLACE	± ---	± ---

ANGULAR ± 2 °
DRAFT WHERE APPLICABLE MUST REMAIN WITHIN DIMENSIONS

DIMENSION STYLE	MM ONLY
SCALE	1.5:1
DESIGN UNITS	METRIC
	THIRD ANGLE PROJECTION
DRAWN BY	JFLETCHER
DATE	2014/04/23
CHECKED BY	
DATE	
APPROVED BY	JWALLACE
DATE	2014/10/01
MATERIAL NO.	SEE NOTES
TITLE	6CCT ML-XT CV CONNECTOR
DOCUMENT NO.	SD-93443-004
SHEET NO.	2 OF 7
SIZE	A3

THIS DRAWING CONTAINS INFORMATION THAT IS PROPRIETARY TO MOLEX INCORPORATED AND SHOULD NOT BE USED WITHOUT WRITTEN PERMISSION

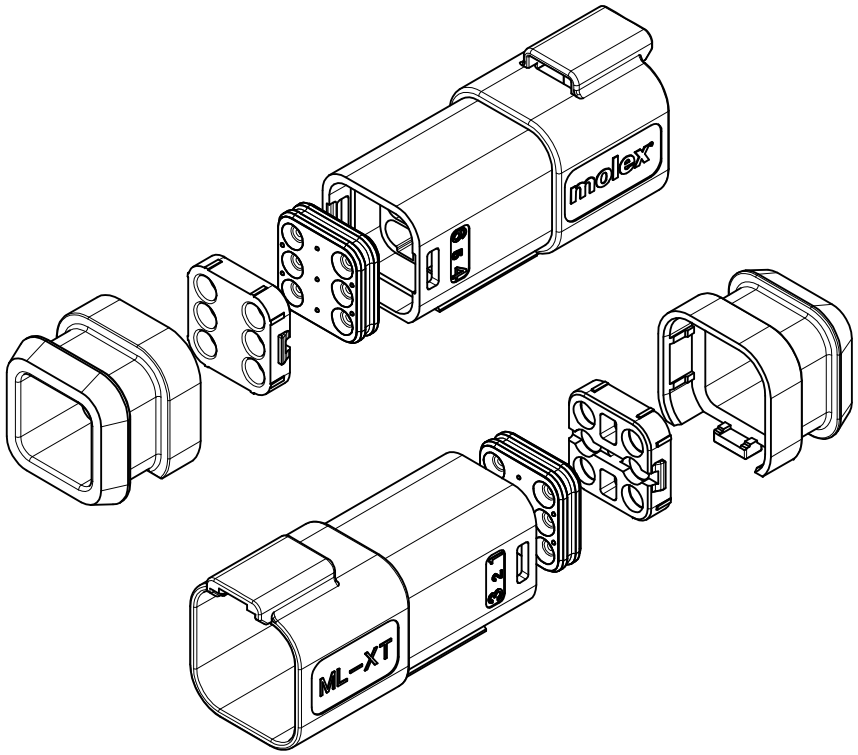

6CCT RECEPTACLE CONNECTOR

93444 | 4 | _ | _ _

SERIES NO.

CIRCUIT SIZE
4 = 6cct

ASSEMBLY OPTIONS
1 = RECEP ASSEMBLY FOR WIRE JACKET RANGE: Ø1.4mm-2.7mm (NOTE 2)
2 = RECEP ASSEMBLY FOR WIRE JACKET RANGE: Ø2.7mm-3.6mm (NOTE 2)
5 = RECEP ASSEMBLY & HEATSHR FOR WIRE JACKET RANGE: Ø1.4mm-2.7mm (NOTE 3)
6 = RECEP ASSEMBLY & HEATSHR FOR WIRE JACKET RANGE: Ø2.7mm-3.6mm (NOTE 3)

COLOUR
01=BLACK
02=GREY 06=WHITE
03=GREEN 07=BROWN
04=BLUE 08=ORANGE
05=YELLOW 09=RED

EXAMPLE:
6cct RECEP BLACK WITH LARGE SEAL AND HEATSHRINK 93444-4601

NOTES
1. SEE SHEET 2 FOR UNSPECIFIED NOTES AND DIMENSIONS
2. BACK COVER HOUSING COLOUR: BLACK
3. HEATSHRINK HOUSING COLOUR: BLACK

SEE SHEET 1
EC NO: IPG2015-1746 2015/04/07
DRWN: JFLETCHER
CH'KD:
APPR: JWALLACE 2015/07/16
DESCRIPTION
REV
3

QUALITY SYMBOLS
▼=0
Ⓒ=0

GENERAL TOLERANCES (UNLESS SPECIFIED)

	mm	INCH
4 PLACES	± ---	± ---
3 PLACES	± ---	± ---
2 PLACES	± 0.10	± ---
1 PLACE	± 0.20	± ---
0 PLACE	± ---	± ---

ANGULAR ± 2 °
DRAFT WHERE APPLICABLE MUST REMAIN WITHIN DIMENSIONS

DIMENSION STYLE: MM ONLY
SCALE: 1.5:1
DESIGN UNITS: METRIC
THIRD ANGLE PROJECTION

DRAWN BY: JFLETCHER DATE: 2014/04/23
CHECKED BY: DATE:
APPROVED BY: JWALLACE DATE: 2014/10/01

TITLE: 6CCT ML-XT CV CONNECTOR

molex

MATERIAL NO.: SEE NOTES
DOCUMENT NO.: SD-93443-004
SHEET NO.: 3 OF 7
SIZE: A3

THIS DRAWING CONTAINS INFORMATION THAT IS PROPRIETARY TO MOLEX INCORPORATED AND SHOULD NOT BE USED WITHOUT WRITTEN PERMISSION

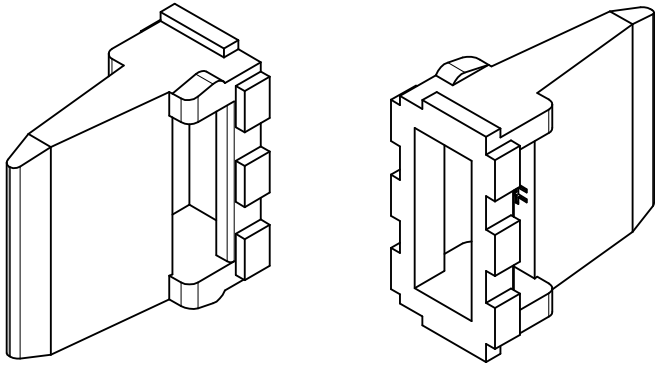

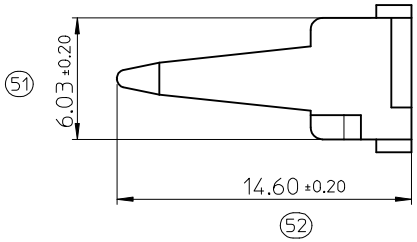

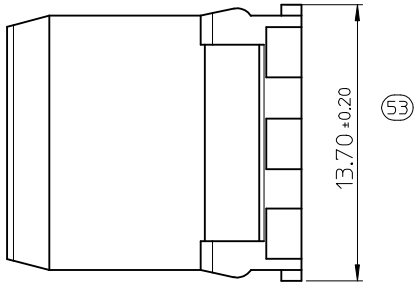

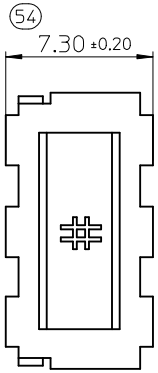

6CCT RECEPTACLE WEDGELOCK

93447	4	0	_ _

SERIES NO.

CIRCUIT SIZE
4 = 6cct

COLOUR/CODING
03=GREEN

NOTES
1. MATERIAL
   HOUSING: NYLON 30% GF
2. INSPECTION NUMBERS 51-100
   RESERVED FOR SHEET 4
LAST INSPECTION NUMBER 54

SEE SHEET 1
EC NO: IPG2015-1746 2015/04/07
DRWN: JFLETCHER 2015/07/16
CH'KD:
APPR: JWALLACE
DESCRIPTION
REV
3

QUALITY SYMBOLS
▼=0
Ⓒ=0

GENERAL TOLERANCES (UNLESS SPECIFIED)

	mm	INCH
4 PLACES	± ---	± ---
3 PLACES	± ---	± ---
2 PLACES	± 0.10	± ---
1 PLACE	± 0.20	± ---
0 PLACE	± ---	± ---

ANGULAR ± 2 °

DRAFT WHERE APPLICABLE MUST REMAIN WITHIN DIMENSIONS

DIMENSION STYLE: MM ONLY
SCALE: 2:1
DESIGN UNITS: METRIC
THIRD ANGLE PROJECTION

DRAWN BY: JFLETCHER DATE: 2014/04/23
CHECKED BY: DATE:
APPROVED BY: JWALLACE DATE: 2014/10/01

TITLE: 6CCT ML-XT CV CONNECTOR

molex

MATERIAL NO.: SEE NOTES
DOCUMENT NO.: SD-93443-004
SHEET NO.: 4 OF 7
SIZE: A3

THIS DRAWING CONTAINS INFORMATION THAT IS PROPRIETARY TO MOLEX INCORPORATED AND SHOULD NOT BE USED WITHOUT WRITTEN PERMISSION

6CCT PLUG CONNECTOR

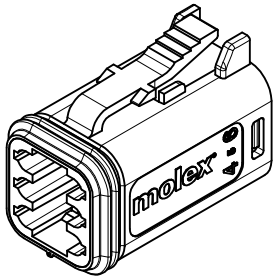

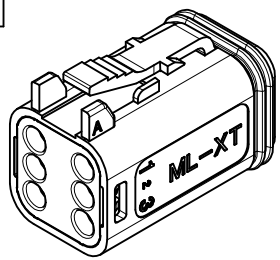

DATE CODE: X XX XX
X —— DAY: 1 - 7
X, X — WEEK: 01 - 52
X, X — YEAR: 00 - 99
EXAMPLE: 11315 = DAY 1 OF WEEK 13 OF YEAR 15
i.e. 23rd OF MARCH 2015

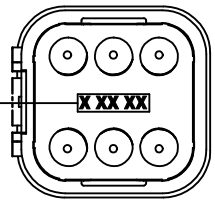

DETAIL 2
(ROTATED 90°)

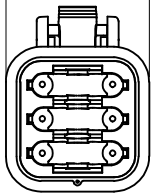

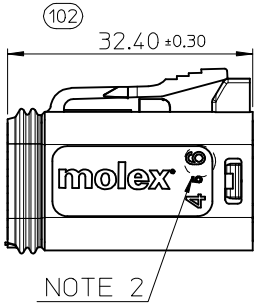

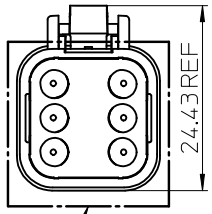

6CCT PLUG CONNECTOR WITH
HEATSHRINK HOUSING ULTRASONICALLY
WELDED IN PLACE

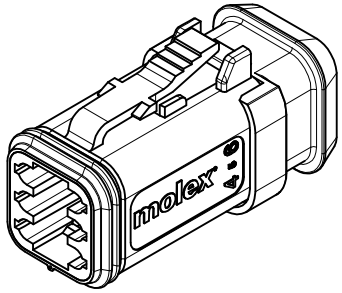

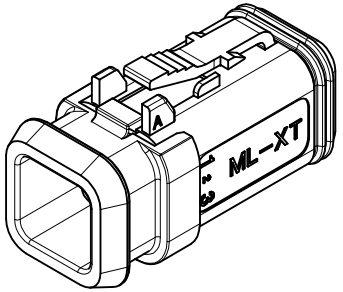

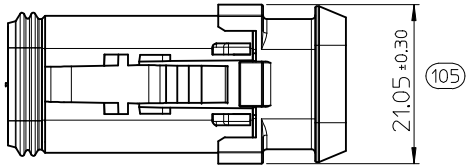

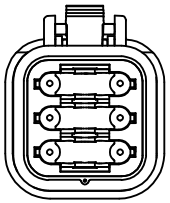

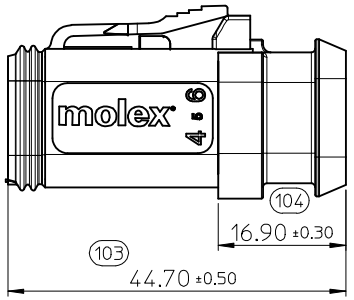

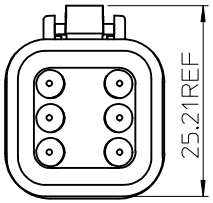

NOTES
1. MATERIAL:
   HOUSING: NYLON 30% GF
   PLUG SEAL: SILICONE RUBBER
   BACK SEAL: HIGH CONSISTENCY RUBBER
2. CIRCUIT IDENTIFICATION
3. JACKET RANGE LARGE = ø2.7MM TO 3.6MM (SEAL COLOUR: LIGHT BLUE)
   JACKET RANGE SMALL = ø1.4MM TO 2.7MM (SEAL COLOUR: BURNT ORANGE)
4. SEE SHEET 6 FOR FINAL PART NUMBER DESIGNATION
5. INSPECTION NUMBERS 101-150 RESERVED FOR SHEET 5
LAST INSPECTION NUMBER 105

REV	DESCRIPTION	
3	SEE SHEET 1	
	EC NO: IPG2015-1746	2015/04/07
	DRWN: JFLETCHER	2015/07/16
	CH'KD:	
	APPR: JWALLACE	

QUALITY SYMBOLS
▼=0
Ⓒ=0

GENERAL TOLERANCES (UNLESS SPECIFIED)

	mm	INCH
4 PLACES	± ---	± ---
3 PLACES	± ---	± ---
2 PLACES	± 0.10	± ---
1 PLACE	± 0.20	± ---
0 PLACE	± ---	± ---
ANGULAR ± 2 °		

DRAFT WHERE APPLICABLE MUST REMAIN WITHIN DIMENSIONS

DIMENSION STYLE	MM ONLY
SCALE	1.5:1
DESIGN UNITS	METRIC
	THIRD ANGLE PROJECTION
DRAWN BY	JFLETCHER
DATE	2014/04/23
CHECKED BY	
DATE	
APPROVED BY	JWALLACE
DATE	2014/10/01
MATERIAL NO.	SEE NOTES
TITLE	6CCT ML-XT CV CONNECTOR
DOCUMENT NO.	SD-93443-004
SHEET NO.	5 OF 7
SIZE	A3

molex

THIS DRAWING CONTAINS INFORMATION THAT IS PROPRIETARY TO MOLEX INCORPORATED AND SHOULD NOT BE USED WITHOUT WRITTEN PERMISSION

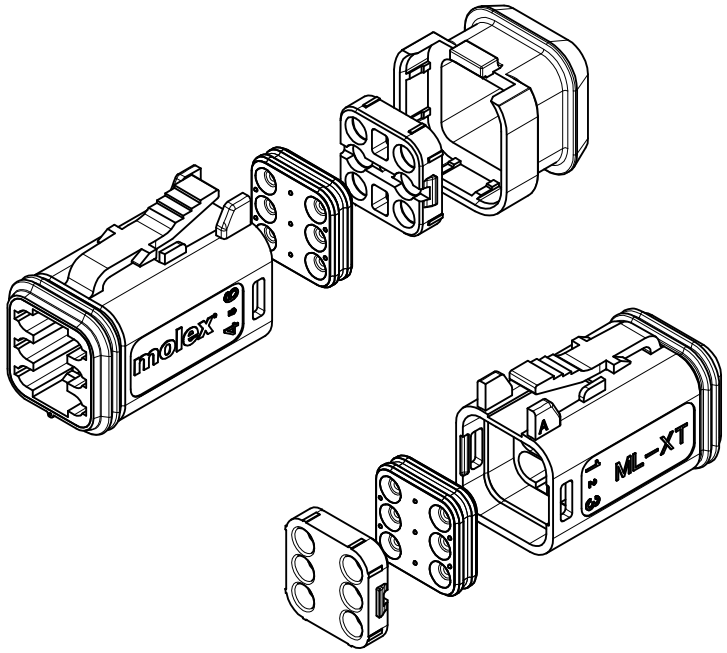

6CCT PLUG CONNECTOR

93445	4	_	_ _

SERIES NO.

CIRCUIT SIZE
4 = 6cct

ASSEMBLY OPTIONS
1 = PLUG ASSEMBLY FOR WIRE JACKET RANGE: Ø1.4mm-2.7mm (NOTE 2)
2 = PLUG ASSEMBLY FOR WIRE JACKET RANGE: Ø2.7mm-3.6mm (NOTE 2)
5 = PLUG ASSEMBLY & HEATSHR FOR WIRE JACKET RANGE: Ø1.4mm-2.7mm (NOTE 3)
6 = PLUG ASSEMBLY & HEATSHR FOR WIRE JACKET RANGE: Ø2.7mm-3.6mm (NOTE 3)

COLOUR
01=BLACK
02=GREY 06=WHITE
03=GREEN 07=BROWN
04=BLUE 08=ORANGE
05=YELLOW 09=RED

EXAMPLE:
6cct PLUG BLACK WITH LARGE SEAL AND HEATSHRINK = 93445-4601

NOTES
1. SEE SHEET 5 FOR UNSPECIFIED NOTES AND DIMENSIONS
2. BACK COVER HOUSING COLOUR: BLACK
3. HEATSHRINK HOUSING COLOUR: BLACK

SEE SHEET 1
EC NO: IPG2015-1746 2015/04/07
DRWN: JFLETCHER 2015/07/16
CH'KD:
APPR: JWALLACE
DESCRIPTION
REV
3

QUALITY SYMBOLS
▼=0
Ⓒ=0

GENERAL TOLERANCES (UNLESS SPECIFIED)	mm	INCH
4 PLACES	± ---	± ---
3 PLACES	± ---	± ---
2 PLACES	± 0.10	± ---
1 PLACE	± 0.20	± ---
0 PLACE	± ---	± ---
ANGULAR ± 2 °		

DRAFT WHERE APPLICABLE MUST REMAIN WITHIN DIMENSIONS

DIMENSION STYLE: MM ONLY
SCALE: 1.5:1
DESIGN UNITS: METRIC
THIRD ANGLE PROJECTION

DRAWN BY: JFLETCHER DATE: 2014/04/23
CHECKED BY: DATE:
APPROVED BY: JWALLACE DATE: 2014/10/01
MATERIAL NO.: SEE NOTES

TITLE: 6CCT ML-XT CV CONNECTOR

molex

DOCUMENT NO.: SD-93443-004
SHEET NO.: 6 OF 7
SIZE: A3

THIS DRAWING CONTAINS INFORMATION THAT IS PROPRIETARY TO MOLEX INCORPORATED AND SHOULD NOT BE USED WITHOUT WRITTEN PERMISSION

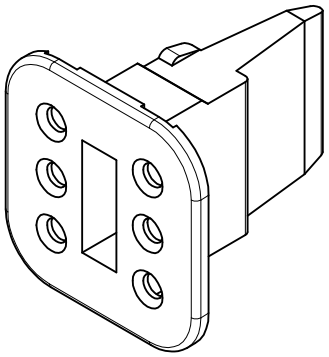

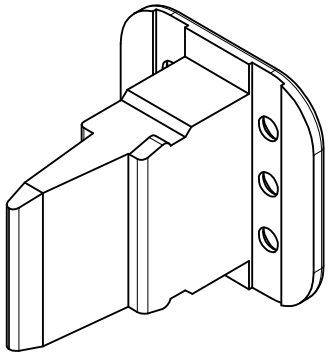

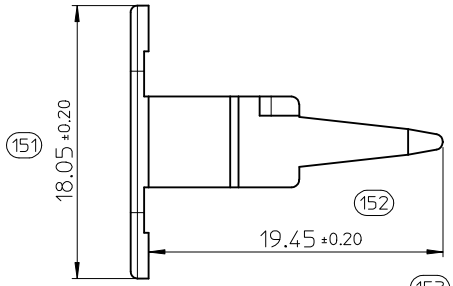

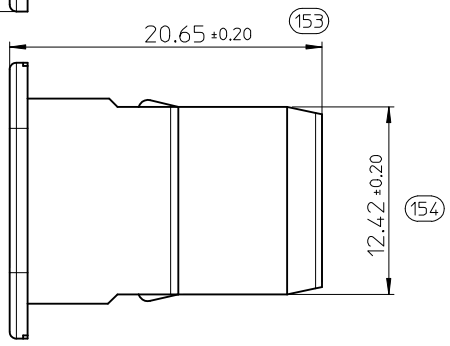

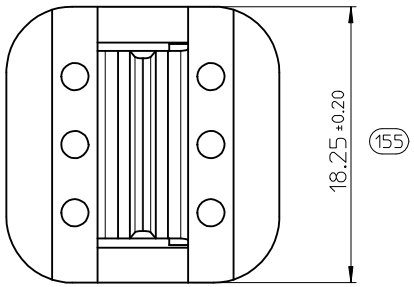

6CCT PLUG WEDGELOCK

93448	4	0	_ _

SERIES NO.

CIRCUIT SIZE
4 = 6cct

COLOUR/CODING
03=GREEN

NOTES
1. MATERIAL
HOUSING: NYLON 30% GF
2. INSPECTION NUMBERS 151-200 RESERVED FOR SHEET 7
LAST INSPECTION NUMBER 155

SEE SHEET 1
EC NO: IPG2015-1746 2015/04/07
DRWN: JFLETCHER
CH'KD:
APPR: JWALLACE 2015/07/16
DESCRIPTION
REV
3

QUALITY SYMBOLS
▼=0
Ⓒ=0

GENERAL TOLERANCES (UNLESS SPECIFIED)

	mm	INCH
4 PLACES	± ---	± ---
3 PLACES	± ---	± ---
2 PLACES	± 0.10	± ---
1 PLACE	± 0.20	± ---
0 PLACE	± ---	± ---

ANGULAR ± 2 °
DRAFT WHERE APPLICABLE MUST REMAIN WITHIN DIMENSIONS

DIMENSION STYLE: MM ONLY
SCALE: 3:1
DESIGN UNITS: METRIC
THIRD ANGLE PROJECTION

DRAWN BY: JFLETCHER DATE: 2014/04/23
CHECKED BY: DATE:
APPROVED BY: JWALLACE DATE: 2014/10/01
MATERIAL NO.: SEE NOTES

TITLE: 6CCT ML-XT CV CONNECTOR

molex

DOCUMENT NO.: SD-93443-004
SHEET NO.: 7 OF 7
SIZE: A3

THIS DRAWING CONTAINS INFORMATION THAT IS PROPRIETARY TO MOLEX INCORPORATED AND SHOULD NOT BE USED WITHOUT WRITTEN PERMISSION

Стандарт Электрон Связь

Мы молодая и активно развивающаяся компания в области поставок электронных компонентов. Мы поставляем электронные компоненты отечественного и импортного производства напрямую от производителей и с крупнейших складов мира.

Благодаря сотрудничеству с мировыми поставщиками мы осуществляем комплексные и плановые поставки широчайшего спектра электронных компонентов.

Собственная эффективная логистика и склад в обеспечивает надежную поставку продукции в точно указанные сроки по всей России.

Мы осуществляем техническую поддержку нашим клиентам и предпродажную проверку качества продукции. На все поставляемые продукты мы предоставляем гарантию .

Осуществляем поставки продукции под контролем ВП МО РФ на предприятия военно-промышленного комплекса России , а также работаем в рамках 275 ФЗ с открытием отдельных счетов в уполномоченном банке. Система менеджмента качества компании соответствует требованиям ГОСТ ISO 9001.

Минимальные сроки поставки, гибкие цены, неограниченный ассортимент и индивидуальный подход к клиентам являются основой для выстраивания долгосрочного и эффективного сотрудничества с предприятиями радиоэлектронной промышленности, предприятиями ВПК и научно-исследовательскими институтами России.

С нами вы становитесь еще успешнее!

Наши контакты:

Телефон: +7 812 627 14 35

Электронная почта: sales@st-electron.ru

Адрес: 198099, Санкт-Петербург,
Промышленная ул, дом № 19, литера Н,
помещение 100-Н Офис 331