Preliminary

SPECTRALINEAR

SL23EP08

Low Jitter and Skew 10 to 220 MHz Zero Delay Buffer (ZDB)

Key Features

- 10 to 220 MHz operating frequency range
- Low output clock skew: 70ps-typ
- Low output clock Jitter: 50 ps-typ
  - 50 ps-typ at 166MHz, CL=15pF and VDD=3.3V
  - 75 ps-typ at 166MHz, CL=15pF and VDD=2.5V
- Low part-to-part output skew: 150 ps-typ
- 3.3V to 2.5V power supply range
- Low power dissipation:
  - 22 mA-typ at 66MHz and VDD=3.3V
  - 20 mA-typ at 66MHz and VDD=2.5V
- One input drives 8 outputs
- Multiple configurations and drive options
- Select mode to bypass PLL or tri-state outputs
- SpreadThru™ PLL that allows use of SSCG
- Available in 16-pin SOIC and TSSOP packages
- Available in Commercial and Industrial grades

Applications

- Printers, MFPs and Digital Copiers
- PCs and Work Stations
- Routers, Switchers and Servers
- Datacom and Telecom
- High-Speed Digital Embeded Systems

Description

The SL23EP08 is a low skew, low jitter and low power Zero Delay Buffer (ZDB) designed to produce up to eight (8) clock outputs from one (1) reference input clock, for high speed clock distribution applications.

The product has an on-chip PLL and a feedback pin (FBK) which can be used to obtain feedback from any one of the output clocks. The SL23EP08 has two (2) clock driver banks each with four (4) clock outputs. These outputs are controlled by two (2) select input pins S1 and S2. When only four (4) outputs are needed, bank-B output clock buffers can be tri-stated to reduce power dissipation and jitter. The select inputs can also be used to tri-state both banks A and B or drive them directly from the input bypassing the PLL and making the product behave like a Non-Zero Delay Buffer (NZDB). The SL23EP08 offers various X/2,1X, 2X and 4x frequency options at the output clocks. Refer to the "Product Configuration Table" for the details.

The SL23EP08-1H, -2H and 5H versions operates up to 220 MHz and SL23EP08-1, -2, -3 and -4 versions operate up to 133 MHz with CL=15pF output load.

Benefits

- Up to eight (8) distribution of input clock
- Standard and High-Dirive levels to control impedance level, frequency range and EMI
- Low skew, jitter and power dissipation

Block Diagram

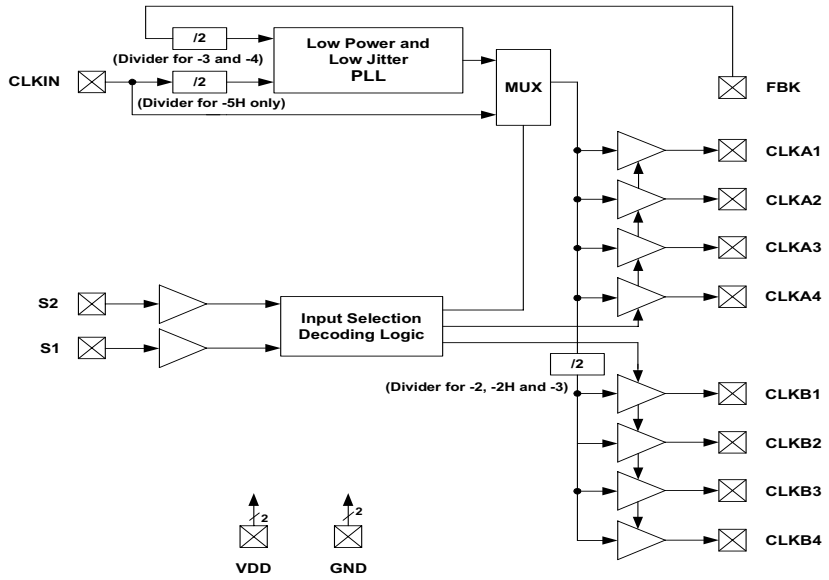

2200 Laurelwood Road, Santa Clara, CA 95054 Tel: (408) 855-0555 Fax: (408) 855-0550 www.SpectraLinear.com

Pin Configuration

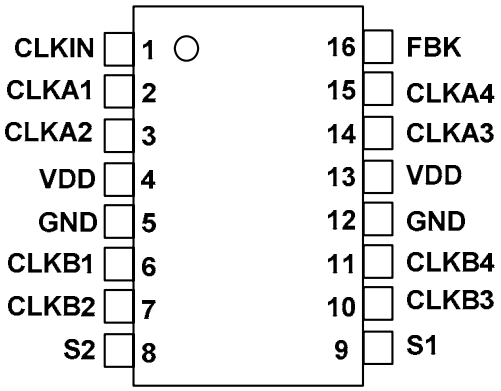

16-Pin SOIC/TSSOP

Pin Description

Pin Number	Pin Name	Pin Type	Pin Description
1	CLKIN	Input	Reference Frequency Clock Input. 5V tolerant input. Weak pull-down (250kΩ).
2	CLKA1	Output	Buffered Clock Output, Bank A. Weak pull-down (250kΩ).
3	CLKA2	Output	Buffered Clock Output, Bank A. Weak pull-down (250kΩ).
4	VDD	Power	3.3V to 2.5V Power Supply.
5	GND	Power	Power Ground.
6	CLKB1	Output	Buffered Clock Output, Bank B. Weak pull-down (250kΩ).
7	CLKB2	Output	Buffered Clock Output, Bank B. Weak pull-down (250kΩ).
8	S2	Input	Select Input, select pin S2. Weak pull-up (250kΩ).
9	S1	Input	Select Input, select pin S1. Weak pull-up (250kΩ).
10	CLKB3	Output	Buffered Clock Output, Bank B. Weak pull-down (250kΩ).
11	CLKB4	Output	Buffered Clock Output, Bank B. Weak pull-down (250kΩ).
12	GND	Power	Power Ground.
13	VDD	Power	3.3V to 2.5V Power Supply.
14	CLKA3	Output	Buffered Clock Output, Bank A. Weak pull-down (250kΩ).
15	CLKA4	Output	Buffered Clock Output, Bank A. Weak pull-down (250kΩ).
16	FBK	Output	PLL Feedback input.

General Description

The SL23EP08 is a low skew, low jitter Zero Delay Buffer with very low operating current.

The product includes an on-chip high performance PLL that locks into the input reference clock and produces eight (8) output clock drivers tracking the input reference clock for systems requiring clock distribution.

in addition to FBK pin used for internal PLL feedback, there are two (2) banks with four (4) outputs in each bank, bringing the number of total available output clocks to eight (8).

Input and output Frequency Range

The input and output frequency range is the same for SL23EP08-1 and -1H versions. For SL23EP08-2, -2H -3, -4 and -5H versions, the output frequency is 1/2x, 1x, 2x, or 4x of the CLKIN as given in the "Available SL23EP08 Configurations" Table 3. But, the frequency range depends on VDD and drive levels as given in the "Electrical Specifications" Tables.

If the input clock frequency is DC (from GND to VDD), this is detected by an input frequency detection circuitry and all eight (8) clock outputs are forced to Hi-Z. The PLL is shutdown to save power. In this shutdown state, the product draws less than 10 µA supply current.

SpreadThru™ Feature

If a Spread Spectrum Clock (SSC) were to be used as an input clock, the SL23EP08 is designed to pass the modulated Spread Spectrum Clock (SSC) signal from its reference input to the output clocks. The same spread characteristics at the input are passed through the PLL and drivers without any degradation in spread percent (%), spread profile and modulation frequency.

Select Input Control

The SL23EP08 provides two (2) input select control pins called S1 and S2. This feature enables users to selects various states of output clock banks-A and bank-B, output source and PLL shutdown features as shown in the Table 2.

The S1 (Pin-9) and S2 (Pin-8) inputs include 250 kΩ weak pull-down resistors to GND.

PLL Bypass Mode

If the S2=1 and S2=0 pins, the on-chip PLL is shutdown and bypassed, and all the eight (8) output clocks of bank A and bank B are driven directly from the reference input clock. In this operation mode SL23EP08 works like a non-ZDB product.

High and Low-Drive Product Options

The SL23EP08 is offered with high drive "-1H, -2H and -5H" and standard drive "-1, -2, -3 and -4" options. These drive options enable the users to control load levels, frequency range and EMI control. Refer to the AC electrical tables for the details.

SL23EP08-5H is offered only with high drive option. SL23EP08-3 and -4 are offered only with standard drive option.

Skew and Zero Delay

All outputs should drive the similar load to achieve output-to-output skew and input-to-output delay specifications given in the AC electrical tables. However, Zero delay between input and outputs can be adjusted by changing the loading of FBK pin relative to the banks A and B clocks since FBK is the feedback to the PLL.

Power Supply Range (VDD)

The SL23EP08 is designed to operate with from 3.3V to 2.5V VDD power supply range. An internal on-chip voltage regulator is used to provide PLL constant power supply of 1.8V, leading to a consistent and stable PLL electrical performance in terms of skew, jitter and power dissipation. The SL2308 I/O is powered by using VDD.

Contact SLI for 1.8V power supply version ZDB called SL23EPL08.

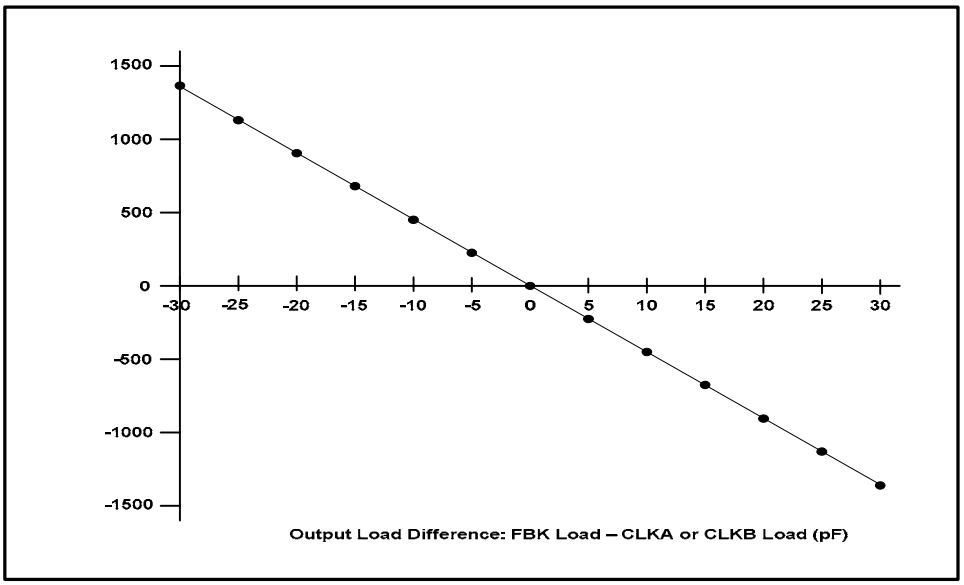

Figure 1. CLKIN Input to CLKA and CLKB Delay

S2	S1	Clock A1-A4	Clock B1-B4	Output Source	PLL Shutdown and Bypass
0	0	Tri-state	Tri-state	PLL	Yes
0	1	Driven	Tri-state	PLL	No
1	0	Driven	Driven	Reference(CLKIN)	Yes
1	1	Driven	Driven	PLL	No

Table 2. Select Input Decoding

Device	Feedback From	Bank-A Frequency	Bank-B Frequency
SL23EP08-1 and 1H	Bank-A or Bank-B	Reference	Reference
SL23EP08-2 and -2H[1]	Bank-A	Reference	Reference/2
SL23EP08-2 and -2H[1]	Bank-B	2x Reference	Reference
SL23EP08-3[1]	Bank-A	2xReference	Reference[2]
SL23EP08-3[1]	Bank-B	4xReference	2xReference
SL23EP08-4	Bank-A or Bank-B	2x Reference	2x Reference
SL23EP08-5H	Bank-A or Bank-B	Reference/2	Reference/2

Table 3. Available SL23EP08 Configurations

Notes:

1. Outputs are inverted on SL23EP08-2, -2H and -3 in PLL bypass mode when S2=1 and S1=0. Use SL23EP08-1 if non-inverting outputs are required.
2. Output phase is random (0° or 180° with respect to input clock). Use SL23EP08-2 if phase integrity is required.

Absolute Maximum Ratings

Description	Condition	Min	Max	Unit
Supply voltage, VDD		-0.5	4.6	V
All Inputs and Outputs		-0.5	VDD+0.5	V
Ambient Operating Temperature	In operation, C-Grade	0	70	°C
Ambient Operating Temperature	In operation, I-Grade	-40	85	°C
Storage Temperature	No power is applied	-65	150	°C
Junction Temperature	In operation, power is applied	-	125	°C
Soldering Temperature		-	260	°C
ESD Rating (Human Body Model)	MIL-STD-883, Method 3015	2000	-	V

Operating Conditions (C-Grade)

Unless otherwise stated VDD= 3.3V+/- 10%, CL=15pF and Ambient Temperature range 0 to +70°C

Description	Symbol	Condition	Min	Typ	Max	Unit
Operating Voltage	VDD	VDD+/-10%	2.97	3.3	3.63	V
Operating Temperature	TA	Ambient Temperature	0	-	70	°C
Input Capacitance	VIH	Pins 1, 8, 9 and 16	-	5	7	pF

DC Electrical Characteristics (C-Grade)

Unless otherwise stated VDD= 3.3V+/- 10%, CL=15pF and Ambient Temperature range 0 to +70°C

Description	Symbol	Condition	Min	Typ	Max	Unit
Input LOW Voltage	VINL	CLKIN, S2 and S1 pins	–	–	0.8	V
Input HIGH Voltage	VINH	CLKIN, S2 and S1 pins	2.0	–	VDD+0.3	V
Input LOW Current	IINL	0 < VIN < 0.8V CLKIN, S2 and S1 inputs	–	25	50	µA
Input HIGH Current	IINH	VIN = 2.4 to VDD CLKIN, S2 and S1 inputs	–	–	50	µA
Output LOW Voltage	VOL	IOL = 8 mA (standard drive)	–	–	0.4	V
		IOL = 12 mA (high drive)	–	–	0.4	V
Output HIGH Voltage	VOH	IOH = –8 mA (standard drive)	2.4	–	–	V
		IOH = –12 mA (high drive)	2.4	–	–	V
Power Down Supply Current	IIDDPD	Measured at CLKIN= GND to VDD or input is floating	–	8	12	µA
Power Supply Current	IDD1	All Outputs CL=0, 33.3 MHz CLKIN S2=S1=1 (high), all versions	–	16	20	mA
Power Supply Current	IDD2	All Outputs CL=0, 66.6 MHz CLKIN S2=S1=1 (high), all versions	–	22	28	mA
Power Supply Current	IDD3	All Outputs CL=0, 100 MHz CLKIN S2=S1=1 (high), all versions	–	28	36	mA
Power Supply Current	IDD4	All Outputs CL=0, 133.3 MHz CLKIN S2=S1=1 (high), all versions	–	34	44	mA
Pull-up and Pull-down Resistors	RPUD	Pins-1/2/3/7/8/9/10/11/14/15 250kΩ-typ	175	250	325	kΩ

Switching Electrical Characteristics (C-Grade)

Unless otherwise stated VDD= 3.3V+/- 10%, CL=15pF and Ambient Temperature range 0 to +70°C

Description	Symbol	Condition	Min	Typ	Max	Unit
Output Frequency Range	FOUT1	CL=15pf, -1H and -2H	10	-	220	MHz
	FOUT2	CL=22pf, -1H and -2H	10	-	200	MHz
	FOUT3	CL=30pf, -1H and -2H	10	-	135	MHz
	FOUT4	CL=15pf, -1, -2 and -4	10	-	200	MHz
	FOUT5	CL=22pf, -1, -2 and -4	10	-	135	MHz
	FOUT6	CL=30pf, -1, -2 and -4	10	-	100	MHz
Input Duty Cycle	DC1	Measured at VDD/2, all versions	30	50	70	%
Output Duty Cycle	DC2	CL=30pF, Fout=66 MHz, all versions Measured at VDD/2	40	50	60	%

Switching Electrical Characteristics (C-Grade-Cont.)

Unless otherwise stated VDD= 3.3V+/- 10%, CL=15pF and Ambient Temperature range 0 to +70°C

Output Duty Cycle	DC3	CL=15pF, Fout=66 MHz, all versions Measured at VDD/2	45	50	55	%
Output Duty Cycle	DC4	CL=15pF, Fout=133 MHz, all versions Measured at VDD/2	40	50	60	%
Output Duty Cycle	DC5	CL=15pF, Fout=166 MHz, all versions Measured at VDD/2	45	50	55	%
Output Rise/Fall Time	tr/f1	CL=30pF, -1, -2 and -4 versions	-	-	2.2	ns
Output Rise/Fall Time	tr/f2	CL=15pF, -1, -2 and -4 versions	-	-	1.5	ns
Output Rise/Fall Time	tr/f3	CL=30pF, -1H and -2H and versions	-	-	1.5	ns
Output Rise/Fall Time	tr/f4	CL=15pF, -1H and -2H and versions	-	-	1.2	ns
Output-to-Output Skew on Same Bank	SKW2	-1 and -2, measured from 0.8V to 2.0V, and outputs are equally loaded	-	80	150	ps
Output-to-Output Skew on Same Bank	SKW2	-1H and -2H and -4, measured at VDD/2 and outputs are equally loaded	-	70	150	ps
Output-to-Output Skew Between Bank A and B	SKW3	-1, -1H, 2H and -4, measured at VDD/2 and outputs are equally loaded	-	80	150	ps
Output-to-Output Skew Between Bank A and B	SKW4	-2, measured at VDD/2 and outputs are equally loaded	-	130	300	ps
Device-to-Device Skew	SKW5	All versions, measured at VDD/2 and outputs are equally loaded	-	150	400	ps
Input-to-Output Delay	Dt	All versions, CLKIN to FBK rising edge, measured at VDD/2 and outputs are equally loaded and S2=S1=1	-200	-	200	ps
Cycle-to-Cycle Jitter (-1 and -2 Versions)	CCJ1	Fout=66 MHz and CL=15pF	-	75	150	ps
		Fout=66MHz and CL=30PF	-	100	200	ps
		Fout=166MHz and CL=15pF	-	50	100	ps
Cycle-to-Cycle Jitter (-1H, -2H and -4 Versions)	CCJ2	Fout=66 MHz and CL=15pF	-	100	200	ps
		Fout=133MHz and CL=30PF	-	150	300	ps
		Fout=166MHz and CL=15pF	-	75	150	ps
PLL Lock Time	tLOCK	From 0.95VDD and valid clock presented at CLKIN	-	-	1.0	ms

Operating Conditions (I-Grade)

Unless otherwise stated VDD= 3.3V+/- 10%, CL=15pF and Ambient Temperature range -40 to +85°C

Description	Symbol	Condition	Min	Typ	Max	Unit
Operating Voltage	VDD	VDD+/-10%	2.97	3.3	3.63	V
Operating Temperature	TA	Ambient Temperature	-40	-	85	°C
Input Capacitance	VIH	Pins 1, 8, 9 and 16	-	5	8	pF

DC Electrical Characteristics (I-Grade)

Unless otherwise stated VDD= 3.3V+/- 10%, CL=15pF and Ambient Temperature range -40 to +85°

Description	Symbol	Condition	Min	Typ	Max	Unit
Input LOW Voltage	VINL	CLKIN, S2 and S1 pins	–	–	0.8	V
Input HIGH Voltage	VINH	CLKIN, S2 and S1 pins	2.0	–	VDD+0.3	V
Input LOW Current	IINL	0 < VIN < 0.8V CLKIN, S2 and S1 inputs	–	25	50	µA
Input HIGH Current	IINH	VIN = 2.4 to VDD CLKIN, S2 and S1 inputs	–	–	50	µA
Output LOW Voltage	VOL	IOL = 8 mA (standard drive)	–	–	0.4	V
		IOL = 12 mA (high drive)	–	–	0.4	V
Output HIGH Voltage	VOH	IOH = –8 mA (standard drive)	2.4	–	–	V
		IOH = –12 mA (high drive)	2.4	–	–	V
Power Down Supply Current	IIDDPD	Measured at CLKIN= GND to VDD or input is floating	–	12	18	µA
Power Supply Current	IDD1	All Outputs CL=0, 33.3 MHz CLKIN S2=S1=1 (high), all versions	–	17	22	mA
Power Supply Current	IDD2	All Outputs CL=0, 66.6 MHz CLKIN S2=S1=1 (high), all versions	–	24	32	mA
Power Supply Current	IDD3	All Outputs CL=0, 100 MHz CLKIN S2=S1=1 (high), all versions	–	30	40	mA
Power Supply Current	IDD4	All Outputs CL=0, 133.3 MHz CLKIN S2=S1=1 (high), all versions	–	38	50	mA
Pull-up and Pull-down Resistors	RPUD	Pins-1/2/3/7/8/9/10/11/14/15 250kΩ-typ	125	250	375	kΩ

Switching Electrical Characteristics (C-Grade)

Unless otherwise stated VDD= 2.5+/- 10%, CL=15pF and Ambient Temperature range 0 to +70°C

Description	Symbol	Condition	Min	Typ	Max	Unit
Output Frequency Range	FOUT1	CL=15pf, -1H and -2H versions	10	-	220	MHz
	FOUT2	CL=22pf, -1H and -2H versions	10	-	200	MHz
	FOUT3	CL=30pf, -1H and -2H versions	10	-	135	MHz
	FOUT4	CL=15pf, -1, -2 and -4 versions	10	-	200	MHz
	FOUT5	CL=22pf, -1, -2 and -4 versions	10	-	135	MHz
	FOUT6	CL=30pf, -1, -2 and -4 versions	10	-	100	MHz
Input Duty Cycle	DC1	Measured at VDD/2, all versions	30	50	70	%
Output Duty Cycle	DC2	CL=30pF, Fout=66 MHz, all versions	40	50	60	%
Output Duty Cycle	DC3	CL=15pF, Fout=66 MHz, all versions Measured at VDD/2	45	50	55	%
Output Duty Cycle	DC4	CL=15pF, Fout=133 MHz, all versions Measured at VDD/2	40	50	60	%
Output Duty Cycle	DC5	CL=15pF, Fout=166 MHz, all versions Measured at VDD/2	45	50	55	%
Output Rise/Fall Time	tr/f1	CL=30pF, -1, -2 and -4 versions	-	-	2.2	ns
Output Rise/Fall Time	tr/f2	CL=15pF, -1, -2 and -4 versions	-	-	1.5	ns
Output Rise/Fall Time	tr/f3	CL=30pF, -1H and -2H and versions	-	-	1.5	ns
Output Rise/Fall Time	tr/f4	CL=15pF, -1H and -2H and versions	-	-	1.2	ns
Output-to-Output Skew on Same Bank	SKW2	-1 and -2, measured from 0.8V to 2.0V, and outputs are equally loaded	-	80	150	ps
Output-to-Output Skew on Same Bank	SKW2	-1H and -2H and -4, measured at VDD/2 and outputs are equally loaded	-	70	150	ps
Output-to-Output Skew Between Bank A and B	SKW3	-1, -1H, 2H and -4, measured at VDD/2 and outputs are equally loaded	-	80	150	ps
Output-to-Output Skew Between Bank A and B	SKW4	-2, measured at VDD/2 and outputs are equally loaded	-	130	300	ps
Device-to-Device Skew	SKW5	All versions, measured at VDD/2 and outputs are equally loaded	-	250	500	ps
Input-to-Output Delay	Dt	All versions, CLKIN to FBK rising edge, measured at VDD/2 and outputs are equally loaded and S2=S1=1	-200	-	200	ps
Cycle-to-Cycle Jitter (-1 and -2 Versions)	CCJ1	Fout=66 MHz and CL=15pF	-	85	150	ps
		Fout=66MHz and CL=30PF	-	110	225	ps
		Fout=166MHz and CL=15pF	-	65	115	ps
Cycle-to-Cycle Jitter	CCJ2	Fout=66 MHz and CL=15pF	-	110	225	ps

(-1H, -2H and -4 Versions)		Fout=133MHz and CL=30PF	-	175	350	ps
		Fout=166MHz and CL=15pF	-	100	175	ps
PLL Lock Time	tLOCK	From 0.95VDD and valid CLKIN	-	-	1.0	ms

Operating Conditions (C-Grade)

Unless otherwise stated VDD= 2.5V+/- 10%, CL=15pF and Ambient Temperature range 0 to +70°C

Description	Symbol	Condition	Min	Typ	Max	Unit
Operating Voltage	VDD	VDD+/-10%	2.25	2.5	2.75	V
Operating Temperature	TA	Ambient Temperature	0	-	70	°C
Input Capacitance	VIH	Pins 1, 8, 9 and 16	-	5	7	pF

DC Electrical Characteristics (C-Grade)

Unless otherwise stated VDD= 2.5V+/- 10%, CL=15pF and Ambient Temperature range 0 to +70°C

Description	Symbol	Condition	Min	Typ	Max	Unit
Input LOW Voltage	VINL	CLKIN, S2 and S1 pins	–	–	0.7	V
Input HIGH Voltage	VINH	CLKIN, S2 and S1 pins	1.7	–	VDD+0.3	V
Input LOW Current	IINL	0 < VIN < 0.7V CLKIN, S2 and S1 inputs	–	25	50	µA
Input HIGH Current	IINH	VIN = 1.7 to VDD CLKIN, S2 and S1 inputs	–	–	50	µA
Output LOW Voltage	VOL	IOL = 6 mA (standard drive)	–	–	0.3	V
		IOL = 8 mA (high drive)	–	–	0.3	V
Output HIGH Voltage	VOH	IOH = – 6 mA (standard drive)	2.0	–	–	V
		IOH = – 8 mA (high drive)	2.0	–	–	V
Power Down Supply Current	IIDDPD	Measured at CLKIN= GND to VDD or input is floating	–	8	12	µA
Power Supply Current	IDD1	All Outputs CL=0, 33.3 MHz CLKIN S2=S1=1 (high), all versions	–	15	18	mA
Power Supply Current	IDD2	All Outputs CL=0, 66.6 MHz CLKIN S2=S1=1 (high), all versions	–	20	25	mA
Power Supply Current	IDD3	All Outputs CL=0, 100 MHz CLKIN S2=S1=1 (high), all versions	–	26	33	mA
Power Supply Current	IDD4	All Outputs CL=0, 133.3 MHz CLKIN S2=S1=1 (high), all versions	–	32	40	mA
Pull-up and Pull-down Resistors	RPUD	Pins-1/2/3/7/8/9/10/11/14/15 250kΩ-typ	125	250	375	kΩ

Switching Electrical Characteristics (C-Grade)

Unless otherwise stated VDD= 2.5+/- 10%, CL=15pF and Ambient Temperature range 0 to +70°C

Description	Symbol	Condition	Min	Typ	Max	Unit
Output Frequency Range	FOUT1	CL=15pf, -1H and -2H	10	-	170	MHz
	FOUT2	CL=22pf, -1H and -2H	10	-	135	MHz
	FOUT1	CL=30pf, -1H and -2H	10	-	100	MHz
	FOUT4	CL=15pf, -1, -2 and -4	10	-	135	MHz
	FOUT5	CL=22pf, -1, -2 and -4	10	-	100	MHz
	FOUT1	CL=30pf, -1, -2 and -4	10	-	75	MHz
Input Duty Cycle	DC1	Measured at VDD/2, all versions	30	50	70	%

Switching Electrical Characteristics (C-Grade-Cont.)

Unless otherwise stated VDD= 2.5V+/- 10%, CL=15pF and Ambient Temperature range 0 to +70°C

Output Duty Cycle	DC2	CL=15pF, Fout=66 MHz, all versions Measured at VDD/2	45	50	55	%
Output Duty Cycle	DC3	CL=15pF, Fout=133 MHz, all versions Measured at VDD/2	45	50	55	%
Output Duty Cycle	DC4	CL=15pF, Fout=166 MHz, all versions Measured at VDD/2	40	50	60	%
Output Rise/Fall Time	tr/f1	CL=30pF, -1, -2 and -4 versions Measured at 0.6 to 1.8V	-	-	2.0	ns
Output Rise/Fall Time	tr/f2	CL=15pF, -1, -2 and -4 versions Measured at 0.6 to 1.8V	-	-	1.6	ns
Output Rise/Fall Time	tr/f3	CL=30pF, -1H and -2H and versions Measured at 0.6 to 1.8V	-	-	1.4	ns
Output Rise/Fall Time	tr/f4	CL=15pF, -1H and -2H and versions Measured at 0.6 to 1.8V	-	-	1.1	ns
Output-to-Output Skew on Same Bank	SKW2	-1 and -2, measured from 0.8V to 2.0V, and outputs are equally loaded	-	80	200	ps
Output-to-Output Skew on Same Bank	SKW2	-1H and -2H and -4, measured at VDD/2 and outputs are equally loaded	-	70	200	ps
Output-to-Output Skew Between Bank A and B	SKW3	-1, -1H, 2H and -4, measured at VDD/2 and outputs are equally loaded	-	80	200	ps
Output-to-Output Skew Between Bank A and B	SKW4	-2, measured at VDD/2 and outputs are equally loaded	-	130	350	ps
Device-to-Device Skew	SKW5	All versions, measured at VDD/2 and outputs are equally loaded	-	150	500	ps
Input-to-Output Delay	Dt	All versions, CLKIN to FBK rising edge, measured at VDD/2 and outputs are equally loaded and S2=S1=1	-250	-	250	ps

Cycle-to-Cycle Jitter (-1, -2 and -4 Versions)	CCJ1	Fout=66 MHz and CL=15pF	-	75	150	ps
		Fout=133MHz and CL=15pF	-	50	100	ps
Cycle-to-Cycle Jitter (-1H and -2H Versions)	CCJ2	Fout=66MHz and CL=15pF	-	100	200	ps
		Fout=166MHz and CL=15pF	-	75	150	ps
PLL Lock Time	tLOCK	From 0.95VDD and valid clock presented at CLKIN	-	-	1.0	ms

Operating Conditions (I-Grade)

Unless otherwise stated VDD= 2.5V+/- 10%, CL=15pF and Ambient Temperature range -40 to +85°C

Description	Symbol	Condition	Min	Typ	Max	Unit
Operating Voltage	VDD	VDD+/-10%	2.25	2.5	2.75	V
Operating Temperature	TA	Ambient Temperature	-40	-	85	°C
Input Capacitance	VIH	Pins 1, 8, 9 and 16	-	5	8	pF

DC Electrical Characteristics (I-Grade)

Unless otherwise stated VDD= 2.5V+/- 10%, CL=15pF and Ambient Temperature range -40 to +85°

Description	Symbol	Condition	Min	Typ	Max	Unit
Input LOW Voltage	VINL	CLKIN, S2 and S1 pins	–	–	0.7	V
Input HIGH Voltage	VINH	CLKIN, S2 and S1 pins	1.7	–	VDD+0.3	V
Input LOW Current	IINL	0 < VIN < 0.7V CLKIN, S2 and S1 inputs	–	25	50	µA
Input HIGH Current	IINH	VIN = 1.7V to VDD CLKIN, S2 and S1 inputs	–	–	50	µA
Output LOW Voltage	VOL	IOL = 6 mA (standard drive)	–	–	0.3	V
		IOL = 8 mA (high drive)	–	–	0.3	V
Output HIGH Voltage	VOH	IOH = –6 mA (standard drive)	2.0	–	–	V
		IOH = –8 mA (high drive)	2.0	–	–	V
Power Down Supply Current	IIDDPD	Measured at CLKIN= GND to VDD or input is floating	–	8	12	µA
Power Supply Current	IDD1	All Outputs CL=0, 33.3 MHz CLKIN S2=S1=1 (high), all versions	–	16	20	mA
Power Supply Current	IDD2	All Outputs CL=0, 66.6 MHz CLKIN S2=S1=1 (high), all versions	–	21	28	mA
Power Supply Current	IDD3	All Outputs CL=0, 100 MHz CLKIN S2=S1=1 (high), all versions	–	27	36	mA
Power Supply Current	IDD4	All Outputs CL=0, 133.3 MHz CLKIN S2=S1=1 (high), all versions	–	34	44	mA
Pull-up and Pull-down Resistors	RPUD	Pins-1/2/3/7/8/9/10/11/14/15 250kΩ-typ	125	250	375	kΩ

Switching Electrical Characteristics (I-Grade)

Unless otherwise stated VDD= 2.5V+/- 10%, CL=15pF and Ambient Temperature range -40 to +85°C

Description	Symbol	Condition	Min	Typ	Max	Unit
Output Frequency Range	FOUT1	CL=15pf, -1H and -2H versions	10	-	175	MHz
	FOUT2	CL=22pf, -1H and -2H versions	10	-	135	MHz
	FOU3	CL=30pF, -1H and -2H versions	10	-	100	MHz
	FOUT4	CL=15pf, -1, -2 and -4 versions	10	-	135	MHz
	FOUT5	CL=22pf, -1, -2 and -4 versions	10	-	100	MHz
	FOUT6	CL=30pf, -1, -2 and -4 versions	10	-	75	MHz
Input Duty Cycle	DC1	Measured at VDD/2, all versions	30	50	70	%
Output Duty Cycle	DC2	CL=30pF, Fout=66 MHz, all versions Measured at VDD/2	40	50	60	%

Switching Electrical Characteristics (I-Grade-Cont.)

Unless otherwise stated VDD= 2.5V+/- 10%, CL=15pF and Ambient Temperature range -40 to +85°C

Output Duty Cycle	DC3	CL=15pF, Fout=66 MHz, all versions Measured at VDD/2	45	50	55	%
Output Duty Cycle	DC4	CL=15pF, Fout=133 MHz, all versions Measured at VDD/2	45	50	55	%
Output Duty Cycle	DC5	CL=15pF, Fout=166 MHz, all versions Measured at VDD/2	40	50	60	%
Output Rise/Fall Time	tr/f1	CL=30pF, -1, -2 and -4 versions Measured at 0.6 to 1.8V	-	-	2.2	ns
Output Rise/Fall Time	tr/f2	CL=15pF, -1, -2 and -4 versions Measured at 0.6 to 1.8V	-	-	1.8	ns
Output Rise/Fall Time	tr/f3	CL=30pF, -1H and -2H and versions Measured at 0.6 to 1.8V	-	-	1.5	ns
Output Rise/Fall Time	tr/f4	CL=15pF, -1H and -2H and versions Measured at 0.6 to 1.8V	-	-	1.2	ns
Output-to-Output Skew on Same Bank	SKW2	-1 and -2, measured from 0.8V to 2.0V, and outputs are equally loaded	-	100	220	ps
Output-to-Output Skew on Same Bank	SKW2	-1H and -2H and -4, measured at VDD/2 and outputs are equally loaded	-	100	220	ps
Output-to-Output Skew Between Bank A and B	SKW3	-1, -1H, 2H and -4, measured at VDD/2 and outputs are equally loaded	-	100	220	ps
Output-to-Output Skew Between Bank A and B	SKW4	-2, measured at VDD/2 and outputs are equally loaded	-	180	375	ps
Device-to-Device Skew	SKW5	All versions, measured at VDD/2 and outputs are equally loaded	-	275	550	ps
Input-to-Output Delay	Dt	All versions, CLKIN to FBK rising edge, measured at VDD/2 and outputs are equally loaded and S2=S1=1	-200	-	200	ps
Cycle-to-Cycle Jitter (-1, -2 and -4 Versions)	CCJ1	Fout=66 MHz and CL=15pF	-	80	175	ps
		Fout=133MHz and CL=15pF	-	70	150	ps
Cycle-to-Cycle Jitter (-1H and -2H Versions)	CCJ2	Fout=66 MHz and CL=15pF	-	70	150	ps
		Fout=166MHz and CL=15pF	-	60	125	ps
PLL Lock Time	tLOCK	From 0.95VDD and valid CLKIN	-	-	1.0	ms

External Components & Design Considerations

Typical Application Schematic

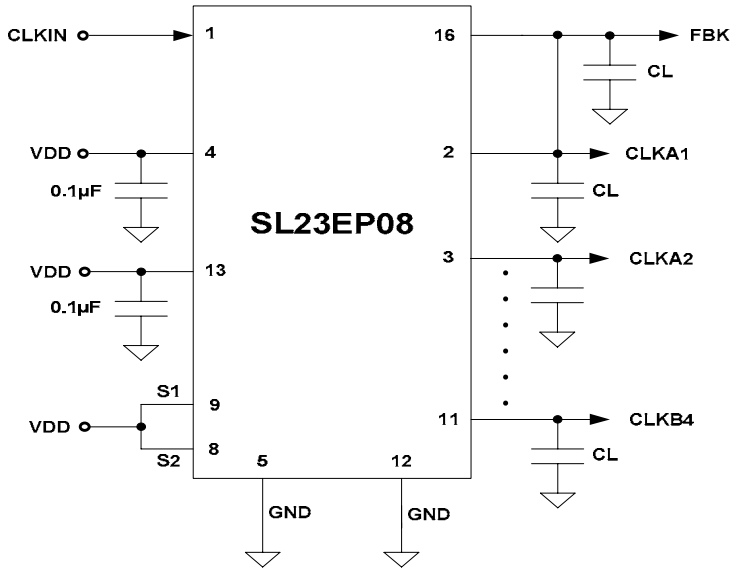

Comments and Recommendations

Decoupling Capacitor: A decoupling capacitor of 0.1µF must be used between VDD and VSS pins. Place the capacitor on the component side of the PCB as close to the VDD pin as possible. The PCB trace to the VDD pin and to the GND via should be kept as short as possible. Do not use vias between the decoupling capacitor and the VDD pin.

Series Termination Resistor: A series termination resistor is recommended if the distance between the output clocks and the load is over 1 ½ inch. The nominal impedance of the clock outputs is given on the page 5. Place the series termination resistors as close to the clock outputs as possible.

Zero Delay and Skew Control: All outputs and CLKIN pins should be loaded with the same load to achieve “Zero Delay” between the CLKIN and the outputs. The CLKOUT pin is connected to CLKIN internally on-chip for feedback to PLL. For applications requiring zero input/output delay, the load at the all output pins including the CLKOUT pin must be the same. If any delay adjustment is required, the capacitance at the CLKOUT pin could be increased or decreased to increase or decrease the delay between Bank A and B clocks and CLKIN. For minimum pin-to-pin skew, the external load at all the Bank A and B clocks must be the same.

Package Outline and Package Dimensions

16-Lead TSSOP (4.4mm)

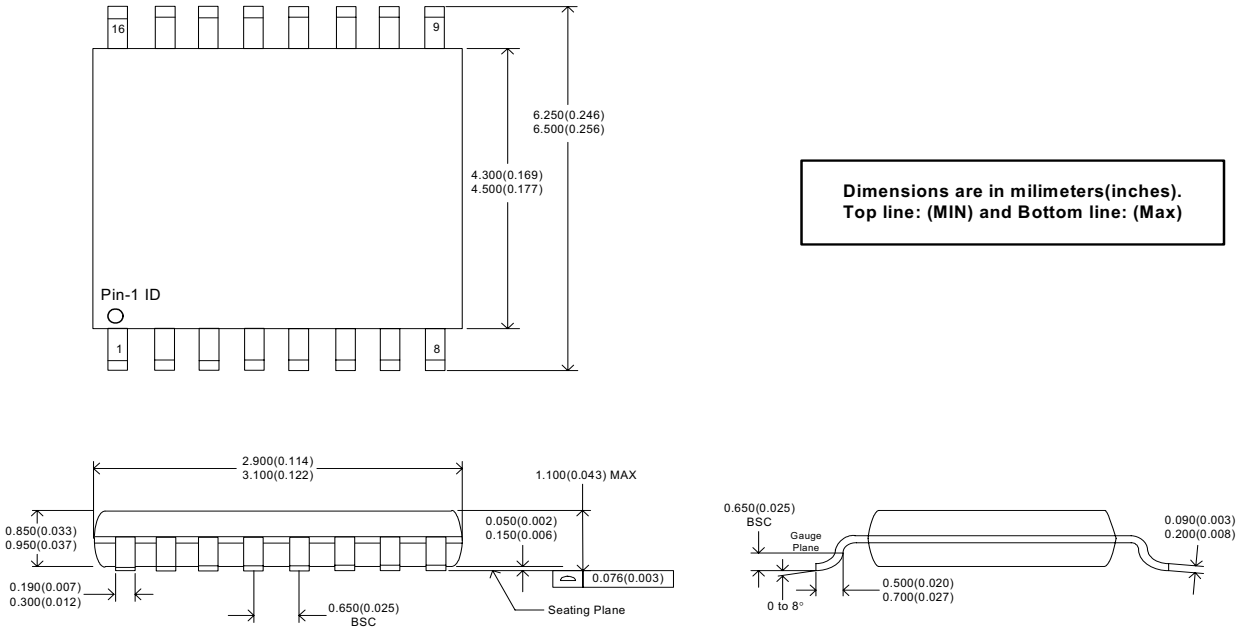

Thermal Characteristics

Parameter	Symbol	Condition	Min	Typ	Max	Unit
Thermal Resistance Junction to Ambient	θ JA	Still air	-	80	-	°C/W
	θ JA	1m/s air flow	-	70	-	°C/W
	θ JA	3m/s air flow	-	68	-	°C/W
Thermal Resistance Junction to Case	θ JC	Independent of air flow	-	36	-	°C/W

Package Drawing and Dimensions (Cont.)

16-Lead SOIC (150 Mil)

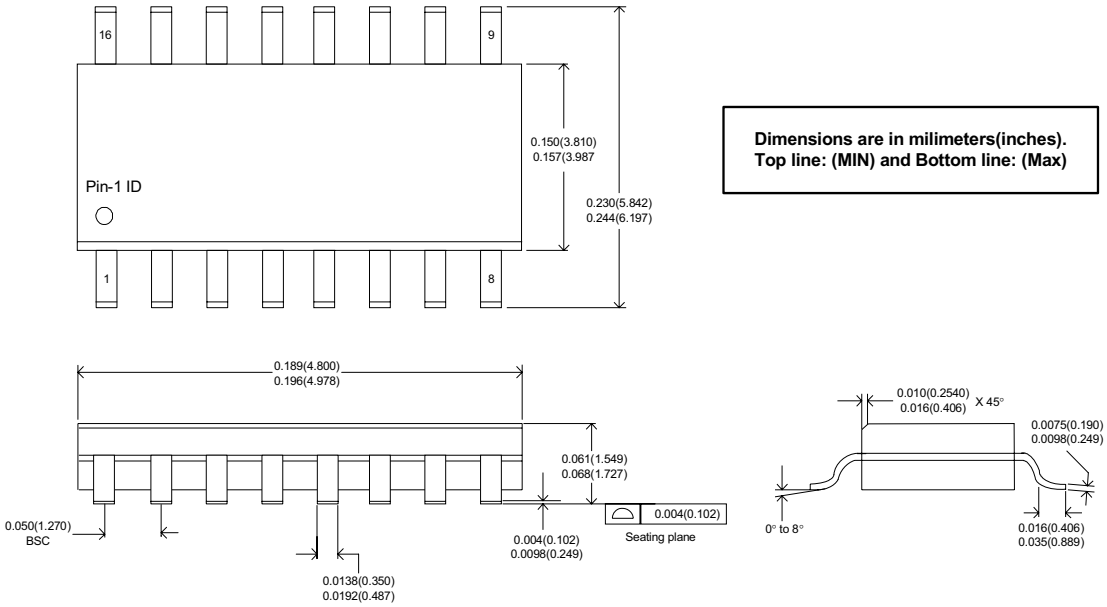

Thermal Characteristics

Parameter	Symbol	Condition	Min	Typ	Max	Unit
Thermal Resistance Junction to Ambient	θ JA	Still air	-	120	-	°C/W
	θ JA	1m/s air flow	-	115	-	°C/W
	θ JA	3m/s air flow	-	105	-	°C/W
Thermal Resistance Junction to Case	θ JC	Independent of air flow	-	60	-	°C/W

Ordering Information [3]

Ordering Number	Marking	Shipping Package	Package	Temperature
SL23EP08SC-1	SL23EP08SC-1	Tube	16-pin SOIC	0 to 70°C
SL23EP08SC-1T	SL23EP08SC-1	Tape and Reel	16-pin SOIC	0 to 70°C
SL23EP08SI-1	SL23EP08SI-1	Tube	16-pin SOIC	-40 to 85°C
SL23EP08SI-1T	SL23EP08SI-1	Tape and Reel	16-pin SOIC	-40 to 85°C
SL23EP08SC-1H	SL23EP08SC-1H	Tube	16-pin SOIC	0 to 70°C
SL23EP08SC-1HT	SL23EP08SC-1H	Tape and Reel	16-pin SOIC	0 to 70°C
SL23EP08SI-1H	SL23EP08SI-1H	Tube	16-pin SOIC	-40 to 85°C
SL23EP08SI-1HT	SL23EP08SI-1H	Tape and Reel	16-pin SOIC	-40 to 85°C
SL23EP08ZC-1H	SL23EP08ZC-1H	Tube	16-pin TSSOP	0 to 70°C
SL23EP08ZC-1HT	SL23EP08ZC-1H	Tape and Reel	16-pin TSSOP	0 to 70°C
SL23EP08ZI-1H	SL23EP08ZI-1H	Tube	16-pin TSSOP	-40 to 85°C
SL23EP08ZI-1HT	SL23EP08ZI-1H	Tape and Reel	16-pin TSSOP	-40 to 85°C
SL23EP08SC-2	SL23EP08SC-2	Tube	16-pin SOIC	0 to 70°C
SL23EP08SC-2T	SL23EP08SC-2	Tape and Reel	16-pin SOIC	0 to 70°C
SL23EP08SI-2	SL23EP08SI-2	Tube	16-pin SOIC	-40 to 85°C
SL23EP08SI-2T	SL23EP08SI-2	Tape and Reel	16-pin SOIC	-40 to 85°C
SL23EP08SC-2H	SL23EP08SC-2H	Tube	16-pin SOIC	0 to 70°C
SL23EP08SC-2HT	SL23EP08SC-2H	Tape and Reel	16-pin SOIC	0 to 70°C
SL23EP08SC-4	SL23EP08SC-4	Tube	16-pin SOIC	0 to 70°C
SL23EP08SC-4T	SL23EP08SC-4	Tape and Reel	16-pin SOIC	0 to 70°C
SL23EP08SI-4	SL23EP08SI-4	Tube	16-pin SOIC	-40 to 85°C
SL23EP08SI-4T	SL23EP08SI-4	Tape and Reel	16-pin SOIC	-40 to 85°C
SL23EP08SC-5H	SL23EP08SC-5H	Tube	16-pin SOIC	0 to 70°C
SL23EP08SC-5HT	SL23EP08SC-5H	Tube	16-pin SOIC	0 to 70°C

Notes:

3. The SL23EP08 products are RoHS compliant.

While SLI has reviewed all information herein for accuracy and reliability, Spectra Linear Inc. assumes no responsibility for the use of any circuitry or for the infringement of any patents or other rights of third parties which would result from each use. This product is intended for use in normal commercial applications and is not warranted not is it intended for use in life support, critical medical instruments, or any other application requiring extended temperature range, high reliability, or any other extraordinary environmental requirements unless pursuant to additional processing by Spectra Linear Inc., and an expressed written agreement by Spectra Linear Inc. Spectra Linear Inc. reserves the right to change any circuitry or specification without notice.

Мы молодая и активно развивающаяся компания в области поставок электронных компонентов. Мы поставляем электронные компоненты отечественного и импортного производства напрямую от производителей и с крупнейших складов мира.

Благодаря сотрудничеству с мировыми поставщиками мы осуществляем комплексные и плановые поставки широчайшего спектра электронных компонентов.

Собственная эффективная логистика и склад в обеспечивает надежную поставку продукции в точно указанные сроки по всей России.

Мы осуществляем техническую поддержку нашим клиентам и предпродажную проверку качества продукции. На все поставляемые продукты мы предоставляем гарантию .

Осуществляем поставки продукции под контролем ВП МО РФ на предприятия военно-промышленного комплекса России , а также работаем в рамках 275 ФЗ с открытием отдельных счетов в уполномоченном банке. Система менеджмента качества компании соответствует требованиям ГОСТ ISO 9001.

Минимальные сроки поставки, гибкие цены, неограниченный ассортимент и индивидуальный подход к клиентам являются основой для выстраивания долгосрочного и эффективного сотрудничества с предприятиями радиоэлектронной промышленности, предприятиями ВПК и научно-исследовательскими институтами России.

С нами вы становитесь еще успешнее!

Наши контакты:

Телефон: +7 812 627 14 35

Электронная почта: sales@st-electron.ru

Адрес: 198099, Санкт-Петербург, Промышленная ул, дом № 19, литера Н, помещение 100-Н Офис 331