Aluminum electrolytic capacitors

Snap-in capacitors

Series/Type: **B43545**

Date: December 2019

© TDK Electronics AG 2019. Reproduction, publication and dissemination of this publication, enclosures hereto and the information contained therein without TDK Electronics' prior express consent is prohibited.

Long-life grade capacitors

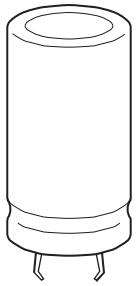

Applications

- Servo drives
- Frequency converters
- Solar inverters
- Uninterruptible power supplies
- Professional power supplies
- Medical appliances
- Not for automotive applications unless otherwise specified

Features

- Outstanding ripple current capability
- Improved charge/discharge robustness
- Base cooling available upon request for case sizes with diameters of 30 to 35 mm and lengths of 35 to 55 mm
- Long useful life
- Very high CV product, long useful life
- High reliability
- Extremely improved performance at high frequencies
- Outstanding low ESR at operating conditions above 50 °C
- Optimized internal thermal resistance
- Capacitors with all insulation versions pass the needle flame test according to IEC 60695-11-5 for all flame exposure times up to 120 s
- RoHS-compatible

Construction

- Rapid charge/discharge-proof, polar
- Aluminum case, fully insulated with PET
- Version with PVC insulation available upon request
- Version with PVC insulation and additional PET insulation cap on terminal side available for insulating the capacitor from the PCB
- Snap-in solder pins to hold component in place on PC-board
- Minus pole marking on case surface
- Minus pole not insulated from case
- Overload protection by safety vent on the case wall

Terminals

- Standard version with 2 terminals,
  2 lengths available: 6.3 and 4.5 mm
- 3 terminals to ensure correct insertion: length 4.5 mm

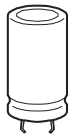

Specifications and characteristics in brief

Rated voltage V_R Surge voltage V_S	400 ... 500 V DC $1.10 \cdot V_R$	
Rated capacitance C_R Capacitance tolerance	68 ... 1000 µF ±20% ≙ M	
Dissipation factor tan δ (20 °C, 120 Hz)	V_R = 400 V DC: tan δ ≤ 0.15 V_R ≥ 450 V DC: tan δ ≤ 0.20	
Leakage current I_{leak} (5 min, 20 °C)	$I_{leak} \leq 0.3\ \mu A \cdot \left(\frac{C_R}{\mu F} \cdot \frac{V_R}{V}\right)^{0.7} + 4\ \mu A$	
Self-inductance ESL	Approx. 20 nH	
Useful life[1)] 105 °C; V_R; $I_{AC,R}$	> 5000 h	Requirements: |ΔC/C| ≤ 20% of initial value tan δ ≤ 2 times initial specified limit I_{leak} ≤ initial specified limit
Voltage endurance test 105 °C; V_R	2000 h	Post test requirements: |ΔC/C| ≤ 10% of initial value tan δ ≤ 1.3 times initial specified limit I_{leak} ≤ initial specified limit
Rapid charge/discharge ≤ 35 °C; ΔV ≤ 150 V; 6 Hz	> 50 million cycles	Requirements: |ΔC/C| ≤ 20% of initial value tan δ ≤ 2 times initial specified limit I_{leak} ≤ initial specified limit
	V_R = 400 ... 450 V; l ≤ 55 mm	
Vibration resistance test	To IEC 60068-2-6, test Fc: Frequency range 10 Hz ... 55 Hz, displacement amplitude 0.35 mm, acceleration max. 5 *g*, duration 3 × 2 h. Capacitor mounted by its body which is rigidly clamped to the work surface.	
Characteristics at low temperature	Max. impedance ratio at 100 Hz	

V_R	400 V	450 V	500 V
$Z_{-25\,°C} / Z_{20\,°C}$	3	5	7
$Z_{-40\,°C} / Z_{20\,°C}$	7	10	20

IEC climatic category	To IEC 60068-1: V_R ≤ 450: 40/105/56 (−40 °C/+105 °C/56 days damp heat test) V_R = 500: 25/105/56 (−25 °C/+105 °C/56 days damp heat test) The capacitors can be operated in the temperature range of −40 °C but the impedance at −40 °C must be taken into consideration.
Sectional specification	IEC 60384-4

1) Refer to chapter "General technical information, 5 Useful life" on how to interpret useful life.

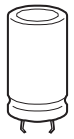

B43545

Outstanding ripple current, long useful life – 105 °C

Dimensional drawings

Snap-in capacitors with standard insulation (PET)

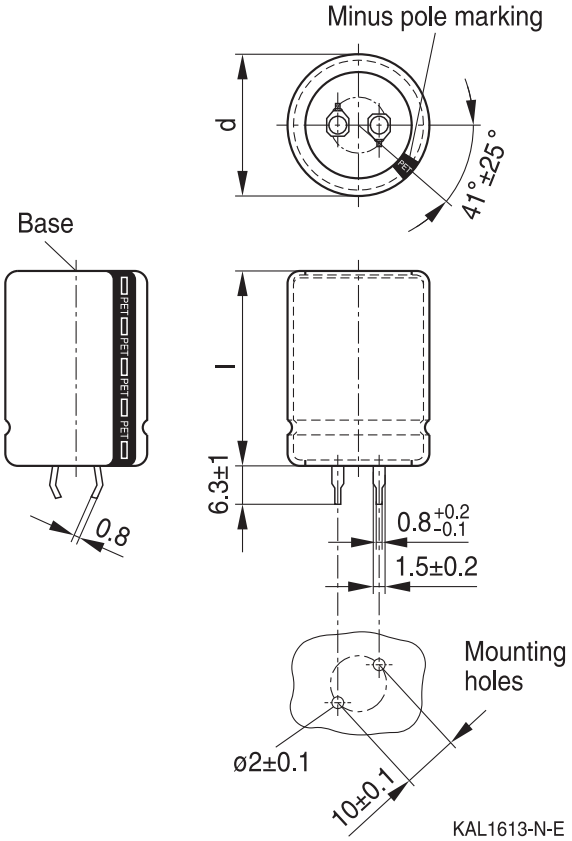

Dimensions (mm)		Approx. weight (g)	Packing units (pcs.)
d +1	l ±2		
25	25	13	130
25	30	17	130
25	35	19	130
25	40	22	130
25	45	25	130
25	50	29	130
25	55	32	130

Snap-in terminals, length (6.3 ±1) mm.
Also available in a shorter version with a length of (4.5 −1) mm.
Insulation is marked with "PET" on the sleeve.
Safety vent on the case wall.

B43545

Outstanding ripple current, long useful life – 105 °C

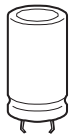

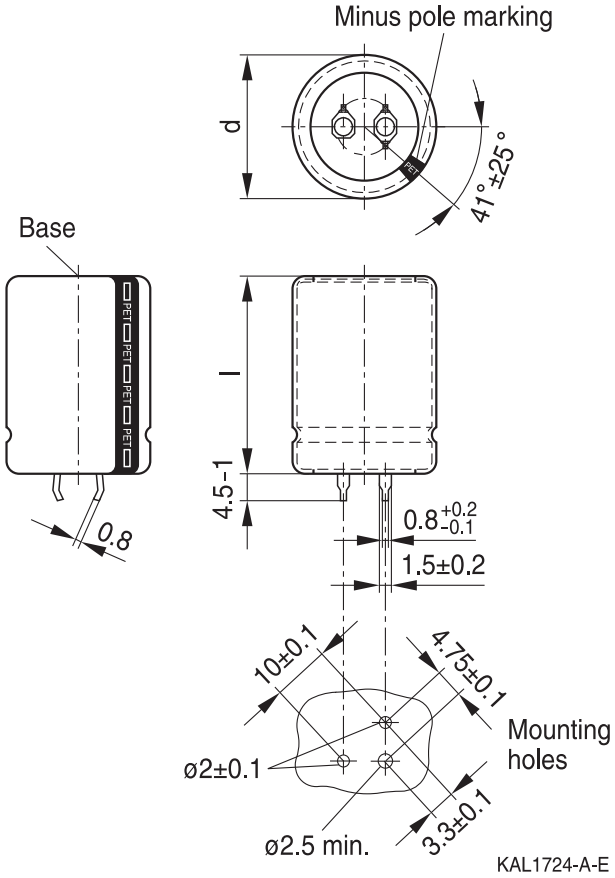

Dimensions (mm)		Approx. weight (g)	Packing units (pcs.)
d +1	l ±2		
30	25	17	80
30	30	23	80
30	35	29	80
30	40	36	80
30	45	41	80
30	50	46	80
30	55	53	80
30	60	58	60
30	65	64	60
30	70	69	60
30	75	74	60
30	80	80	60
35	25	22	60
35	30	29	60
35	35	36	60
35	40	41	60
35	45	56	60
35	50	70	60
35	55	81	60
35	60	90	36
35	65	102	36
35	70	115	36
35	75	128	36
35	80	142	36

Snap-in capacitors are also available with 3 terminals (length (4.5 –1) mm).
Insulation is marked with "PET" on the sleeve.
Safety vent on the case wall.

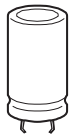

B43545

Outstanding ripple current, long useful life – 105 °C

Snap-in capacitors with PVC insulation and PET insulation cap on terminal side

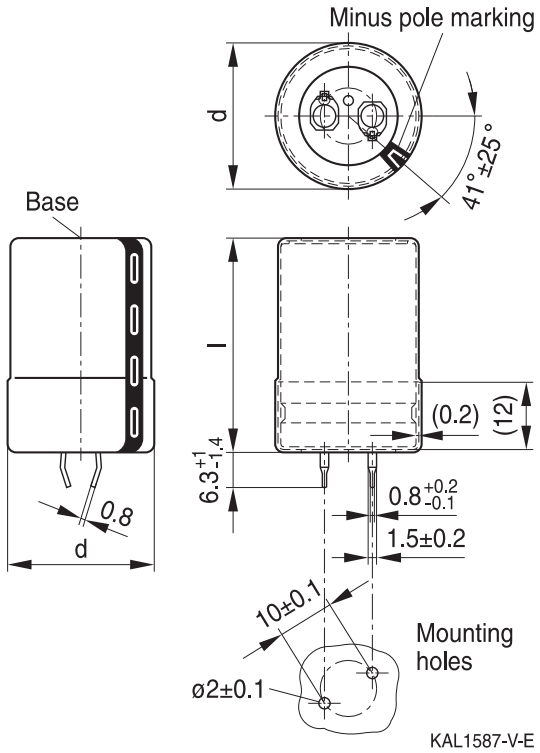

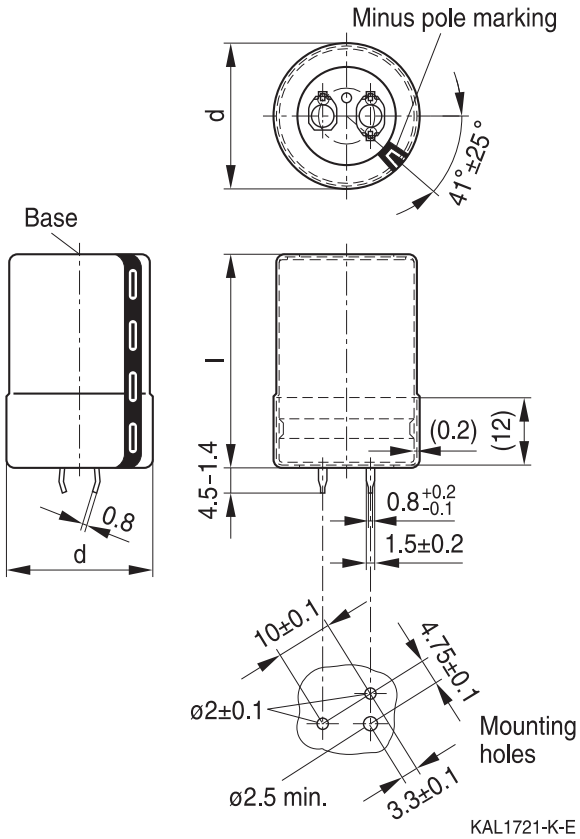

Snap-in terminals, length (6.3 +1/−1.4) mm. Also available in a shorter version with a length of (4.5 −1.4) mm. PET insulation cap is positioned under the insulation sleeve. Safety vent on the case wall.

Dimensions (mm)		Approx.	Packing
d +1.4	l +2.2/−2	weight (g)	units (pcs.)
25	25	13	115
25	30	17	115
25	35	19	115
25	40	22	115
25	45	25	115
25	50	29	115
25	55	32	115

Snap-in capacitors are also available with 3 terminals (length (4.5 −1.4) mm). PET insulation cap is positioned under the insulation sleeve. Safety vent on the case wall.

Dimensions (mm)		Approx.	Packing
d +1.4	l +2.2/−2	weight (g)	units (pcs.)
30	25	17	80
30	30	23	80
30	35	29	80
30	40	36	80
30	45	41	80
30	50	46	80
30	55	53	80
35	25	22	60
35	30	29	60
35	35	36	60
35	40	41	60
35	45	56	60
35	50	70	60
35	55	81	60

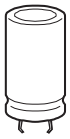

Packing of snap-in capacitors

For ecological reasons the packing is pure cardboard.

Ordering codes for terminal styles and insulation features

Identification in 3rd block of ordering code

Snap-in capacitors		
Terminal version	Insulation version	
	PET	PVC plus PET cap
Standard terminals 6.3 mm	M060	M080
Short terminals 4.5 mm	M067	M087
3 terminals 4.5 mm	M062	M082

Ordering examples:

B43545A5107M067 } snap-in capacitor with short terminals and PET insulation
B43545A5107M062 } snap-in capacitor with 3 terminals and PET insulation
B43545A5107M080 } snap-in capacitor with standard terminals and PVC insulation with additional PET insulation cap on terminal side

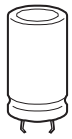

B43545

Outstanding ripple current, long useful life – 105 °C

Overview of available types

The capacitance and voltage ratings listed above are available in different case sizes upon request. Other voltage and capacitance ratings are also available upon request.

V_R (V DC)	400	450	500
	Case dimensions d × l (mm)		
C_R (µF)			
68			25 × 25
82		25 × 25	25 × 30
100		25 × 30	25 × 35 30 × 25
120	25 × 25	25 × 35 30 × 25	25 × 35 30 × 30
150	25 × 30	25 × 40 30 × 30	25 × 45 30 × 35 35 × 25
180	25 × 35 30 × 25	25 × 45 30 × 35 35 × 25	25 × 50 30 × 35 35 × 30
220	25 × 35 30 × 30	25 × 50 30 × 35 35 × 30	25 × 55 30 × 40 35 × 35
270	25 × 45 30 × 35 35 × 25	30 × 45 35 × 35	30 × 50 35 × 40
330	25 × 50 30 × 35 35 × 30	30 × 50 35 × 40	30 × 55 35 × 45
390	25 × 55 30 × 40 35 × 35	30 × 55 35 × 45	35 × 50
470	30 × 50 35 × 40	30 × 65 35 × 50	35 × 55
560	30 × 55 35 × 40	30 × 75 35 × 55	
680	30 × 70 35 × 50	35 × 70	
820	30 × 80 35 × 55	35 × 80	
1000	35 × 70		

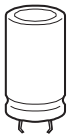

Technical data and ordering codes

C_R 100 Hz 20 °C µF	Case dimensions d × l mm	ESR_{typ} 100 Hz 20 °C mΩ	ESR_{typ} 300 Hz 60 °C mΩ	Z_{max} 10 kHz 20 °C mΩ	$I_{AC,max}$ 100 Hz 60 °C A	$I_{AC,max}$ 100 Hz 85 °C A	$I_{AC,R}$ 100 Hz 105 °C A	Ordering code (composition see below)
V_R = 400 V DC								
120	25 × 25	500	160	700	2.23	1.64	0.88	B43545A9127M0*#
150	25 × 30	400	130	550	2.60	1.92	1.04	B43545A9157M0*#
180	25 × 35	330	110	460	2.96	2.19	1.18	B43545A9187M0*#
180	30 × 25	330	100	460	3.12	2.31	1.24	B43545B9187M0*#
220	25 × 35	270	90	380	3.36	2.48	1.33	B43545A9227M0*#
220	30 × 30	270	85	370	3.58	2.64	1.42	B43545B9227M0*#
270	25 × 45	220	70	310	3.96	2.93	1.58	B43545A9277M0*#
270	30 × 35	220	70	300	4.12	3.04	1.64	B43545B9277M0*#
270	35 × 25	220	75	310	4.15	3.06	1.65	B43545C9277M0*#
330	25 × 50	180	60	260	4.58	3.39	1.82	B43545A9337M0*#
330	30 × 35	180	55	250	4.69	3.46	1.86	B43545B9337M0*#
330	35 × 30	180	60	260	4.79	3.54	2.03	B43545C9337M0*#
390	25 × 55	160	50	220	5.19	3.84	2.07	B43545A9397M0*#
390	30 × 40	150	50	210	5.30	3.91	2.24	B43545B9397M0*#
390	35 × 35	150	50	220	5.38	3.98	2.28	B43545C9397M0*#
470	30 × 50	130	40	180	6.11	4.51	2.59	B43545A9477M0*#
470	35 × 40	130	40	180	6.11	4.52	2.59	B43545B9477M0*#
560	30 × 55	110	34	150	6.95	5.13	2.94	B43545A9567M0*#
560	35 × 40	110	36	160	6.80	5.02	2.87	B43545B9567M0*#
680	30 × 70	95	28	140	8.27	6.15	3.53	B43545B9687M0*#
680	35 × 50	90	30	130	7.87	5.82	3.33	B43545A9687M0*#
820	30 × 80	80	24	110	9.62	7.14	4.10	B43545B9827M0*#
820	35 × 55	75	26	110	8.99	6.64	3.80	B43545A9827M0*#
1000	35 × 70	65	20	100	10.7	7.95	4.56	B43545A9108M0*#

Composition of ordering code

* = Insulation feature
- 6 = PET insulation
- 8 = PVC insulation with additional PET insulation cap on terminal side

\# = Terminal style
- 0 = snap-in standard terminals (6.3 mm)
- 2 = snap-in 3 terminals (4.5 mm)
- 7 = snap-in short terminals (4.5 mm)

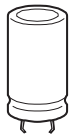

B43545

Outstanding ripple current, long useful life – 105 °C

Technical data and ordering codes

C_R 100 Hz 20 °C µF	Case dimensions d × l mm	ESR_{typ} 100 Hz 20 °C mΩ	ESR_{typ} 300 Hz 60 °C mΩ	Z_{max} 10 kHz 20 °C mΩ	$I_{AC,max}$ 100 Hz 60 °C A	$I_{AC,max}$ 100 Hz 85 °C A	$I_{AC,R}$ 100 Hz 105 °C A	Ordering code (composition see below)
V_R = 450 V DC								
82	25 × 25	1110	290	1680	1.73	1.33	0.71	B43545B5826M0*#
100	25 × 30	910	240	1370	2.06	1.52	0.82	B43545A5107M0*#
120	25 × 35	760	200	1140	2.34	1.73	0.94	B43545B5127M0*#
120	30 × 25	750	190	1140	2.47	1.81	0.98	B43545A5127M0*#
150	25 × 40	610	160	920	2.74	2.02	1.09	B43545A5157M0*#
150	30 × 30	600	150	910	2.86	2.10	1.14	B43545B5157M0*#
180	25 × 45	500	130	770	3.13	2.30	1.25	B43545A5187M0*#
180	30 × 35	500	130	760	3.24	2.38	1.29	B43545B5187M0*#
180	35 × 25	510	130	770	3.32	2.44	1.32	B43545C5187M0*#
220	25 × 50	410	110	630	3.63	2.67	1.45	B43545A5227M0*#
220	30 × 35	410	110	630	3.70	2.72	1.47	B43545B5227M0*#
220	35 × 30	410	110	630	3.82	2.81	1.62	B43545C5227M0*#
270	30 × 45	330	85	510	4.31	3.17	1.83	B43545A5277M0*#
270	35 × 35	340	90	510	4.37	3.22	1.85	B43545B5277M0*#
330	30 × 50	270	70	420	4.98	3.66	2.11	B43545A5337M0*#
330	35 × 40	280	70	420	5.02	3.69	2.13	B43545B5337M0*#
390	30 × 55	230	60	350	5.64	4.15	2.39	B43545A5397M0*#
390	35 × 45	230	60	360	5.63	4.14	2.39	B43545B5397M0*#
470	30 × 65	200	50	300	6.42	4.77	2.74	B43545B5477M0*#
470	35 × 50	190	50	300	6.41	4.72	2.72	B43545A5477M0*#
560	30 × 75	160	45	250	7.39	5.49	3.15	B43545B5567M0*#
560	35 × 55	160	45	250	7.28	5.35	3.08	B43545A5567M0*#
680	35 × 70	140	36	210	8.34	6.20	3.56	B43545A5687M0*#
820	35 × 80	110	30	180	9.62	7.15	4.11	B43545A5827M0*#

Composition of ordering code

* = Insulation feature
- 6 = PET insulation
- 8 = PVC insulation with additional PET insulation cap on terminal side

\# = Terminal style
- 0 = snap-in standard terminals (6.3 mm)
- 2 = snap-in 3 terminals (4.5 mm)
- 7 = snap-in short terminals (4.5 mm)

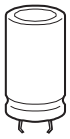

Technical data and ordering codes

C_R 100 Hz 20 °C µF	Case dimensions d × l mm	ESR_{typ} 100 Hz 20 °C mΩ	ESR_{typ} 300 Hz 60 °C mΩ	Z_{max} 10 kHz 20 °C mΩ	$I_{AC,max}$ 100 Hz 60 °C A	$I_{AC,max}$ 100 Hz 85 °C A	$I_{AC,R}$ 100 Hz 105 °C A	Ordering code (composition see below)
V_R = 500 V DC								
68	25 × 25	1220	340	1810	1.43	1.22	0.61	B43545A6686M0*#
82	25 × 30	1010	280	1500	1.73	1.39	0.69	B43545A6826M0*#
100	25 × 35	830	230	1230	2.11	1.60	0.80	B43545A6107M0*#
100	30 × 25	820	220	1220	2.11	1.68	0.84	B43545B6107M0*#
120	25 × 35	690	190	1030	2.42	1.80	0.90	B43545A6127M0*#
120	30 × 30	690	180	1020	2.53	1.90	0.95	B43545B6127M0*#
150	25 × 45	550	150	820	2.87	2.14	1.07	B43545A6157M0*#
150	30 × 35	550	150	810	2.97	2.21	1.10	B43545B6157M0*#
150	35 × 25	550	150	820	3.06	2.27	1.13	B43545C6157M0*#
180	25 × 50	460	130	690	3.28	2.44	1.22	B43545A6187M0*#
180	30 × 35	460	120	680	3.34	2.48	1.24	B43545B6187M0*#
180	35 × 30	460	130	690	3.46	2.57	1.37	B43545C6187M0*#
220	25 × 55	380	100	560	3.81	2.83	1.41	B43545A6227M0*#
220	30 × 40	380	100	560	3.84	2.85	1.52	B43545B6227M0*#
220	35 × 35	380	100	560	3.96	2.94	1.57	B43545C6227M0*#
270	30 × 50	310	85	460	4.47	3.33	1.77	B43545A6277M0*#
270	35 × 40	310	85	460	4.53	3.37	1.80	B43545B6277M0*#
330	30 × 55	250	70	370	5.19	3.86	2.06	B43545A6337M0*#
330	35 × 45	250	70	380	5.20	3.86	2.06	B43545B6337M0*#
390	35 × 50	210	60	320	5.84	4.34	2.31	B43545A6397M0*#
470	35 × 55	180	50	270	6.66	4.95	2.64	B43545A6477M0*#

Composition of ordering code

* = Insulation feature
- 6 = PET insulation
- 8 = PVC insulation with additional PET insulation cap on terminal side

\# = Terminal style
- 0 = snap-in standard terminals (6.3 mm)
- 2 = snap-in 3 terminals (4.5 mm)
- 7 = snap-in short terminals (4.5 mm)

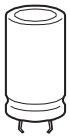

B43545

Outstanding ripple current, long useful life – 105 °C

Useful life[1)]

For useful life calculations, please use our web-based "AlCap Useful Life Calculation Tool", which can be found on the Internet under the following link:
www.tdk-electronics.tdk.com/alcap
The AlCap Useful Life Calculation Tool provides calculations of useful life as well as additional data for selected capacitor types under operating conditions defined by the user.

In addition, it is possible to calculate useful life expectancies based on temperatures measured by the user in the application.

Frequency characteristics of ESR
Typical behavior

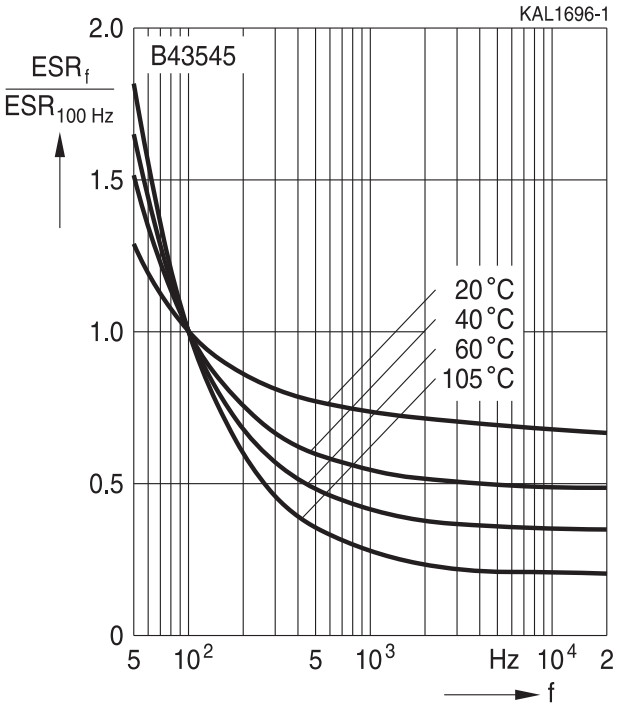

Impedance Z versus frequency f
Typical behavior at 20 °C

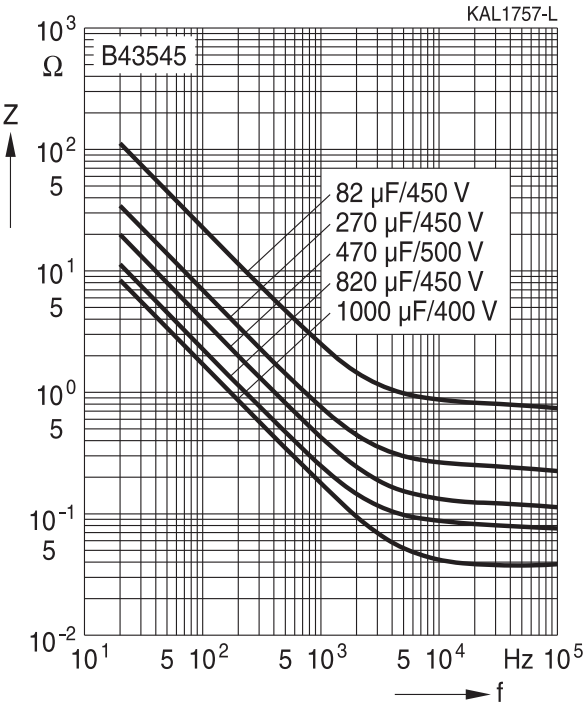

1) Refer to chapter "General technical information, 5 Useful life" on how to interpret useful life.

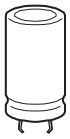

Cautions and warnings

Personal safety

The electrolytes used have been optimized both with a view to the intended application and with regard to health and environmental compatibility. They do not contain any solvents that are detrimental to health, e.g. dimethyl formamide (DMF) or dimethyl acetamide (DMAC). Furthermore, some of the high-voltage electrolytes used are self-extinguishing.

As far as possible, we do not use any dangerous chemicals or compounds to produce operating electrolytes, although in exceptional cases, such materials must be used in order to achieve specific physical and electrical properties because no alternative materials are currently known. We do, however, restrict the amount of dangerous materials used in our products to an absolute minimum.

Materials and chemicals used in our aluminum electrolytic capacitors are continuously adapted in compliance with the TDK Electronics Corporate Environmental Policy and the latest EU regulations and guidelines such as RoHS, REACH/SVHC, GADSL, and ELV.

MDS (Material Data Sheets) are available on our website for all types listed in the data book.
MDS for customer specific capacitors are available upon request.
MSDS (Material Safety Data Sheets) are available for our electrolytes upon request.

Nevertheless, the following rules should be observed when handling aluminum electrolytic capacitors: No electrolyte should come into contact with eyes or skin. If electrolyte does come into contact with the skin, wash the affected areas immediately with running water. If the eyes are affected, rinse them for 10 minutes with plenty of water. If symptoms persist, seek medical treatment. Avoid inhaling electrolyte vapor or mists. Workplaces and other affected areas should be well ventilated. Clothing that has been contaminated by electrolyte must be changed and rinsed in water.

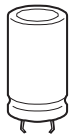

Product safety

The table below summarizes the safety instructions that must be observed without fail. A detailed description can be found in the relevant sections of seperate file chapter "General technical information".

Topic	Safety information	Reference chapter "General technical information"
Polarity	Make sure that polar capacitors are connected with the right polarity.	1 "Basic construction of aluminum electrolytic capacitors"
Reverse voltage	Voltages of opposite polarity should be prevented by connecting a diode.	3.1.6 "Reverse voltage"
Mounting position of screw-terminal capacitors	Screw terminal capacitors must not be mounted with terminals facing down unless otherwise specified.	11.1. "Mounting positions of capacitors with screw terminals"
Robustness of terminals	The following maximum tightening torques must not be exceeded when connecting screw terminals: M5: 2.5 Nm M6: 4.0 Nm	11.3 "Mounting torques"
Mounting of single-ended capacitors	The internal structure of single-ended capacitors might be damaged if excessive force is applied to the lead wires. Avoid any compressive, tensile or flexural stress. Do not move the capacitor after soldering to PC board. Do not pick up the PC board by the soldered capacitor. Do not insert the capacitor on the PC board with a hole space different to the lead space specified.	11.4 "Mounting considerations for single-ended capacitors"
Soldering	Do not exceed the specified time or temperature limits during soldering.	11.5 "Soldering"
Soldering, cleaning agents	Do not allow halogenated hydrocarbons to come into contact with aluminum electrolytic capacitors.	11.6 "Cleaning agents"
Upper category temperature	Do not exceed the upper category temperature.	7.2 "Maximum permissible operating temperature"
Passive flammability	Avoid external energy, e.g. fire.	8.1 "Passive flammability"

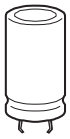

Topic	Safety information	Reference chapter "General technical information"
Active flammability	Avoid overload of the capacitors.	8.2 "Active flammability"
Maintenance	Make periodic inspections of the capacitors. Before the inspection, make sure that the power supply is turned off and carefully discharge the capacitors. Do not apply excessive mechanical stress to the capacitor terminals when mounting.	10 "Maintenance"
Storage	Do not store capacitors at high temperatures or high humidity. Capacitors should be stored at +5 to +35 °C and a relative humidity of ≤ 75%.	7.3 "Shelf life and storage conditions"
		Reference chapter "Capacitors with screw terminals"
Breakdown strength of insulating sleeves	Do not damage the insulating sleeve, especially when ring clips are used for mounting.	"Screw terminals – accessories"

Display of ordering codes for TDK Electronics products

The ordering code for one and the same product can be represented differently in data sheets, data books, other publications, on the company website, or in order-related documents such as shipping notes, order confirmations and product labels. The varying representations of the ordering codes are due to different processes employed and do not affect the specifications of the respective products.
Detailed information can be found on the Internet under
www.tdk-electronics.tdk.com/orderingcodes.

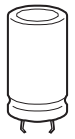

Symbols and terms

Symbol	English	German
C	Capacitance	Kapazität
C_R	Rated capacitance	Nennkapazität
C_S	Series capacitance	Serienkapazität
$C_{S,T}$	Series capacitance at temperature T	Serienkapazität bei Temperatur T
C_f	Capacitance at frequency f	Kapazität bei Frequenz f
d	Case diameter, nominal dimension	Gehäusedurchmesser, Nennmaß
d_{max}	Maximum case diameter	Maximaler Gehäusedurchmesser
ESL	Self-inductance	Eigeninduktivität
ESR	Equivalent series resistance	Ersatzserienwiderstand
ESR_f	Equivalent series resistance at frequency f	Ersatzserienwiderstand bei Frequenz f
ESR_T	Equivalent series resistance at temperature T	Ersatzserienwiderstand bei Temperatur T
f	Frequency	Frequenz
I	Current	Strom
I_{AC}	Alternating current (ripple current)	Wechselstrom
$I_{AC,RMS}$	Root-mean-square value of alternating current	Wechselstrom, Effektivwert
$I_{AC,f}$	Ripple current at frequency f	Wechselstrom bei Frequenz f
$I_{AC,max}$	Maximum permissible ripple current	Maximal zulässiger Wechselstrom
$I_{AC,R}$	Rated ripple current	Nennwechselstrom
I_{leak}	Leakage current	Reststrom
$I_{leak,op}$	Operating leakage current	Betriebsreststrom
l	Case length, nominal dimension	Gehäuselänge, Nennmaß
l_{max}	Maximum case length (without terminals and mounting stud)	Maximale Gehäuselänge (ohne Anschlüsse und Gewindebolzen)
R	Resistance	Widerstand
R_{ins}	Insulation resistance	Isolationswiderstand
R_{symm}	Balancing resistance	Symmetrierwiderstand
T	Temperature	Temperatur
ΔT	Temperature difference	Temperaturdifferenz
T_A	Ambient temperature	Umgebungstemperatur
T_C	Case temperature	Gehäusetemperatur
T_B	Capacitor base temperature	Temperatur des Gehäusebodens
t	Time	Zeit
Δt	Period	Zeitraum
t_b	Service life (operating hours)	Brauchbarkeitsdauer (Betriebszeit)

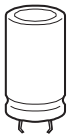

Symbol	English	German
V	Voltage	Spannung
V_F	Forming voltage	Formierspannung
V_{op}	Operating voltage	Betriebsspannung
V_R	Rated voltage, DC voltage	Nennspannung, Gleichspannung
V_S	Surge voltage	Spitzenspannung
X_C	Capacitive reactance	Kapazitiver Blindwiderstand
X_L	Inductive reactance	Induktiver Blindwiderstand
Z	Impedance	Scheinwiderstand
Z_T	Impedance at temperature T	Scheinwiderstand bei Temperatur T
$\tan \delta$	Dissipation factor	Verlustfaktor
λ	Failure rate	Ausfallrate
ε_0	Absolute permittivity	Elektrische Feldkonstante
ε_r	Relative permittivity	Dielektrizitätszahl
ω	Angular velocity; $2 \cdot \pi \cdot f$	Kreisfrequenz; $2 \cdot \pi \cdot f$

Note

All dimensions are given in mm.

Important notes

The following applies to all products named in this publication:

1. Some parts of this publication contain **statements about the suitability of our products for certain areas of application**. These statements are based on our knowledge of typical requirements that are often placed on our products in the areas of application concerned. We nevertheless expressly point out **that such statements cannot be regarded as binding statements about the suitability of our products for a particular customer application**. As a rule, we are either unfamiliar with individual customer applications or less familiar with them than the customers themselves. For these reasons, it is always ultimately incumbent on the customer to check and decide whether a product with the properties described in the product specification is suitable for use in a particular customer application.
2. We also point out that **in individual cases, a malfunction of electronic components or failure before the end of their usual service life cannot be completely ruled out in the current state of the art, even if they are operated as specified**. In customer applications requiring a very high level of operational safety and especially in customer applications in which the malfunction or failure of an electronic component could endanger human life or health (e.g. in accident prevention or lifesaving systems), it must therefore be ensured by means of suitable design of the customer application or other action taken by the customer (e.g. installation of protective circuitry or redundancy) that no injury or damage is sustained by third parties in the event of malfunction or failure of an electronic component.
3. **The warnings, cautions and product-specific notes must be observed.**
4. In order to satisfy certain technical requirements, **some of the products described in this publication may contain substances subject to restrictions in certain jurisdictions (e.g. because they are classed as hazardous)**. Useful information on this will be found in our Material Data Sheets on the Internet (www.tdk-electronics.tdk.com/material). Should you have any more detailed questions, please contact our sales offices.
5. We constantly strive to improve our products. Consequently, **the products described in this publication may change from time to time**. The same is true of the corresponding product specifications. Please check therefore to what extent product descriptions and specifications contained in this publication are still applicable before or when you place an order. We also **reserve the right to discontinue production and delivery of products**. Consequently, we cannot guarantee that all products named in this publication will always be available. The aforementioned does not apply in the case of individual agreements deviating from the foregoing for customer-specific products.
6. Unless otherwise agreed in individual contracts, **all orders are subject to our General Terms and Conditions of Supply**.

Important notes

7. **Our manufacturing sites serving the automotive business apply the IATF 16949 standard.** The IATF certifications confirm our compliance with requirements regarding the quality management system in the automotive industry. Referring to customer requirements and customer specific requirements ("CSR") TDK always has and will continue to have the policy of respecting individual agreements. Even if IATF 16949 may appear to support the acceptance of unilateral requirements, we hereby like to emphasize that **only requirements mutually agreed upon can and will be implemented in our Quality Management System.** For clarification purposes we like to point out that obligations from IATF 16949 shall only become legally binding if individually agreed upon.
8. The trade names EPCOS, CeraCharge, CeraDiode, CeraLink, CeraPad, CeraPlas, CSMP, CTVS, DeltaCap, DigiSiMic, ExoCore, FilterCap, FormFit, LeaXield, MiniBlue, MiniCell, MKD, MKK, MotorCap, PCC, PhaseCap, PhaseCube, PhaseMod, PhiCap, PowerHap, PQSine, PQvar, SIFERRIT, SIFI, SIKOREL, SilverCap, SIMDAD, SiMic, SIMID, SineFormer, SIOV, ThermoFuse, WindCap are **trademarks registered or pending** in Europe and in other countries. Further information will be found on the Internet at www.tdk-electronics.tdk.com/trademarks.

Release 2018-10

Mouser Electronics

Authorized Distributor

Click to View Pricing, Inventory, Delivery & Lifecycle Information:

EPCOS / TDK:

B43545A5397M062 B43545A5277M000 B43545A9687M007 B43545C9397M002 B43545B9337M007
B43545B9567M000 B43545A5567M062 B43545B9477M007 B43545A5337M007 B43545B9227M007
B43545A5477M002 B43545A9477M007 B43545A5337M000 B43545A5477M060 B43545A5567M002
B43545B9477M060 B43545C9397M062 B43545A5567M007 B43545A9687M087 B43545A5127M002
B43545B9567M060 B43545A9827M002 B43545A9157M002 B43545A9827M062 B43545B9397M087
B43545A5107M000 B43545A5567M000 B43545A5567M082 B43545B5227M000 B43545A9157M000
B43545A9477M000 B43545B9227M000 B43545A9687M000 B43545A9827M000 B43545A9337M000
B43545B9187M000 B43545B5187M000 B43545B5337M000 B43545A9187M000 B43545B9567M007
B43545B9397M000 B43545A5477M000 B43545A9567M000 B43545C9397M000 B43545B5277M000
B43545B5397M000 B43545B9477M000 B43545C9337M000 B43545A5397M000 B43545B9337M000
B43545A5157M000 B43545A9827M082 B43545B5397M002 B43545B9227M002

Мы молодая и активно развивающаяся компания в области поставок электронных компонентов. Мы поставляем электронные компоненты отечественного и импортного производства напрямую от производителей и с крупнейших складов мира.

Благодаря сотрудничеству с мировыми поставщиками мы осуществляем комплексные и плановые поставки широчайшего спектра электронных компонентов.

Собственная эффективная логистика и склад в обеспечивает надежную поставку продукции в точно указанные сроки по всей России.

Мы осуществляем техническую поддержку нашим клиентам и предпродажную проверку качества продукции. На все поставляемые продукты мы предоставляем гарантию .

Осуществляем поставки продукции под контролем ВП МО РФ на предприятия военно-промышленного комплекса России , а также работаем в рамках 275 ФЗ с открытием отдельных счетов в уполномоченном банке. Система менеджмента качества компании соответствует требованиям ГОСТ ISO 9001.

Минимальные сроки поставки, гибкие цены, неограниченный ассортимент и индивидуальный подход к клиентам являются основой для выстраивания долгосрочного и эффективного сотрудничества с предприятиями радиоэлектронной промышленности, предприятиями ВПК и научно-исследовательскими институтами России.

С нами вы становитесь еще успешнее!

Наши контакты:

Телефон: +7 812 627 14 35

Электронная почта: sales@st-electron.ru

Адрес: 198099, Санкт-Петербург, Промышленная ул, дом № 19, литера Н, помещение 100-Н Офис 331