# 25AA640A/25LC640A

## 64K SPI Bus Serial EEPROM

### Device Selection Table

| Part Number | Vcc Range | Page Size | Temp. Ranges | Packages |
|---|---|---|---|---|
| 25LC640A | 2.5-5.5V | 32 Byte | I,E | P, SN, ST, MS, MF, MNY |
| 25AA640A | 1.8-5.5V | 32 Byte | I, E | P, SN, ST, MS, MF, MNY |

### Features:

- Max. Clock 10 MHz
- Low-Power CMOS Technology:
  - Max. Write Current: 5 mA at 5.5V, 10 MHz
  - Read Current: 5 mA at 5.5V, 10 MHz
  - Standby Current: 1 µA at 5.5V
- 8192 x 8-bit Organization
- 32 Byte Page
- Self-Timed Erase and Write Cycles (5 ms max.)
- Block Write Protection:
  - Protect none, 1/4, 1/2 or all of array
- Built-In Write Protection:
  - Power-on/off data protection circuitry
  - Write enable latch
  - Write-protect pin
- Sequential Read
- High Reliability:
  - Endurance: 1,000,000 erase/write cycles
  - Data retention: > 200 years
  - ESD protection: > 4000V
- Temperature Ranges Supported:
  - Industrial (I): -40°C to +85°C
  - Automotive (E): -40°C to +125°C

### Description:

The Microchip Technology Inc. 25AA640A/25LC640A (25XX640A*) are 64 kbit Serial Electrically Erasable PROMs. The memory is accessed via a simple Serial Peripheral Interface (SPI) compatible serial bus. The bus signals required are a clock input (SCK) plus separate data in (SI) and data out (SO) lines. Access to the device is controlled through a Chip Select ($\overline{CS}$) input.

Communication to the device can be paused via the hold pin ($\overline{HOLD}$). While the device is paused, transitions on its inputs will be ignored, with the exception of Chip Select, allowing the host to service higher priority interrupts.

The 25XX640A is available in standard packages including 8-lead PDIP and SOIC, and advanced packaging including 8-lead MSOP, 8-lead TSSOP, DFN and TDFN.

### Package Types (not to scale)

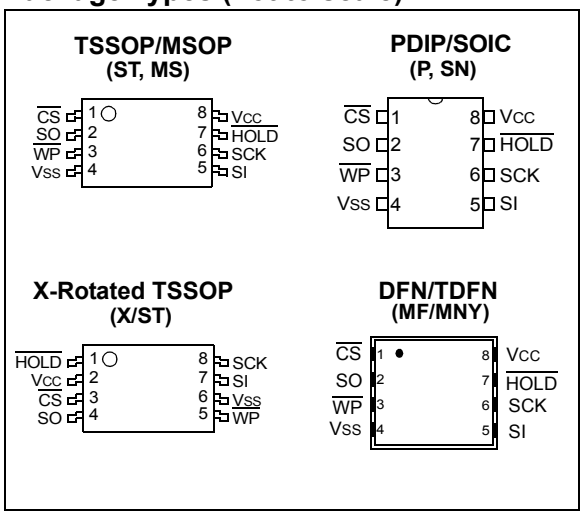


* 25XX640A is used in this document as a generic part number for the 25AA640A, 25LC640A devices.

© 2003-2013 Microchip Technology Inc.

## 1.0 ELECTRICAL CHARACTERISTICS

### Absolute Maximum Ratings(†)

$V_{CC}$ ..... 6.5V

All inputs and outputs w.r.t. $V_{SS}$ ..... -0.6V to $V_{CC}$ +1.0V

Storage temperature ..... -65°C to 150°C

Ambient temperature under bias ..... -40°C to 125°C

ESD protection on all pins ..... 4 kV

† NOTICE: Stresses above those listed under “Absolute Maximum Ratings” may cause permanent damage to the device. This is a stress rating only and functional operation of the device at those or any other conditions above those indicated in the operational listings of this specification is not implied. Exposure to maximum rating conditions for an extended period of time may affect device reliability.

**TABLE 1-1: DC CHARACTERISTICS**

| DC CHARACTERISTICS | | | Industrial (I): $T_A$ = -40°C to +85°C $V_{CC}$ = 1.8V to 5.5V<br>Automotive (E): $T_A$ = -40°C to +125°C $V_{CC}$ = 1.8V to 5.5V | | | |
|---|---|---|---|---|---|---|
| **Param. No.** | **Sym.** | **Characteristic** | **Min.** | **Max.** | **Units** | **Test Conditions** |
| D001 | $V_{IH1}$ | High-level input voltage | 0.7 $V_{CC}$ | $V_{CC}$ +1 | V | |
| D002 | $V_{IL1}$ | Low-level input voltage | -0.3 | 0.3 $V_{CC}$ | V | $V_{CC} \geq 2.7V$ |
| D003 | $V_{IL2}$ | | -0.3 | 0.2 $V_{CC}$ | V | $V_{CC} < 2.7V$ |
| D004 | $V_{OL}$ | Low-level output voltage | — | 0.4 | V | $I_{OL}$ = 2.1 mA |
| D005 | $V_{OL}$ | | — | 0.2 | V | $I_{OL}$ = 1.0 mA, $V_{CC} < 2.5V$ |
| D006 | $V_{OH}$ | High-level output voltage | $V_{CC}$ -0.5 | — | V | $I_{OH}$ = -400 μA |
| D007 | $I_{LI}$ | Input leakage current | — | ±1 | μA | $\overline{CS}$ = $V_{CC}$, $V_{IN}$ = $V_{SS}$ or $V_{CC}$ |
| D008 | $I_{LO}$ | Output leakage current | — | ±1 | μA | $\overline{CS}$ = $V_{CC}$, $V_{OUT}$ = $V_{SS}$ or $V_{CC}$ |
| D009 | $C_{INT}$ | Internal Capacitance (all inputs and outputs) | — | 7 | pF | $T_A$ = 25°C, CLK = 1.0 MHz, $V_{CC}$ = 5.0V (**Note**) |
| D010 | $I_{CC}$ Read | Operating Current | —<br>— | 5<br>2.5 | mA<br>mA | $V_{CC}$ = 5.5V; $F_{CLK}$ = 10.0 MHz; SO = Open<br>$V_{CC}$ = 2.5V; $F_{CLK}$ = 5.0 MHz; SO = Open |
| D011 | $I_{CC}$ Write | | —<br>— | 5<br>3 | mA<br>mA | $V_{CC}$ = 5.5V<br>$V_{CC}$ = 2.5V |
| D012 | $I_{CCS}$ | Standby Current | —<br>— | 5<br>1 | μA<br>μA | $\overline{CS}$ = $V_{CC}$ = 5.5V, Inputs tied to $V_{CC}$ or $V_{SS}$, 125°C<br>$\overline{CS}$ = $V_{CC}$ = 5.5V, Inputs tied to $V_{CC}$ or $V_{SS}$, 85°C |

**Note:** This parameter is periodically sampled and not 100% tested.


© 2003-2013 Microchip Technology Inc.

**TABLE 1-2: AC CHARACTERISTICS**

| AC CHARACTERISTICS | | | Industrial (I): TA = -40°C to +85°C VCC = 1.8V to 5.5V<br>Automotive (E): TA = -40°C to +125°C VCC = 1.8V to 5.5V | | | |
|---|---|---|---|---|---|---|
| **Param. No.** | **Sym.** | **Characteristic** | **Min.** | **Max.** | **Units** | **Test Conditions** |
| 1 | FCLK | Clock frequency | —<br>—<br>— | 10<br>5<br>3 | MHz<br>MHz<br>MHz | 4.5V ≤ Vcc ≤ 5.5V<br>2.5V ≤ Vcc < 4.5V<br>1.8V ≤ Vcc < 2.5V |
| 2 | TCSS | $\overline{CS}$ setup time | 50<br>100<br>150 | —<br>—<br>— | ns<br>ns<br>ns | 4.5V ≤ Vcc ≤ 5.5V<br>2.5V ≤ Vcc < 4.5V<br>1.8V ≤ Vcc < 2.5V |
| 3 | TCSH | $\overline{CS}$ hold time | 100<br>200<br>250 | —<br>—<br>— | ns<br>ns<br>ns | 4.5V ≤ Vcc ≤ 5.5V<br>2.5V ≤ Vcc < 4.5V<br>1.8V ≤ Vcc < 2.5V |
| 4 | TCSD | $\overline{CS}$ disable time | 50 | — | ns | — |
| 5 | Tsu | Data setup time | 10<br>20<br>30 | —<br>—<br>— | ns<br>ns<br>ns | 4.5V ≤ Vcc ≤ 5.5V<br>2.5V ≤ Vcc < 4.5V<br>1.8V ≤ Vcc < 2.5V |
| 6 | THD | Data hold time | 20<br>40<br>50 | —<br>—<br>— | ns<br>ns<br>ns | 4.5V ≤ Vcc ≤ 5.5V<br>2.5V ≤ Vcc < 4.5V<br>1.8V ≤ Vcc < 2.5V |
| 7 | TR | CLK rise time | — | 100 | ns | **(Note 1)** |
| 8 | TF | CLK fall time | — | 100 | ns | **(Note 1)** |
| 9 | THI | Clock high time | 50<br>100<br>150 | —<br>—<br>— | ns<br>ns<br>ns | 4.5V ≤ Vcc ≤ 5.5V<br>2.5V ≤ Vcc < 4.5V<br>1.8V ≤ Vcc < 2.5V |
| 10 | TLO | Clock low time | 50<br>100<br>150 | —<br>—<br>— | ns<br>ns<br>ns | 4.5V ≤ Vcc ≤ 5.5V<br>2.5V ≤ Vcc < 4.5V<br>1.8V ≤ Vcc < 2.5V |
| 11 | TCLD | Clock delay time | 50 | — | ns | — |
| 12 | TCLE | Clock enable time | 50 | — | ns | — |
| 13 | TV | Output valid from clock low | —<br>—<br>— | 50<br>100<br>160 | ns<br>ns<br>ns | 4.5V ≤ Vcc ≤ 5.5V<br>2.5V ≤ Vcc < 4.5V<br>1.8V ≤ Vcc < 2.5V |
| 14 | THO | Output hold time | 0 | — | ns | **(Note 1)** |
| 15 | TDIS | Output disable time | —<br>—<br>— | 40<br>80<br>160 | ns<br>ns<br>ns | 4.5V ≤ Vcc ≤ 5.5V **(Note 1)**<br>2.5V ≤ Vcc ≤ 4.5V **(Note 1)**<br>1.8V ≤ Vcc ≤ 2.5V **(Note 1)** |
| 16 | THS | $\overline{HOLD}$ setup time | 20<br>40<br>80 | —<br>—<br>— | ns<br>ns<br>ns | 4.5V ≤ Vcc ≤ 5.5V<br>2.5V ≤ Vcc < 4.5V<br>1.8V ≤ Vcc < 2.5V |

**Note 1:** This parameter is periodically sampled and not 100% tested.

**2:** This parameter is not tested but ensured by characterization. For endurance estimates in a specific application, please consult the Total Endurance™ Model which can be obtained from Microchip's web site at www.microchip.com.

**3:** TWC begins on the rising edge of $\overline{CS}$ after a valid write sequence and ends when the internal write cycle is complete.

**TABLE 1-2: AC CHARACTERISTICS (CONTINUED)**

| AC CHARACTERISTICS | | | Industrial (I): TA = -40°C to +85°C VCC = 1.8V to 5.5V<br>Automotive (E): TA = -40°C to +125°C VCC = 1.8V to 5.5V | | | |
|---|---|---|---|---|---|---|
| **Param. No.** | **Sym.** | **Characteristic** | **Min.** | **Max.** | **Units** | **Test Conditions** |
| 17 | THH | $\overline{\text{HOLD}}$ hold time | 20<br>40<br>80 | —<br>—<br>— | ns<br>ns<br>ns | 4.5V ≤ Vcc ≤ 5.5V<br>2.5V ≤ Vcc < 4.5V<br>1.8V ≤ Vcc < 2.5V |
| 18 | THZ | $\overline{\text{HOLD}}$ low to output High-Z | 30<br>60<br>160 | —<br>—<br>— | ns<br>ns<br>ns | 4.5V ≤ Vcc ≤ 5.5V **(Note 1)**<br>2.5V ≤ Vcc < 4.5V **(Note 1)**<br>1.8V ≤ Vcc < 2.5V **(Note 1)** |
| 19 | THV | $\overline{\text{HOLD}}$ high to output valid | 30<br>60<br>160 | —<br>—<br>— | ns<br>ns<br>ns | 4.5V ≤ Vcc ≤ 5.5V<br>2.5V ≤ Vcc < 4.5V<br>1.8V ≤ Vcc < 2.5V |
| 20 | TWC | Internal write cycle time | — | 5 | ms | **(Note 3)** |
| 21 | — | Endurance | 1M | — | E/W Cycles | 25°C, VCC = 5.5V **(Note 2)** |

**Note 1:** This parameter is periodically sampled and not 100% tested.

**2:** This parameter is not tested but ensured by characterization. For endurance estimates in a specific application, please consult the Total Endurance™ Model which can be obtained from Microchip's web site at www.microchip.com.

**3:** TWC begins on the rising edge of $\overline{\text{CS}}$ after a valid write sequence and ends when the internal write cycle is complete.

**TABLE 1-3: AC TEST CONDITIONS**

| **AC Waveform:** | |
|---|---|
| VLO = 0.2V | — |
| VHI = VCC - 0.2V | **(Note 1)** |
| VHI = 4.0V | **(Note 2)** |
| CL = 100 pF | **—** |
| **Timing Measurement Reference Level** | |
| Input | 0.5 VCC |
| Output | 0.5 VCC |

**Note 1:** For VCC ≤ 4.0V.

**2:** For VCC > 4.0V.


© 2003-2013 Microchip Technology Inc.

**FIGURE 1-1: HOLD TIMING**

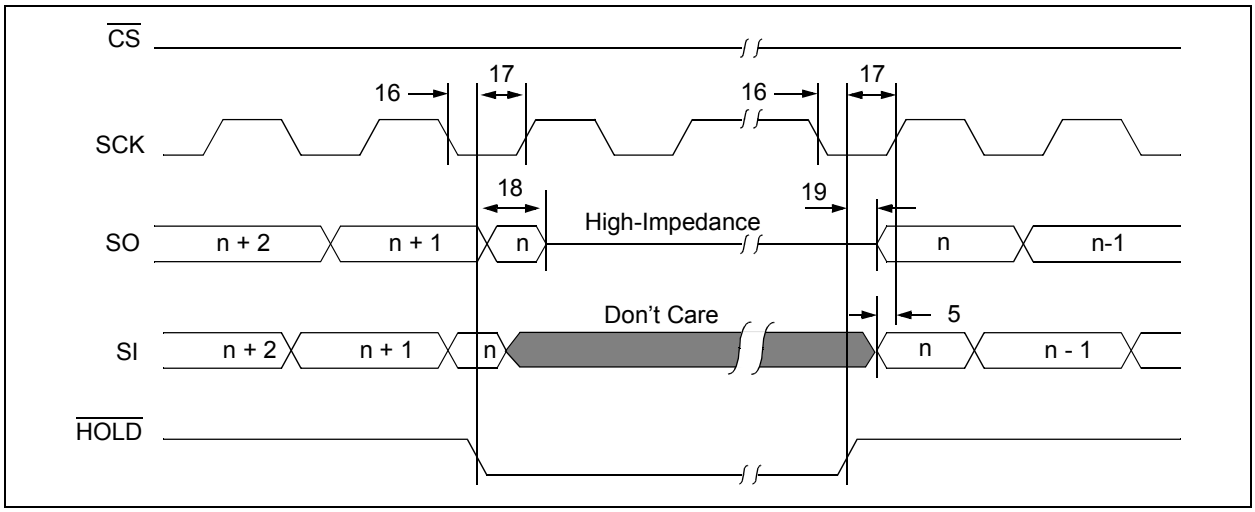


**FIGURE 1-2: SERIAL INPUT TIMING**

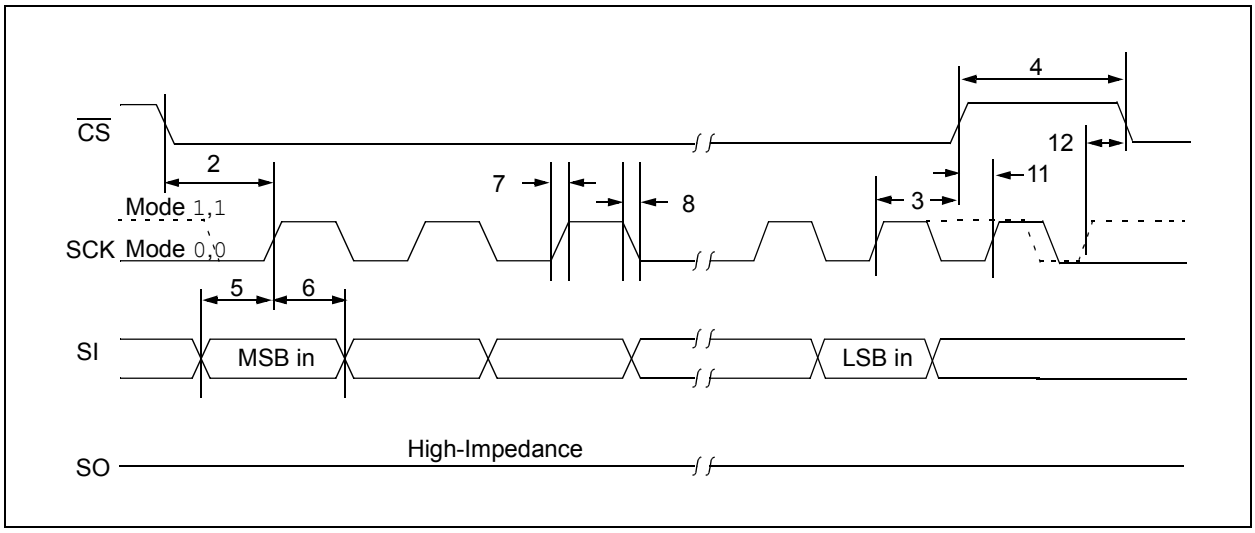


**FIGURE 1-3: SERIAL OUTPUT TIMING**

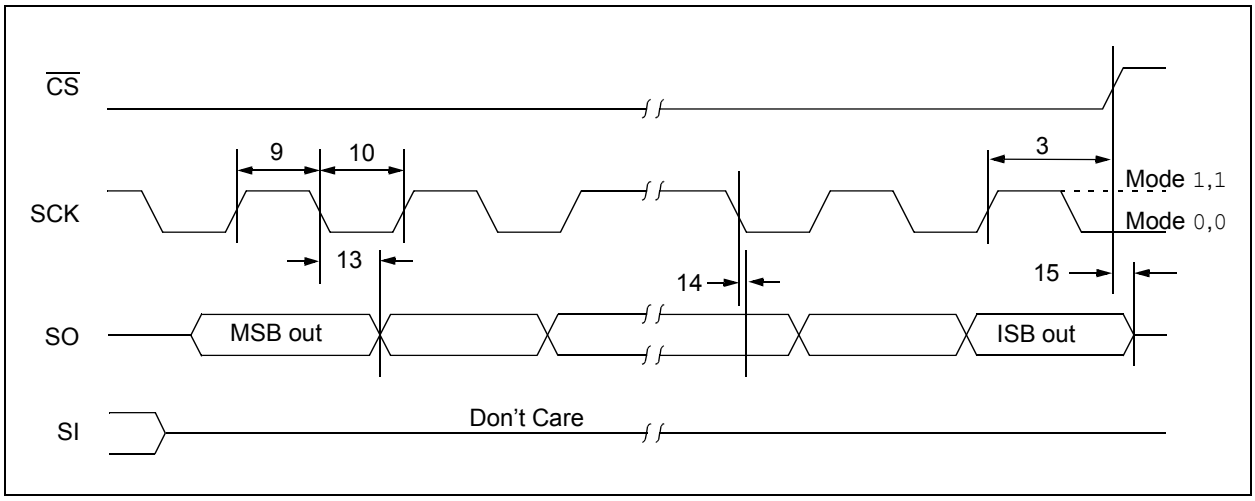

# 2.0 FUNCTIONAL DESCRIPTION

## 2.1 Principles of Operation

The 25XX640A is a 8192-byte serial EEPROM designed to interface directly with the Serial Peripheral Interface (SPI) port of many of today's popular microcontroller families, including Microchip's PIC® microcontrollers. It may also interface with microcontrollers that do not have a built-in SPI port by using discrete I/O lines programmed properly in firmware to match the SPI protocol.

The 25XX640A contains an 8-bit instruction register. The device is accessed via the SI pin, with data being clocked in on the rising edge of SCK. The $\overline{CS}$ pin must be low and the $\overline{HOLD}$ pin must be high for the entire operation.

Table 2-1 contains a list of the possible instruction bytes and format for device operation. All instructions, addresses and data are transferred Most Significant Byte (MSB) first, Least Significant Byte (LSB) last.

Data (SI) is sampled on the first rising edge of SCK after $\overline{CS}$ goes low. If the clock line is shared with other peripheral devices on the SPI bus, the user can assert the $\overline{HOLD}$ input and place the 25XX640A in 'HOLD' mode. After releasing the $\overline{HOLD}$ pin, operation will resume from the point when the $\overline{HOLD}$ was asserted.

## 2.2 Read Sequence

The device is selected by pulling $\overline{CS}$ low. The 8-bit `READ` instruction is transmitted to the 25XX640A followed by the 16-bit address, with the three MSBs of the address being "don't care" bits. After the correct `READ` instruction and address are sent, the data stored in the memory at the selected address is shifted out on the SO pin. The data stored in the memory at the next address can be read sequentially by continuing to provide clock pulses. The internal Address Pointer is automatically incremented to the next higher address after each byte of data is shifted out. When the highest address is reached (1FFFh), the address counter rolls over to address 0000h, allowing the read cycle to be continued indefinitely. The read operation is terminated by raising the $\overline{CS}$ pin (Figure 2-1).

## 2.3 Write Sequence

Prior to any attempt to write data to the 25XX640A, the write enable latch must be set by issuing the `WREN` instruction (Figure 2-4). This is done by setting $\overline{CS}$ low and then clocking out the proper instruction into the 25XX640A. After all eight bits of the instruction are transmitted, the $\overline{CS}$ must be brought high to set the write enable latch. If the write operation is initiated immediately after the `WREN` instruction without $\overline{CS}$ being brought high, the data will not be written to the array because the write enable latch will not have been properly set.

Once the write enable latch is set, the user may proceed by setting the $\overline{CS}$ low, issuing a `WRITE` instruction, followed by the 16-bit address, with the three MSBs of the address being "don't care" bits, and then the data to be written. Up to 32 bytes of data can be sent to the device before a write cycle is necessary. The only restriction is that all of the bytes must reside in the same page.

> **Note:** Page write operations are limited to writing bytes within a single physical page, **regardless** of the number of bytes actually being written. Physical page boundaries start at addresses that are integer multiples of the page buffer size (or 'page size') and, end at addresses that are integer multiples of page size – 1. If a Page Write command attempts to write across a physical page boundary, the result is that the data wraps around to the beginning of the current page (overwriting data previously stored there), instead of being written to the next page as might be expected. It is therefore necessary for the application software to prevent page write operations that would attempt to cross a page boundary.

For the data to be actually written to the array, the $\overline{CS}$ must be brought high after the Least Significant bit (D0) of the $n^{th}$ data byte has been clocked in. If $\overline{CS}$ is brought high at any other time, the write operation will not be completed. Refer to Figure 2-2 and Figure 2-3 for more detailed illustrations on the byte write sequence and the page write sequence, respectively. While the write is in progress, the STATUS register may be read to check the status of the WPEN, WIP, WEL, BP1 and BP0 bits (Figure 2-6). A read attempt of a memory array location will not be possible during a write cycle. When the write cycle is completed, the write enable latch is reset.


© 2003-2013 Microchip Technology Inc.

## BLOCK DIAGRAM

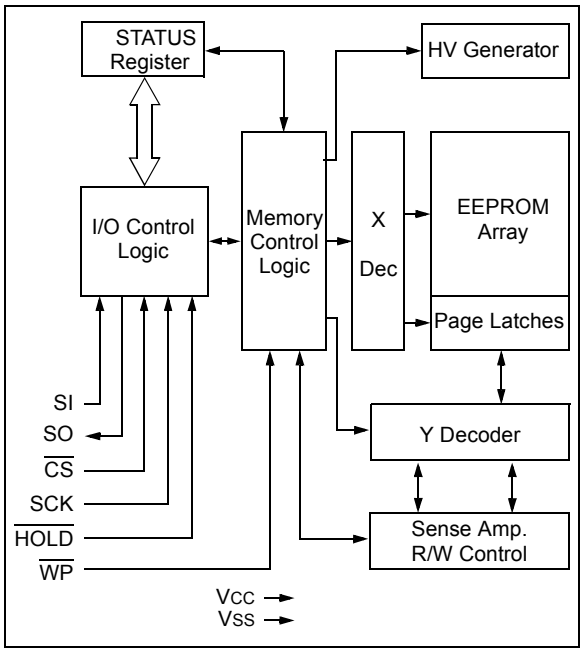


**TABLE 2-1: INSTRUCTION SET**

| Instruction Name | Instruction Format | Description |
|---|---|---|
| READ | 0000 0011 | Read data from memory array beginning at selected address |
| WRITE | 0000 0010 | Write data to memory array beginning at selected address |
| WRDI | 0000 0100 | Reset the write enable latch (disable write operations) |
| WREN | 0000 0110 | Set the write enable latch (enable write operations) |
| RDSR | 0000 0101 | Read STATUS register |
| WRSR | 0000 0001 | Write STATUS register |

**FIGURE 2-1: READ SEQUENCE**

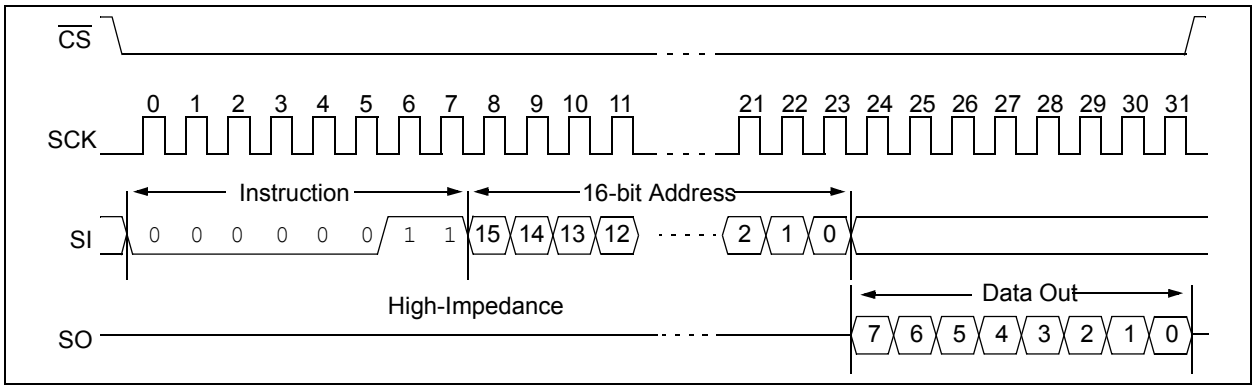

**FIGURE 2-2: BYTE WRITE SEQUENCE**

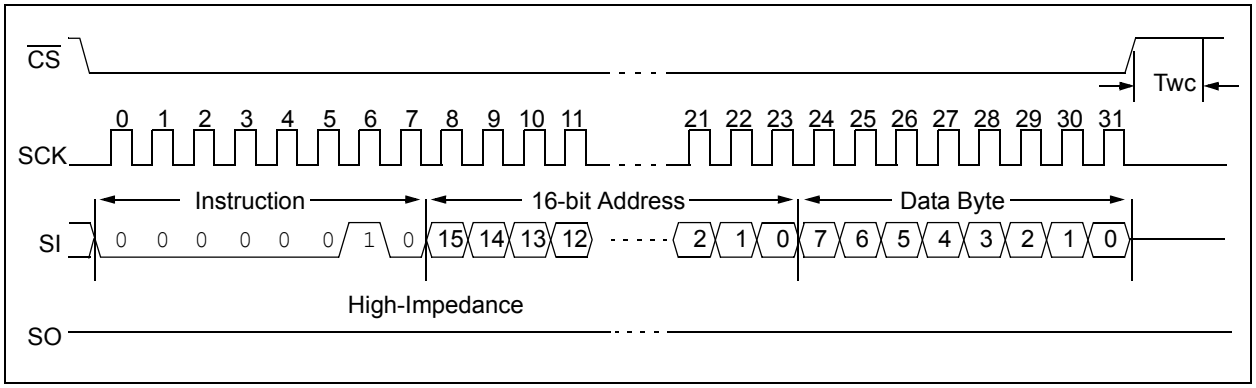


**FIGURE 2-3: PAGE WRITE SEQUENCE**

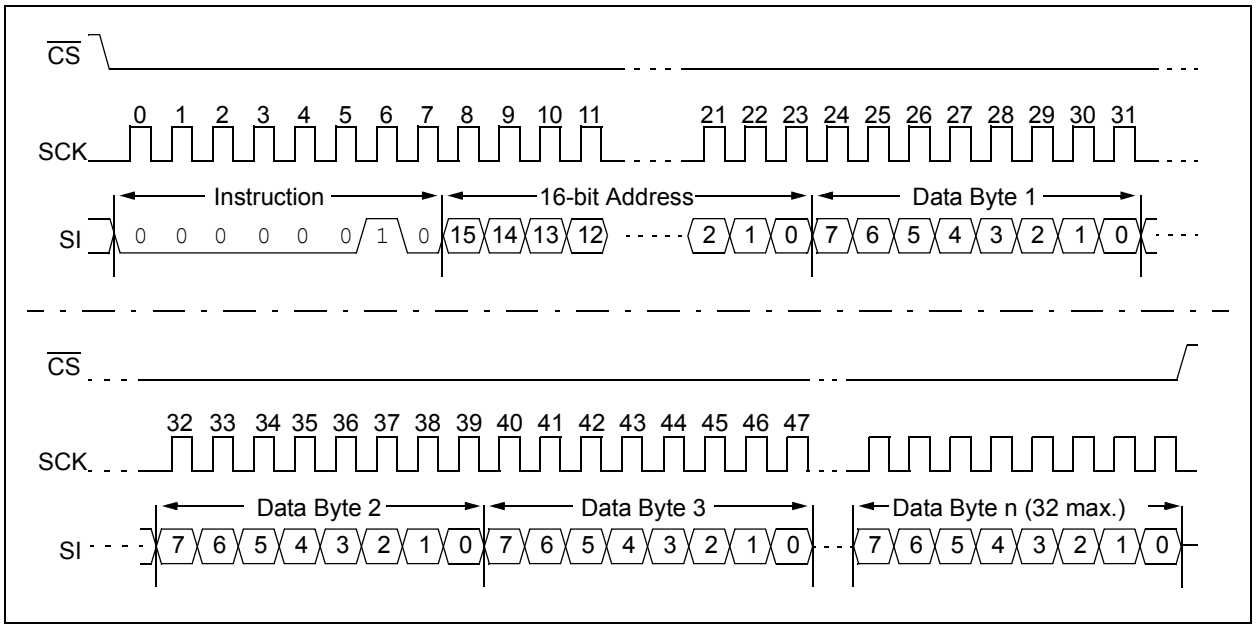



© 2003-2013 Microchip Technology Inc.

## 2.4 Write Enable (WREN) and Write Disable (WRDI)

The 25XX640A contains a write enable latch. See Table 2-4 for the Write-Protect Functionality Matrix. This latch must be set before any write operation will be completed internally. The WREN instruction will set the latch and the WRDI will reset the latch.

The following is a list of conditions under which the write enable latch will be reset:

- Power-up
- WRDI instruction successfully executed
- WRSR instruction successfully executed
- WRITE instruction successfully executed

**FIGURE 2-4: WRITE ENABLE SEQUENCE (WREN)**

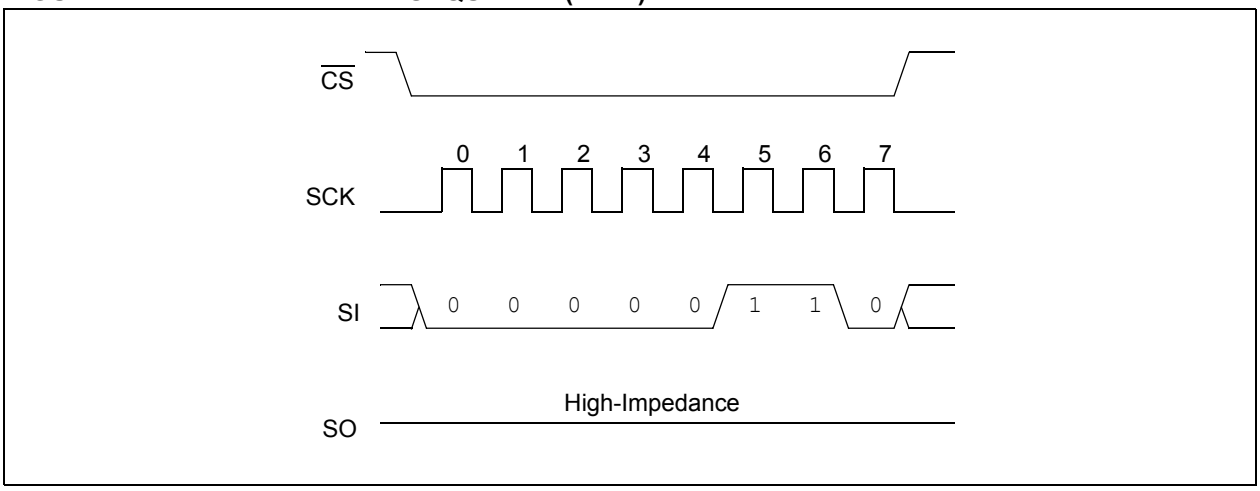


**FIGURE 2-5: WRITE DISABLE SEQUENCE (WRDI)**

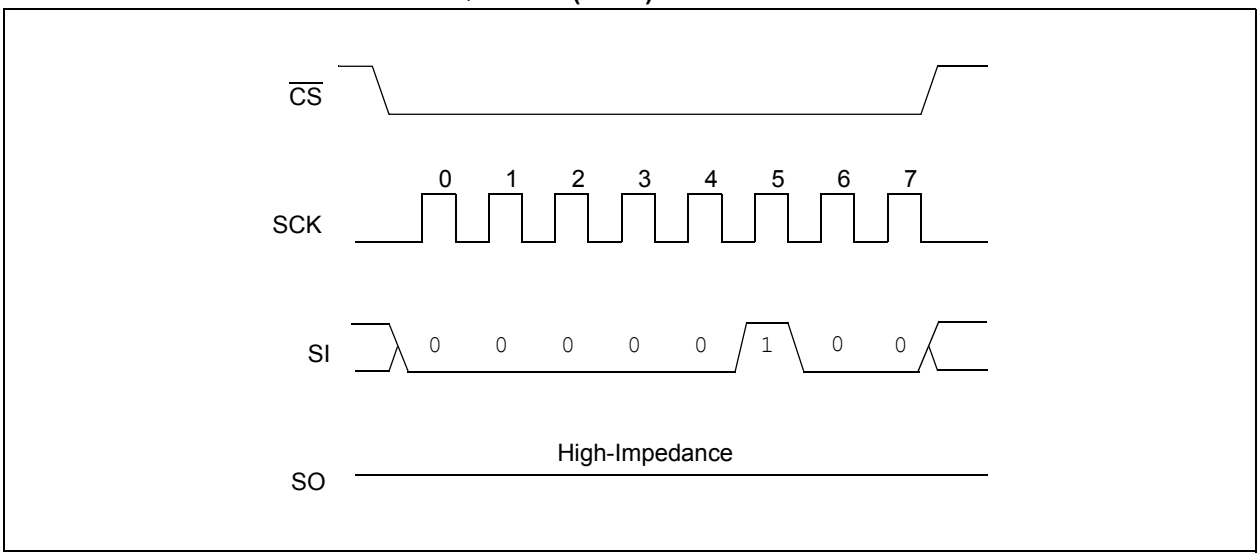

## 2.5 Read Status Register Instruction (RDSR)

The Read Status Register instruction (RDSR) provides access to the STATUS register. The STATUS register may be read at any time, even during a write cycle. The STATUS register is formatted as follows:

**TABLE 2-2: STATUS REGISTER**

| 7 | 6 | 5 | 4 | 3 | 2 | 1 | 0 |
|---|---|---|---|---|---|---|---|
| W/R | – | – | – | W/R | W/R | R | R |
| WPEN | X | X | X | BP1 | BP0 | WEL | WIP |
| W/R = writable/readable. R = read-only. | | | | | | | |

The **Write-In-Process (WIP)** bit indicates whether the 25XX640A is busy with a write operation. When set to a '1', a write is in progress, when set to a '0', no write is in progress. This bit is read-only.

The **Write Enable Latch (WEL)** bit indicates the status of the write enable latch and is read-only. When set to a '1', the latch allows writes to the array, when set to a '0', the latch prohibits writes to the array. The state of this bit can always be updated via the WREN or WRDI commands regardless of the state of write protection on the STATUS register. These commands are shown in Figure 2-4 and Figure 2-5.

The **Block Protection (BP0 and BP1)** bits indicate which blocks are currently write-protected. These bits are set by the user issuing the WRSR instruction. These bits are nonvolatile, and are shown in Table 2-3.

See Figure 2-6 for the RDSR timing sequence.

The STATUS register can be continually read until the $\overline{CS}$ is de-asserted.

**FIGURE 2-6: READ STATUS REGISTER TIMING SEQUENCE (RDSR)**

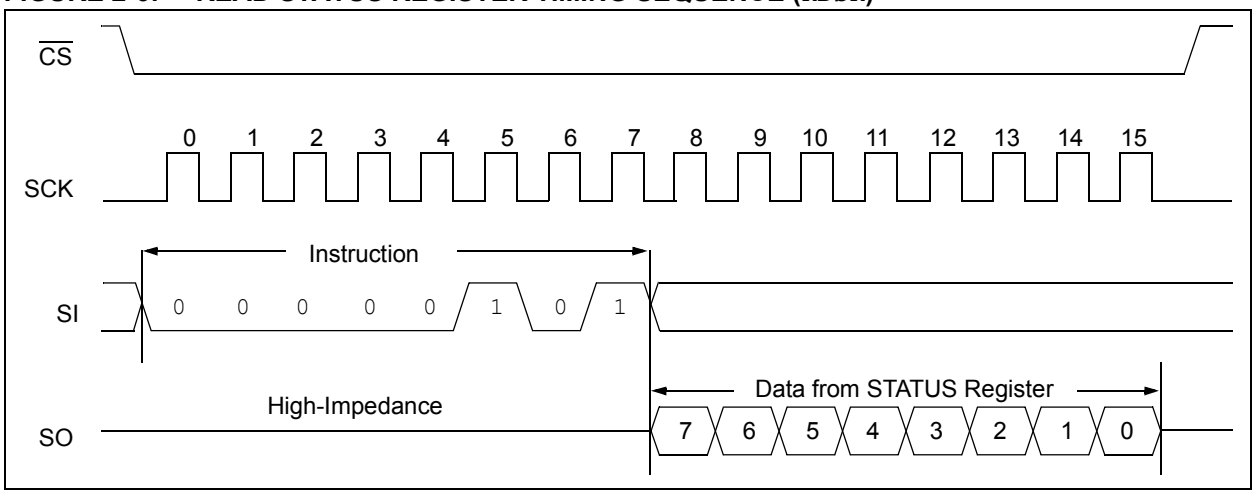



© 2003-2013 Microchip Technology Inc.

## 2.6 Write Status Register Instruction (WRSR)

The Write Status Register instruction (WRSR) allows the user to write to the nonvolatile bits in the STATUS register as shown in Table 2-2. The user is able to select one of four levels of protection for the array by writing to the appropriate bits in the STATUS register. The array is divided up into four segments. The user has the ability to write-protect none, one, two, or all four of the segments of the array. The partitioning is controlled as shown in Table 2-3.

The Write-Protect Enable (WPEN) bit is a nonvolatile bit that is available as an enable bit for the $\overline{WP}$ pin. The Write-Protect ($\overline{WP}$) pin and the Write-Protect Enable (WPEN) bit in the STATUS register control the programmable hardware write-protect feature. Hardware write protection is enabled when $\overline{WP}$ pin is low and the WPEN bit is high. Hardware write protection is disabled when either the $\overline{WP}$ pin is high or the WPEN bit is low. When the chip is hardware write-protected, only writes to nonvolatile bits in the STATUS register are disabled. See Table 2-4 for a matrix of functionality on the WPEN bit.

See Figure 2-7 for the WRSR timing sequence.

**TABLE 2-3: ARRAY PROTECTION**

| BP1 | BP0 | Array Addresses Write-Protected |
|---|---|---|
| 0 | 0 | none |
| 0 | 1 | upper 1/4 (1800h-1FFFh) |
| 1 | 0 | upper 1/2 (1000h-1FFFh) |
| 1 | 1 | all (0000h-1FFFh) |

**FIGURE 2-7: WRITE STATUS REGISTER TIMING SEQUENCE (WRSR)**

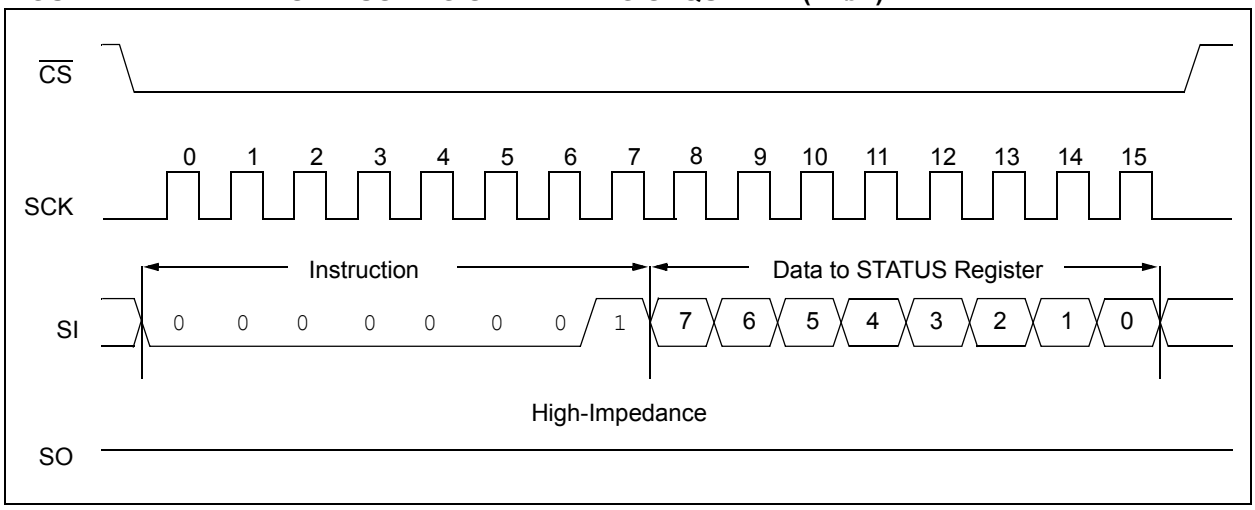


**Note:** An internal write cycle (TWC) is initiated on the rising edge of $\overline{CS}$ after a valid write STATUS register sequence.

## 2.7 Data Protection

The following protection has been implemented to prevent inadvertent writes to the array:

- The write enable latch is reset on power-up
- A write enable instruction must be issued to set the write enable latch
- After a byte write, page write or STATUS register write, the write enable latch is reset
- $\overline{CS}$ must be set high after the proper number of clock cycles to start an internal write cycle
- Access to the array during an internal write cycle is ignored and programming is continued

## 2.8 Power-On State

The 25XX640A powers on in the following state:

- The device is in low-power Standby mode ($\overline{CS}$ = 1)
- The write enable latch is reset
- SO is in high-impedance state
- A high-to-low-level transition on $\overline{CS}$ is required to enter active state

**TABLE 2-4: WRITE-PROTECT FUNCTIONALITY MATRIX**

| WEL (SR bit 1) | WPEN (SR bit 7) | $\overline{WP}$ (pin 3) | Protected Blocks | Unprotected Blocks | STATUS Register |
|---|---|---|---|---|---|
| 0 | x | x | Protected | Protected | Protected |
| 1 | 0 | x | Protected | Writable | Writable |
| 1 | 1 | 0 (low) | Protected | Writable | Protected |
| 1 | 1 | 1 (high) | Protected | Writable | Writable |

x = don’t care


© 2003-2013 Microchip Technology Inc.

## 3.0 PIN DESCRIPTIONS

The descriptions of the pins are listed in Table 3-1.

**TABLE 3-1: PIN FUNCTION TABLE**

| Name | Pin Number | X-Rotated Pin Number | Function |
|---|---|---|---|
| $\overline{CS}$ | 1 | 3 | Chip Select Input |
| SO | 2 | 4 | Serial Data Output |
| $\overline{WP}$ | 3 | 5 | Write-Protect Pin |
| VSS | 4 | 6 | Ground |
| SI | 5 | 7 | Serial Data Input |
| SCK | 6 | 8 | Serial Clock Input |
| $\overline{HOLD}$ | 7 | 1 | Hold Input |
| VCC | 8 | 2 | Supply Voltage |

### 3.1 Chip Select ($\overline{CS}$)

A low level on this pin selects the device. A high level deselects the device and forces it into Standby mode. However, a programming cycle which is already initiated or in progress will be completed, regardless of the $\overline{CS}$ input signal. If $\overline{CS}$ is brought high during a program cycle, the device will go into Standby mode as soon as the programming cycle is complete. When the device is deselected, SO goes to the high-impedance state, allowing multiple parts to share the same SPI bus. A low-to-high transition on $\overline{CS}$ after a valid write sequence initiates an internal write cycle. After power-up, a low level on $\overline{CS}$ is required prior to any sequence being initiated.

### 3.2 Serial Output (SO)

The SO pin is used to transfer data out of the 25XX640A. During a read cycle, data is shifted out on this pin after the falling edge of the serial clock.

### 3.3 Write-Protect ($\overline{WP}$)

This pin is used in conjunction with the WPEN bit in the STATUS register to prohibit writes to the nonvolatile bits in the STATUS register. When $\overline{WP}$ is low and WPEN is high, writing to the nonvolatile bits in the STATUS register is disabled. All other operations function normally. When $\overline{WP}$ is high, all functions, including writes to the nonvolatile bits in the STATUS register operate normally. If the WPEN bit is set, $\overline{WP}$ low during a STATUS register write sequence will disable writing to the STATUS register. If an internal write cycle has already begun, $\overline{WP}$ going low will have no effect on the write.

The $\overline{WP}$ pin function is blocked when the WPEN bit in the STATUS register is low. This allows the user to install the 25XX640A in a system with $\overline{WP}$ pin grounded and still be able to write to the STATUS register. The $\overline{WP}$ pin functions will be enabled when the WPEN bit is set high.

### 3.4 Serial Input (SI)

The SI pin is used to transfer data into the device. It receives instructions, addresses and data. Data is latched on the rising edge of the serial clock.

### 3.5 Serial Clock (SCK)

The SCK is used to synchronize the communication between a master and the 25XX640A. Instructions, addresses or data present on the SI pin are latched on the rising edge of the clock input, while data on the SO pin is updated after the falling edge of the clock input.

### 3.6 Hold ($\overline{HOLD}$)

The $\overline{HOLD}$ pin is used to suspend transmission to the 25XX640A while in the middle of a serial sequence without having to retransmit the entire sequence again. It must be held high any time this function is not being used. Once the device is selected and a serial sequence is underway, the $\overline{HOLD}$ pin may be pulled low to pause further serial communication without resetting the serial sequence. The $\overline{HOLD}$ pin must be brought low while SCK is low, otherwise the HOLD function will not be invoked until the next SCK high-to-low transition. The 25XX640A must remain selected during this sequence. The SI, SCK and SO pins are in a high-impedance state during the time the device is paused and transitions on these pins will be ignored. To resume serial communication, $\overline{HOLD}$ must be brought high while the SCK pin is low, otherwise serial communication will not resume. Lowering the HOLD line at any time will tri-state the SO line.

## 4.0 PACKAGING INFORMATION

### 4.1 Package Marking Information

8-Lead DFN-S (5x6x1 mm)

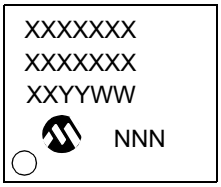


Example:

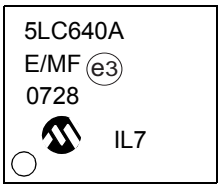


8-Lead MSOP (150 mil)

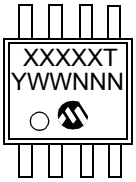


Example:

8-Lead PDIP

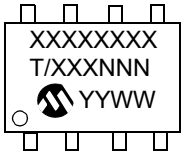


Example:

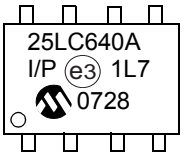


8-Lead SOIC

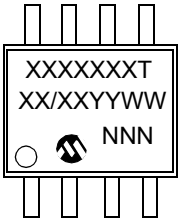


Example:

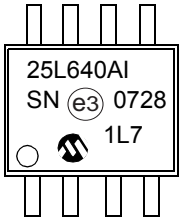


8-Lead TSSOP

Example:

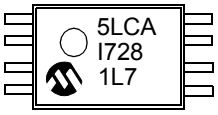


8-Lead 2x3 TDFN

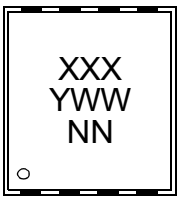


Example:

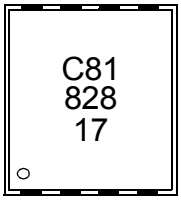



© 2003-2013 Microchip Technology Inc.

| Part Number | 1st Line Marking Codes | | | | |
|---|---|---|---|---|---|
| | TSSOP | Rotated TSSOP | MSOP | TDFN | |
| | | | | I Temp. | E Temp. |
| 25AA640A | 5ACA | ACAX | 5ACAT | C81 | EG2 |
| 25LC640A | 5LCA | LCAX | 5LCAT | C84 | C85 |
| **Note:** T = Temperature grade (I, E). | | | | | |

**Legend:**

| | |
|---|---|
| XX...X | Part number or part number code |
| T | Temperature (I, E) |
| Y | Year code (last digit of calendar year) |
| YY | Year code (last 2 digits of calendar year) |
| WW | Week code (week of January 1 is week ‘01’) |
| NNN | Alphanumeric traceability code (2 characters for small packages) |
| e3 | Pb-free JEDEC designator for Matte Tin (Sn) |

**Note**: For very small packages with no room for the Pb-free JEDEC designator e3, the marking will only appear on the outer carton or reel label.

**Note**: In the event the full Microchip part number cannot be marked on one line, it will be carried over to the next line, thus limiting the number of available characters for customer-specific information.

## 8-Lead Plastic Dual Flat, No Lead Package (MF) – 6x5 mm Body [DFN-S] PUNCH SINGULATED

**Note:** For the most current package drawings, please see the Microchip Packaging Specification located at http://www.microchip.com/packaging

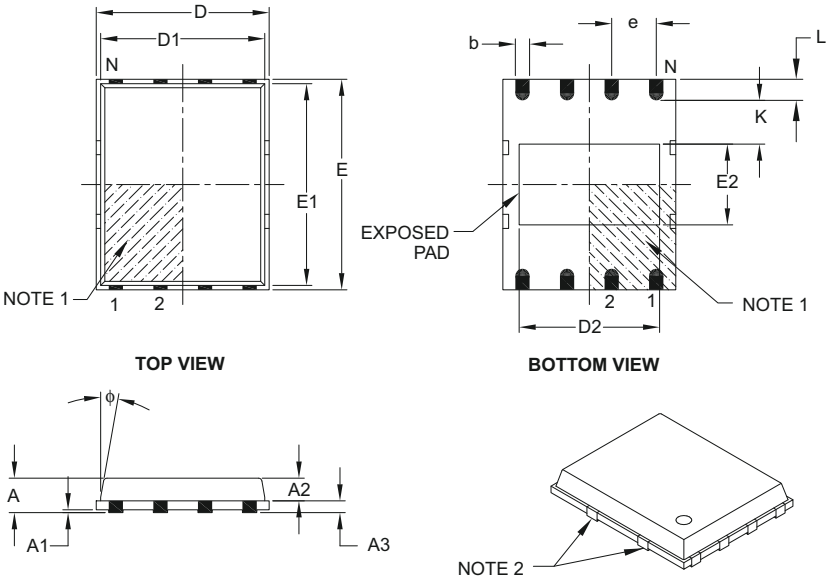


| Units | | MILLIMETERS | | |
|---|---|---|---|---|
| Dimension Limits | | MIN | NOM | MAX |
| Number of Pins | N | 8 | | |
| Pitch | e | 1.27 BSC | | |
| Overall Height | A | – | 0.85 | 1.00 |
| Molded Package Thickness | A2 | – | 0.65 | 0.80 |
| Standoff | A1 | 0.00 | 0.01 | 0.05 |
| Base Thickness | A3 | 0.20 REF | | |
| Overall Length | D | 4.92 BSC | | |
| Molded Package Length | D1 | 4.67 BSC | | |
| Exposed Pad Length | D2 | 3.85 | 4.00 | 4.15 |
| Overall Width | E | 5.99 BSC | | |
| Molded Package Width | E1 | 5.74 BSC | | |
| Exposed Pad Width | E2 | 2.16 | 2.31 | 2.46 |
| Contact Width | b | 0.35 | 0.40 | 0.47 |
| Contact Length | L | 0.50 | 0.60 | 0.75 |
| Contact-to-Exposed Pad | K | 0.20 | – | – |
| Model Draft Angle Top | ϕ | – | – | 12° |

**Notes:**

1. Pin 1 visual index feature may vary, but must be located within the hatched area.
2. Package may have one or more exposed tie bars at ends.
3. Dimensioning and tolerancing per ASME Y14.5M.
   BSC: Basic Dimension. Theoretically exact value shown without tolerances.
   REF: Reference Dimension, usually without tolerance, for information purposes only.

Microchip Technology Drawing C04-113B


© 2003-2013 Microchip Technology Inc.

## 8-Lead Plastic Micro Small Outline Package (MS) [MSOP]

**Note:** For the most current package drawings, please see the Microchip Packaging Specification located at http://www.microchip.com/packaging

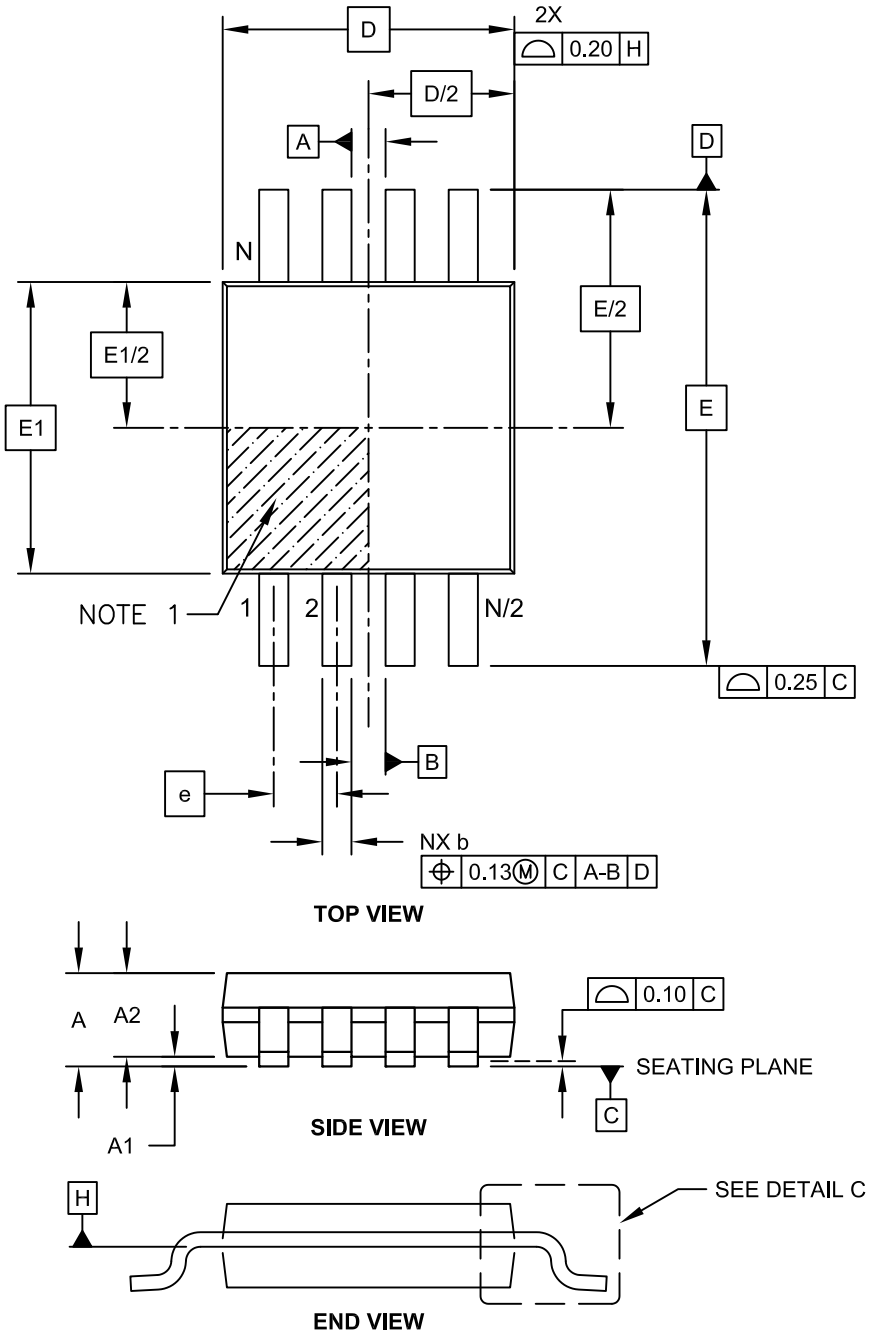


Microchip Technology Drawing C04-111C Sheet 1 of 2

## 8-Lead Plastic Micro Small Outline Package (MS) [MSOP]

**Note:** For the most current package drawings, please see the Microchip Packaging Specification located at http://www.microchip.com/packaging

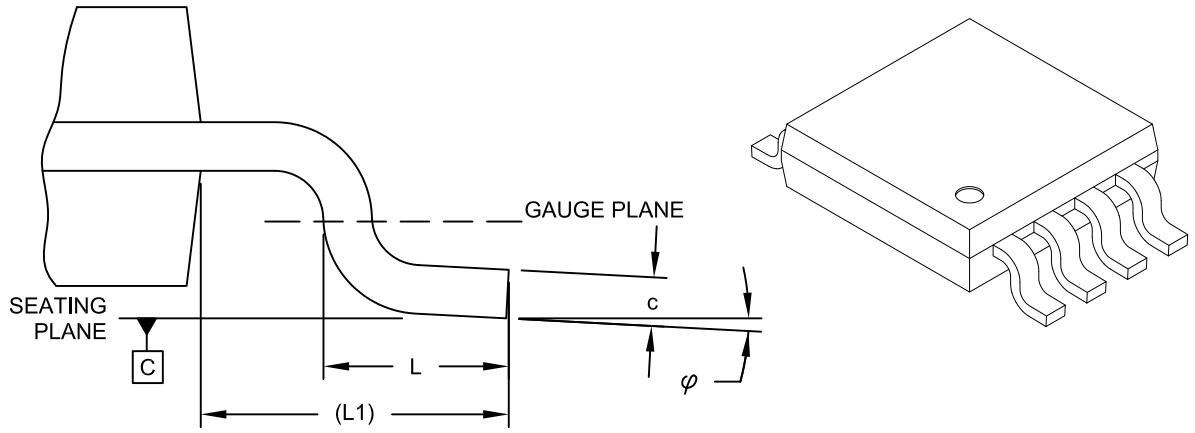


**DETAIL C**

| Units | | MILLIMETERS | | |
|---|---|---|---|---|
| Dimension Limits | | MIN | NOM | MAX |
| Number of Pins | N | | 8 | |
| Pitch | e | | 0.65 BSC | |
| Overall Height | A | - | - | 1.10 |
| Molded Package Thickness | A2 | 0.75 | 0.85 | 0.95 |
| Standoff | A1 | 0.00 | - | 0.15 |
| Overall Width | E | | 4.90 BSC | |
| Molded Package Width | E1 | | 3.00 BSC | |
| Overall Length | D | | 3.00 BSC | |
| Foot Length | L | 0.40 | 0.60 | 0.80 |
| Footprint | L1 | | 0.95 REF | |
| Foot Angle | φ | 0° | - | 8° |
| Lead Thickness | c | 0.08 | - | 0.23 |
| Lead Width | b | 0.22 | - | 0.40 |

**Notes:**

1. Pin 1 visual index feature may vary, but must be located within the hatched area.
2. Dimensions D and E1 do not include mold flash or protrusions. Mold flash or protrusions shall not exceed 0.15mm per side.
3. Dimensioning and tolerancing per ASME Y14.5M.
   BSC: Basic Dimension. Theoretically exact value shown without tolerances.
   REF: Reference Dimension, usually without tolerance, for information purposes only.

Microchip Technology Drawing C04-111C Sheet 2 of 2


© 2003-2013 Microchip Technology Inc.

8-Lead Plastic Micro Small Outline Package (MS) [MSOP]

**Note:** For the most current package drawings, please see the Microchip Packaging Specification located at http://www.microchip.com/packaging

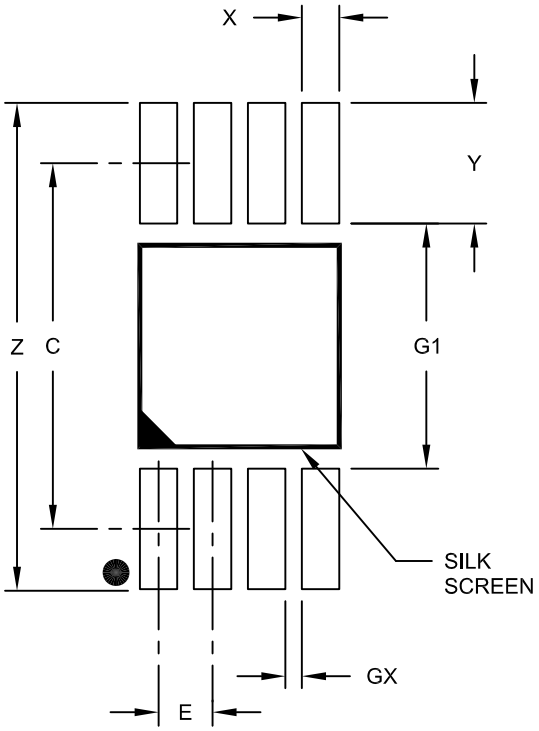


RECOMMENDED LAND PATTERN

| Units | | MILLIMETERS | | |
|---|---|---|---|---|
| Dimension Limits | | MIN | NOM | MAX |
| Contact Pitch | E | 0.65 BSC | | |
| Contact Pad Spacing | C | | 4.40 | |
| Overall Width | Z | | | 5.85 |
| Contact Pad Width (X8) | X1 | | | 0.45 |
| Contact Pad Length (X8) | Y1 | | | 1.45 |
| Distance Between Pads | G1 | 2.95 | | |
| Distance Between Pads | GX | 0.20 | | |

Notes:

1. Dimensioning and tolerancing per ASME Y14.5M
   BSC: Basic Dimension. Theoretically exact value shown without tolerances.

Microchip Technology Drawing No. C04-2111A

## 8-Lead Plastic Dual In-Line (P) – 300 mil Body [PDIP]

**Note:** For the most current package drawings, please see the Microchip Packaging Specification located at http://www.microchip.com/packaging

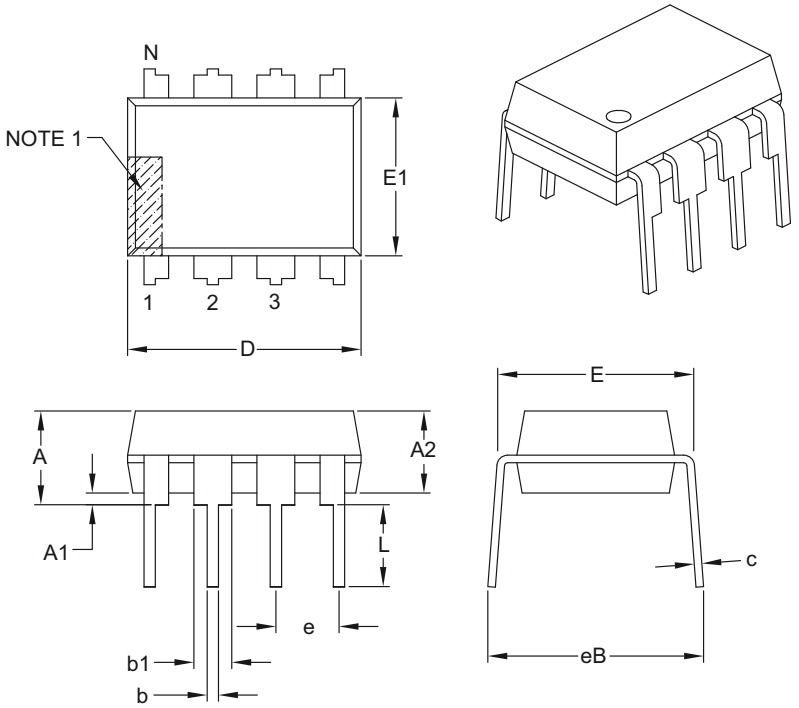


| Units | | INCHES | | |
|---|---|---|---|---|
| Dimension Limits | | MIN | NOM | MAX |
| Number of Pins | N | 8 | | |
| Pitch | e | .100 BSC | | |
| Top to Seating Plane | A | – | – | .210 |
| Molded Package Thickness | A2 | .115 | .130 | .195 |
| Base to Seating Plane | A1 | .015 | – | – |
| Shoulder to Shoulder Width | E | .290 | .310 | .325 |
| Molded Package Width | E1 | .240 | .250 | .280 |
| Overall Length | D | .348 | .365 | .400 |
| Tip to Seating Plane | L | .115 | .130 | .150 |
| Lead Thickness | c | .008 | .010 | .015 |
| Upper Lead Width | b1 | .040 | .060 | .070 |
| Lower Lead Width | b | .014 | .018 | .022 |
| Overall Row Spacing § | eB | – | – | .430 |

**Notes:**

1. Pin 1 visual index feature may vary, but must be located with the hatched area.
2. § Significant Characteristic.
3. Dimensions D and E1 do not include mold flash or protrusions. Mold flash or protrusions shall not exceed .010" per side.
4. Dimensioning and tolerancing per ASME Y14.5M.
   BSC: Basic Dimension. Theoretically exact value shown without tolerances.

Microchip Technology Drawing C04-018B


© 2003-2013 Microchip Technology Inc.

### 8-Lead Plastic Small Outline (SN) - Narrow, 3.90 mm Body [SOIC]

**Note:** For the most current package drawings, please see the Microchip Packaging Specification located at http://www.microchip.com/packaging

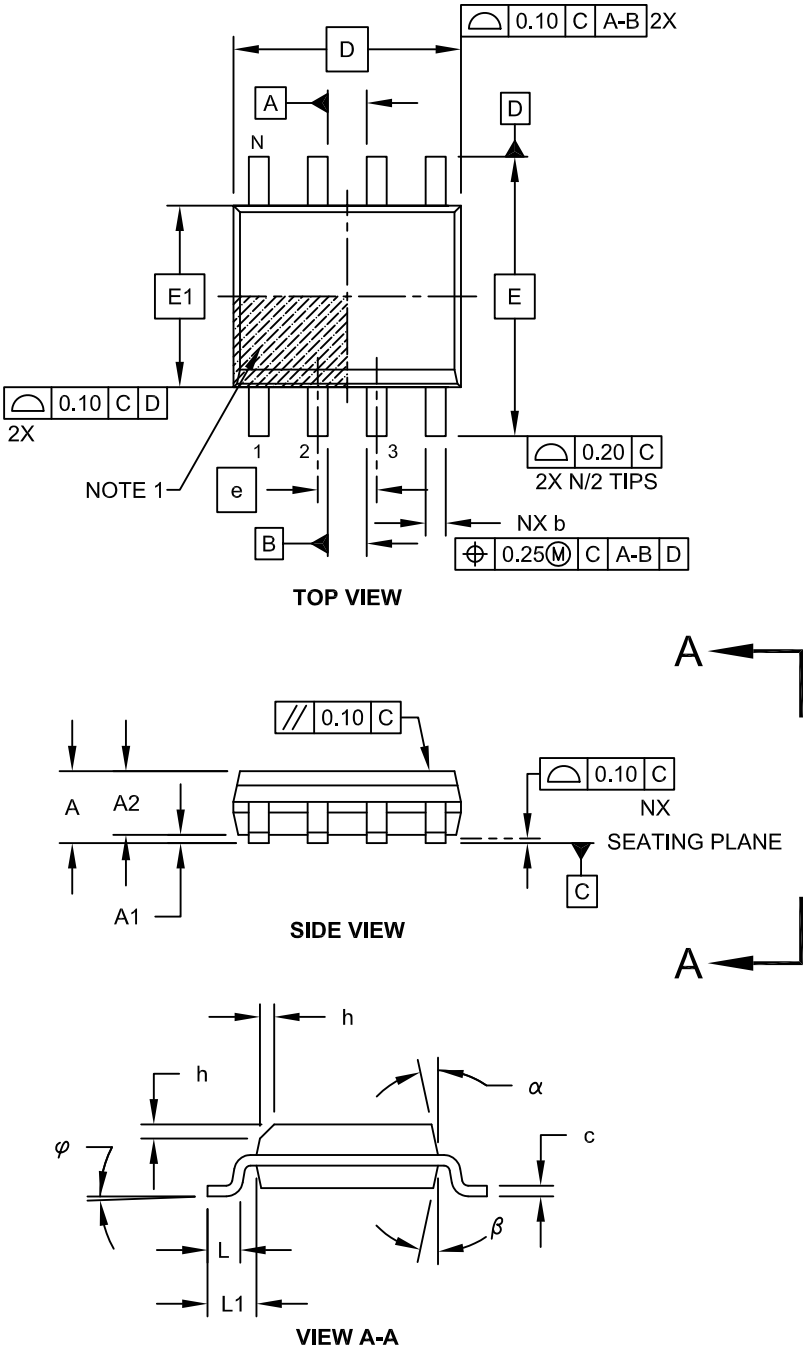


Microchip Technology Drawing No. C04-057C Sheet 1 of 2

## 8-Lead Plastic Small Outline (SN) - Narrow, 3.90 mm Body [SOIC]

**Note:** For the most current package drawings, please see the Microchip Packaging Specification located at http://www.microchip.com/packaging

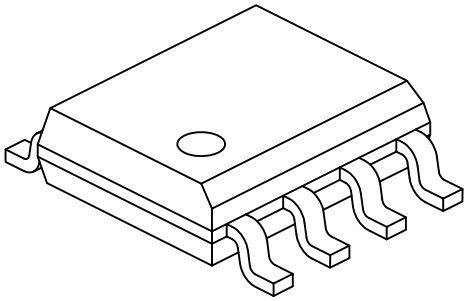

| Units | | MILLIMETERS | | |
|---|---|---|---|---|
| Dimension Limits | | MIN | NOM | MAX |
| Number of Pins | N | 8 | | |
| Pitch | e | 1.27 BSC | | |
| Overall Height | A | - | - | 1.75 |
| Molded Package Thickness | A2 | 1.25 | - | - |
| Standoff § | A1 | 0.10 | - | 0.25 |
| Overall Width | E | 6.00 BSC | | |
| Molded Package Width | E1 | 3.90 BSC | | |
| Overall Length | D | 4.90 BSC | | |
| Chamfer (Optional) | h | 0.25 | - | 0.50 |
| Foot Length | L | 0.40 | - | 1.27 |
| Footprint | L1 | 1.04 REF | | |
| Foot Angle | $\varphi$ | 0° | - | 8° |
| Lead Thickness | c | 0.17 | - | 0.25 |
| Lead Width | b | 0.31 | - | 0.51 |
| Mold Draft Angle Top | $\alpha$ | 5° | - | 15° |
| Mold Draft Angle Bottom | $\beta$ | 5° | - | 15° |

**Notes:**

1. Pin 1 visual index feature may vary, but must be located within the hatched area.
2. § Significant Characteristic
3. Dimensions D and E1 do not include mold flash or protrusions. Mold flash or protrusions shall not exceed 0.15mm per side.
4. Dimensioning and tolerancing per ASME Y14.5M

   BSC: Basic Dimension. Theoretically exact value shown without tolerances.

   REF: Reference Dimension, usually without tolerance, for information purposes only.

Microchip Technology Drawing No. C04-057C Sheet 2 of 2


© 2003-2013 Microchip Technology Inc.

### 8-Lead Plastic Small Outline (SN) – Narrow, 3.90 mm Body [SOIC]

**Note:** For the most current package drawings, please see the Microchip Packaging Specification located at http://www.microchip.com/packaging

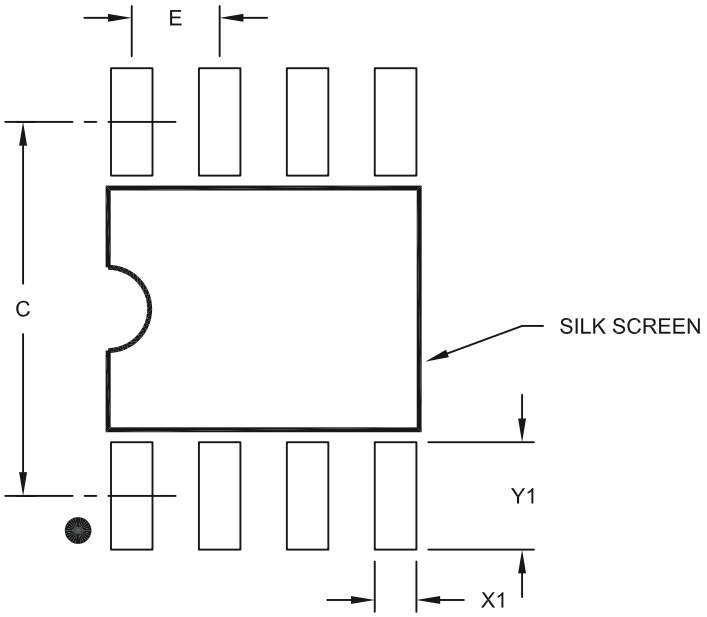


RECOMMENDED LAND PATTERN

| Units | | MILLIMETERS | | |
|---|---|---|---|---|
| Dimension Limits | | MIN | NOM | MAX |
| Contact Pitch | E | | 1.27 BSC | |
| Contact Pad Spacing | C | | 5.40 | |
| Contact Pad Width (X8) | X1 | | | 0.60 |
| Contact Pad Length (X8) | Y1 | | | 1.55 |

Notes:

1. Dimensioning and tolerancing per ASME Y14.5M
   BSC: Basic Dimension. Theoretically exact value shown without tolerances.

Microchip Technology Drawing No. C04-2057A

## 8-Lead Plastic Thin Shrink Small Outline (ST) – 4.4 mm Body [TSSOP]

**Note:** For the most current package drawings, please see the Microchip Packaging Specification located at http://www.microchip.com/packaging

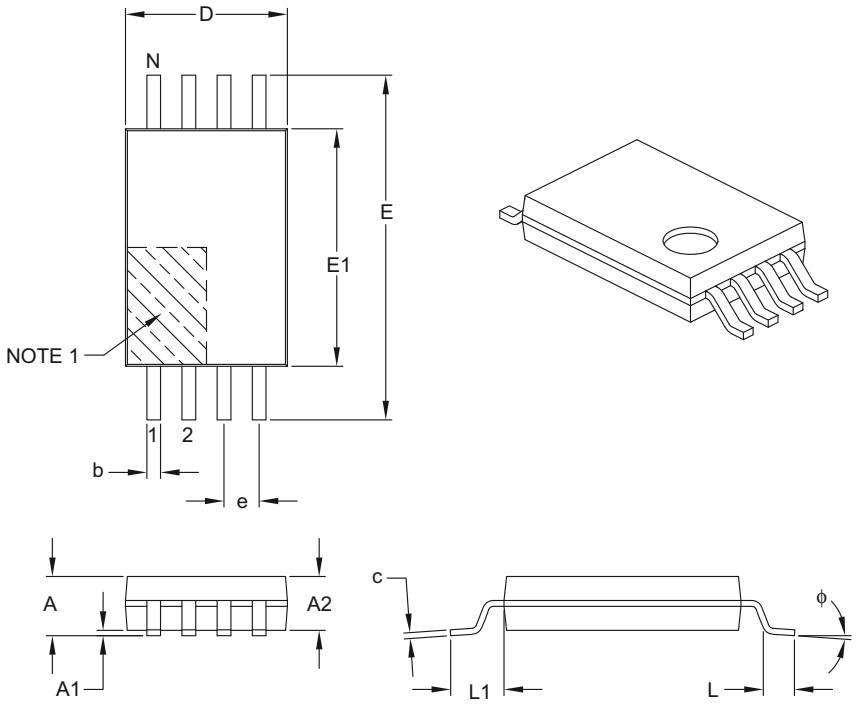


| Units | | MILLIMETERS | | |
|---|---|---|---|---|
| Dimension Limits | | MIN | NOM | MAX |
| Number of Pins | N | 8 | | |
| Pitch | e | 0.65 BSC | | |
| Overall Height | A | – | – | 1.20 |
| Molded Package Thickness | A2 | 0.80 | 1.00 | 1.05 |
| Standoff | A1 | 0.05 | – | 0.15 |
| Overall Width | E | 6.40 BSC | | |
| Molded Package Width | E1 | 4.30 | 4.40 | 4.50 |
| Molded Package Length | D | 2.90 | 3.00 | 3.10 |
| Foot Length | L | 0.45 | 0.60 | 0.75 |
| Footprint | L1 | 1.00 REF | | |
| Foot Angle | ϕ | 0° | – | 8° |
| Lead Thickness | c | 0.09 | – | 0.20 |
| Lead Width | b | 0.19 | – | 0.30 |

**Notes:**

1. Pin 1 visual index feature may vary, but must be located within the hatched area.
2. Dimensions D and E1 do not include mold flash or protrusions. Mold flash or protrusions shall not exceed 0.15 mm per side.
3. Dimensioning and tolerancing per ASME Y14.5M.

   BSC: Basic Dimension. Theoretically exact value shown without tolerances.
   REF: Reference Dimension, usually without tolerance, for information purposes only.

Microchip Technology Drawing C04-086B


© 2003-2013 Microchip Technology Inc.

8-Lead Plastic Thin Shrink Small Outline (ST) - 4.4 mm Body [TSSOP]

**Note:** For the most current package drawings, please see the Microchip Packaging Specification located at http://www.microchip.com/packaging

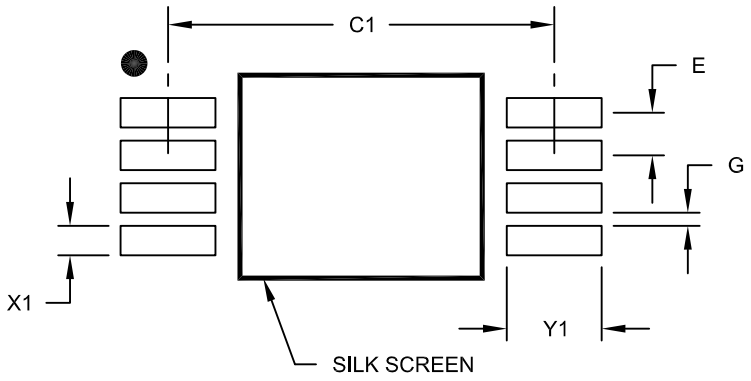


RECOMMENDED LAND PATTERN

| Units | | MILLIMETERS | | |
|---|---|---|---|---|
| Dimension Limits | | MIN | NOM | MAX |
| Contact Pitch | E | 0.65 BSC | | |
| Contact Pad Spacing | C1 | | 5.90 | |
| Contact Pad Width (X8) | X1 | | | 0.45 |
| Contact Pad Length (X8) | Y1 | | | 1.45 |
| Distance Between Pads | G | 0.20 | | |

Notes:

1. Dimensioning and tolerancing per ASME Y14.5M
   BSC: Basic Dimension. Theoretically exact value shown without tolerances.

Microchip Technology Drawing No. C04-2086A

## 8-Lead Plastic Dual Flat, No Lead Package (MN) – 2x3x0.75mm Body [TDFN]

**Note:** For the most current package drawings, please see the Microchip Packaging Specification located at http://www.microchip.com/packaging

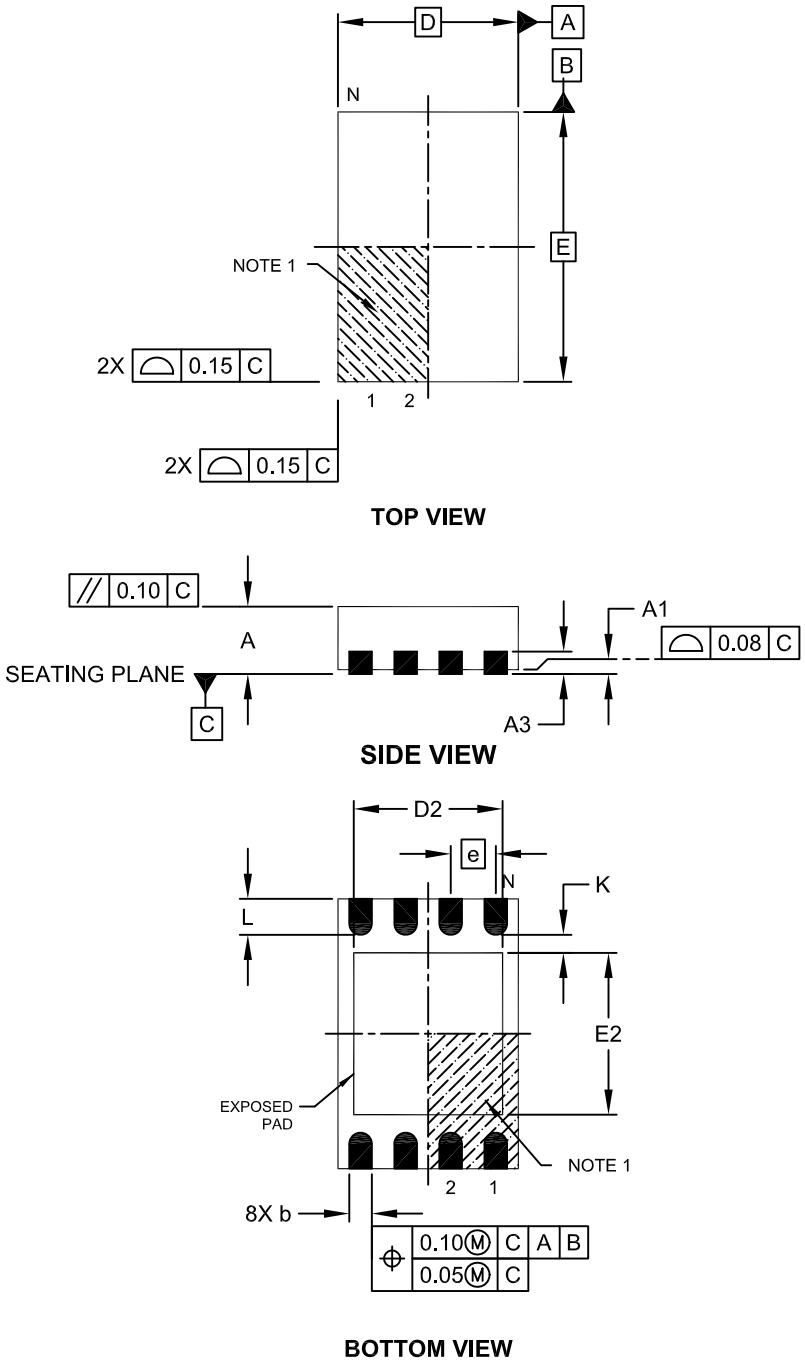


Microchip Technology Drawing No. C04-129C Sheet 1 of 2


© 2003-2013 Microchip Technology Inc.

## 8-Lead Plastic Dual Flat, No Lead Package (MN) – 2x3x0.75mm Body [TDFN]

**Note:** For the most current package drawings, please see the Microchip Packaging Specification located at http://www.microchip.com/packaging

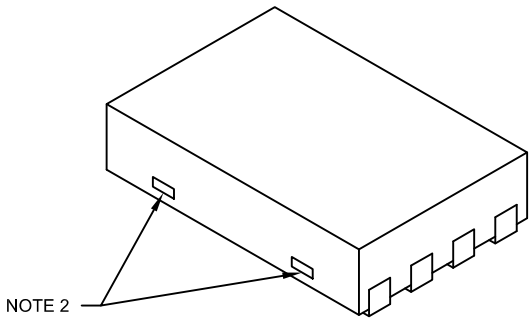


| Units | | MILLIMETERS | | |
|---|---|---|---|---|
| Dimension Limits | | MIN | NOM | MAX |
| Number of Pins | N | 8 | | |
| Pitch | e | 0.50 BSC | | |
| Overall Height | A | 0.70 | 0.75 | 0.80 |
| Standoff | A1 | 0.00 | 0.02 | 0.05 |
| Contact Thickness | A3 | 0.20 REF | | |
| Overall Length | D | 2.00 BSC | | |
| Overall Width | E | 3.00 BSC | | |
| Exposed Pad Length | D2 | 1.20 | - | 1.60 |
| Exposed Pad Width | E2 | 1.20 | - | 1.60 |
| Contact Width | b | 0.20 | 0.25 | 0.30 |
| Contact Length | L | 0.25 | 0.30 | 0.45 |
| Contact-to-Exposed Pad | K | 0.20 | - | - |

**Notes:**

1. Pin 1 visual index feature may vary, but must be located within the hatched area.
2. Package may have one or more exposed tie bars at ends.
3. Package is saw singulated
4. Dimensioning and tolerancing per ASME Y14.5M

   BSC: Basic Dimension. Theoretically exact value shown without tolerances.

   REF: Reference Dimension, usually without tolerance, for information purposes only.

Microchip Technology Drawing No. C04-129C Sheet 2 of 2

### 8-Lead Plastic Dual Flat, No Lead Package (MN) – 2x3x0.75 mm Body [TDFN]

**Note:** For the most current package drawings, please see the Microchip Packaging Specification located at http://www.microchip.com/packaging

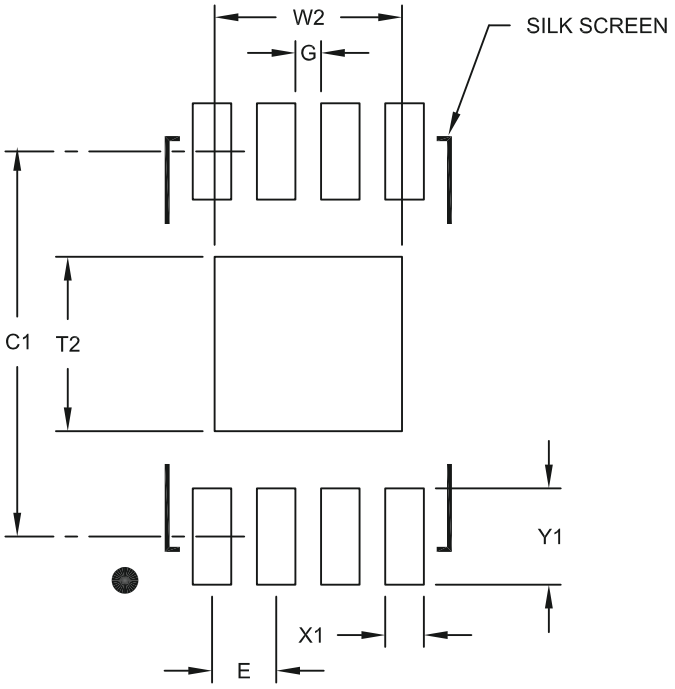


RECOMMENDED LAND PATTERN

| Units | | MILLIMETERS | | |
|---|---|---|---|---|
| Dimension Limits | | MIN | NOM | MAX |
| Contact Pitch | E | | 0.50 BSC | |
| Optional Center Pad Width | W2 | | | 1.46 |
| Optional Center Pad Length | T2 | | | 1.36 |
| Contact Pad Spacing | C1 | | 3.00 | |
| Contact Pad Width (X8) | X1 | | | 0.30 |
| Contact Pad Length (X8) | Y1 | | | 0.75 |
| Distance Between Pads | G | 0.20 | | |

Notes:

1. Dimensioning and tolerancing per ASME Y14.5M
   BSC: Basic Dimension. Theoretically exact value shown without tolerances.

Microchip Technology Drawing No. C04-2129A


© 2003-2013 Microchip Technology Inc.

## APPENDIX A: REVISION HISTORY

### Revision A (9/2003)

Initial Release.

### Revision B (12/2003)

Corrections to Section 1.0, Electrical Characteristics.

### Revision C (9/2007)

Features and Description, removed reference to Pb-free packages; Revise Table 1-2: AC Characteristics, parameters 7 and 8; Updated Packing Information/ Package Drawings; Add DFN Package; Removed trademark from SPI.

### Revision D (10/2008)

Added TDFN Package; Updated Package Drawings.

### Revision E (02/2012)

Add text to Section 2.5.

### Revision F (01/2013)

Revise Automotive E-temp; Revise Table 1-2, Param. No. 21; Update Package Info.

**NOTES:**


© 2003-2013 Microchip Technology Inc.

## THE MICROCHIP WEB SITE

Microchip provides online support via our WWW site at www.microchip.com. This web site is used as a means to make files and information easily available to customers. Accessible by using your favorite Internet browser, the web site contains the following information:

- **Product Support** – Data sheets and errata, application notes and sample programs, design resources, user's guides and hardware support documents, latest software releases and archived software
- **General Technical Support** – Frequently Asked Questions (FAQ), technical support requests, online discussion groups, Microchip consultant program member listing
- **Business of Microchip** – Product selector and ordering guides, latest Microchip press releases, listing of seminars and events, listings of Microchip sales offices, distributors and factory representatives

## CUSTOMER CHANGE NOTIFICATION SERVICE

Microchip's customer notification service helps keep customers current on Microchip products. Subscribers will receive e-mail notification whenever there are changes, updates, revisions or errata related to a specified product family or development tool of interest.

To register, access the Microchip web site at www.microchip.com. Under "Support", click on "Customer Change Notification" and follow the registration instructions.

## CUSTOMER SUPPORT

Users of Microchip products can receive assistance through several channels:

- Distributor or Representative
- Local Sales Office
- Field Application Engineer (FAE)
- Technical Support
- Development Systems Information Line

Customers should contact their distributor, representative or field application engineer (FAE) for support. Local sales offices are also available to help customers. A listing of sales offices and locations is included in the back of this document.

**Technical support is available through the web site at: http://microchip.com/support**

## READER RESPONSE

It is our intention to provide you with the best documentation possible to ensure successful use of your Microchip product. If you wish to provide your comments on organization, clarity, subject matter, and ways in which our documentation can better serve you, please FAX your comments to the Technical Publications Manager at (480) 792-4150.

Please list the following information, and use this outline to provide us with your comments about this document.

TO: Technical Publications Manager

RE: Reader Response

Total Pages Sent _____

From: Name _____

Company _____

Address _____

City / State / ZIP / Country _____

Telephone: (_____) _____ - _____ FAX: (_____) _____ - _____

Application (optional):

Would you like a reply? ___Y ___N

Device: 25AA640A/25LC640A Literature Number: DS21830F

Questions:

1. What are the best features of this document?

_____

_____

2. How does this document meet your hardware and software development needs?

_____

_____

3. Do you find the organization of this document easy to follow? If not, why?

_____

_____

4. What additions to the document do you think would enhance the structure and subject?

_____

_____

5. What deletions from the document could be made without affecting the overall usefulness?

_____

_____

6. Is there any incorrect or misleading information (what and where)?

_____

_____

7. How would you improve this document?

_____

_____


© 2003-2013 Microchip Technology Inc.

## PRODUCT IDENTIFICATION SYSTEM

To order or obtain information, e.g., on pricing or delivery, refer to the factory or the listed sales office.

| PART NO. | X | – | X | /XX |
|---|---|---|---|---|
| Device | Tape & Reel | | Temp Range | Package |

| | | | |
|---|---|---|---|
| **Device:** | 25AA640A | = | 64k-bit, 1.8V, SPI Serial EEPROM |
| | 25LC640A | = | 64k-bit, 2.5V, SPI Serial EEPROM |
| | 25AA640AX | = | 64k-bit, 1.8V, SPI Serial EEPROM in alternate pinout (ST only) |
| | 25LC640AX | = | 64k-bit, 2.5V, SPI Serial EEPROM in alternate pinout (ST only) |
| **Tape & Reel:** | Blank | = | Standard packaging |
| | T | = | Tape & Reel |
| **Temperature Range:** | I | = | -40°C to+85°C |
| | E | = | -40°C to+125°C |
| **Package:** | MS | = | Plastic MSOP (Micro Small Outline), 8-lead |
| | P | = | Plastic DIP (300 mil body), 8-lead |
| | SN | = | Plastic SOIC (3.90 mm body), 8-lead |
| | ST | = | TSSOP (4.4 mm body), 8-lead |
| | MF | = | DFN (5x6), 8-lead |
| | MNY(1) | = | TDFN (2x3), 8-lead |

**Note 1:** "Y" indicates a Nickel Palladium Gold (NiPdAu) finish.

**Examples:**

a) 25AA640A-I/MS = 64 kbit, 1.8V Serial EEPROM, Industrial temp., MSOP package

b) 25AA640AT-I/SN = 64 kbit, 1.8V Serial EEPROM, Industrial temp., Tape & Reel, SOIC package

c) 25LC640AT-E/SN = 64 kbit, 2.5V Serial EEPROM, Extended temp., Tape & Reel, SOIC package

d) 25LC640AT-I/ST = 64 kbit, 2.5V Serial EEPROM, Industrial temp., Tape & Reel, TSSOP package

e) 25LC640AXT-I/ST = 64 kbit, 2.5V Serial EEPROM, Industrial temp., Tape & Reel, Rotated pinout, TSSOP package

f) 25AA640AT-E/SN = 64 kbit, 1.8V Serial EEPROM, Extended temp., Tape & Reel, SOIC package

**NOTES:**


© 2003-2013 Microchip Technology Inc.

**Note the following details of the code protection feature on Microchip devices:**

- Microchip products meet the specification contained in their particular Microchip Data Sheet.
- Microchip believes that its family of products is one of the most secure families of its kind on the market today, when used in the intended manner and under normal conditions.
- There are dishonest and possibly illegal methods used to breach the code protection feature. All of these methods, to our knowledge, require using the Microchip products in a manner outside the operating specifications contained in Microchip's Data Sheets. Most likely, the person doing so is engaged in theft of intellectual property.
- Microchip is willing to work with the customer who is concerned about the integrity of their code.
- Neither Microchip nor any other semiconductor manufacturer can guarantee the security of their code. Code protection does not mean that we are guaranteeing the product as "unbreakable."

Code protection is constantly evolving. We at Microchip are committed to continuously improving the code protection features of our products. Attempts to break Microchip's code protection feature may be a violation of the Digital Millennium Copyright Act. If such acts allow unauthorized access to your software or other copyrighted work, you may have a right to sue for relief under that Act.

Information contained in this publication regarding device applications and the like is provided only for your convenience and may be superseded by updates. It is your responsibility to ensure that your application meets with your specifications. MICROCHIP MAKES NO REPRESENTATIONS OR WARRANTIES OF ANY KIND WHETHER EXPRESS OR IMPLIED, WRITTEN OR ORAL, STATUTORY OR OTHERWISE, RELATED TO THE INFORMATION, INCLUDING BUT NOT LIMITED TO ITS CONDITION, QUALITY, PERFORMANCE, MERCHANTABILITY OR FITNESS FOR PURPOSE**.** Microchip disclaims all liability arising from this information and its use. Use of Microchip devices in life support and/or safety applications is entirely at the buyer's risk, and the buyer agrees to defend, indemnify and hold harmless Microchip from any and all damages, claims, suits, or expenses resulting from such use. No licenses are conveyed, implicitly or otherwise, under any Microchip intellectual property rights.

**QUALITY MANAGEMENT SYSTEM**
**CERTIFIED BY DNV**
**═ ISO/TS 16949 ═**

**Trademarks**

The Microchip name and logo, the Microchip logo, dsPIC, FlashFlex, KEELOQ, KEELOQ logo, MPLAB, PIC, PICmicro, PICSTART, PIC$^{32}$ logo, rfPIC, SST, SST Logo, SuperFlash and UNI/O are registered trademarks of Microchip Technology Incorporated in the U.S.A. and other countries.

FilterLab, Hampshire, HI-TECH C, Linear Active Thermistor, MTP, SEEVAL and The Embedded Control Solutions Company are registered trademarks of Microchip Technology Incorporated in the U.S.A.

Silicon Storage Technology is a registered trademark of Microchip Technology Inc. in other countries.

Analog-for-the-Digital Age, Application Maestro, BodyCom, chipKIT, chipKIT logo, CodeGuard, dsPICDEM, dsPICDEM.net, dsPICworks, dsSPEAK, ECAN, ECONOMONITOR, FanSense, HI-TIDE, In-Circuit Serial Programming, ICSP, Mindi, MiWi, MPASM, MPF, MPLAB Certified logo, MPLIB, MPLINK, mTouch, Omniscient Code Generation, PICC, PICC-18, PICDEM, PICDEM.net, PICkit, PICtail, REAL ICE, rfLAB, Select Mode, SQI, Serial Quad I/O, Total Endurance, TSHARC, UniWinDriver, WiperLock, ZENA and Z-Scale are trademarks of Microchip Technology Incorporated in the U.S.A. and other countries.

SQTP is a service mark of Microchip Technology Incorporated in the U.S.A.

GestIC and ULPP are registered trademarks of Microchip Technology Germany II GmbH & Co. & KG, a subsidiary of Microchip Technology Inc., in other countries.

All other trademarks mentioned herein are property of their respective companies.

© 2003-2013, Microchip Technology Incorporated, Printed in the U.S.A., All Rights Reserved.

Printed on recycled paper.

ISBN: 9781620768549

*Microchip received ISO/TS-16949:2009 certification for its worldwide headquarters, design and wafer fabrication facilities in Chandler and Tempe, Arizona; Gresham, Oregon and design centers in California and India. The Company's quality system processes and procedures are for its PIC® MCUs and dsPIC® DSCs, KEELOQ® code hopping devices, Serial EEPROMs, microperipherals, nonvolatile memory and analog products. In addition, Microchip's quality system for the design and manufacture of development systems is ISO 9001:2000 certified.*

# Worldwide Sales and Service

## AMERICAS

**Corporate Office**
2355 West Chandler Blvd.
Chandler, AZ 85224-6199
Tel: 480-792-7200
Fax: 480-792-7277
Technical Support:
http://www.microchip.com/support
Web Address:
www.microchip.com

**Atlanta**
Duluth, GA
Tel: 678-957-9614
Fax: 678-957-1455

**Boston**
Westborough, MA
Tel: 774-760-0087
Fax: 774-760-0088

**Chicago**
Itasca, IL
Tel: 630-285-0071
Fax: 630-285-0075

**Cleveland**
Independence, OH
Tel: 216-447-0464
Fax: 216-447-0643

**Dallas**
Addison, TX
Tel: 972-818-7423
Fax: 972-818-2924

**Detroit**
Farmington Hills, MI
Tel: 248-538-2250
Fax: 248-538-2260

**Indianapolis**
Noblesville, IN
Tel: 317-773-8323
Fax: 317-773-5453

**Los Angeles**
Mission Viejo, CA
Tel: 949-462-9523
Fax: 949-462-9608

**Santa Clara**
Santa Clara, CA
Tel: 408-961-6444
Fax: 408-961-6445

**Toronto**
Mississauga, Ontario, Canada
Tel: 905-673-0699
Fax: 905-673-6509

## ASIA/PACIFIC

**Asia Pacific Office**
Suites 3707-14, 37th Floor
Tower 6, The Gateway
Harbour City, Kowloon
Hong Kong
Tel: 852-2401-1200
Fax: 852-2401-3431

**Australia - Sydney**
Tel: 61-2-9868-6733
Fax: 61-2-9868-6755

**China - Beijing**
Tel: 86-10-8569-7000
Fax: 86-10-8528-2104

**China - Chengdu**
Tel: 86-28-8665-5511
Fax: 86-28-8665-7889

**China - Chongqing**
Tel: 86-23-8980-9588
Fax: 86-23-8980-9500

**China - Hangzhou**
Tel: 86-571-2819-3187
Fax: 86-571-2819-3189

**China - Hong Kong SAR**
Tel: 852-2943-5100
Fax: 852-2401-3431

**China - Nanjing**
Tel: 86-25-8473-2460
Fax: 86-25-8473-2470

**China - Qingdao**
Tel: 86-532-8502-7355
Fax: 86-532-8502-7205

**China - Shanghai**
Tel: 86-21-5407-5533
Fax: 86-21-5407-5066

**China - Shenyang**
Tel: 86-24-2334-2829
Fax: 86-24-2334-2393

**China - Shenzhen**
Tel: 86-755-8864-2200
Fax: 86-755-8203-1760

**China - Wuhan**
Tel: 86-27-5980-5300
Fax: 86-27-5980-5118

**China - Xian**
Tel: 86-29-8833-7252
Fax: 86-29-8833-7256

**China - Xiamen**
Tel: 86-592-2388138
Fax: 86-592-2388130

**China - Zhuhai**
Tel: 86-756-3210040
Fax: 86-756-3210049

## ASIA/PACIFIC

**India - Bangalore**
Tel: 91-80-3090-4444
Fax: 91-80-3090-4123

**India - New Delhi**
Tel: 91-11-4160-8631
Fax: 91-11-4160-8632

**India - Pune**
Tel: 91-20-2566-1512
Fax: 91-20-2566-1513

**Japan - Osaka**
Tel: 81-6-6152-7160
Fax: 81-6-6152-9310

**Japan - Tokyo**
Tel: 81-3-6880- 3770
Fax: 81-3-6880-3771

**Korea - Daegu**
Tel: 82-53-744-4301
Fax: 82-53-744-4302

**Korea - Seoul**
Tel: 82-2-554-7200
Fax: 82-2-558-5932 or
82-2-558-5934

**Malaysia - Kuala Lumpur**
Tel: 60-3-6201-9857
Fax: 60-3-6201-9859

**Malaysia - Penang**
Tel: 60-4-227-8870
Fax: 60-4-227-4068

**Philippines - Manila**
Tel: 63-2-634-9065
Fax: 63-2-634-9069

**Singapore**
Tel: 65-6334-8870
Fax: 65-6334-8850

**Taiwan - Hsin Chu**
Tel: 886-3-5778-366
Fax: 886-3-5770-955

**Taiwan - Kaohsiung**
Tel: 886-7-213-7828
Fax: 886-7-330-9305

**Taiwan - Taipei**
Tel: 886-2-2508-8600
Fax: 886-2-2508-0102

**Thailand - Bangkok**
Tel: 66-2-694-1351
Fax: 66-2-694-1350

## EUROPE

**Austria - Wels**
Tel: 43-7242-2244-39
Fax: 43-7242-2244-393

**Denmark - Copenhagen**
Tel: 45-4450-2828
Fax: 45-4485-2829

**France - Paris**
Tel: 33-1-69-53-63-20
Fax: 33-1-69-30-90-79

**Germany - Munich**
Tel: 49-89-627-144-0
Fax: 49-89-627-144-44

**Italy - Milan**
Tel: 39-0331-742611
Fax: 39-0331-466781

**Netherlands - Drunen**
Tel: 31-416-690399
Fax: 31-416-690340

**Spain - Madrid**
Tel: 34-91-708-08-90
Fax: 34-91-708-08-91

**UK - Wokingham**
Tel: 44-118-921-5869
Fax: 44-118-921-5820

11/29/12


© 2003-2013 Microchip Technology Inc.

Мы молодая и активно развивающаяся компания в области поставок электронных компонентов. Мы поставляем электронные компоненты отечественного и импортного производства напрямую от производителей и с крупнейших складов мира.

Благодаря сотрудничеству с мировыми поставщиками мы осуществляем комплексные и плановые поставки широчайшего спектра электронных компонентов.

Собственная эффективная логистика и склад в обеспечивает надежную поставку продукции в точно указанные сроки по всей России.

Мы осуществляем техническую поддержку нашим клиентам и предпродажную проверку качества продукции. На все поставляемые продукты мы предоставляем гарантию .

Осуществляем поставки продукции под контролем ВП МО РФ на предприятия военно-промышленного комплекса России , а также работаем в рамках 275 ФЗ с открытием отдельных счетов в уполномоченном банке. Система менеджмента качества компании соответствует требованиям ГОСТ ISO 9001.

Минимальные сроки поставки, гибкие цены, неограниченный ассортимент и индивидуальный подход к клиентам являются основой для выстраивания долгосрочного и эффективного сотрудничества с предприятиями радиоэлектронной промышленности, предприятиями ВПК и научно-исследовательскими институтами России.

С нами вы становитесь еще успешнее!

**Наши контакты:**

**Телефон:** +7 812 627 14 35

**Электронная почта:** sales@st-electron.ru

**Адрес:** 198099, Санкт-Петербург, Промышленная ул, дом № 19, литера Н, помещение 100-Н Офис 331